IEEE Guide for Protective Relay Applications to Transmission Lines

Sponsor
Power Systems Relaying Committee (PSRC)
of the
IEEE Power Engineering Society

Reaffirmed 8 December 2004
Approved 16 September 1999
IEEE-SA Standards Board

Abstract: This newly developed guide compiles information on the application considerations of protective relays to ac transmission lines. The guide describes accepted transmission line protection schemes and the different electrical system parameters and situations that affect their application. Its purpose is to provide a reference for the selection of relay schemes and to assist less experienced protective relaying engineers in their application.
Keywords: protective relaying, relay application, relaying, transmission line protection

The Institute of Electrical and Electronics Engineers, Inc.
3 Park Avenue, New York, NY 10016-5997, USA
Copyright © 2000 by the Institute of Electrical and Electronics Enigneers, Inc.
All rights reserved. Published 29 February 2000. Printed in the United States of America.
Print: ISBN 0-7381-1831-1 SH94798
PDF: ISBN 0-7381-1832-X SS94798
No part of this publication may be reproduced in any form, in an electronic retrieval system or otherwise, without the prior written permission of the publisher.

Copyright The Institute of Electrical and Electronics Engineers, Inc.
Provided by IHS under license with IEEE
No reproduction or networking permitted without license from IHS
Not for Resale

IEEE Standards documents are developed within the IEEE Societies and the Standards Coordinating Committees of the IEEE Standards Association (IEEE-SA) Standards Board. Members of the committees serve voluntarily and without compensation. They are not necessarily members of the Institute. The standards developed within IEEE represent a consensus of the broad expertise on the subject within the Institute as well as those activities outside of IEEE that have expressed an interest in participating in the development of the standard.

Use of an IEEE Standard is wholly voluntary. The existence of an IEEE Standard does not imply that there are no other ways to produce, test, measure, purchase, market, or provide other goods and services related to the scope of the IEEE Standard. Furthermore, the viewpoint expressed at the time a standard is approved and issued is subject to change brought about through developments in the state of the art and comments received from users of the standard. Every IEEE Standard is subjected to review at least every five years for revision or reaffirmation. When a document is more than five years old and has not been reaffirmed, it is reasonable to conclude that its contents, although still of some value, do not wholly reflect the present state of the art. Users are cautioned to check to determine that they have the latest edition of any IEEE Standard.

Comments for revision of IEEE Standards are welcome from any interested party, regardless of membership affiliation with IEEE. Suggestions for changes in documents should be in the form of a proposed change of text, together with appropriate supporting comments.

Interpretations: Occasionally questions may arise regarding the meaning of portions of standards as they relate to specific applications. When the need for interpretations is brought to the attention of IEEE, the Institute will initiate action to prepare appropriate responses. Since IEEE Standards represent a consensus of all concerned interests, it is important to ensure that any interpretation has also received the concurrence of a balance of interests. For this reason, IEEE and the members of its societies and Standards Coordinating Committees are not able to provide an instant response to interpretation requests except in those cases where the matter has previously received formal consideration.

Comments on standards and requests for interpretations should be addressed to:

Secretary, IEEE-SA Standards Board
445 Hoes Lane
P.O. Box 1331
Piscataway, NJ 08855-1331
USA

Note: Attention is called to the possibility that implementation of this standard may require use of subject matter covered by patent rights. By publication of this standard, no position is taken with respect to the existence or validity of any patent rights in connection therewith. The IEEE shall not be responsible for identifying patents for which a license may be required by an IEEE standard or for conducting inquiries into the legal validity or scope of those patents that are brought to its attention.

Authorization to photocopy portions of any individual standard for internal or personal use is granted by the Institute of Electrical and Electronics Engineers, Inc., provided that the appropriate fee is paid to Copyright Clearance Center. To arrange for payment of licensing fee, please contact Copyright Clearance Center, Customer Service, 222 Rosewood Drive, Danvers, MA 01923 USA; (978) 750-8400. Permission to photocopy portions of any individual standard for educational classroom use can also be obtained through the Copyright Clearance Center.

Copyright The Institute of Electrical and Electronics Engineers, Inc.
Provided by IHS under license with IEEE
No reproduction or networking permitted without license from IHS
Not for Resale

Introduction

(This introduction is not part of IEEE Std C37.113-1999, IEEE Guide for Protective Relay Applications to Transmission Lines.)

The art and science of the protective relaying of transmission lines has evolved over many years. This newly developed guide is an effort to compile information on the application considerations of protective relays to power transmission lines. The guide presents a review of generally accepted transmission line protection schemes. Its purpose is to describe various schemes used for different conditions and situations and to assist relay engineers in selecting the most appropriate scheme for a particular installation. It is intended for engineers who have a basic knowledge of power system protection. This is an application guide and does not cover all of the protective requirements of all transmission line configurations in every situation. Additional reading material is suggested so the reader can evaluate the protection for the individual application.

The working group on this guide has the following membership:

W. Mark Carpenter, *Chair*
Albert N. Darlington, *Vice-Chair*

George E. Alexander
Joe Andrichak
Alex P. Apostolov
Ken Behrendt
Gabriel Benmouyal
John Berger
John R. Boyle
Larry Budler
Pat Carroll
Stephen P. Conrad
Paul R. Drum
Walt A. Elmore
Kevin Friedrich
Jay Gosalia
Roger A. Hedding
Charles F. Henville
Stanley H. Horowitz
Barry Jackson
Clark A. Jacobson
Dave A. Jamison
Pierre R. Leblanc
Maurice J. Lefrancois
Rick Madge
Mike Meisinger
Gary L. Michel
Kalyan K. Mustaphi
Pratap G. Mysore
George R. Nail
Damir J. Novosel
George C. Parr
Miriam P. Sanders
Gerry L. Schmitt
Tony Seegers
Dilip Shroff
Tarlochan Sidhu
Farajollah Soudi
William M. Strang
Charles R. Sufana
Richard P. Taylor
Demetrios A. Tziouvaras
Jim E. Waldron
Brian Warwick
Ron M. Westfall
Tom E. Wiedman
Jerome B. Williams
Phil B. Winston
Karl Zimmerman
John A. Zipp

Copyright © 2000 IEEE. All rights reserved.

Copyright The Institute of Electrical and Electronics Engineers, Inc.
Provided by IHS under license with IEEE
No reproduction or networking permitted without license from IHS
Not for Resale

The following members of the balloting committee voted on this standard:

John Appleyard
Michael P. Baldwin
E. A. Baumgartner
Robert W. Beckwith
Miroslav Begovic
Gabriel Benmouyal
Stuart H. Bouchey
John Boyle
B. Bozoki
W. Mark Carpenter
Carlos H. Castro
Simon R. Chano
D. Mason Clark
Stephen P. Conrad
Carey J. Cook
Albert N. Darlington
Douglas C. Dawson
Robert W. Dempsey
Randall L. Dotson
Edward F. Dowling
Walt A. Elmore
Ahmed Elneweihi
H. G. Farley
Jonathan D. Gardell
Jeffrey G. Gilbert
Stephen E. Grier
Irwin O. Hasenwinkle
Edward M. Gulachenski
E. A. Guro
Luis C. Gonzalez
Robert W. Haas
Roger A. Hedding
Charles F. Henville
Jerry W. Hohn
Stanley H. Horowitz
John J. Horwath
James D. Huddleston, III
James W. Ingleson
K. J. Khunkhun
J. S. Komisarek
W. J. Marsh, Jr.
John R. Matras
J. E. McConnell
Michael J. McDonald
Jeffrey L. McElray
M. Meisinger
Gary L. Michel
George R. Nail
Bradley D. Nelson
George C. Parr
Robert D. Pettigrew
Alan C. Pierce
Frank Plumptre
Ramas Ramaswami
Mohindar S. Sachdev
Bob Ryan
John G. Reckleff
Roger E. Ray
Miriam P. Sanders
Tarlochan Sidhu
Mark S. Simon
Patrick Smith
Larry Smith
Peter A. Solanics
James E. Stephens
James E. Stoner
William M. Strang
Charles Sufana
Malcolm J. Swanson
Richard P. Taylor
John T. Tengdin
James S. Thorp
Demetrios A. Tziouvaras
Joe T. Uchiyama
Eric A. Udren
Charles L. Wagner
William P. Waudby
Ron M. Westfall
David J. Zaprazny
Karl Zimmerman
John A. Zipp
Stan Zocholl

When the IEEE-SA Standards Board approved this standard on 16 September 1999, it had the following membership:

Richard J. Holleman, *Chair*
Donald N. Heirman, *Vice Chair*
Judith Gorman, *Secretary*

Satish K. Aggarwal
Dennis Bodson
Mark D. Bowman
James T. Carlo
Gary R. Engmann
Harold E. Epstein
Jay Forster*
Ruben D. Garzon
James H. Gurney
Lowell G. Johnson
Robert J. Kennelly
E. G. "Al" Kiener
Joseph L. Koepfinger*
L. Bruce McClung
Daleep C. Mohla
Robert F. Munzner
Louis-François Pau
Ronald C. Petersen
Gerald H. Peterson
John B. Posey
Gary S. Robinson
Akio Tojo
Hans E. Weinrich
Donald W. Zipse

*Member Emeritus

Also included is the following nonvoting IEEE-SA Standards Board liaison:

Robert E. Hebner

Janet Rutigliano
IEEE Standards Project Editor

Copyright © 2000 IEEE. All rights reserved.
Copyright The Institute of Electrical and Electronics Engineers, Inc.
Provided by IHS under license with IEEE
No reproduction or networking permitted without license from IHS
Not for Resale

Contents

1. Overview 1

1.1 Scope 1

2. References 2

3. Fundamentals 2

3.1 Terms and definitions 2
3.2 Line relaying selection 10
3.3 Redundancy and backup considerations 14
3.4 Reclosing methods 14
3.5 Effects of load on line relay applications and settings 15

4. System configuration 16

4.1 Length considerations 16
4.2 Line design 19
4.3 Number of line terminals 19
4.4 Lines terminated into transformers 21
4.5 Weak electrical systems 22
4.6 Ground source configurations 24
4.7 Transmission lines with distribution substation taps 24
4.8 Lines with devices for var and flow control 28
4.9 Parallel lines 30
4.10 Lines with high-impedance ground returns 30
4.11 Terminal configuration considerations 31

5. Relay schemes 34

5.1 Non-pilot schemes 34
5.2 Pilot schemes 44
5.3 Special schemes 58
5.4 Directional ground overcurrent relay polarization 65
5.5 Problems associated with multiterminal lines 71
5.6 Application considerations of distance relays 75
5.7 Relay considerations for series compensated lines 86
5.8 Single-phase tripping 89
5.9 Application of distance relays to short lines 90
5.10 Relay considerations for system transients 93

Annex A (informative) Bibliography 97

Index 102

Copyright © 2000 IEEE. All rights reserved.

Copyright The Institute of Electrical and Electronics Engineers, Inc.
Provided by IHS under license with IEEE
No reproduction or networking permitted without license from IHS
Not for Resale

Copyright The Institute of Electrical and Electronics Engineers, Inc.
Provided by IHS under license with IEEE
No reproduction or networking permitted without license from IHS

Not for Resale

IEEE Guide for Protective Relay Applications to Transmission Lines

1. Overview

This guide presents a review of the generally accepted transmission line protection schemes. Its purpose is to present the concepts of line protection and to describe the typical means of implementing such concepts. It is intended for engineers who have a working knowledge of power system protection or who have a need to understand the fundamentals of the various schemes. The fundamentals and definitions describing the relay schemes are written in a way intended to be understood by both relay and non-relay engineers. The circuits and operating characteristics of the various schemes are critically examined so the reader can understand and evaluate the advantages and disadvantages of the specific applications and evaluate alternative relays and relaying packages. This is an application guide and does not cover all of the protective requirements of all transmission line configurations in every situation. Additional reading material is suggested so the reader can evaluate the required protection for each application.

1.1 Scope

The study of transmission line protection offers an opportunity to examine many fundamental relaying considerations that apply, in one degree or another, to the protection of other types of power system equipment. Each electrical element, of course, will have protection problems unique to itself; however, the concepts associated with transmission line protection are fundamental to all other electrical devices and provide an excellent starting point to examine and appreciate the implementation of all power system protection. The basic relaying characteristics of reliability, selectivity, local and remote backup, zones of protection, coordination, and speed are present in almost all relaying situations. This guide specifically addresses these concepts for transmission line protection, but the ideas are universally applicable. Since transmission lines are also the links to adjacent lines or connected equipment, the protection provided for transmission lines must be compatible with the protection provided for all of these other elements. This requires coordination of settings, operating times, and characteristics. Individual relays, such as overcurrent, directional, and distance, as well as the total protection package, including the communication channels, are all examined in this guide, with appropriate discussion relating to their application and their particular advantages and disadvantages. Special topics, such as the effects of series capacitors or static volt ampere reactive (var) systems and consideration for tripping versus blocking during system power swing conditions, are also discussed.

Copyright © 2000 IEEE. All rights reserved.

Copyright The Institute of Electrical and Electronics Engineers, Inc.
Provided by IHS under license with IEEE
No reproduction or networking permitted without license from IHS
Not for Resale

In addition to the protection of the line itself, consideration is given to the various system configurations and bus arrangements, mutually coupled lines, reclosing, and the impact that system performance and parameters have on the selection of relays and relay schemes. Special protection systems, multiterminal lines, and single-phase tripping are among the topics covered.

2. References

This guide shall be used in conjunction with the following publications. When the following standards are superseded by an approved revision, the revision shall apply.

IEEE Std 100 -1996, The IEEE Standard Dictionary of Electrical and Electronics Terms, Sixth Edition.[1]

IEEE Std C37.2-1996, IEEE Standard Electrical Power System Device Function Numbers and Contact Designations.

IEEE Std C37.90-1989 (Reaff 1994), IEEE Standard for Relays and Relay Systems Associated with Electric Power Apparatus.

IEEE Std C37.90.1-1989 (Reaff 1994), IEEE Standard Surge Withstand Capability (SWC) Tests for Protective Relays and Relay Systems.

IEEE Std C37.100-1992, IEEE Standard Definitions for Power Switchgear.

IEEE Std C37.109-1988 (Reaff 1999), IEEE Guide for the Protection of Shunt Reactors.

IEEE Std C37.110-1996, IEEE Guide for the Application of Current Transformers Used for Protective Relaying Purposes.

3. Fundamentals

3.1 Terms and definitions

For the purpose of this guide, the following terms and definitions apply. IEEE Std 100-1996 should be referenced for terms and definitions not defined in this subclause.

3.1.1 Transmission line

Terms such as transmission, subtransmission, and distribution lines have different connotations among different companies. Such issues as what constitutes a line terminal may also vary among companies. Clauses of this guide will address the many line configurations and the effect these configurations may have on the protection of these lines.

For purposes of protection, a “line” is defined by the location of the circuit breakers (or other sectionalizing devices) that serve to isolate the line from other parts of the system. The line includes the sections of bus, overhead conductor, underground cable, and other electrical apparatus (including line traps, series capacitors, shunt reactors, and autotransformers) that fall between these circuit breakers. In Figure 1, segments 1 to 2 and 3 to 4 are defined as lines. It would normally be assumed that two or more stations are involved or the circuit breakers are too far apart to allow interconnection of control cables and station ground mats.

[1]IEEE publications are available from the Institute of Electrical and Electronics Engineers, 445 Hoes Lane, P.O. Box 1331, Piscataway, NJ 08855-1331, USA (http://www.standards.ieee.org/).

Copyright © 2000 IEEE. All rights reserved.
Copyright The Institute of Electrical and Electronics Engineers, Inc.
Provided by IHS under license with IEEE
No reproduction or networking permitted without license from IHS
Not for Resale

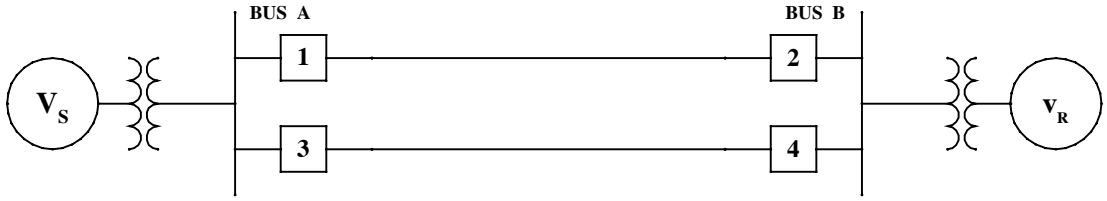

Figure 1—Definition of lines

3.1.2 Zone of protection

There are four basic types of protection zones, as shown in Figure 2. The four types are as follows:

a) Generator
b) Transformer
c) Bus
d) Lines

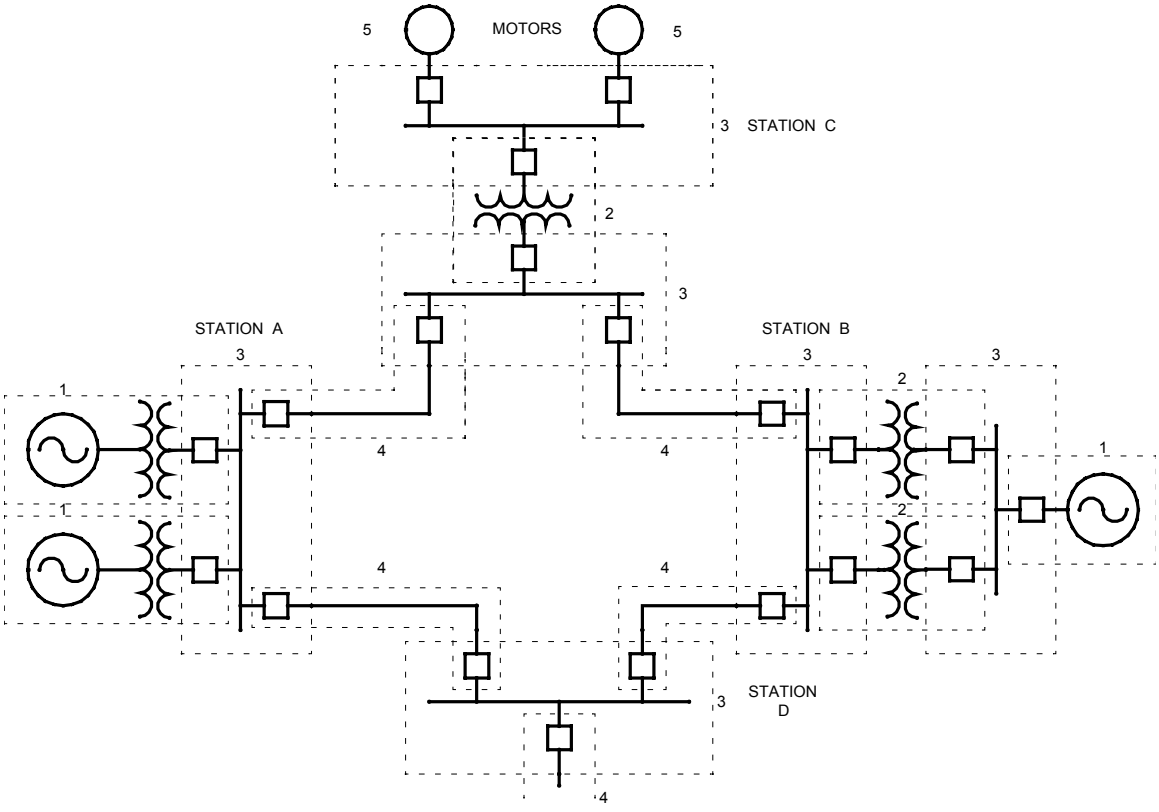

Figure 2—Typical system and its zones of protection

Copyright © 2000 IEEE. All rights reserved.

Copyright The Institute of Electrical and Electronics Engineers, Inc.
Provided by IHS under license with IEEE
No reproduction or networking permitted without license from IHS
Not for Resale

The boundaries of the zone of protection, as it applies to protective relays, are determined by the locations of the current transformers (CTs) that provide the representation of the line currents to the relays. Overlapping zones of protection is an established protection concept represented by Figure 3.

For pilot communication line protection schemes, the boundaries of the zone of protection are clearly defined. Many line protection practices, however, have unrestricted zones; the start of the zone is defined by the CT location, but the extent of the zone is determined by measurement of system quantities that may vary with generation and system configuration changes.

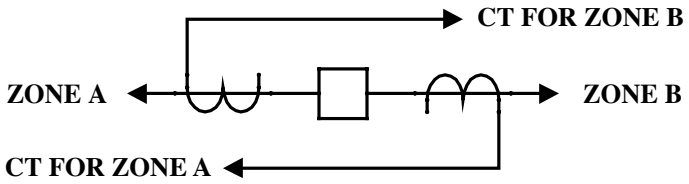

Figure 3—The principle of overlapping protection

3.1.3 Definitions

For the purposes of this standard, the following terms and definitions apply:

3.1.3.1 adaptive relay: A relay that can change its setting and/or relaying logic upon the occurrence of some external signal or event.

3.1.3.2 adaptive relaying: A protection philosophy that permits, and seeks to make adjustments automatically, in various protection functions to make them more attuned to prevailing power conditions.

3.1.3.3 apparent impedance: The impedance to a fault as seen by a distance relay is determined by the applied current and voltage. It may be different from the actual impedance because of current outfeed or current infeed at some point between the relay and the fault (see 5.5.1 and 5.5.2).

3.1.3.4 arc resistance: The impedance of an arc that is resistive by nature; it is a function of the current magnitude and arc length.

3.1.3.5 backup zone: The protected zone of a relay that is not the primary protection. It is usually time delayed (e.g., zones 2 and 3 of a distance relay). In addition, the backup zone will usually remove more of the system elements than required by the operation of the primary zone of protection.

3.1.3.6 blocking signal: A logic signal that is transmitted in a pilot scheme to prevent tripping.

3.1.3.7 breaker failure: The failure of a circuit breaker to operate or to interrupt a fault.

3.1.3.8 circuit switcher: A circuit interrupting device with a limited interrupting rating as compared with a circuit breaker. It is often integrated with a disconnecting switch. Its design usually precludes the integration of current transformers (CTs).

3.1.3.9 coordination of protection: The process of choosing settings or time delay characteristics of protective devices, such that operation of the devices will occur in a specified order to minimize customer service interruption and power system isolation due to a power system disturbance.

Copyright © 2000 IEEE. All rights reserved.
Copyright The Institute of Electrical and Electronics Engineers, Inc.
Provided by IHS under license with IEEE
No reproduction or networking permitted without license from IHS
Not for Resale

3.1.3.10 cross polarization (protective relaying): The polarization of a relay for directionality using some proportion of the voltage from a healthy (unfaulted) phase(s). One example of this is quadrature polarization. In this case, the polarizing voltage is in quadrature to the faulted phase voltage.

3.1.3.11 current differential relay: A relay designed to detect faults by measuring the current magnitude and phase angle difference between relay terminals of a transmission line.

3.1.3.12 distance relay: A protective relay in which the response to the input quantities is primarily a function of the electrical circuit distance between the relay location and the point of fault.

3.1.3.13 dual polarization: The polarization of a relay using current and voltage sources.

3.1.3.14 fault impedance: An impedance, resistive or reactive, between the faulted power system phase conductor(s) or ground.

3.1.3.15 grounding transformer: A transformer(s), delta-wye or zig-zag connected, installed to establish a system ground and thus provide a source of zero-sequence current for ground fault detection.

3.1.3.16 ground distance relay: A distance relay designed to detect phase-to-ground faults.

3.1.3.17 hybrid scheme: A relay scheme (usually a pilot scheme) combining the logic of two or more conventional schemes.

3.1.3.18 impedance relay: A distance relay in which the threshold value of operation depends only on the magnitude of the ratio of voltage to current applied to the relay, and is substantially independent of the phase angle between the applied voltage and current.

3.1.3.19 infeed: A source of fault current between a relay location and a fault location.

3.1.3.20 lenticular characteristic: A distance relay characteristic having a lens shape on a resistance-reactance (R-X) diagram.

3.1.3.21 mho unit: A distance relaying unit having a circular impedance tripping locus that passes through the origin on an R-X diagram

3.1.3.22 multiterminal: A transmission line with more than two terminals having a source of power.

3.1.3.23 outfeed: A current out of a terminal on a faulted line. Outfeed only occurs on multiterminal or series compensated lines.

3.1.3.24 overlapping protection: A situation in which the protected zone of one relay overlaps the protected zone of another relay (usually done to ensure protection of equipment at the border of a protected zone). This is often necessary due to the location of current transformers (CTs) on equipment.

3.1.3.25 permissive: Pertaining to a scheme requiring permission to trip from a remote terminal, usually in the form of a pilot signal.

3.1.3.26 phase comparison protection: A form of pilot protection that compares the relative phase angle position of specified currents at the terminals of a circuit.

3.1.3.27 phase distance relay: A distance relay designed to detect phase-to-phase and three-phase faults.

3.1.3.28 pilot communication scheme: A protection scheme involving relays at two or more substations that share data or logic status via a communication channel to improve tripping speed and/or coordination.

Copyright © 2000 IEEE. All rights reserved.

Copyright The Institute of Electrical and Electronics Engineers, Inc.
Provided by IHS under license with IEEE
No reproduction or networking permitted without license from IHS Not for Resale

3.1.3.29 primary zone: The part of a relay's protected zone where the relay operates with no intentional time delay.

3.1.3.30 quadrilateral characteristic: A distance relay characteristic on an R-X diagram created by a directional measurement, a reactance measurement, and two resistive measurements.

3.1.3.31 segregated phase comparison: Similar to phase comparison, except data on each phase and ground is sent separately to the remote terminal for comparison with the local phase data at that terminal.

3.1.3.32 self-checking (by a relay): Self-testing by microprocessor-based relays that checks operation of the processor software.

3.1.3.33 sequential tripping: A situation where one or more relay terminals of a line cannot detect an internal line fault, typically because of infeed, until one or more terminals has already opened and removed the infeed.

3.1.3.34 source impedance: The Thevenin equivalent impedance of an electrical system at the terminal of a transmission line. In network applications, this impedance can vary depending on the location of the fault on the transmission line and the status (i.e., opened or closed) of other terminals associated with the transmission line.

3.1.3.35 source of fault current: A terminal that contributes a significant amount of current to a fault on the protected line. Note that it is not necessary for generation to be connected to a terminal for it to be a source of fault current. For instance, large synchronous motor loads can contribute significant amounts of fault current for a few cycles within the duration of fault clearing. Transformers can also be a significant source of zero-sequence currents to unbalanced faults involving ground if they have winding with a grounded neutral connected to the line, and also have a delta or zig-zag winding.

3.1.3.36 source-to-line impedance ratio (SIR): The ratio of the source impedance behind a relay terminal to the line impedance.

3.1.3.37 step distance: A non-pilot distance relay scheme using multiple zones with time delay to differentiate between the zones.

3.1.3.38 swing: A transient power flow due to change in relative angles of generation on the system caused by a change in transmission or generation configuration.

3.1.3.39 switch onto fault protection: This provides tripping in the event that the breaker is closed into a zero voltage bolted fault, such as occurs if the grounding chains were left on the line following maintenance (also called line pickup protection).

3.1.3.40 transfer trip: The sending of a TRIP signal via a communication channel to a remote line terminal.

3.1.3.41 unblocking: Logic that will allow a permissive pilot scheme to trip for an internal fault within a time window, even though the pilot TRIP signal is not present when the signal is lost due to the fault.

3.1.3.42 untransposed: Refers to the physical positions of the phase conductors of a transmission line, which are not interchanged periodically to balance the mutual impedances between phases.

Copyright © 2000 IEEE. All rights reserved.
Copyright The Institute of Electrical and Electronics Engineers, Inc.
Provided by IHS under license with IEEE
No reproduction or networking permitted without license from IHS
Not for Resale

3.1.4 Acronyms and abbreviations

AT	audio tones (pilot-wire)
BCG	phase B to phase C to ground fault
CCVT	capacitance coupled voltage transformer
CT	current transformer
CVT	capacitance voltage transformer
DUTT	direct underreaching transfer trip
EHV	extra high voltage
FO	fiber optic
FSK	frequency shift keying
GIC	geomagnetically induced currents
IOC	instantaneous overcurrent
LOP	loss of potential
MOV	metal oxide varistor
MW	microwave
OS	out-of-step
PLC	power line carrier
POTT	permissive overreaching transfer trip
PUTT	permissive underreaching transfer trip
PW	pilot-wire
R	point-to-point radio
RO	overreaching
RU	underreaching
R-X	resistance-reactance
SIR	source-to-line impedance ratio
SVC	static var compensator
TOC	time overcurrent
UHV	ultra high voltage
var	volt ampere reactive
VT	voltage transformer

Copyright © 2000 IEEE. All rights reserved.

Copyright The Institute of Electrical and Electronics Engineers, Inc.
Provided by IHS under license with IEEE
No reproduction or networking permitted without license from IHS
Not for Resale

3.1.5 Symbols

Symbols used in this document and their meanings are shown in Figure 4.

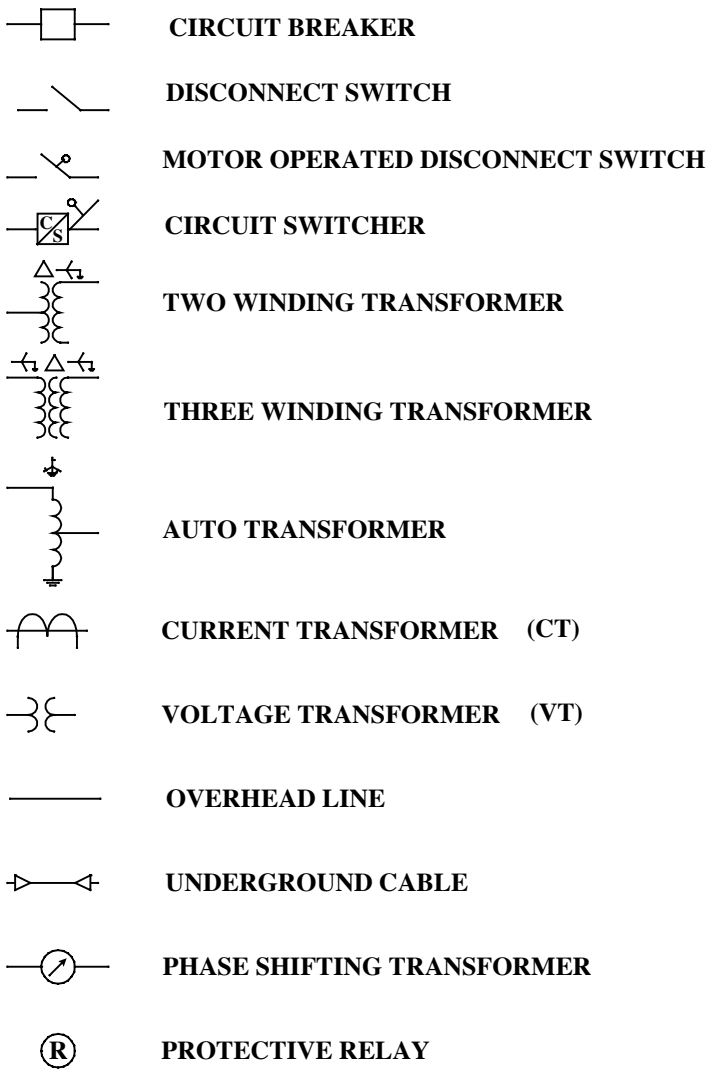

Figure 4—Symbols

3.1.6 Graphical representation methods

There are many ways to represent electrical systems and the applied protection. These include three-line ac diagrams; one-line diagrams; one-line diagrams with CTs, voltage transformers (VTs), protection, and other related equipment superimposed; dc and ac schematics; relay functional diagrams; and dc elementary diagrams.

Copyright © 2000 IEEE. All rights reserved.
Copyright The Institute of Electrical and Electronics Engineers, Inc.
Provided by IHS under license with IEEE
No reproduction or networking permitted without license from IHS
Not for Resale

In Figure 5, the connections of protective relays are shown in their broadest level (minimum detail) in a one-line diagram. The relays are represented as circles labeled “R” (for relay), connected by single lines to current and VTs. Connections shown as single lines are actually three-phase circuits. This type of single-line diagram is useful for understanding the various zones of protection. One of the relays shown in Figure 5 is labeled “21,” which indicates the type of protection this device provides. Function numbers are given in IEEE Std C37.2-1996.

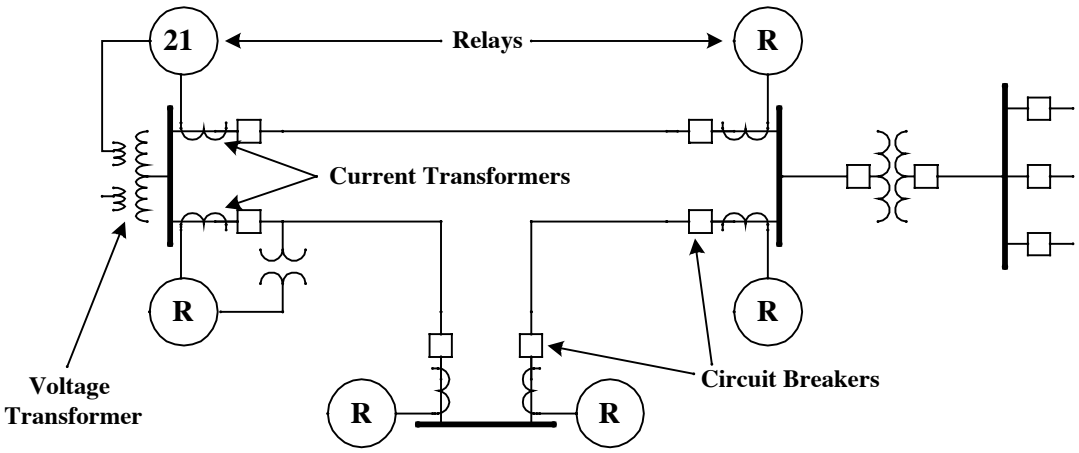

Figure 5—One line diagram

More detailed methods of showing relay connections, such as three-line schematics, dc schematics, and wiring diagrams, are not discussed in this guide.

In addition, protection characteristics can be shown on time-current diagrams, R-X diagrams, and one-line diagrams with zones or time characteristics overlaying the lines. Figure 6 shows one method of representing protective relay characteristics. This particular characteristic is the current versus time characteristic of a time overcurrent relay. The characteristic shows two regions: one in which the relay operates, and the other in which the relay does not operate. The line separating the regions is the characteristic curve of the relay.

Figure 7 shows another method of representing relay operating characteristics using an R-X diagram. Again, the characteristic separates two regions.

--`,,`,,,-`-`,,`,,`,`,,`---

Copyright © 2000 IEEE. All rights reserved.

Copyright The Institute of Electrical and Electronics Engineers, Inc.
Provided by IHS under license with IEEE
No reproduction or networking permitted without license from IHS
Not for Resale

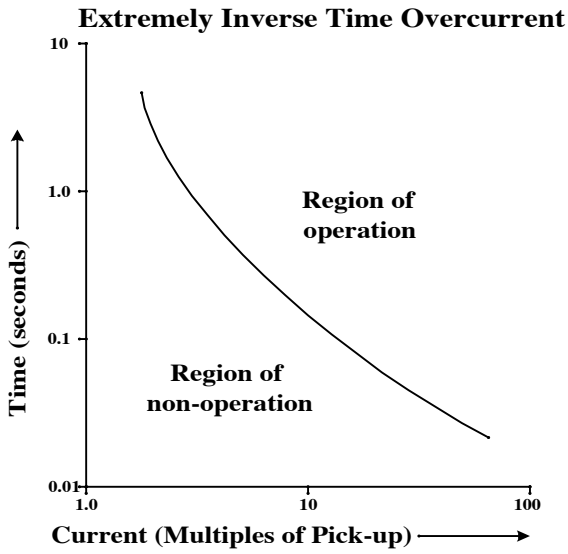

Figure 6—Extremely inverse time overcurrent characteristic

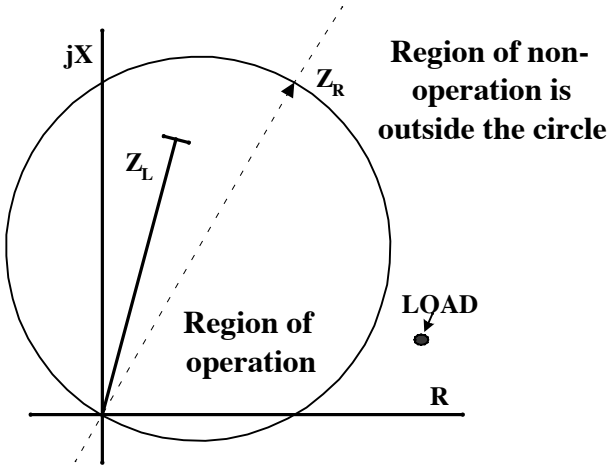

Figure 7—R-X diagram

3.2 Line relaying selection

The selection of line protection requires the consideration of several factors, some of which are mutually exclusive. Knowledge of the most probable failures, recommendations of equipment suppliers, and good practical judgment can assist the protection engineer in determining which of the factors deserve the most emphasis.

Copyright © 2000 IEEE. All rights reserved.
Copyright The Institute of Electrical and Electronics Engineers, Inc.
Provided by IHS under license with IEEE
No reproduction or networking permitted without license from IHS
Not for Resale

One of the most important design considerations of relaying is reliability. Relaying reliability is separated into two aspects: dependability and security. Dependability is defined as “the degree of certainty that a relay or relay system will operate correctly.” Security is defined as “the degree of certainty that a relay or relay system will not operate incorrectly.” In other words, dependability is a measure of the relay’s ability to operate when it is supposed to operate. Security is a measure of the relay’s ability to avoid operation for all other conditions for which tripping is not desired.

Dependability is relatively easy to obtain in relay design or in the application of a number of relays. Testing using operating conditions, fail-safe designs, and redundancy are methods to ensure dependability. Security is harder to attain; an almost infinite variety of tests would be needed to simulate all possible conditions to which a relay may be exposed.

Various engineering practices can enhance dependability. These include independence of design, different operating principles, redundancy within the relay systems, local backup methods, remote backup methods, and application of relays and relay systems that cause undesirable trips upon failure. Security can be enhanced by using relays that fail into a “disarmed” mode, series connected protection, improved monitoring and self-checking, and emphasis on high-quality components.

Another important design consideration is protection selectivity or coordination. Selectivity is the ability of relays and relaying systems to cooperate with each other to minimize the outaged area resulting from a fault. Coordination refers to the process of applying relays to operate as fast as possible for conditions with their primary zone, but to have delayed, or coordinated operations for conditions within an extended backup zone. Selectivity and coordination must be achieved to ensure maximum service continuity.

Fault clearing time is an important consideration in the selection of line relaying. Requirements for relaying speed must be carefully determined. If the relaying is too slow, system instability, excessive equipment damage, and adverse effects on customer service may result. However, faster protection tends to compromise relay system security and selectivity. There is a limit to the speed with which a relay can correctly respond due to the transients present in the power system itself (see 5.10).

Sensitivity of protection refers to the minimum operating quantities that must be available for the relays to detect an abnormal condition. While this factor is still important, most modern relays are using solid state or microprocessor technologies that are many times more sensitive than their electromechanical predecessors. Certain problems, such as high-impedance ground faults, inherent system voltage unbalances, and high source-to-line impedance ratios (SIRs) still challenge the sensitivity of relays and should be considered in relay selection.

The line protection design may often fail to recognize one of the more important design factors—simplicity. The multifunction and programmable capabilities of modern relays have created an abundance of special solutions to possible system problems. The implementation of these solutions challenges the application engineer, those responsible for setting the relays, and operations and maintenance personnel. The problems caused by incorrect or incomplete implementation of overly complex protection may create more serious consequences than not providing special solutions. The protection engineer should carefully weigh the consequences and probability of each problem to determine if it justifies using complex special solutions.

Economic evaluations of protection options will continue to be necessary. Protection engineers have long pointed to the relatively low cost and high importance of relays compared with the equipment they protect. However, it is fundamental to attempt to achieve the required protection at the lowest cost. In recent years, more importance has been placed on economic analysis that considers more than just the lowest initial cost. Installation and maintenance costs, as well as the cost of unreliable protection, are sometimes considered. In addition, modern protection usually offers many features not previously available that may result in improvements in operations, restoration of the system, and post-fault analysis. The value of these improvements should be considered in a complete economic evaluation of alternatives.

--`,,`,,,,-`-`,,`,,`,`,,`---
Copyright © 2000 IEEE. All rights reserved.

Copyright The Institute of Electrical and Electronics Engineers, Inc.
Provided by IHS under license with IEEE
No reproduction or networking permitted without license from IHS
Not for Resale

Certain transmission system configurations and characteristics require protective relaying with communication systems to provide high-speed clearing for all faults within the zone of protection. Pilot relaying schemes are employed to provide this high-speed fault clearing. These pilot relaying systems require the transmission of information during a fault between relays that are located in different substations to determine if the fault is internal or external to the zone of protection. This is accomplished using several different methods, ranging from direct hardwire communications to fiber optic communications systems (see 4.1). Different protection schemes and communication channels have different degrees of reliability. Knowledge of these different communication options is necessary to determine the reliability of the protection scheme being considered. The network configuration and local system loading requirements may also affect the type of pilot protection scheme chosen.

The protection scheme required will often dictate the type of relaying communications that will be used. On the other hand, the relaying communications may limit the types of relay schemes that can be used. Obviously, the requirements of the relaying scheme must be considered, along with the types of communications available.

3.2.1 Line relaying selection influences

The “proper” relaying for a given application can be influenced by a number of factors, some of which are described in 3.2.2 through 3.2.9.

3.2.2 “Criticality” of the line

One of the more significant determinants in transmission line protection is the criticality of the line to the system. This determination will define such considerations as the desired level of reliability and the role cost will play in the design. A system’s most critical lines may justify redundancy in protection, communication, and perhaps even dc auxiliary supply. Less critical lines may be adequately protected with step distance or overcurrent systems.

The determination of criticality could be based on voltage level, line length, proximity to generation sources, load flows, stability studies, customer service considerations, or other factors.

3.2.3 Other line or system factors

Several factors related to the system’s requirements or to the configuration of the line must be weighed in the selection of transmission line protection. These include the following:

a) **Fault clearing time requirements.** Issues such as system stability and the effects of voltage dip duration on customer service may influence the selection of the protective systems. The clearing time consideration not only influences the selection of the primary relays, but may also dictate the application of local backup protection and may control the options for intersubstation communications.

b) **Line length.** Very short lines or very long lines may require special protection solutions (see 4.1).

c) **Strength of sources.** Closely related to the line length consideration is the strength of the sources to a transmission line. Source strength determines fault current levels and affects the ability of protection systems to provide adequate selectivity. If the strength of the sources is subject to significant variations due to changes in operating conditions, the protection may require the flexibility to be easily modified, or to automatically adapt, to accommodate the variations.

d) **Line configuration.** As discussed in detail in Clause 4, the number of terminals, the effects of tapped loads or generation, or such influences as series capacitors or shunt reactors, may require special protection practices.

--`,,`,,,-`-`,,`,,`,`,,`---

Copyright © 2000 IEEE. All rights reserved.
Copyright The Institute of Electrical and Electronics Engineers, Inc.
Provided by IHS under license with IEEE
No reproduction or networking permitted without license from IHS
Not for Resale

e) **Line loading.** Very heavy loading may require special types of protection systems that include load-blinding features or that are naturally immune to load flow.

3.2.4 Communications

Many of the transmission line protection options depend on communications between the line terminals. The choice of communications is influenced by many factors, including most of the factors that influence the selection of the protective relaying. If the choice of communications is dictated by factors independent of the choice of the protective relaying system, then the communication system will influence the protection to be applied. If the protection is chosen based on factors independent of the communications, then the communication selected should be compatible with the protection requirements. See 5.2 for a discussion of the interrelationships of protection and communications.

3.2.5 Past practices

The selection of protection should take into consideration past practices and the familiarity of the responsible personnel with these practices. The selection of different protective systems may result in requirements for development of new documentation and for training. Special protection solutions can only be effective if designed properly, installed and commissioned correctly, and supported sufficiently by operations and maintenance personnel.

3.2.6 Old versus new technologies

Similar to the discussion on past practices is the issue of whether to sustain application of the old “tried and proven” technologies, or take advantage of the many advanced protection features provided by new technologies. Often, the benefits of the new technologies in areas such as reduced maintenance requirements and additional operational information provide the incentives to make the change. Newer relay technologies also provide lower CT burdens, better sensitivities, wider setting ranges, easier setting changes, greater flexibility, and the ability to solve special protection problems. Multifunctional relays also reduce panel wiring and panel space.

3.2.7 The future

While it is not possible to anticipate all changes to the line or to the surrounding system within the foreseeable future, it is often prudent to select protection that is capable of handling changes in line loading, source conditions, or effective line length. Other changes to CT ratios, communications, substation configuration, etc., can be handled if the protection is selected and designed to be flexible, easy to modify, or even easy to replace.

3.2.8 Failure modes

Protective relaying design should minimize the effects of “single-point failures.” A single-point failure is any one failure of a relay, breaker, dc auxiliary supply, communication system, or any other component of the overall protective system. Redundancy or duplication of protection, local backup protection, remote backup protection, and duplication of other system components are used to minimize the effects of single-point failures.

“Common mode failure” is another design consideration. Common mode failures are multiple failures occurring due to a common cause. Examples would be failures due to a dc system transient or to induced currents, or those caused by mechanical jolts, such as bumping the panel or earthquake vibrations. Other common mode failures could be application errors, setting errors, or incorrect maintenance or calibration procedures. Independence in the operating principles of the primary and backup systems is a technique widely applied to minimize common mode failures. Physical isolation or separation, use of different manu-

Copyright © 2000 IEEE. All rights reserved.

Copyright The Institute of Electrical and Electronics Engineers, Inc.
Provided by IHS under license with IEEE
No reproduction or networking permitted without license from IHS
Not for Resale

facturer's equipment, varying maintenance personnel from time to time, and independent checks of settings and designs are other techniques for reducing the possibility of common mode failures.

3.2.9 Protective scheme design compromises

The design of the protective relay system may require considerable compromise. Reliability is, by definition, a combination of dependability and security, which are often mutually exclusive. Other compromises are reliability versus cost, speed versus security, simplicity versus complex features, independence of design and manufacturer versus standardization, and old technology versus new technology. All of these, and many more choices, make up the design decision. The prudent relaying design engineer will document these choices, particularly the compromises and the reasons behind them. This documentation process provides management with the information necessary to evaluate the protection in less technically complex terminology. It also provides continuity and consistency over time so that subsequent generations of protection personnel can better understand the reasons for certain practices.

The very act of documenting the reasons for choices and compromises often reveals other alternatives or options and generally results in a better final design.

3.3 Redundancy and backup considerations

Redundancy for transmission line protection can be provided by a number of methods, each with varying levels of complexity, benefits, and costs. These methods include two or more duplicate protection schemes, local backup, remote backup, and the duplication of dc sources, CTs, VTs, and breaker trip coils.

Different, or perhaps identical, protection systems operating in parallel is a common practice on most transmission lines. Independent operating principles of these different protection systems are often considered important. The degree of duplication in dc sources, CTs, VTs, and the application of interrupting devices is usually determined by the importance of the application and the consequences of single contingency failures.

Local backup schemes may consist of other protective devices with similar protective characteristics for the case of a relay failure-to-detect a fault condition. Control circuit and protection techniques may be designed to protect the faulted line in the case of a power circuit breaker failure-to-trip condition. Local backup can usually provide faster backup fault clearing than remote backup protection.

Remote backup protection provides slower fault clearing and results in more of the system being de-energized. It is widely applied to provide relatively inexpensive, independent backup protection. The sensitivity of remote backup protection may not be adequate for all fault types, fault locations, and system configurations, in which case local backup protection is required.

3.4 Reclosing methods

To maintain the integrity of the overall electrical transmission system, protective relays are installed on the transmission system to isolate faulted segments during system disturbances. Faults caused by lightning, wind, or tree branches could be temporary in nature and may disappear once the circuit is de-energized. Automatic reclosing systems are put into place to re-energize and restore the faulted section of the transmission system once the fault is extinguished (providing it is a temporary fault). For certain transmission systems, reclosing is used to improve system stability by restoring critical transmission paths as soon as possible.

There are several types of reclosing schemes used in the transmission system, as follows:

a) Unsupervised

Copyright © 2000 IEEE. All rights reserved.
Copyright The Institute of Electrical and Electronics Engineers, Inc.
Provided by IHS under license with IEEE
No reproduction or networking permitted without license from IHS
Not for Resale

1) High speed (no intentional delay)
2) Delayed

b) Supervised
1) Synchronism check
2) Undervoltage line/bus
3) Return of voltage

The type of reclosing used is typically dependent on the voltage level, customer requirements, stability considerations, and the proximity of a generator. Higher voltage transmission lines typically reclose on high speed, voltage check, and/or synchronism check. Lower voltage transmission systems may have two or three blind shots from either end of the line. Details of various features that may accompany automatic reclosing schemes are beyond the scope of this guide (see IEEE PSRC Report [B1]).

3.5 Effects of load on line relay applications and settings

One of the principal influences on protective relay settings is load; hence, maximum load current level, in turn, may influence fault detection sensitivity.

3.5.1 Phase overcurrent relays

Phase overcurrent relays must be set to avoid operation on all of those “normal” conditions to which they may be subjected, such as transformer inrush, motor starting current, maximum emergency load conditions, and maximum recoverable swing conditions. This usually entails a time overcurrent pickup setting above a maximum load current level and/or a coordinated instantaneous pickup setting to ensure security of the relays against misoperation. The sensitivity achievable is, therefore, somewhat coarse, but many applications in which they are used do not require extreme sensitivity (see 5.1.1 and 5.1.2).

3.5.2 Ground overcurrent relays

Ground overcurrent relays have the advantage of utilizing a current source that supplies little or no normal current to the relays. The sensitivity achievable is substantially better than that afforded by phase overcurrent relays. Only unbalanced load current and normal system unbalance affect the setting of these devices.

3.5.3 Directional overcurrent relays

Directional overcurrent relays have the same restrictions as phase and ground overcurrent relays for load flow in their tripping direction. Properly selected directional elements block tripping for load flow and faults in the nontripping direction.

3.5.4 Phase distance relays

Phase distance relays have a relatively fixed reach; they operate most sensitively when fault currents are present and less sensitively when only load current exists. Fault currents typically lag voltage by 60° or greater. Load current typically leads or lags voltage by 30° or less. Although less sensitive in the load angle region, phase distance relays may require a setting for adequate fault coverage that may limit line loading (see 5.6.1).

3.5.5 Ground distance relays

Ground distance relays may also be susceptible to the error associated with ground fault resistance and out-of-phase sources. Further, they may have overreach and underreach characteristics for the “leading” and “lagging” phases in responding to phase-to-phase-to-ground faults, unless provision is included to compen-

Copyright © 2000 IEEE. All rights reserved.

Copyright The Institute of Electrical and Electronics Engineers, Inc.
Provided by IHS under license with IEEE
No reproduction or networking permitted without license from IHS
Not for Resale

sate for these factors. Many ground distance relays operate on phase current and voltage inputs, making them susceptible to operate under heavy load conditions. For this reason, ground distance relays are usually supervised by ground overcurrent elements, which must be set to avoid operation for heavy unbalanced loads. Load current will also influence the "reach" of these devices where fault resistance is involved (Giuliante, McConnell, and Turner [B13]).

3.5.6 Pilot systems—two terminal

The influence of load on pilot systems is highly dependent on the nature of the protective relaying scheme. Those systems using overreaching distance measurement, such as directional comparison blocking, permissive overreaching transfer trip (POTT), and directional comparison unblocking, have the advantage of limited load angle sensitivity and have the absence of a critical reach due to the nature of the relaying system. These relays have very little influence from load except in very long line applications, and this is often accommodated by blinders that prevent operation of the protective relaying system under balanced, three-phase load conditions.

For direct underreaching transfer trip (DUTT) schemes, the pilot distance relays are set short of the remote line terminal. This setting makes the scheme less susceptible to tripping under heavy loading conditions. However, the reach variation of the distance relay as a result of prefault load current is much more critical than for the overreaching schemes. It is imperative that load or fault current, or any combination of the two, never be able to cause operation of the Zone 1 relay for any condition other than a fault on the protected line.

Phase comparison and current differential schemes are not normally susceptible to operation under load condition because of their inherent nature of comparing current into the line at one terminal with current out of the line at the other. However, load does influence the setting of fault detectors in phase comparison blocking schemes and in current differential schemes when operation following channel failure is allowed. Current differential schemes may be sensitive to tapped loads, and settings should be chosen accordingly. Also, high levels of through load current may reduce the fault detection sensitivity of both phase comparison and current differential schemes. When transmission cables are used, special considerations may be required for the fault detector settings because of the capacitance of the cables.

3.5.7 Pilot systems—three terminal

In addition to its significance, which is outlined in 3.5.1 through 3.5.6, load in a three-terminal line application may represent an outfeed condition for an internal fault. Depending on the particular type of relaying system, this may produce an undesired blocking effect. Three-terminal applications generally have at least one weak source and, consequently, care must be exercised to ensure that either the contribution to an internal fault exceeds this load current outfeed, or the relaying system bases its response on the total internal fault current.

4. System configuration

4.1 Length considerations

This clause is concerned with the influence of line length on the selection of the line protection scheme to be applied. Transmission lines may be defined or classified as short, medium, or long.

Short lines are so designated because the SIRs are large. Ratios of approximately four or greater generally define a short line. Medium lines are those having SIRs from four down to 0.5. Long lines are those having SIRs that are very small, meaning ratios of 0.5 or less.

Copyright © 2000 IEEE. All rights reserved.
Copyright The Institute of Electrical and Electronics Engineers, Inc.
Provided by IHS under license with IEEE
No reproduction or networking permitted without license from IHS
Not for Resale

It should be noted that for a given length of line, the per unit impedance varies much more with the nominal voltage of the line than the ohmic impedance. This factor, together with the different short-circuit impedances at different voltage levels, means that the nominal voltage of a line has a significant effect on the SIR and, thus, whether it would be considered "short," "medium," or "long."

For instance, consider a 500 kV line with a positive sequence reactance of 0.332 Ω/km. This corresponds to a reactance of 0.00013 pu per km on a 100 MVA base, at 500 kV. If the source impedance behind a relay terminal is 0.01 pu (corresponding to a fault level of 10 000 MVA), the following classifications apply:

— Line lengths less than about 19 km would result in an SIR > 4 and might be considered short.
— Line lengths greater than about 150 km would result in an SIR < 0.5, and might be considered long.

On the other hand, a 69 kV line, with a positive sequence reactance of 0.53 Ω/km, might have very different length classifications. For such a line, the reactance is 0.015 pu per km on a 100 MVA base, at 69 kV. If the source impedance behind a relay terminal is 0.1 pu (corresponding to a fault level of 1000 MVA), the following classifications apply:

— Lines lengths less than about 1.7 km would result in an SIR > 4 and might be considered short.
— Line lengths greater than about 14 km would result in an SIR < 0.5 and might be considered long.

These examples demonstrate the importance of source impedances and nominal voltages in classifications of a line as "short," "medium," or "long."

Although the physical length of lines is a factor in the SIR, it is inappropriate to describe the line as long, medium, or short based on this characteristic alone. However, the distance between the terminals of a given line may be a factor in determining the type of relay communication system to be used.

The types of communication systems typically used for transmission line protective relaying include the following (abbreviations are shown):

— Fiber optic (FO)
— Pilot-wire 50, 60 Hz (PW)
— Pilot-wire audio tones (AT)
— Power line carrier (PLC)
— Microwave (MW)
— Point-to-point radio (R)

4.1.1 Short lines (SIRs > 4)

Typical protection schemes and communication channels used are as follows:

— Current differential (FO, PW, AT, MW)
— Phase comparison (FO, PW, AT, PLC, MW, R)
— POTT (FO, PW, AT, PLC, MW, R)
— Directional comparison blocking (FO, PW, AT, PLC, MW, R)

Short lines result in a small current magnitude difference and minimal voltage drop difference between close-in and remote faults. Non-pilot overcurrent relays usually cannot be set to discriminate between internal and external line faults. Non-pilot distance relays may be able to discriminate between internal and external line faults for lines with an SIR as high as 20. (See 5.9 for additional information on short line protection.) However, it may not be possible to coordinate non-pilot distance relays on adjacent long lines with

--`,,```,,,,````-`-`,,`,,`,`,,`---
Copyright © 2000 IEEE. All rights reserved.

Copyright The Institute of Electrical and Electronics Engineers, Inc.
Provided by IHS under license with IEEE
No reproduction or networking permitted without license from IHS
Not for Resale

the short line distance relay zones. Therefore, pilot relay schemes utilizing communication channels are used.

The most effective forms of pilot protection for short lines include current differential, phase comparison, POTT, and directional comparison blocking schemes. None of these schemes require distance elements to be set for less than the line impedance. Schemes utilizing Zone 1 distance elements should provide the capability to handle arc resistance or fault impedance, which can be significant compared to the line impedance. Current differential and phase comparison systems do not provide remote backup for adjacent system elements. However, non-pilot overcurrent and distance relay schemes can be applied as backup protection, provided time delays are adjusted to provide coordination.

4.1.2 Medium lines (SIRs < 4, but > 0.5)

Typical protection schemes used are as follows:

— Phase comparison (AT, PLC, MW)
— Directional comparison blocking (AT, PLC, MW)
— Permissive underreaching transfer trip (FO, MW)
— POTT or unblocking (FO, MW, PLC)
— Step distance
— Step or coordinated overcurrent
— Inverse time overcurrent
— Current differential

NOTE—Permissive underreaching transfer trip (PUTT) is discussed in 5.2.4.2; POTT is discussed in 5.2.4.3.

Lines with SIRs less than four allow more effective relay discrimination. Relay schemes utilizing underreaching elements can now be set. Zone 1 can be set to underreach the remote end and still protect 80–90% of the line. The last 10–20% of the line can be protected by a Zone 2 overreaching element. Since selectivity and sensitivity can usually be met, the speed with which a fault needs to be cleared may require the application of pilot relaying. If slow fault clearing is acceptable, simple step distance or overcurrent relays can be applied.

4.1.3 Long lines (SIRs < 0.5)

Typical protection schemes used are as follows:

— Phase comparison (PLC, MW)
— Directional comparison blocking (PLC, MW)
— PUTT, POTT, or unblock (AT, PLC, MW)
— Step distance
— Step or coordinated overcurrent

Long lines have small SIRs, and most long lines are extra high voltage (EHV) or ultra high voltage (UHV) lines. EHV and UHV lines almost always require high-speed tripping of all terminals for stability purposes and to minimize damage caused by the fault. Long lines can also have other system elements included in the line, such as series capacitors. This makes the total line impedance variable under certain conditions and introduces transient behavior that makes selectivity difficult. Phase and directional comparison protection schemes over PLC or MW are well suited to this type of application.

Copyright © 2000 IEEE. All rights reserved.
Copyright The Institute of Electrical and Electronics Engineers, Inc.
Provided by IHS under license with IEEE
No reproduction or networking permitted without license from IHS
Not for Resale

Schemes utilizing distance functions should be applied ensuring that the long reach settings do not restrict load transfer. Also, long communication channels require some attention to ensure that signal attenuation or time delay is not excessive.

4.2 Line design

Transmission lines may be overhead air-insulated lines, insulated cable systems or, in some cases, combinations of both. The electrical characteristics are significantly different.

4.2.1 High-voltage cables

The series inductance of cable circuits is typically one-half to one-third that of comparable overhead lines. The reactance to a fault will, accordingly, be lower for cable systems and becomes a consideration in the application of distance relays. As a practical consideration, cable systems find frequent use in urban or metropolitan areas where short lines are typical. Cables are, therefore, frequently protected using those techniques most suitable to circuits with low total impedance (IEEE PSRC Report [B25]).

4.2.2 Electrically connected double circuit transmission lines

At times, the phase conductors of parallel transmission lines are jumpered together to form a single transmission line. Generally the line is modeled by assuming the phases to be two conductors of a single bundle. The calculations of line impedance are simplified by assuming the lines are fully transposed, even though they most likely are not. Since the lines configured in this manner are generally not very long, the effect of transposition will be negligible.

Fault currents and apparent impedances, as seen by relays, are affected by a fault on one conductor of a phase. The effect of the fault is isolated between the adjacent jumpers. The current on the unfaulted conductor will flow past the fault location to the next jumper before crossing over, causing an increase in the apparent impedance. This will cause impedance relays to underreach. The worst case occurs where the lines are jumpered only at the ends. This problem can be reduced by adding more jumpers at intermediate locations along the line length. An adequate number will negate the effect, since all single-conductor faults will then be near a jumper.

The effects can be studied if the jumpers near a point of interest (such as a fault near the far end) are modeled as bus points and the conductors in between are treated as mutually coupled parallel lines.

4.3 Number of line terminals

The number of terminals on a transmission line is a basic and important factor when selecting a protective system. A particular terminal becomes significant to the selection of the protective system if it supplies current to faults on the transmission line. The main terminal(s) that can supply fault current must have a protective system that does not operate for normal power flow, but does operate when fault current is detected on the line.

4.3.1 One terminal (radial lines)

A radial transmission line is one that has a source of current at only one terminal, even though the line may split into multiple sections. Quite often, the protection need only measure short-circuit quantities at the source terminal. For radial line faults, it is usually not necessary to determine the direction of the fault current because the fault current can flow in only one direction. Some exceptions occur when the line supplies significant motor load and zero-sequence current sources. Examples of zero-sequence current sources include the following:

Copyright © 2000 IEEE. All rights reserved.

Copyright The Institute of Electrical and Electronics Engineers, Inc.
Provided by IHS under license with IEEE
No reproduction or networking permitted without license from IHS
Not for Resale

— Grounded wye/delta three-phase transformers
— Grounding transformers
— Autotransformers with delta tertiaries

When the magnitude of ground fault current from these sources is sufficient to be detected by the protection system, the line protection system must be able to distinguish whether the ground fault current is flowing out to a fault on the line, or the fault current is flowing into a fault “behind” the terminal.

The protection system needs to detect a range of short-circuit currents, from large-magnitude, close-in faults to what can be very small-magnitude remote faults for long lines. Remote faults can be difficult to detect on long lines due to large line impedances, arc resistance, and high-resistance ground return paths.

When the magnitude of remote fault current falls below the detection sensitivity of the relays at the terminal, an additional, more sensitive protective system could be required in series with the line at a point where detection from the terminal is not possible. Additional fault detection and clearing devices are used in series with the line protective system on radial lines when

— The fault magnitude for remote faults cannot be detected at the source terminal.
— It is desired to avoid tripping the entire line for faults at the remote end of the line or along tapped radial line sections.

The magnitude of short-circuit current supplied from the source terminal can vary, depending on system elements being either in or out of service. This factor also needs to be considered when selecting the protective system.

4.3.2 Two terminals

The most common type of transmission line is one that has two terminals, either of which can supply current to faults along the line. When a fault occurs, a method must be used to determine whether the short-circuit quantities measured at the terminals indicate that the fault is on the line between the terminals, or the fault current is merely flowing through this particular line to a fault elsewhere in the transmission system.

A common method used to determine where the fault exists is the direction of fault current flow. Direction of ac current flow, which alternates every half-cycle, must be determined with respect to a reference. The line terminal voltage is typically chosen as the directional reference. Current flowing into the terminal from the line indicates that the fault is not on the line. Current flowing out of the terminal indicates that the fault is on the line or beyond the remote end terminal.

Another useful characteristic of the short-circuit quantities used to determine where the fault is located is current magnitude and phase angle. This characteristic is ineffective on short lines because the close-in and remote faults appear similar. However, a long line will have a wide range of fault current magnitudes when comparing close-in faults to remote faults.

4.3.3 Multiterminal lines

Transmission lines with more than two main terminals offer additional challenges for correctly detecting faults on the line, primarily because of radical changes in fault current levels and apparent impedances as one or more terminals are opened. The system configuration may result in sequential tripping to protect these lines. If sequential tripping results, care should be taken concerning the redundancy of the relay design, because failure of a relay at one terminal may prevent detection of the fault at another terminal. Sequential tripping also delays fault clearing. Pilot schemes may eliminate sequential tripping. Lines with more than three main terminals (i.e., sources of positive sequence currents) are not recommended (see 5.5).

Copyright © 2000 IEEE. All rights reserved.
Copyright The Institute of Electrical and Electronics Engineers, Inc.
Provided by IHS under license with IEEE
No reproduction or networking permitted without license from IHS
Not for Resale

4.4 Lines terminated into transformers

The typical line terminated into a transformer is shown in Figure 8.



Figure 8—Line terminated into a transformer

The additional protection considerations in this application are as described below.

Some transformer faults will not be detected by the line protection and, thus, will require supplementary protection. One method of supplementing the ability to detect certain faults is the addition of a grounding switch, to place a solid fault on the line if a transformer fault or breaker failure occurs at the transformer end. Another common method is to provide a transfer trip scheme that will trip the remote terminal when a transformer fault is detected.

If line protection can operate simultaneously with, or faster than, dedicated transformer protection for transformer terminated lines, the effect of automatic or manual reclosing should be considered. Many transmission line faults are temporary in nature, and the line may be successfully reclosed a short time after the fault has been cleared. This means that it is often desirable to automatically or manually reenergize a line after the line protection has operated. On the other hand, it is not usually desirable to reenergize a faulted transformer. Therefore, even if the line protection will detect some or all faults in the transformer, it is usually desirable to provide protection equipment dedicated to the transformer that operates at least as fast as the line protection for transformer faults. The transformer protection may block reclosing of the line and/or automatically isolate the transformer.

The transformer impedance limits the fault current contribution for faults on the line and beyond. In some cases, the available fault current may not be sufficient to operate the line relays.

Consideration must be given to the placement of VTs and CTs. There may be a temptation to place the CTs and VTs on the source side of the transformer rather than the line side of the transformer due to cost savings associated with lower-voltage equipment. If the transformer impedance is included in the line protection zone, it will add to the total impedance to be measured by the line protection system and reduce the accuracy of the line protection. Also, if the transformer is not a wye-wye, the distance relay settings can be in error due to phase shift. Depending on transformer connections, the ground relay directional sensing and current magnitude can be erroneous. Figure 9 shows an example in which ground directionality changes from the high side to the low side of the transformer.

--`,,`,,,-`-`,,`,,`,`,,`---
Copyright © 2000 IEEE. All rights reserved.

Copyright The Institute of Electrical and Electronics Engineers, Inc.
Provided by IHS under license with IEEE
No reproduction or networking permitted without license from IHS
Not for Resale

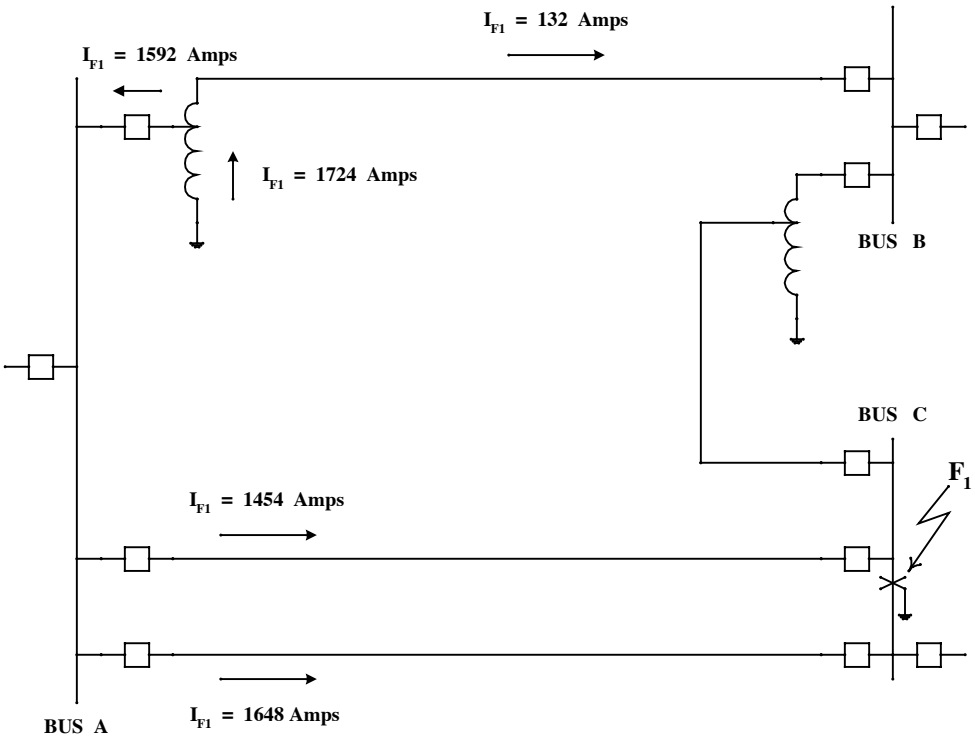

Figure 9—Changes in directional sensing for ground fault

4.5 Weak electrical systems

A system may be considered weak when the source impedance is high. Weak systems often have the following characteristics:

— Relatively low values of fault current availability.
— A fault anywhere on the line causes a relatively flat voltage profile along the line back to the relay location.
— Poor voltage regulation on the line.
— Possible stability problems on the line due to the distance from its power sources.
— Polarizing current sources provide relatively low values of polarizing current.

Weak system characteristics may be found at any voltage level, but are more prevalent at lower transmission voltages. Long line transmission systems with remote generation may also have these characteristics. When small generators, or single unit generators, are installed by independent power producers and connected to the system, weak system characteristics could be created because these units are small or because they are occasionally off line. The latter case is particularly challenging to the application of effective protection.

All weak systems present several challenges to the protection engineer. Some of these are as follows:

a) **Contingency outage considerations.** Different system configurations that occur as a result of system outages may result in substantial changes in line length and load. Backup sources may be connected to a system on a contingency basis, which will change protection considerations. If additional

Copyright © 2000 IEEE. All rights reserved.
Copyright The Institute of Electrical and Electronics Engineers, Inc.
Provided by IHS under license with IEEE
No reproduction or networking permitted without license from IHS
Not for Resale

protective equipment is needed to handle the contingency, proper coordination between the schemes must be considered. Additional relays, modified relay settings, or compromised protection/coordination (in some circumstances) may be required.

b) **Sequential tripping.** It is possible that all of the line terminals on a line in a weak system will not be able to see the fault on the line at the initial inception of the fault (see Figure 10). With a fault as indicated, and the apparent impedances as indicated, the current initially supplied through Breaker 2 will be significantly less than that through Breaker 1. Therefore, at the onset of the fault, the relays at Breaker 2 may not be able to sense the fault. After Breaker 1 opens, the current through Breaker 2 increases by a factor of more than 10, and the relays sense the fault and open Breaker 2 sequentially.

c) **Fault detection.** When a source is weak, there may be insufficient current contribution to a fault on the protected line for a relay to reliably detect a fault. Special logic in pilot systems may be required. The logic, known as weak infeed echo and weak infeed trip, is described in 5.3.5.

d) **Weak source becoming a strong source.** Varying system configurations may cause a system to be, at times, weak or strong. Due to contingencies, some system changes may be made. A power generation source may be added at a location on the system. If the generation units have been designated for peaking only, the time period of unit operation may cause a weak system to become strong.

e) **Fault clearing times.** On a weak system, the fault currents on one end of a line may be nearly the same magnitude as the currents on the other end of the line. At such locations, if non-pilot systems are used, the only possible differentiating element in the determination of fault location may be time (see Figure 11). If Z_{S1} is much larger than the impedances of line segments Z_{L1}, Z_{L2}, and Z_{L3}, the fault current that is seen in any of the three line segments will be approximately the same value. The pickup settings at V_1, V_2, and V_3 may be approximately the same. In order to coordinate the tripping of the lines, time delay may be used to allow the relays at V_3 to trip before the relays at V_2, and the relays at V_2 to trip before the relays at V_1.

f) **Multiterminal lines.** A multiterminal line with a weak source as compared to the other terminals will not detect faults beyond the tap as adequately as relays at a strong source. Thus, the strong source may have to open before the weak source relays can detect the fault. This will result in sequential tripping and, therefore, slower fault clearing than would otherwise occur. The worst case would be a combination of source impedances and line lengths that would require sequential time delay clearing of two of the terminals for phase and/or ground faults.

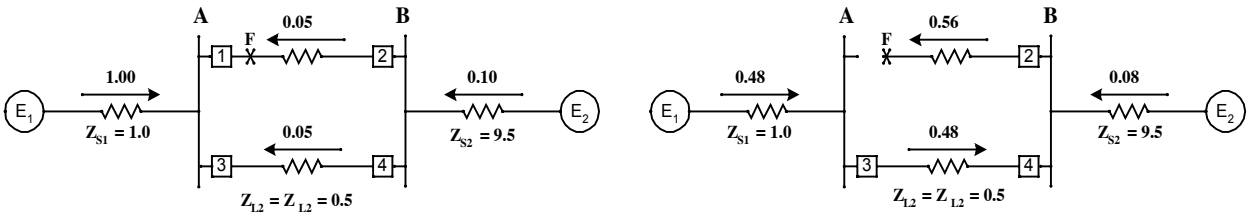

NOTE—All indicated values are pu values

Figure 10—Example of sequential tripping

Copyright © 2000 IEEE. All rights reserved.

Copyright The Institute of Electrical and Electronics Engineers, Inc.
Provided by IHS under license with IEEE
No reproduction or networking permitted without license from IHS
Not for Resale

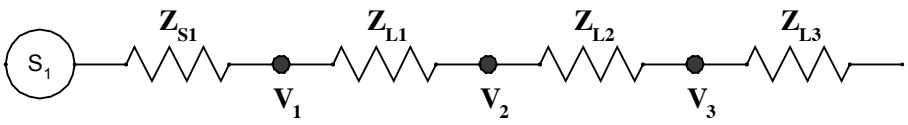

Figure 11—Example of a weak system

4.6 Ground source configurations

Most transmission systems are solidly grounded, with all ground sources tied physically to the station ground mat.

However, some older transmission systems are resistance grounded to reduce single-phase-to-ground fault current. Resistance-grounded systems are sometimes difficult to protect. One problem that can occur is that fault current magnitude can be lower than load current. This diminishes the capability of current-only schemes. Another problem occurs because the fault current is substantially in phase with load current, thereby making it difficult to distinguish between the two. This condition reduces the possibility of using only impedance-based relay schemes on resistance-grounded transmission systems. Directional ground overcurrent relays applied to resistance-grounded systems generally will provide adequate protection.

4.7 Transmission lines with distribution substation taps

It is common utility practice to tap transmission lines to serve distribution load. Figure 12 shows a typical electrical system with Buses 1, 2, 4, and 5 being transmission buses and Bus 3 being the distribution bus. The impedances of segments is shown as Z_A, Z_B, Z_C, Z_D, and Z_E. Z_{Capp1} and Z_{Capp2} represent the apparent impedance of line segment C, as seen by distance type relays at circuit breakers CB1 and CB2, respectively (see 5.5.2). Z_{Eapp1} is the apparent impedance of line section E as seen by CB1.

It should be noted that the "apparent impedance," such as Z_{Capp1} and Z_{Capp2}, mentioned above, is not the actual impedance of the line section, but some larger impedance that depends on the current infeed from some other source part of the way along the protected circuit. Distance type relays calculate impedance to a fault based on the voltage and current as seen at the relay location. On a three-terminal line, the impedance "seen" by each relay will depend, in part, on the current contributions from the other terminals. The actual line impedance from a relay terminal to the point of fault is not always the impedance "seen" by a distance relay. This clause discusses the relay considerations surrounding the relay design of the line between CB1, CB2, and Bus 3.

Copyright © 2000 IEEE. All rights reserved.
Copyright The Institute of Electrical and Electronics Engineers, Inc.
Provided by IHS under license with IEEE
No reproduction or networking permitted without license from IHS
Not for Resale

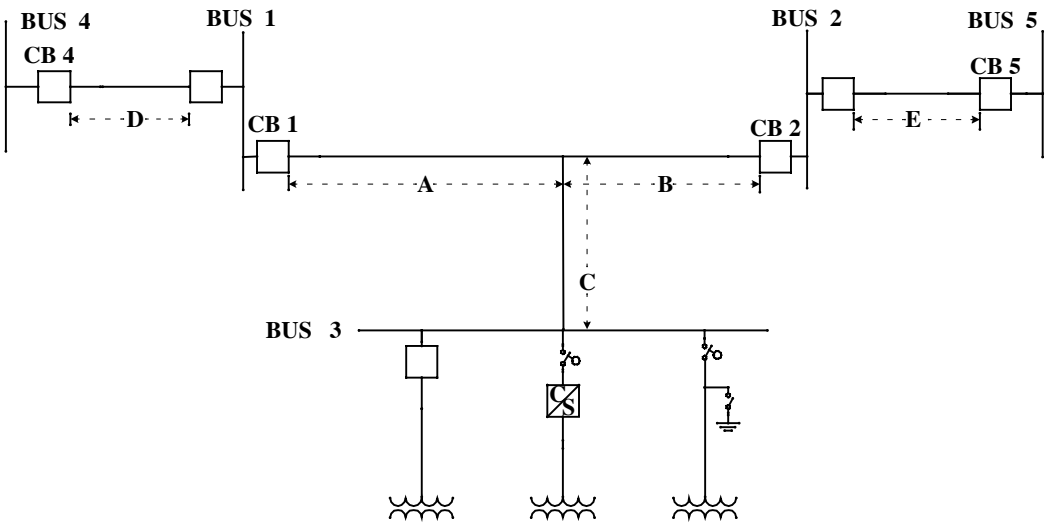

Figure 12—Transmission line with a distribution substation tap

4.7.1 Length and location of tap line

As long as the apparent impedance of C is less than Z_A and Z_B, no significant relaying problems occur because of the tap line. If, however, $Z_{Capp2} > Z_A$, relay setting compromises will be required at CB2. The same holds true for setting relays at circuit breaker CB1, if $Z_{Capp1} > Z_B$. This configuration is further complicated if Z_C is greater than both Z_A and Z_B.

4.7.2 Length of lines on adjoining buses

Whenever line relay settings are extended because of tap lines, the primary, backup, or both relaying schemes may need to be slowed to allow relaying on adjacent lines to coordinate. For instance, when setting relays at circuit breaker CB1 for faults at Bus 3, if $Z_{Capp1} > Z_B$ and $Z_A + Z_{Capp1} > Z_A + Z_B + Z_{Eapp1}$, then time delay must be added to allow coordination for faults at Bus 5 and beyond.

4.7.3 Relay settings limiting line loading

Whenever line relay settings are extended because of tap lines, precautions should be taken to ensure the relay settings are not limiting power transfer or line load carrying capabilities below acceptable values and still properly detect line faults.

4.7.4 Substation considerations that affect transmission line relaying

Generally, transmission line relaying is not designed to see internal transformer faults or low-voltage bus faults. The sensing of these two types of faults is done at the distribution station.

The relays at the distribution station trip the interrupting device associated with the transformer. Where breakers or circuit switchers are not used as high-side interrupting devices, the relays initiate a transfer TRIP signal to the remote breakers or close a ground switch on the high-voltage side of the distribution station transformer. Since transmission relaying is usually not set to see transformer or low-voltage bus faults, if a breaker or circuit switcher fails to trip, local backup should be provided at the distribution station. This local backup can be in the form of transfer trips, ground switches, or air switches. When a ground switch is used,

Copyright © 2000 IEEE. All rights reserved.

Copyright The Institute of Electrical and Electronics Engineers, Inc.
Provided by IHS under license with IEEE
No reproduction or networking permitted without license from IHS
Not for Resale

a motor-operated air switch is often connected ahead of the ground switch and transformer to allow reclosing of the transmission line after the transformer has been isolated.

4.7.5 Use of circuit switchers for transformer protection

It is a utility practice to apply circuit switchers rated below the high-voltage bus fault duty for high-VT protection. The circuit switcher may be blocked from tripping for high-current faults by the use of an instantaneous overcurrent relay. The remote transmission line relaying must sense this particular fault and initiate tripping. If the circuit switcher is not blocked for faults above its rating, it is either allowed to trip or the remote transmission line relaying may be set to trip first.

4.7.6 Transformers as load taps on a transmission line

Transformers can be tapped off any point on the transmission line. Figure 13 and Figure 14 show typical configurations.

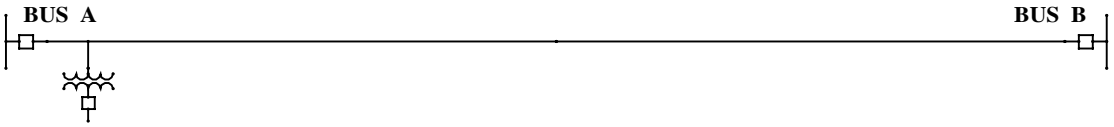

Figure 13—Transformer load tap near one terminal

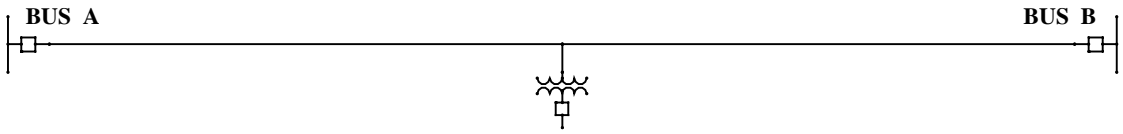

Figure 14—Transformer load tap near center of line

The key protection challenges indicated in these situations, in addition to those provided above, are described below.

A transformer that is not a source of phase or ground fault current requires no special attention. See 4.7.7 if the transformer is a source of phase or ground fault current.

All tapped transformers should be provided with their own dedicated protection systems that operate faster, or at least as fast as, the line protection for faults in the transformer. These dedicated systems will either clear the faulted transformer or, if HV fault-clearing facilities are not available at the tapped station, will initiate tripping of the breakers at the remote terminals of the line and, hence, automatic isolation of the transformer by a motor-operated disconnect switch. Isolating the transformer automatically will ensure that if the transmission line is re-energized, the faulted transformer will not also be re-energized with the line.

If transformers are connected to the lines as shown in Figure 15, closing the N.O. switch will result in a multiterminal line. Further complications will result if the lines are mutually coupled.

NOTE—See 5.5 for problems with multiterminal lines.

Copyright © 2000 IEEE. All rights reserved.
Copyright The Institute of Electrical and Electronics Engineers, Inc.
Provided by IHS under license with IEEE
No reproduction or networking permitted without license from IHS
Not for Resale

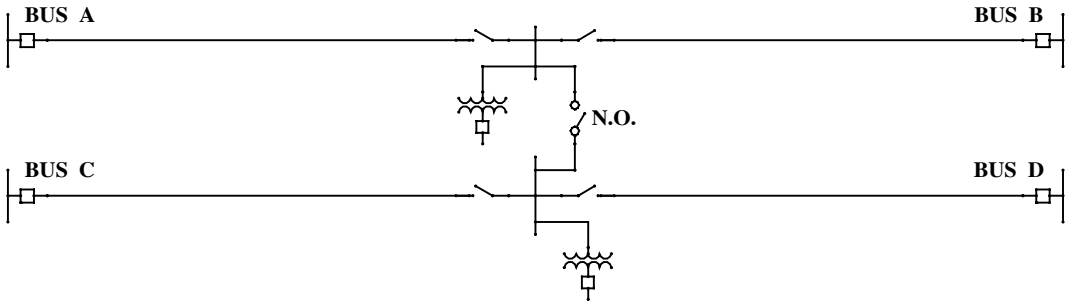

Figure 15—Switch creates the potential for multiterminal lines

Figure 16 is similar to Figure 15, except the line ends terminate in common buses.

It is usually difficult to provide instantaneous line protection that will not trip for at least high side faults within the tapped station. In view of the infrequency of such faults, it may be considered acceptable to allow the line to trip simultaneously with the high side interrupting device at the tapped station for such faults. The line could then be automatically or manually reclosed, restoring the transmission system with the tapped station (with the fault) isolated.

It is important that transmission line protection coordinate with low side protection at the tapped station. Low side equipment (such as distribution feeders) is usually exposed to more frequent faults than occur on the high-voltage side of the station. Thus, it is important that the instantaneous transmission line protection not be able to sense faults on the low side of the tapped station. The most critical case is when the line terminal nearest the tapped station is strong, and the remote terminal is weak, and infeed from the remote terminal does not significantly desensitize the near terminal to faults in the tapped station.

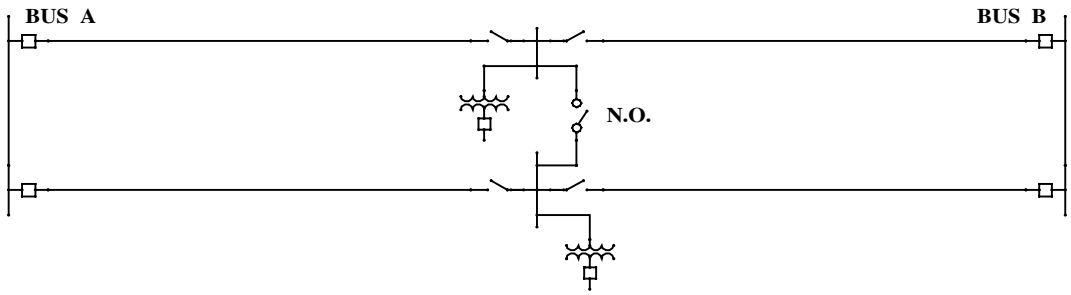

Figure 16—Switch creates the potential for parallel multiterminal lines

4.7.7 Transformer as a source to the transmission system

In some instances, it is possible that the distribution station transformer can be a source to a transmission line fault and must be considered in the relay design. The resulting infeed can cause line distance relays to underreach. This potential exists whenever generation is connected to the distribution bus, or whenever the distribution bus is connected to another distribution circuit served from a different transmission line. If a positive sequence source capable of supplying sustained current to a transmission fault is available from the distribution system, then provision to trip the source, or its feed to the transmission system, is required. Also,

Copyright © 2000 IEEE. All rights reserved.

Copyright The Institute of Electrical and Electronics Engineers, Inc.
Provided by IHS under license with IEEE
No reproduction or networking permitted without license from IHS
Not for Resale

if the transformer has a delta winding, and the high-voltage winding is connected grounded wye, the transformer will be a ground source for zero-sequence currents, causing a similar underreaching of the line ground relays.

If the transformer is a zero-sequence source, the resulting zero-sequence current infeed must be considered when setting the remote ground distance relays or overcurrent relays. The zero-sequence current infeed will desensitize both ground distance and ground overcurrent relays at the main terminals. Since the presence of a zero-sequence source will also tend to reduce the zero-sequence voltage at the line terminals, the performance of zero-sequence directional units must also be evaluated.

A transformer source to a transmission line may be delta connected on the line side and be a source of positive and negative-sequence current to a single-phase-to-ground fault until the last ground source is removed from the line. Then, the line will still be energized by this source; however, no appreciable current can flow due to the delta transformer winding. The delta will remain a source of positive and negative-sequence current flow if the ground source remains on the line (such as a wye grounded/delta transformer tapped to the line) after the main transmission line terminals open. The positive and negative-sequence source of backfeed must be eliminated for multiphase faults and for single line-to-ground faults to ensure arc extinction.

4.8 Lines with devices for var and flow control

For many reasons, control devices can be installed on transmission lines that may affect protection applications. These devices make the transmission system more efficient and controllable. Some of the most common devices installed are:

— Shunt reactors
— Shunt capacitors
— Series capacitors
— Series reactors
— Phase shifting transformers
— Static var compensators (SVCs)

In this subclause, the application of these devices and possible problems they might create for line protection relays are briefly discussed.

4.8.1 Shunt reactors

Shunt reactors are applied on transmission lines to compensate for large capacitive reactance or to suppress secondary arc currents on single-phase tripping schemes. Shunt reactors, whether connected to the line or the bus, should have dedicated protective relays. The reactor may be switched as a unit with the transmission line, or may be connected to the bus behind the line terminal. The reactor current may or may not be included in the current measured by the line protection system. When the reactors are located within the zones of protection of the line relays, the shunt reactors may affect the line relay performance. If the reactor is connected to the bus behind the line protection system, it will generally not have a direct effect on the line protection.

If the shunt reactor is included as part of the zone of protection of the line protection system, the reactor will compensate for some of the effects of line capacitance that can adversely affect a line protection system. The line protection system must be designed to be reliable in the event that the shunt reactor is out of service.

If the reactor is connected directly to the protected line, it will allow the flow of “ring down” currents (which are oscillation currents caused by the line impedance, the shunt capacitance, and the reactor upon line de-energization). These ring down currents will result in a gradually decaying line terminal voltage that may

Copyright © 2000 IEEE. All rights reserved.
Copyright The Institute of Electrical and Electronics Engineers, Inc.
Provided by IHS under license with IEEE
No reproduction or networking permitted without license from IHS
Not for Resale

affect the automatic reclosing scheme. If the reclosing scheme is supervised by voltage detectors, ring down voltages may affect their operation. The ring down frequency, due to the partial compensation by the line reactor, will be at a frequency lower than the rated frequency of the power system. Any relays that sense this oscillating current must be able to accommodate this reduced frequency effect. The ring down voltages may also affect the line protection during the reclose attempt, especially if there is a significant time interval between closure of the three poles of the breaker picking up the line. These voltages have been found to cause undesirable high-speed line protection tripping during line pickup with dissymmetry between pole closings (Engelhardt [B59] and Henville and Jodice [B65]).

When single-phase tripping of a line is employed, the faulted phase may still be energized and conducting current through the distributed capacitance between phases. This is known as secondary arc phenomenon. If the current is sufficiently low as a result of the circuit being comparatively short, or because the phase spacing is relatively large, the arc will ultimately go out; however, the time for the ionized gasses to be dissipated will be considerably longer than the time that would be required if three-phase tripping were employed. On longer lines and double circuit lines, the magnitude of the secondary arc current may be too large to self extinguish. One method used to extinguish the arc during this condition is a four-legged reactor (IEEE PSRC Report [B61]). A neutral is formed for three-phase reactors, and the fourth reactor is connected between neutral and ground. The reactor is sized to cause parallel resonance for the circuit feeding the fault. This causes the secondary arc current magnitude to be very small, allowing the arc to self-extinguish much sooner than would be the case if the four-legged reactor were not used.

4.8.2 Shunt capacitors

Shunt capacitors are used to provide additional var requirements or to increase power system voltages. Usually these devices are installed on transmission or distribution buses. In general, shunt capacitors are installed on the bus and do not affect the line relays (see IEEE Std C37.99-1990 [B23]).

When large amounts of shunt capacitance are connected behind a line terminal, high-magnitude, high-frequency outrush currents can flow from the capacitor into a close-in line fault (McCauley, Pelfrey, Roettger, and Wood [B58]). These currents decay to a negligible value very quickly; i.e., in a few milliseconds. The high frequency of these outrush currents can cause very high voltage to be developed across CT secondary windings. If high voltages due to shunt capacitor transient outrush are a concern, surge suppression varistors may be connected across the CT secondary windings (Drakos et al. [B57]).

4.8.3 Series capacitors

Series capacitors are applied to improve stability, provide better load division on parallel transmission paths, reduce transmission losses, reduce voltage drop on severe system disturbances, or increase power transfer capability. The capacitors may be installed at one end of the line, at both ends of the line, or at midline. The impedance value of a series capacitor is typically between 25% and 75% of the line impedance. Capacitor overvoltage protection is a part of capacitor bank protection. The overvoltage protection consists of a parallel power gap or a metal oxide varistor (MOV). The purpose of this protection is to limit the voltage applied to the capacitor if fault or load current will produce voltages high enough to damage the capacitor. A bypass breaker may also be used in the design for non-fault-related capacitor protection, as well as for providing flexibility of operation. Line protection schemes must also take into consideration the possibility of power gap or MOV failure, unsymmetrical gap flashing, or MOV conduction. Series capacitors will affect the performance of line distance relays.

The effects of the series capacitors on other relays in the nearby system should also be considered, even though they are not applied directly on a series compensated line. Some utilities require a comprehensive series of transient performance tests to demonstrate the speed, dependability, and security of protection systems applied on lines with series capacitors, or adjacent to such lines. Subclause 5.7 discusses in more detail protection of transmission lines with series capacitors.

Copyright © 2000 IEEE. All rights reserved.

Copyright The Institute of Electrical and Electronics Engineers, Inc.
Provided by IHS under license with IEEE
No reproduction or networking permitted without license from IHS
Not for Resale

4.8.4 Series reactor

Series reactors are typically applied for better load division on parallel paths or to limit fault current levels. Series reactors should have their own protection, because certain internal faults might not be detected by the line relays. Also, transient disturbances during energization and de-energization must be studied to prevent any possible problems. Series reactors can be bypassed with a circuit switcher or other switching device. Relay setting changes are usually required when the reactor is bypassed. This can be accomplished with an adaptive relay system.

4.8.5 Phase shifting transformer

Phase shifting transformers are installed to control power flow. The phase shifting transformer must have its own protection, which may consist of several sets of transformer differential, neutral overcurrent, and sudden pressure relays. Location of the CTs and VTs for line protection relays with a phase-shifting transformer is important. CTs used on the bus side of the transformer will be exposed to the inrush current of the bank, and VTs on the bus side will provide voltages with different angles from line side voltages. VTs and CTs supplying line protection devices should not be removed from service with the operation of bypass switches (Bladow and Montoya [B38]).

4.8.6 Static var compensator

An SVC uses thyristor valves to add or remove shunt connected capacitors and/or reactors. SVCs are applied for var compensating, voltage control, and stability control. SVCs are usually connected to buses rather than lines. These devices are protected by dedicated protection (IEEE PSRC Report [B41]; Taylor, Whyte, Brennen, and Bonk [B48]).

4.9 Parallel lines

Parallel lines are defined as lines that share the same structures or right of way for all, or a portion of, their length. These lines may be the same voltage, or the voltages may differ. If the lines are parallel for significant distances, mutual coupling between these lines may have an effect on the performance of the relay protection. Subclause 5.4.4 describes this effect.

Parallel lines also increase the possibility of intercircuit faults, which involve one or more phases of each of two or more separate lines. These lines may or may not be of the same voltage. The effects of intercircuit faults on protective relaying vary based on the phases involved, the voltage levels, and the types of relays on each of the circuits. Because of the relatively small number of these events that cause protection problems, and the large number of permutations that would need to be considered, this guide will not make recommendations regarding protection for intercircuit faults.

4.10 Lines with high-impedance ground returns

Transmission line design factors, such as tower footing resistance and ground wire shielding, directly affect the ground return impedance. This clause examines the causes of high-impedance ground returns, the magnitude of ground fault resistance, and the effects of other configuration factors combined with high-impedance ground returns, relaying concerns, and protection schemes to resolve these concerns.

4.10.1 Causes of high-impedance ground returns

Tower footing resistance and ground wire shielding both impact the impedance of ground returns. Certain faults, such as those involving trees, may also result in a high ground resistance.

--`,,```,,,,`-`-`,,`,,`,`,,`---

Copyright © 2000 IEEE. All rights reserved.
Copyright The Institute of Electrical and Electronics Engineers, Inc.
Provided by IHS under license with IEEE
No reproduction or networking permitted without license from IHS
Not for Resale

Tower footing resistance is directly affected by the geology of the soil and the application of ground rods and counterpoise. In areas where high soil resistivity prevails (e.g., lava flows, gravel base), it may be difficult to achieve effective tower grounding.

Overhead ground wires generally have the effect of substantially reducing the line zero-sequence impedance. In addition, they have the effect of significantly reducing the number of lightning-induced line-to-ground faults. In some instances, utilities elect to not install overhead ground conductors because of low isokeraunic levels, cost, and/or the limited benefit of overhead ground conductors in areas with high soil resistivity. Overhead ground wires reduce the effective tower footing resistance of the system by allowing ground current from a flashover on one tower to find a path to ground through several towers. The footing resistance of several towers in parallel results in an overall reduction in effective resistance.

4.10.2 Range of possible tower footing resistance

For good transmission line lightning performance, tower footing resistance will typically be less than 10 Ω. However, tower footing resistance can vary from less than one ohm to several hundred ohms. In cases of high ground resistivity and no overhead ground wire, ground fault resistances as high as 800 Ω have been measured. These high resistances amplify the problems associated with infeed from remote terminals and weak source conditions (LeFrancois [B33]).

4.10.3 Effects of high ground fault resistance on relaying

High-resistance ground faults present certain considerations and challenges to relaying. Some of the general factors to consider are as follows:

— Ground distance relaying may be adversely affected and may not be sensitive enough to operate.
— Ground overcurrent relays can be set more sensitive than distance relays.
— Slower tripping may result; however, with reduced fault magnitudes, longer fault clearing times can usually be tolerated.
— Where single-phase tripping and reclosing is applied, it may become more difficult to identify and select the faulted phase.
— Fault locating techniques based on impedance measurement will be subject to reduced accuracy.

4.11 Terminal configuration considerations

There are four basic configurations for terminating transmission lines: single breaker, breaker-and-a-half, double breaker, and ring bus.

4.11.1 Single breaker

With this scheme, one line is terminated in one breaker, which in turn is terminated in a bus, transformer, or other source or load, as shown in Figure 17. If relaying VTs are required, one set of bus VTs can be used for all breakers on the bus. Line relaying CTs are usually located on the bus side of the circuit breaker. If a line is terminated in a transformer, the transformer CTs can be used for line protection.

Copyright © 2000 IEEE. All rights reserved.

Copyright The Institute of Electrical and Electronics Engineers, Inc.
Provided by IHS under license with IEEE
No reproduction or networking permitted without license from IHS
Not for Resale

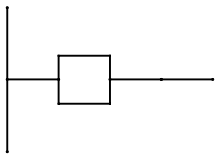

Figure 17—Single bus–single breaker

4.11.2 Breaker-and-a-half

This configuration utilizes three breakers in series connected between two buses, as shown in Figure 18. A line is terminated between two of the breakers. A second line, or transformer, generator, etc., is then connected between the center and third breaker. This configuration is typically used at higher voltage or where it is desirable to keep a line energized with the loss of one breaker or one bus. Also, the breaker-and-a-half scheme allows removal of any one breaker in the string for maintenance, or for some other reason, without taking the line out of service. CTs are summed up in two breakers for the line relaying, and both breakers must be tripped to clear a line fault. If the relay system requires VTs, they are located on the line side of the circuit breakers. This is a higher equipment and installation cost, but provides a flexible line termination configuration.

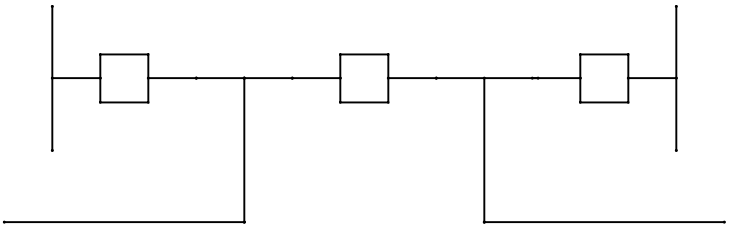

Figure 18—Breaker-and-a-half

4.11.3 Double breaker–double bus

The double breaker–double bus scheme is a variation of the breaker-and-a-half configuration and is sometimes used along with it. Two breakers are connected between two buses, and the transmission line is connected between the breakers, as shown in Figure 19. This configuration allows breaker and bus redundancy for the transmission line termination. CTs from the two breakers are summed for the line protection. If the relay system requires VTs, they are located on the line side of the circuit breakers. Again, both breakers must be tripped to clear a line fault. This is the most expensive, but most flexible, line termination configuration.

Copyright © 2000 IEEE. All rights reserved.
Copyright The Institute of Electrical and Electronics Engineers, Inc.
Provided by IHS under license with IEEE
No reproduction or networking permitted without license from IHS
Not for Resale

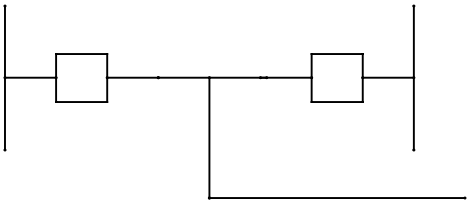

Figure 19—Double bus–double breaker

4.11.4 Ring bus

In the ring bus configuration of Figure 20, the required number of breakers is connected in a closed ring. Each transmission line is then connected between two breakers. Transformers, generators, or other equipment are connected in the same manner. The line relaying is connected to the summation of CTs from the two breakers, and both breakers must be tripped to clear a line fault. If the relay system requires VTs, they are located on the line side of the circuit breaker. This is the least expensive configuration that allows the line to be connected to either or both breakers for flexibility.

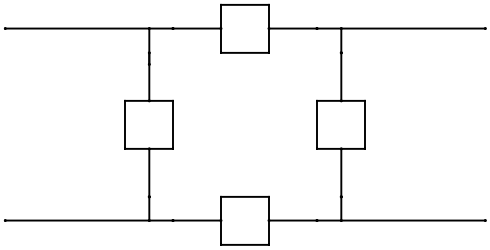

Figure 20—Ring bus

4.11.5 Line or breaker bypasses

The only bypass required for continuous operation of a transmission line in the terminal configurations described would be the single breaker scheme shown in Figure 21a. A breaker bypass would only be installed in the most critical case where a line could never be taken out of service and could not be supplied from another source. A bypass to the bus without special circuitry would require the line and bus differential relaying to be blocked. A better approach would be to establish a bypass for the transmission line to another line or circuit, shown in Figure 21b, so a breaker can be used to clear the line in case of a fault.

Copyright © 2000 IEEE. All rights reserved.

Copyright The Institute of Electrical and Electronics Engineers, Inc.
Provided by IHS under license with IEEE
No reproduction or networking permitted without license from IHS
Not for Resale

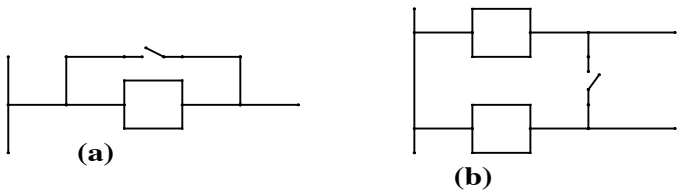

Figure 21—Line or breaker bypass

4.11.6 Substation ground sources

Sources of ground current for line-to-ground faults can be the same for any of the terminal configurations shown in Figure 22. These sources could be station delta-wye or autotransformers, solid or limited current grounded. In the case where insufficient ground current is present to properly detect ground faults, a grounding transformer can be added at the substation. In some cases, as in a switching station, all ground current is supplied by remote sources.

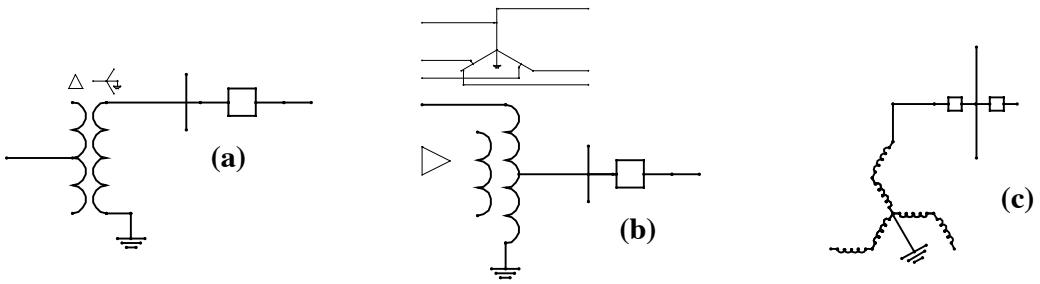

Figure 22—Substation ground sources

5. Relay schemes

5.1 Non-pilot schemes

5.1.1 Nondirectional overcurrent relay schemes

Overcurrent protection is the simplest and least expensive form of fault protection that can be placed on transmission lines. The operating principles depend only on current magnitude. The ac connections for three-phase and one ground time overcurrent (TOC) relays and instantaneous overcurrent (IOC) relays are shown in Figure 23.

Copyright © 2000 IEEE. All rights reserved.
Copyright The Institute of Electrical and Electronics Engineers, Inc.
Provided by IHS under license with IEEE
No reproduction or networking permitted without license from IHS
Not for Resale

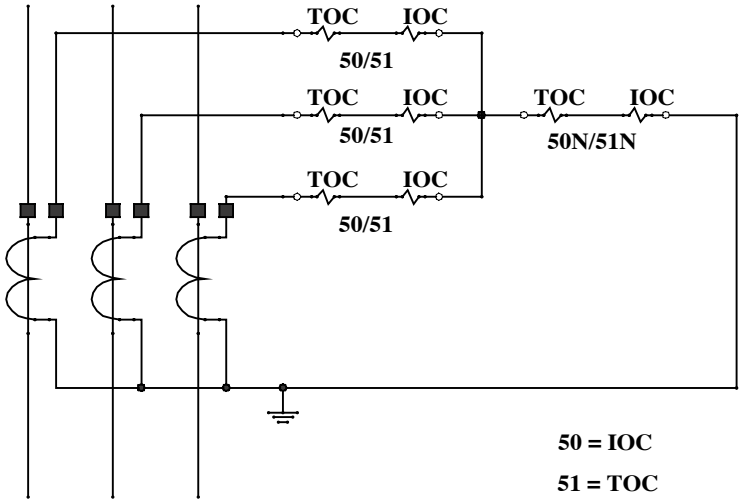

Figure 23—Connections for overcurrent phase and ground relay

Phase currents or sequence currents can be used as the operating quantity. Phase overcurrent relays operate for all possible fault types, but require their pickup settings to be higher than the maximum expected normal or emergency load flow condition. Negative and zero-sequence overcurrent relays do not operate for balanced loads or for three-phase faults, but can have pickup settings well below the expected load. Tripping may be instantaneous, delayed for a fixed time, or delayed for a time inversely proportional to the current magnitude. Figure 24 shows some of the various shapes of time/current characteristics that may be used.

Instantaneous tripping can be applied if the pickup point of the instantaneous unit can be set higher than the maximum contribution to faults outside the protected line. The percentage of a line that can be protected by an instantaneous overcurrent relay will vary with line length and source impedance. To protect an entire nonradial line, time delays are generally required to achieve coordination with downstream protective devices. Figure 25 shows how coordination is achieved between a relay with a time and instantaneous element (the primary relay), and an upstream (backup relay) with only a time element. To ensure proper coordination, the pickup point of the instantaneous unit should be set higher than the maximum contribution to faults outside the protected line.

The pickup value of the time element should be set to prevent tripping for the maximum load current that can flow in either direction on the line. The time adjustment (i.e., dial) should generally be set to produce the fastest operating time that will not result in miscoordination with other protection behind or in front of the terminal. The effect of varying the time adjustment is illustrated in Figure 26 for a typical time overcurrent relay.

Nondirectional overcurrent relay schemes find limited application on transmission lines. Because transmission lines usually have at least two sources of fault current, the nondirectional elements have to be coordinated with protective devices both in front of and behind the line terminal. This makes the coordination of nondirectional relays more difficult, and sometimes impossible. In some applications, these relays may be applied only at the terminal with the higher fault current source.

Copyright © 2000 IEEE. All rights reserved.

Copyright The Institute of Electrical and Electronics Engineers, Inc.
Provided by IHS under license with IEEE
No reproduction or networking permitted without license from IHS
Not for Resale

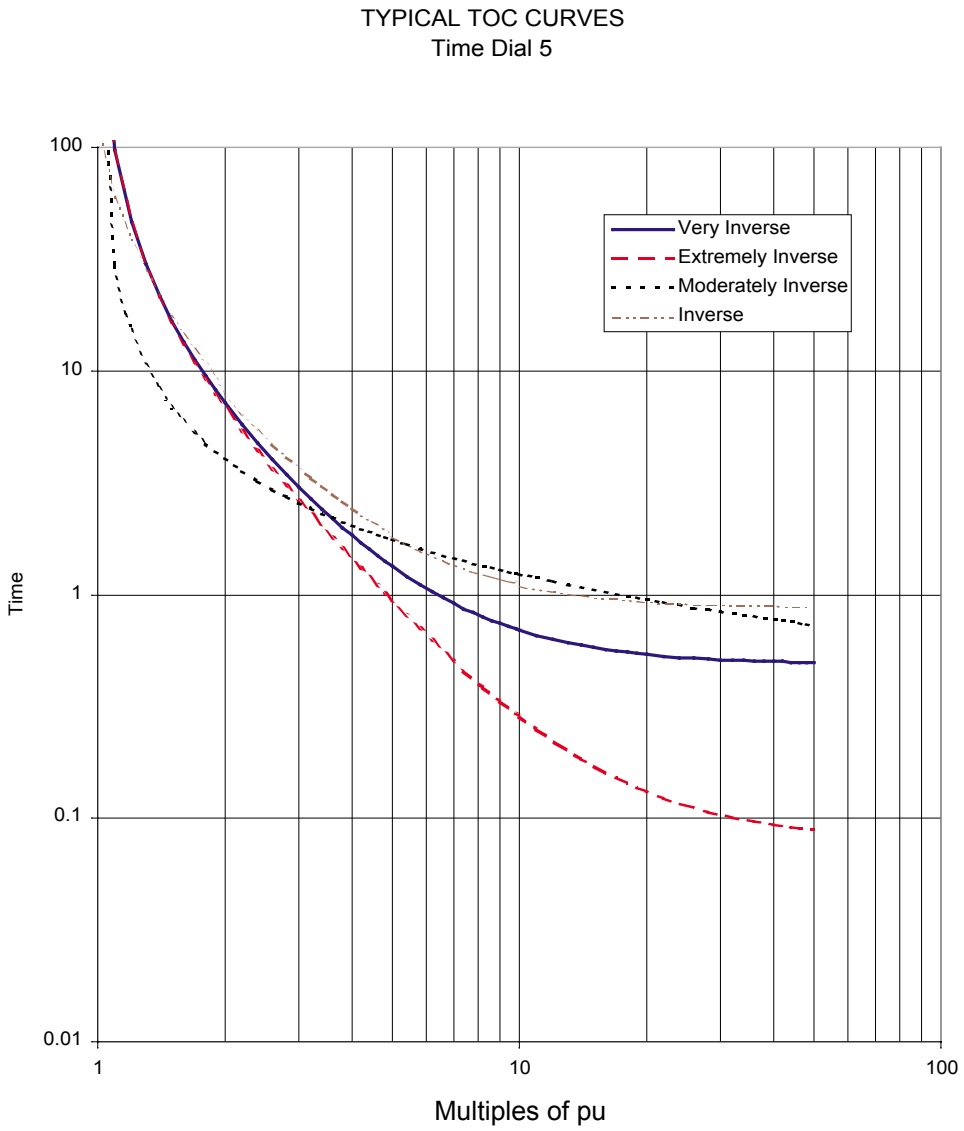

Figure 24—Time overcurrent curve shape comparison

In a few cases, nondirectional overcurrent relays can be applied on long transmission lines. On such lines, the contribution of fault current to faults in the reverse direction (behind the terminal) is limited by the impedance of the long line. Also, in the forward direction, close-in faults are much higher in magnitude than faults beyond the remote terminal. In such applications, instantaneous, nondirectional phase and ground overcurrent protection can provide very fast and secure detection of close-in faults. Nondirectional ground time overcurrent protection can also be used on long lines to protect the full circuit with minimal coordination problems with faults in the reverse direction.

Overcurrent relay schemes are used primarily on distribution and subtransmission feeders where load and fault current are in one direction (e.g., on radial feeders) and where a low relative cost is desired. The choice of a time overcurrent characteristic is based on sources, lines, and loads. In general, the characteristic should closely match that of the downstream protective devices to achieve proper coordination at all fault current levels.

Copyright © 2000 IEEE. All rights reserved.
Copyright The Institute of Electrical and Electronics Engineers, Inc.
Provided by IHS under license with IEEE
No reproduction or networking permitted without license from IHS
Not for Resale

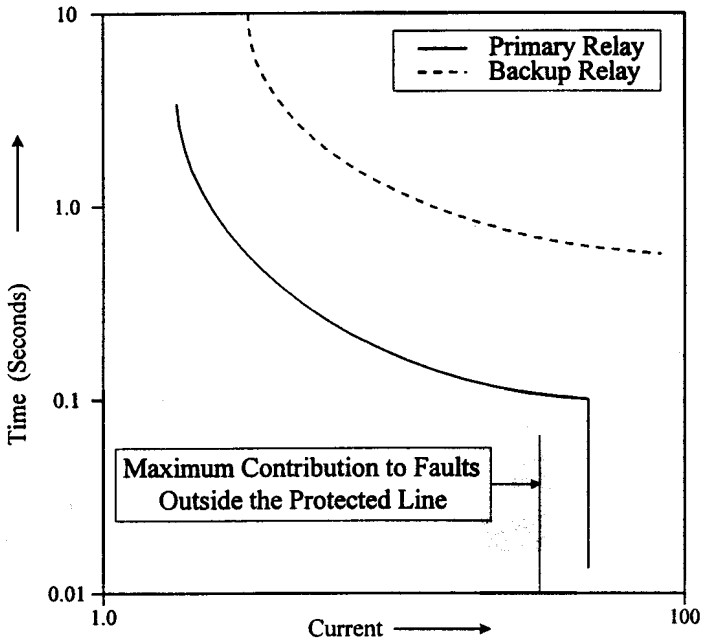

Figure 25—Coordination of time overcurrent relays

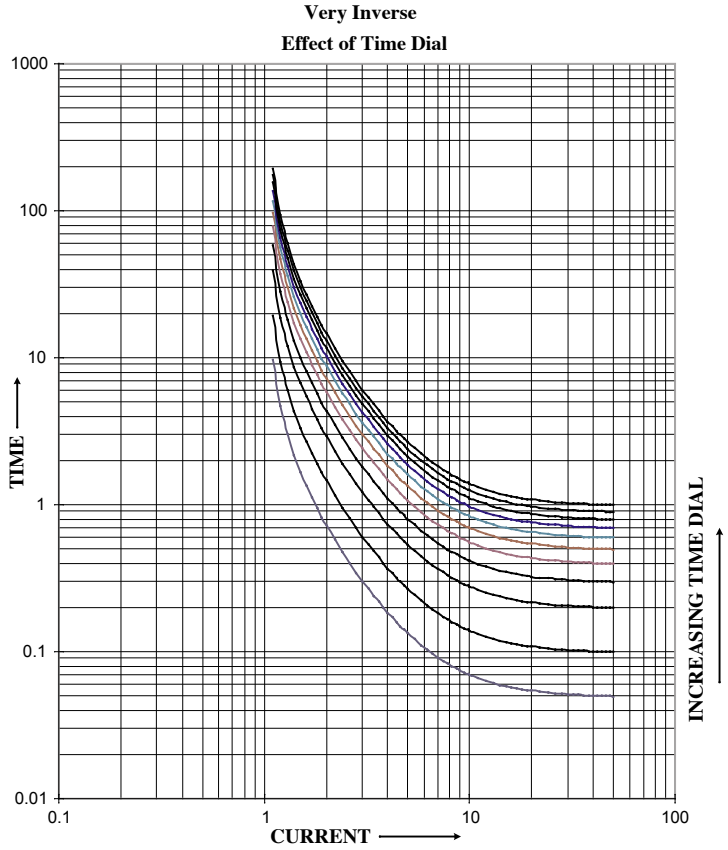

Figure 26—Varying time adjustment on overcurrent relay characteristic curves

Copyright © 2000 IEEE. All rights reserved.

Copyright The Institute of Electrical and Electronics Engineers, Inc.
Provided by IHS under license with IEEE
No reproduction or networking permitted without license from IHS
Not for Resale

5.1.2 Directional overcurrent relay schemes

The basic directional overcurrent relay scheme consists of four time overcurrent relay units or elements—one for each phase and one for residual current. Negative-sequence relay units or elements can supplement the four basic elements where needed. As with the nondirectional overcurrent relay schemes, instantaneous trip units, which themselves may or may not be directional, can be added to the scheme to provide high-speed relay operation for close-in faults. Input currents to these relays are provided from CTs located at the line terminal—one for each phase unit and the sum of the three for the residual unit. Three-phase devices may sum the currents internally to produce negative-sequence and residual operating quantities without the need for additional CT connections.

The time overcurrent and instantaneous units used in directional overcurrent relay schemes are virtually identical in operation and design to those used in nondirectional overcurrent relay schemes, with the exception that the operation of one or both units will be controlled or supervised by the directional unit.

Directional overcurrent relays respond only to faults in one direction. This is accomplished by providing the relay with a measured quantity for reference. This input can be a voltage, a current, or both. Directionality enhances the ability of an overcurrent relay to determine if a fault is within its zone of protection and can allow the relay to be set more sensitive.

As with all overcurrent relays, delays for time coordination with other devices are required. Fault coverage and/or operating times may be affected by network changes. The time delay requirements will often make them unsuitable for stand-alone transmission line protection; they tend to be used on lower voltage networks, especially as protection for ground faults. Sensitive, instantaneous directional ground overcurrent relay elements are often used in pilot scheme applications to provide sensitive ground fault protection.

There are two different ways to utilize directional overcurrent elements. In one method, the directional element supervises the output of the overcurrent element. In this method, the overcurrent element is free to operate for any current in excess of its pickup setting; however, tripping occurs only if the directional element also operates. In the other method, the directional element controls the input to the current measuring portion of the overcurrent element, preventing its operation unless the directional element operates. In an electromechanical relay scheme, for example, a directional relay contact can be installed in the shading coil circuit of an overcurrent relay to control the overcurrent relay operation. This is often referred to as “torque control” because the directional element controls the operating torque of the overcurrent relay.

Both methods, directional supervision and directional torque control, can be accomplished with electromechanical, solid state, and microprocessor-based relays. One advantage of directionally torque controlling the input over supervising the output of an instantaneous overcurrent element is that there is no race between reset of the instantaneous overcurrent element and operation of the directional element during current reversals. The directional element must operate before the instantaneous element can operate.

Phase directional relays are polarized by phase voltage, while ground directional relays employ a variety of polarization methods using either or both zero-sequence and negative-sequence quantities. Negative-sequence polarized directional units are often applied when zero-sequence mutual coupling effects cause zero-sequence directional units to lose directionality.

Zero-sequence voltage is obtained from the broken-delta secondary of grounded-wye VTs that provide the quantity $3V_0$ (see Figure 27). In microprocessor-based relays, the $3V_0$ quantity may be calculated internally from the three-phase voltage inputs. Zero-sequence current polarization is only possible if there is a ground current source at the bus (see 5.4.2).

Copyright © 2000 IEEE. All rights reserved.
Copyright The Institute of Electrical and Electronics Engineers, Inc.
Provided by IHS under license with IEEE
No reproduction or networking permitted without license from IHS
Not for Resale

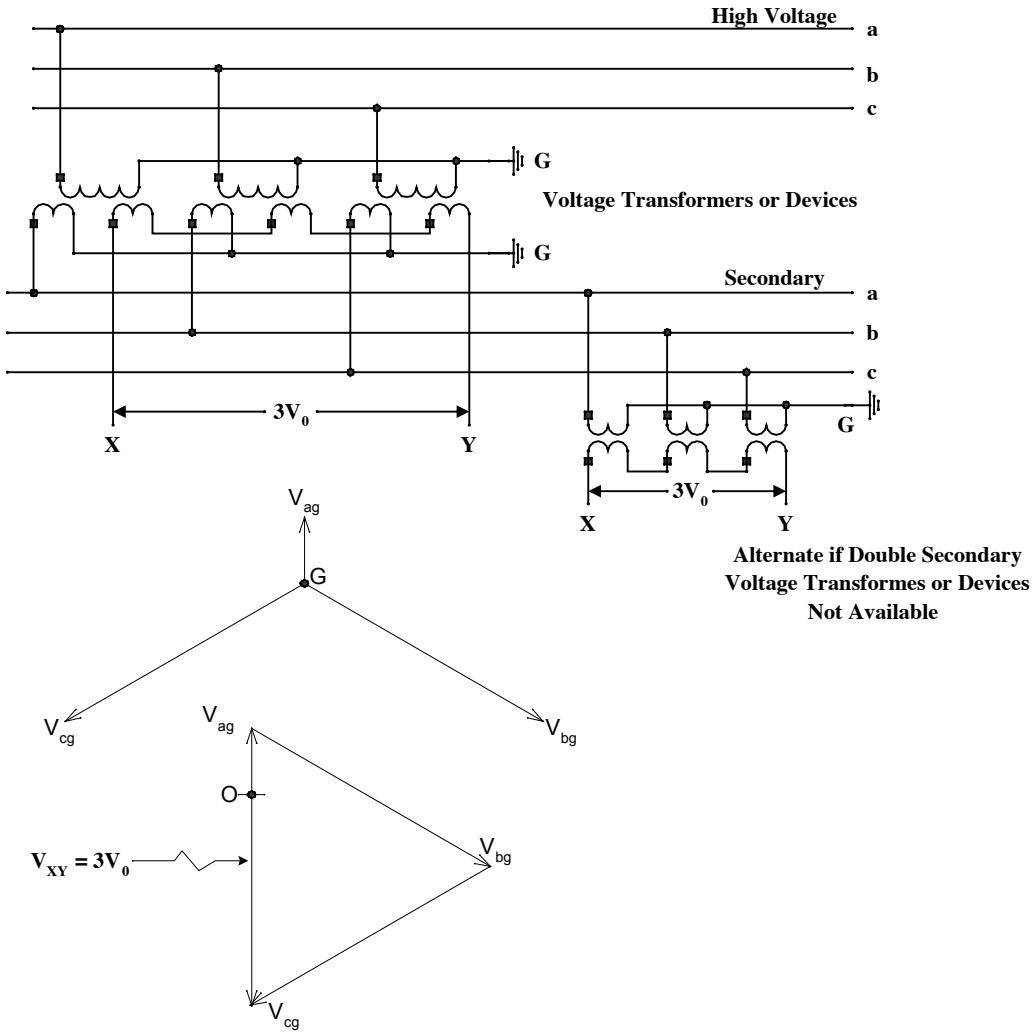

Figure 27—Zero-sequence polarizing voltage source

Phase directional overcurrent relay schemes are used primarily on distribution and subtransmission feeders when fault and/or load current can flow in either direction. Directional relays are required at the terminal having the weaker source behind it, usually the receiving end of the line. The pickup of the time overcurrent elements has to be set higher than maximum load flow in the forward direction, but may be set below the normal load current flow in the reverse direction. The instantaneous element pickup, time current characteristic, and time adjustment setting requirements are similar to those of the nondirectional overcurrent relays, with only faults in the forward direction being considered. Directional ground overcurrent relays are commonly applied on all types of transmission lines. The time overcurrent elements are often used for backup protection. High set instantaneous ground directional elements are often used for direct tripping for close-in ground faults.

--`,,`,,,-`-`,,`,,`,`,,`---
Copyright © 2000 IEEE. All rights reserved.

Copyright The Institute of Electrical and Electronics Engineers, Inc.
Provided by IHS under license with IEEE
No reproduction or networking permitted without license from IHS
Not for Resale

5.1.3 Distance relay schemes

Distance relaying operates by using both voltage and current to determine if a fault is in a relay's zone of protection. This type of relaying is available for both phase and ground fault protection. The characteristics can be described using a R-X diagram. There are numerous differences in relay characteristics. The relays are set according to the positive and zero-sequence impedance of the transmission line. On two-terminal lines without tap lines, the impedance of a transmission line is fixed, and the reach of the relay is largely insensitive to network changes. However, on multiterminal lines and transmission lines with tap lines, the apparent impedance is affected by network changes.

The term “impedance relay” is often used interchangeably with the term “distance relay,” although it is only a convenient convention. Actually, there are several distance relay characteristics, of which the impedance relay is only one. The basic distance relay characteristics are as follows:

a) **Impedance.** The impedance relay does not take into account the phase angle between the voltage and the current applied to it. For this reason, the impedance characteristic in the R-X plane is a circle with its center at the origin. The relay operates when the measured impedance is less than the setting (i.e., it is within the circle). This unit, when used to trip, must be supervised by a directional unit or be time delayed (see Figure 28a).

b) **mho.** The characteristic of the mho relay is a circle whose circumference passes through the origin. The relay operates if the measured impedance falls within the circle (see Figure 28b).

c) **Offset mho.** The characteristic of an offset mho relay in the R-X plane is a circle that is shifted and includes the origin, thus providing better protection for close-in faults. This unit, when used to trip, must be supervised by a directional unit or be time-delayed (see Figure 28c).

d) **Reactance.** The reactance relay measures only the reactive component of impedance. The characteristic of a reactance relay in the R-X plane is a straight line parallel to the R axis. The reactance relay must be supervised by another function to ensure directionality and to prevent tripping under load (see Figure 28d).

e) **Quadrilateral.** The quadrilateral relay characteristic can be achieved by combining directional and reactance characteristics with two resistive reach control characteristics (see Figure 28e).

f) **Lenticular.** The lenticular relay is similar to the mho relay, except it is lens-shaped rather than circular, thus providing less sensitivity to load (see Figure 28f).

Numerous other distance relay characteristics have been designed by combining the above-described basic impedance characteristics. The response of the various characteristics is affected by the polarizing signal.

--`,,`,,,,-`-`,,`,,`,`,,`---
40
Copyright The Institute of Electrical and Electronics Engineers, Inc.
Provided by IHS under license with IEEE
No reproduction or networking permitted without license from IHS
Copyright © 2000 IEEE. All rights reserved.
Not for Resale

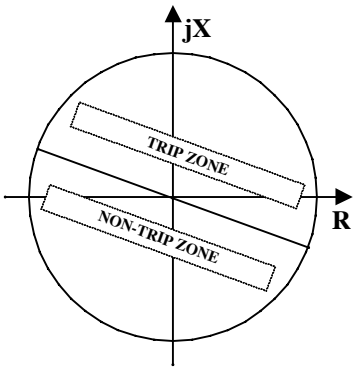

(a) Impedance characteristic

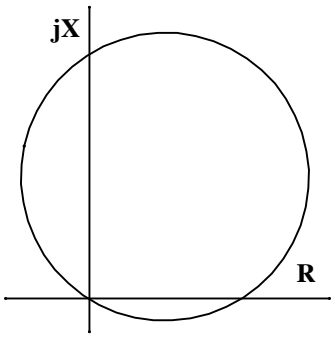

(b) mho characteristic

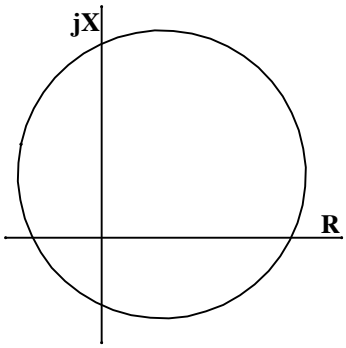

(c) Offset mho characteristic

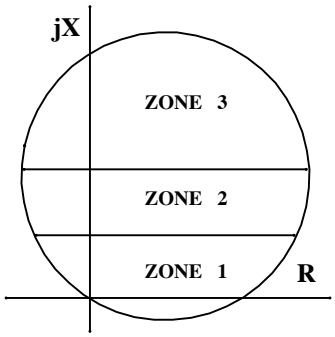

(d) Self-polarized mho and reactance characteristic

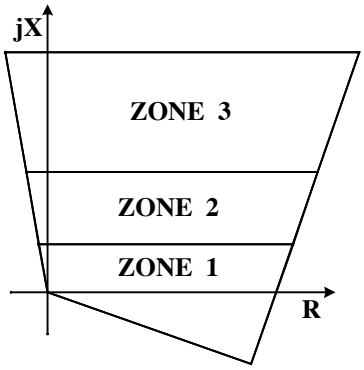

(e) Quadrilateral

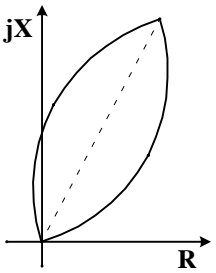

(f) Lenticular

Figure 28—Basic distance relay characteristics

Copyright © 2000 IEEE. All rights reserved.

Copyright The Institute of Electrical and Electronics Engineers, Inc.
Provided by IHS under license with IEEE
No reproduction or networking permitted without license from IHS
Not for Resale

5.1.3.1 Step distance schemes

Non-pilot application of distance relaying is called step distance protection. Several zones are employed to protect a transmission line. The first zone, designated as Zone 1, is set to trip with no intentional time delay. To avoid unnecessary operation for faults beyond the remote terminal, Zone 1 functions are usually set for approximately 80–90% of the transmission line impedance. The intent of making the setting less than the full line impedance setting is to prevent overreaching. This overreaching can be due to the effect of load, the effect of fault impedance, or the effects of minor setting, calibration, or instrument transformer errors.

The second zone, designated as Zone 2, is set to protect the remainder of the line plus an adequate margin. Zone 2 relays need to be time delayed to coordinate with relays at the remote bus. Typical time delays are in the order of 15–30 cycles although, depending on the application, they may be set faster or slower. This time delay prevents instantaneous clearing of the local terminal for faults beyond the remote terminal of the line. The reach setting of Zone 2 may vary considerably, depending on the application. In general, Zone 2 settings should never overreach any Zone 1 relay on a line beyond the remote terminal. If this overreach is unavoidable, the coordination can be maintained by additional time to the Zone 2 that is overreaching, as shown in Figure 29. The minimum setting for the Zone 2 that ensures full coverage of the line, with safety margin, is usually 120% of the line impedance. In some cases, if there is no concern with reaching beyond the Zone 1 elements at the remote terminal, the Zone 2 may be set with a much higher margin. For example, in the case of short lines, settings as high as 200% of the line, or higher, may be helpful in increasing dependability of the protection. In the case of such long reach settings, it may be helpful to consult the relay manufacturer to ensure the setting is suitable.

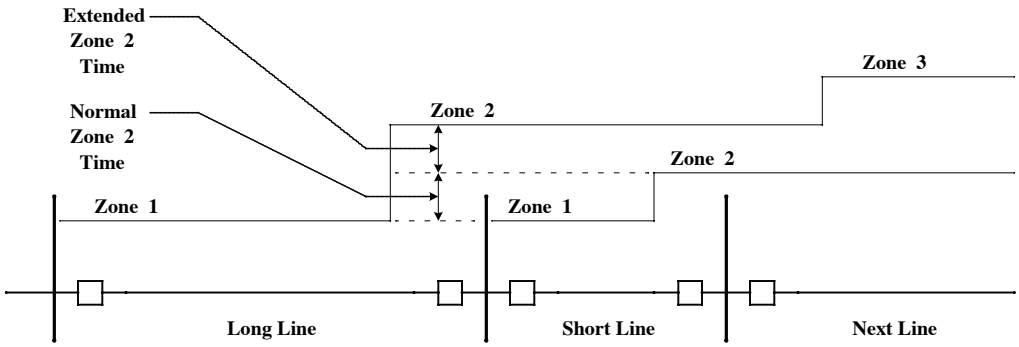

Figure 29—Backup long line to short line

Even though the transmission line is fully protected with Zone 1 and Zone 2 relays, a third forward-reaching zone is often employed. This Zone 3 is applied as backup for Zone 2, and may be applied as remote backup for relay or station failures at the remote terminal. This relay must be time delayed to coordinate with the remote Zone 1 and Zone 2 relays. Sometimes it is necessary to coordinate the Zone 3 relay with overcurrent relays on tapped distribution load. The relay should detect any fault for which it is expected to provide backup and not limit the load carrying capability of the line. The setting of the Zone 3 relay ideally will cover (with adequate margin and with consideration for infeed, if required) the protected line, plus all of the longest line leaving the remote station.

A possible problem with very long Zone 3 (and sometimes Zone 2) settings is that there may be insufficient margin to ensure that the apparent impedance due to heavy load does not undesirably enter the operating characteristic of the distance relay. When considering the apparent impedance of the load, the maximum steady state load is not always the worst case to be considered. It is sometimes necessary to consider the

Copyright © 2000 IEEE. All rights reserved.
Copyright The Institute of Electrical and Electronics Engineers, Inc.
Provided by IHS under license with IEEE
No reproduction or networking permitted without license from IHS
Not for Resale

minimum apparent impedance due to stable system swings, temporary line overloads, and heavy loads under reduced system voltage. If load considerations or other problems prevent a sensitive enough setting, other forms of backup may be applied, or some form of sequential tripping can be investigated. To employ sequential tripping, typically the remote infeed source terminal would have protective relays set to trip and remove the infeed effect. With the infeed removed, the Zone 3 should then be applied to cover the longest remote line with adequate margin.

5.1.3.2 Zone 1 extension distance schemes

The Zone 1 extension scheme requires no pilot channel and derives its name from the fact that the Zone 1 functions are normally extended in reach to see beyond the remote terminal of the transmission line. Simplified logic for the scheme is shown in Figure 30.

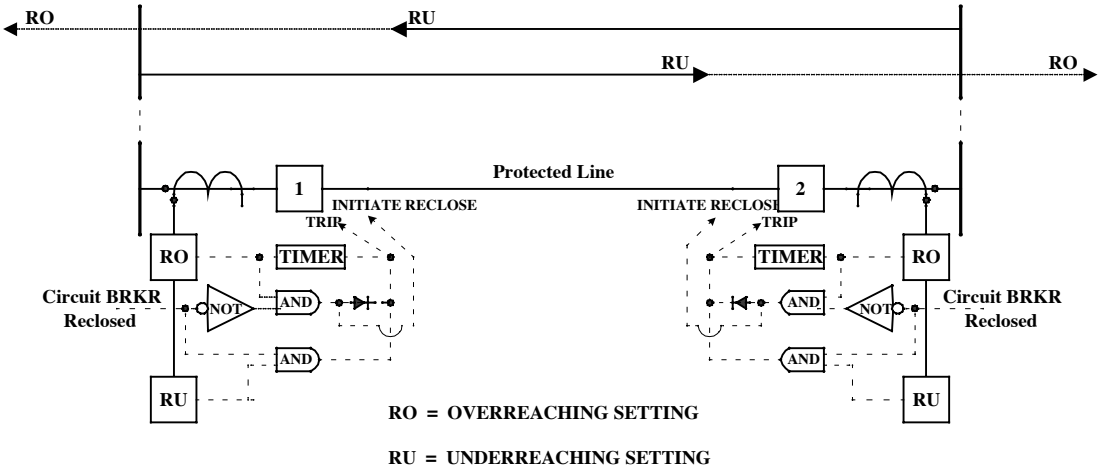

Figure 30—Zone 1 extension

The extension of the Zone 1 functions is controlled by an output from an automatic reclosing relay, which is required to implement the scheme. During normal operating conditions, the automatic reclosing relay will be producing no output; thus, the Zone 1 functions will be extended to reach beyond the remote terminal of the transmission line.

For a fault anywhere on the transmission line, high-speed tripping will be initiated at both terminals of the line. An output from the automatic reclosing relay at each terminal will then close the breakers and cause the functions to be pulled back in reach (typically to 80–90% of the line impedance). If the fault still persists and is within Zone 1 reach from both terminals, both ends will retrip and further reclosing could then be prevented, if so desired. Note that if the fault is still there and lies beyond the pulled back-reach, then tripping cannot be initiated at that terminal unless a form of backup protection is applied to remove the fault.

For a fault that occurs beyond the remote terminal but within reach of the extended Zone 1 reach, all line sections adjacent to the fault (and utilizing this scheme) will be tripped. However, this will cause the reach to be pulled back so that when the breaker is reclosed, the fault (if it still exists) will be beyond the pulled back reach so that automatic reclosing will be successful.

The scheme is dependable because it will provide fast tripping for faults anywhere on the transmission line without the use of a communications channel. It is insecure because it will trip for all external faults within

Copyright © 2000 IEEE. All rights reserved.

Copyright The Institute of Electrical and Electronics Engineers, Inc.
Provided by IHS under license with IEEE
No reproduction or networking permitted without license from IHS
Not for Resale

reach of the extended Zone 1 functions. Note that all lines within reach of a common fault, and using this type of scheme, will be tripped simultaneously for that fault. Time-delayed tripping must be relied upon when reclosing into a fault beyond the pulled back Zone 1 functions. It cannot be used to provide time-delayed backup tripping for faults on adjacent lines.

5.2 Pilot schemes

Pilot schemes use communications channels to send information from the local relay terminal to the remote relay terminal. This information allows high-speed tripping to occur for faults occurring on 100% of the protected line. Both current comparison schemes and directional comparison schemes are common. Current comparison systems send information related to phase angle and, in some cases, the magnitude of the power system currents between relay locations. Directional comparison schemes send fault current directional information between the terminals.

5.2.1 Current differential scheme

In a current differential scheme, a true differential measurement is made. Ideally, the difference should be zero or equal to any tapped load on the line. In practice, this may not be the case due to CT errors, ratio mismatch, and line charging current. Information concerning both the phase and magnitude of the current at each terminal must be available at all terminals in order to prevent operation for external faults. Thus, a current differential scheme requires a communications medium suitable for the transmission of this data. A current differential scheme can operate for internal faults—even for zero infeed at one or more of the terminals—provided the total current is greater than the sensitivity of the relaying system.

There are two main types of current differential relaying. The first type combines the currents at each terminal into a composite signal and compares these composite signals through a communication channel to determine if a fault is present within the line section. The second type samples individual phase currents, converts the current to a digital signal, and transmits these signals between terminals using a wide-band channel to determine if a fault is present within the line section.

Current differential schemes tend to be more sensitive than the distance type schemes, since they respond only to the current. This tends to make them more dependable, but at a cost to security, because they will be exposed to more external faults. Integrity of the communications channel is very important to the operation of current differential schemes and, for this reason, the communications channel should be highly reliable. Since current-only schemes require no potential to operate, they are not affected by system swing conditions or any problems introduced via the potential inputs, such as a fuse failure. On the other hand, there are no inherent remote backup capabilities because of the lack of potential inputs required for distance determinations.

The current differential schemes often include the channel interface. Communications media are metallic pilot wires, audio tones over leased telephone pairs, audio tone channels via microwave, and fiber optic. Power line carrier channels are generally not used for current differential relaying due to channel bandwidth requirements. The information exchanged may be power system frequency signals, audio tones, or digital data.

5.2.2 AC pilot-wire relays

Traditional pilot-wire relays use a metallic pilot-wire pair for the communications medium. These relays communicate via power system frequency signals on the pilot-wire. Pilot-wire relays are traditionally used on short lines, are easy to apply, and have the additional advantage of no voltage source requirement. The traditional electromechanical pilot-wire relays are one of two basic types: circulating-current and opposed-voltage (see Figure 31) (Elmore [B21], and Neher and McConnell [B45]).

Copyright © 2000 IEEE. All rights reserved.
Copyright The Institute of Electrical and Electronics Engineers, Inc.
Provided by IHS under license with IEEE
No reproduction or networking permitted without license from IHS
Not for Resale

In each type, blending networks convert the three-phase and residual current to a single quantity in order to use just two pilot-wires. Care must be taken to protect against the dangers associated with ground potential rise.

Some users have converted pilot-wire relays from metallic pair to optical fibers by using fiber interface relays. This has been done primarily to avoid the problems of ground potential rise and induced voltages.

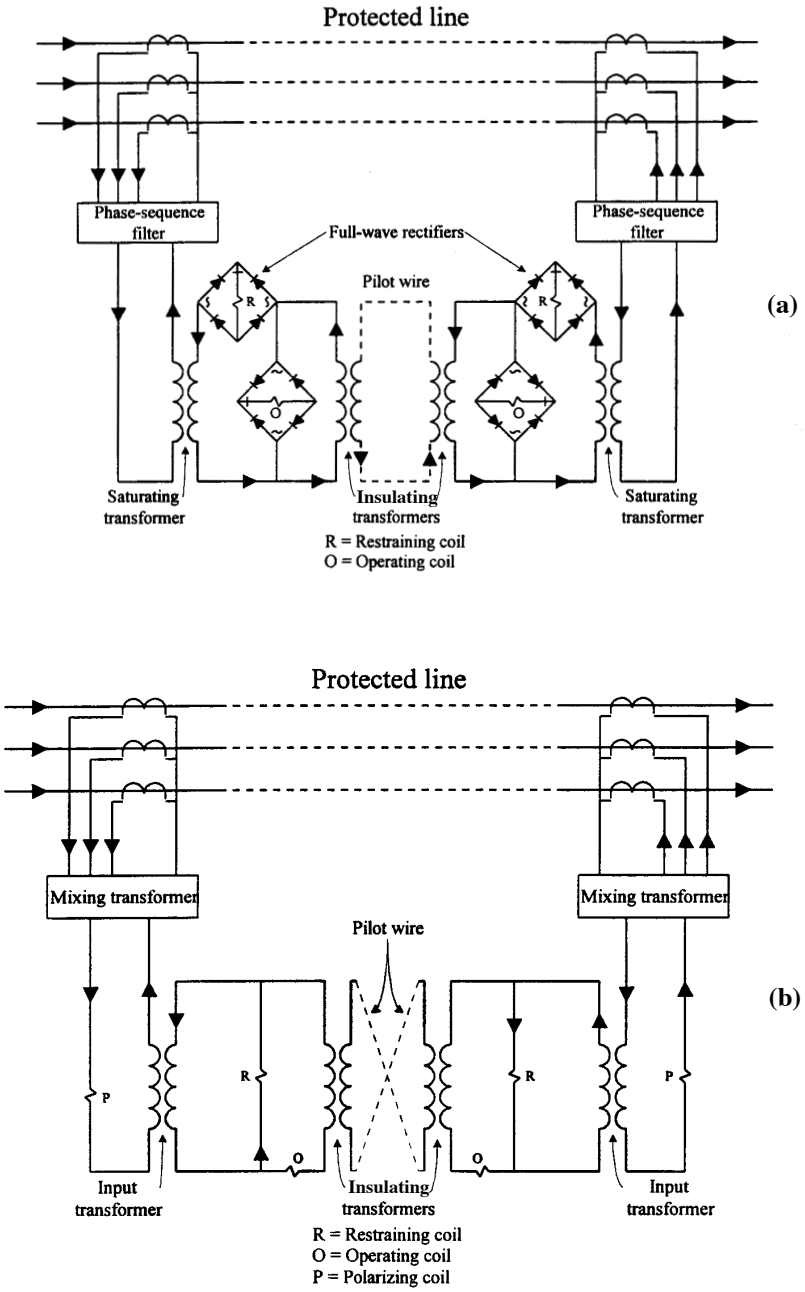

Figure 31—Simplified schematic connections of (a) a circulating-current pilot-wire; (b) an opposed-voltage pilot-wire

Copyright © 2000 IEEE. All rights reserved.

Copyright The Institute of Electrical and Electronics Engineers, Inc.
Provided by IHS under license with IEEE
No reproduction or networking permitted without license from IHS
Not for Resale

5.2.3 Phase comparison schemes

Phase comparison compares the phase angle of the fault currents at the two terminals of the protected line. With the R1 relays and CTs connected as shown in Figure 32, if the two currents are essentially equal and 180° out-of-phase, the relays detect an external fault and do not initiate a trip. If these two currents are essentially in phase, the relays detect it as an internal fault and initiate a trip to the appropriate breakers. To do the comparison, a secure communication channel must exist between the two ends. This channel may be over any medium desired; i.e., power-line carrier, metallic pair, leased telephone lines, microwave, or fiber optics.

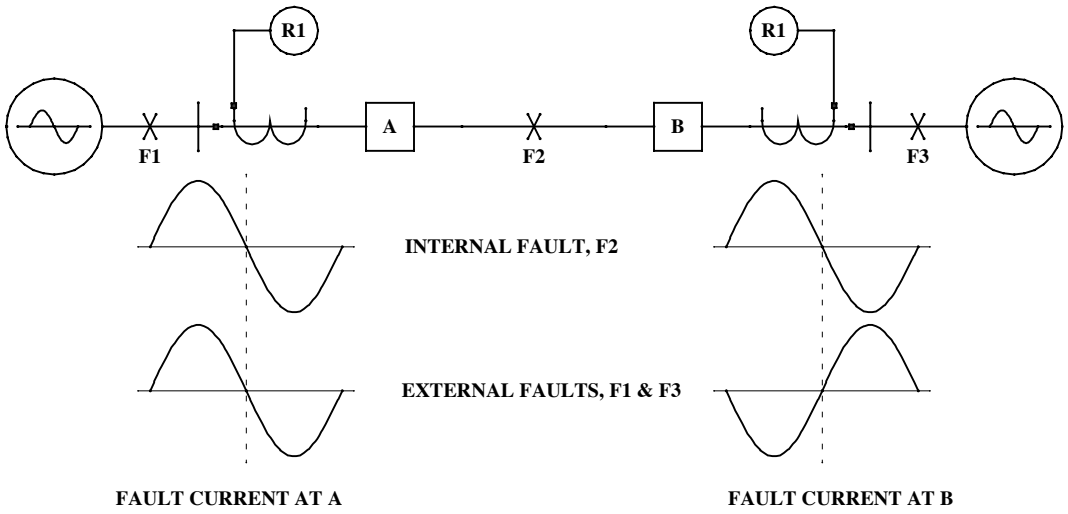

Figure 32—Phase comparison relaying

Phase comparison systems need only inputs from the CTs associated with the line terminals and the communication channel. Except for the segregated phase comparison system, a composite sequence filter current network provides a single-phase voltage output proportional to positive, negative, and zero-sequence current input. During a fault condition, the relay converts the single-phase voltage output to a square wave (local square wave) to key the channel to the remote terminal and for comparison with the received signal (remote square wave). Relay logic delays the local square wave by the amount equal to the channel time to provide a more accurate comparison.

Phase comparison can be configured with either blocking or permissive scheme logic. If a power line carrier is the communication medium, then blocking or unblocking, which is a special type of permissive scheme, is generally used.

5.2.3.1 Single-phase comparison

For single-phase comparison, the relay compares the local square wave and the received remote square wave on one half-cycle. This is accomplished at each terminal of the line. When configured in a blocking mode, this system requires two fault detectors and a pilot channel. The carrier start fault detector allows the local square wave to key the on-off carrier. The other fault detector supervises the tripping. The carrier start is set to be more sensitive than the tripping unit.

If an internal line fault causes a channel failure, the phase comparison blocking system will produce a TRIP output, because this logic allows tripping without receipt of the remote square wave. There is a possible trip-

Copyright © 2000 IEEE. All rights reserved.
Copyright The Institute of Electrical and Electronics Engineers, Inc.
Provided by IHS under license with IEEE
No reproduction or networking permitted without license from IHS
Not for Resale

ping delay of one half-cycle because comparison is only every positive half-cycle. For an external fault, the remote signal is received and the comparison blocks tripping.

Single-phase comparison, when configured in permissive mode, requires one fault detector, a pilot channel, and breaker status logic (or a low set current detector). The sequence current fault detector allows the local square wave to key the channel on and off at 60 Hz during a fault. A trip condition is satisfied when the local and remote received square waves are essentially in phase. An open line terminal will cause a constant permissive signal to be sent, thus allowing the closed end to trip for a faulted line. This form of phase comparison is very secure in that a loss of channel will prevent tripping in error. A dependable channel, such as direct on baseband analog microwave, should be used.

5.2.3.2 Dual-phase comparison

The dual-phase comparison system, which require a duplex channel, compares on both half-cycles of the power system sine wave, providing statistically faster tripping times than the single-phase comparison system. This type of system requires frequency-shift channel equipment. Dual-phase comparison provides continuous signal transmission and, therefore, eliminates the requirement for the carrier start relay (see Figure 33).

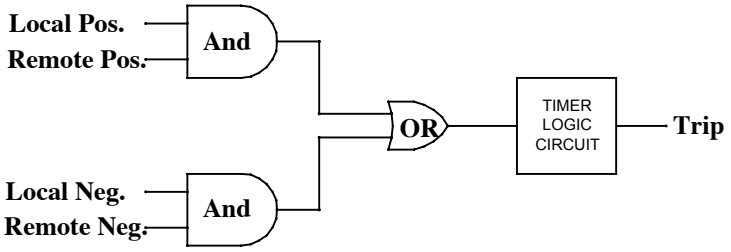

Figure 33—Dual-phase comparison trip logic

During a fault, when the local square wave goes positive, it keys the carrier to its “mark” frequency. When the square wave is negative, it keys the carrier to its “space” frequency. Comparison of the local square wave to the received frequency from the remote line terminal determines if the fault is internal or external to the protected line section. Relay logic allows delaying the local square wave by an amount equal to the channel time, as in the single-phase comparison system. When using the power line carrier, the signal may be lost due to an internal fault. For this reason, the unblocking version of the permissive scheme should be applied (see 5.2.4.6).

5.2.3.3 Segregated phase comparison

Segregated phase comparison systems work in a similar manner to the systems described above, except the composite sequence filter current network is eliminated. Square wave representations of phase currents are transmitted to the remote end, where they are compared to the locally generated square waves for coincidence. The comparison is done on each half-cycle. If the waves are coincident for more than 4 ms, a decision is made to trip.

In applications with a strong source at one end of a line and a weak source at the other, an internal fault may not cause the load current at the remote (weak feed) end to reverse direction. A scheme that looked at phase relationships only, seeing no current reversal, would not detect this fault. Through the use of offset keying, the relay acts like a current differential relay in how the local and remote square waves are derived. In so doing, the width of the waveform becomes a function of the magnitude of the current. The trip decision is

Copyright © 2000 IEEE. All rights reserved.

Copyright The Institute of Electrical and Electronics Engineers, Inc.
Provided by IHS under license with IEEE
No reproduction or networking permitted without license from IHS
Not for Resale

still based on the coincidence of the local and remote square waves. Since magnitude information is present in the system, the relay responds properly to outfeed conditions. Since phase information is kept separately, this system lends itself to single-phase trip schemes.

5.2.4 Directional comparison schemes

Directional comparison schemes frequently use distance relay functions that are inherently directional and directional ground overcurrent relays. The following issues are important when setting such relays for use in directional comparison schemes.

As far as distance relays are concerned, Zone 1 relays are set using the same principles as stepped distance schemes to underreach the remote terminals (see 5.1.3.1). Zone 2 relays are usually set to overreach the protected line with at least the same amount of margin as in the case of stepped distance schemes. However, the concern for coordination with relays at the remote terminal protecting other equipment is not applicable in pilot schemes. If the Zone 2 relay in a pilot scheme does not also trip directly through a timer, it may be set to overreach the line with greater margin than in the case of a stepped distance scheme. There is no need to consider step time coordination with other protection systems, because pilot-assisted Zone 2 relays will not trip for faults in adjacent equipment. If there is no concern for operating on load, Zone 2 relays in pilot-assisted schemes that are set to overreach with large margins may provide faster tripping than if a minimum margin is used. The use of a minimum margin reduces the possibility of a false trip in the case of failure to receive the blocking signal.

As far as directional ground overcurrent relays are concerned, these relays normally operate instantaneously, or nearly instantaneously in pilot schemes. Overcurrent relays that are intended to underreach (similar to the Zone 1 distance relay) can, and do, trip directly and instantaneously. These relays must be set to not operate for any fault external to the line under any system condition. Phase and/or ground overcurrent functions may be applied. The setting of all underreaching, instantaneous overcurrent relays is complicated if system impedances and infeeds can change significantly under normal operating conditions. The setting of underreaching, zero-sequence, ground instantaneous overcurrent functions is also complicated by the presence of mutually coupled lines (see 5.4.4). The main consideration in setting RO directional ground overcurrent functions is that they not operate due to normal steady state unbalances. Since steady state unbalances are usually quite small, overreaching ground overcurrent relays may be set quite sensitively, and operate for many faults remote from the protected line. Similar to the case for the RO distance function, the RO ground overcurrent function will rely on pilot logic to prevent operation for external faults.

In the case of pilot schemes using reverse-looking elements, it is important that the reverse-looking function be set to “see” at least as far behind the terminal as the forward-looking RO function at the remote terminal. Such a setting will ensure that the reverse-looking blocking function will always work if required to prevent undesired tripping of the forward-looking function. The reverse-looking distance relay element setting should include adequate margin to ensure that it actually “sees” further than the remote forward-looking relay. Reverse-looking overcurrent elements should be set more sensitively than the remote forward-looking overcurrent element to ensure a positive sensitivity margin. The positive sensitivity margin is required for forward and reverse overcurrent elements in a pilot scheme, because the line impedance does not affect the relative magnitude of current in each terminal for an external fault. For three-terminal lines, where fault current may flow out of two terminals for an external fault, this division of fault current must be considered in setting the reverse-looking relay elements to ensure a positive sensitivity margin. In all cases, the speed and characteristics of reverse-looking elements should be checked to ensure they will be at least as fast and sensitive as the remote forward-looking elements.

5.2.4.1 Direct underreaching transfer trip

The simplified logic for a DUTT scheme is shown in Figure 34. This scheme requires underreaching (RU) functions only, and is usually applied with a frequency shift keying (FSK) channel. With this type of channel, the GUARD frequency is transmitted during quiescent conditions, and the transmitter is keyed to the

Copyright © 2000 IEEE. All rights reserved.
Copyright The Institute of Electrical and Electronics Engineers, Inc.
Provided by IHS under license with IEEE
No reproduction or networking permitted without license from IHS
Not for Resale

TRIP frequency whenever one of the RU functions operate. Phase distance functions are used almost exclusively for the detection of multiphase faults, whereas ground distance or directional ground overcurrent functions can be used for the detection of ground faults. The RU functions must overlap in reach, otherwise there would be a dead zone on the line where no faults would be detected. Consequently, it may not be possible to use directional ground overcurrent functions because it may not be possible to set them to provide the required overlap.

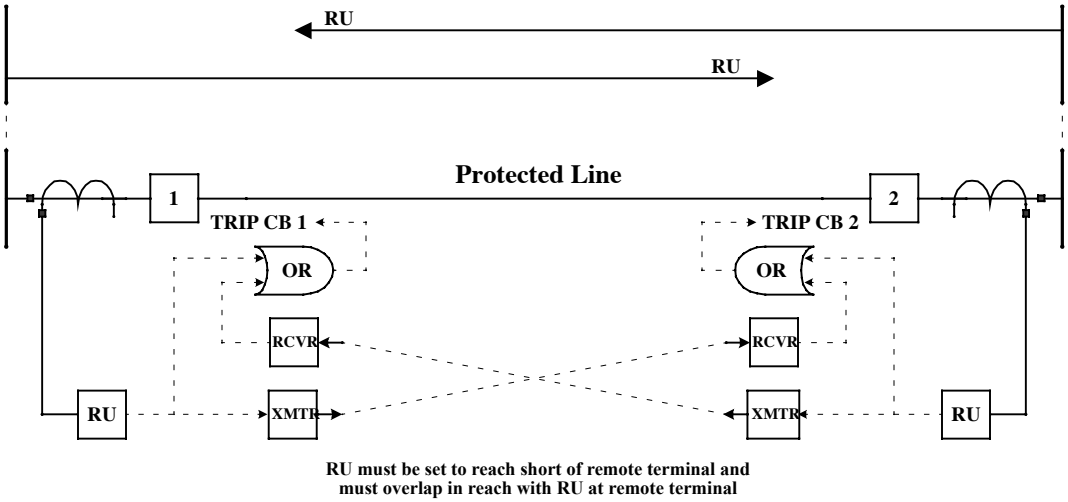

Figure 34—DUTT scheme

For internal faults within the overlap zone, the RU functions at each end of the line will operate and trip the breaker directly. At the same time, the RU function will key its respective transmitter to send a direct transfer TRIP signal to the remote terminal of the line. Receipt of the TRIP signal will also initiate tripping of the breaker.

The scheme will trip at high speed for close-in faults. Conversely, it will not provide tripping for faults beyond the reach of the RU functions if the remote breaker is open or if the remote channel is inoperative. If only one communications channel is used at each terminal, security may be jeopardized because any erroneous output from the channel would initiate an instantaneous trip. For this reason, this scheme is often applied with dual channels, where both outputs must initiate trip to provide security. Security can be further enhanced by requiring that one channel shift up in frequency, while the other channel shifts down in frequency to initiate a trip. Time-delayed backup tripping functions are added to trip the line for faults beyond the reach of the RU functions when the remote breaker is open. Because the GUARD signal is transmitted continuously, the channel can be monitored on a continuous basis; therefore, channel check-back equipment is not required.

5.2.4.2 Permissive underreaching transfer trip

The PUTT scheme requires both overreaching (RO) and RU functions. This scheme is identical to the DUTT scheme, except that all pilot tripping is supervised by units having a Zone 2 reach. Open breaker keying of the transfer trip transmitter should be used as discussed in 5.2.4.3. Simplified logic for the PUTT scheme is shown in Figure 35.

--`,,`,,,,-`-`,,`,,`,`,,`---
Copyright © 2000 IEEE. All rights reserved.

Copyright The Institute of Electrical and Electronics Engineers, Inc.
Provided by IHS under license with IEEE
No reproduction or networking permitted without license from IHS
Not for Resale

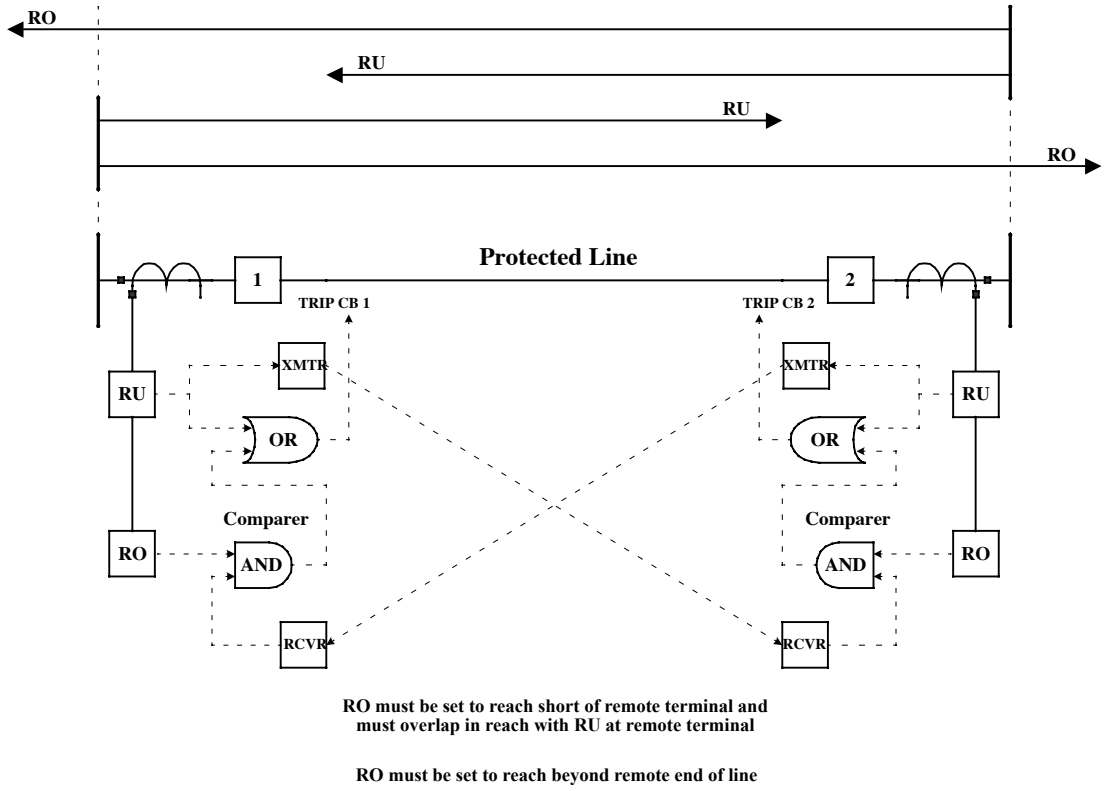

Figure 35—PUTT scheme

5.2.4.3 Permissive overreaching transfer trip

The POTT scheme requires RO functions. Phase distance functions are used almost exclusively for the detection of multiphase faults, whereas ground distance functions or directional ground overcurrent functions can be used for the detection of ground faults. The POTT scheme is usually applied with a frequency shift (FSK) channel, in which the GUARD frequency is sent in standby and the transmitter is keyed to the TRIP frequency by an output from any one of the RO functions. Simplified logic for the POTT scheme is shown in Figure 36.

For a fault anywhere on the protected line, both of the RO functions will operate and apply one of the inputs to the comparator. At the same time, overreaching will also key the transmitter to the TRIP frequency. Receipt of the TRIP frequency at each terminal and an output from the RO function will cause the comparator to produce an output to initiate tripping. For external faults, the RO functions at only one end of the line will operate; thus, tripping will not be initiated at either terminal.

Copyright © 2000 IEEE. All rights reserved.
Copyright The Institute of Electrical and Electronics Engineers, Inc.
Provided by IHS under license with IEEE
No reproduction or networking permitted without license from IHS
Not for Resale

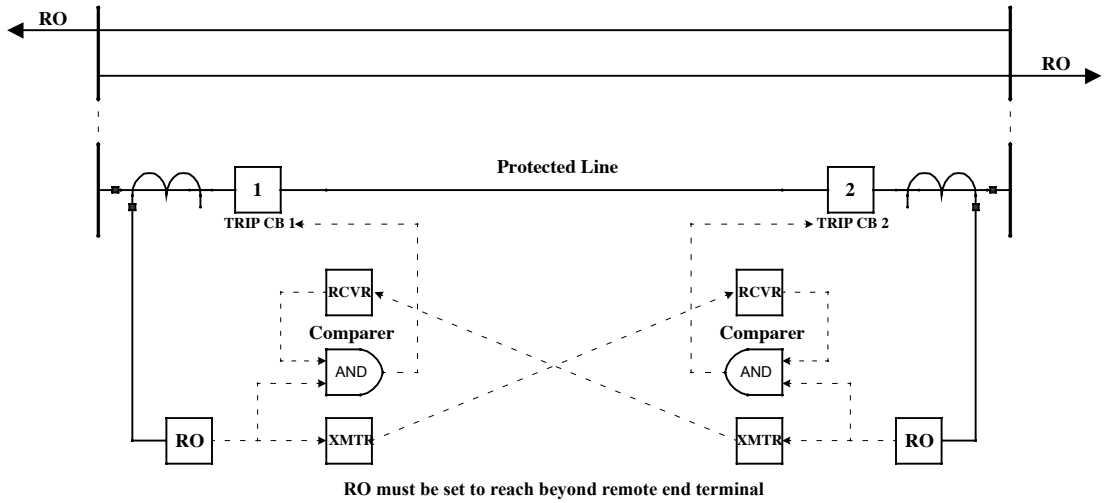

Figure 36—POTT scheme

The scheme is very secure in that it will not trip for any external fault if the channel is inoperative. Conversely, the scheme is lacking in dependability because it will not trip for any internal faults if the channel is inoperative. The scheme will not trip for any fault if the fault is not detected at all terminals of the line. The scheme may not trip at high speed for close-in faults at the strong terminals, because the fastest tripping time that can be expected depends on the slowest function to operate for an internal fault. Some means must be used to key the transmitter at an open breaker if tripping is to be initiated for faults seen at the other terminals. Breaker 52b switch keying with echo is commonly used to provide this requirement. Breaker 52b switch keying is inherently delayed 1–2 cycles to prevent a line trip for a relay trip of the remote breaker for an external line or bus fault. Time-delayed backup tripping can be provided because the scheme uses RO functions. Because the GUARD signal is transmitted continuously, the channel can be monitored on a continuous basis.

5.2.4.4 Zone acceleration

Simplified logic for the zone acceleration scheme is shown in Figure 37. This scheme requires the use of RU functions that have the capability to be switched in reach by the receipt of a TRIP signal from the remote terminal of the line. The RU functions must be set to overlap in reach to avoid a dead spot on the line. This generally requires the use of ground distance functions for the detection of ground faults, whereas phase distance functions are used for the detection of multiphase faults. The scheme is usually applied with an FSK channel. The channel is operated at the GUARD frequency during quiescent conditions and is keyed to the TRIP frequency by operation of any of the RU functions.

Copyright © 2000 IEEE. All rights reserved.

Copyright The Institute of Electrical and Electronics Engineers, Inc.
Provided by IHS under license with IEEE
No reproduction or networking permitted without license from IHS
Not for Resale

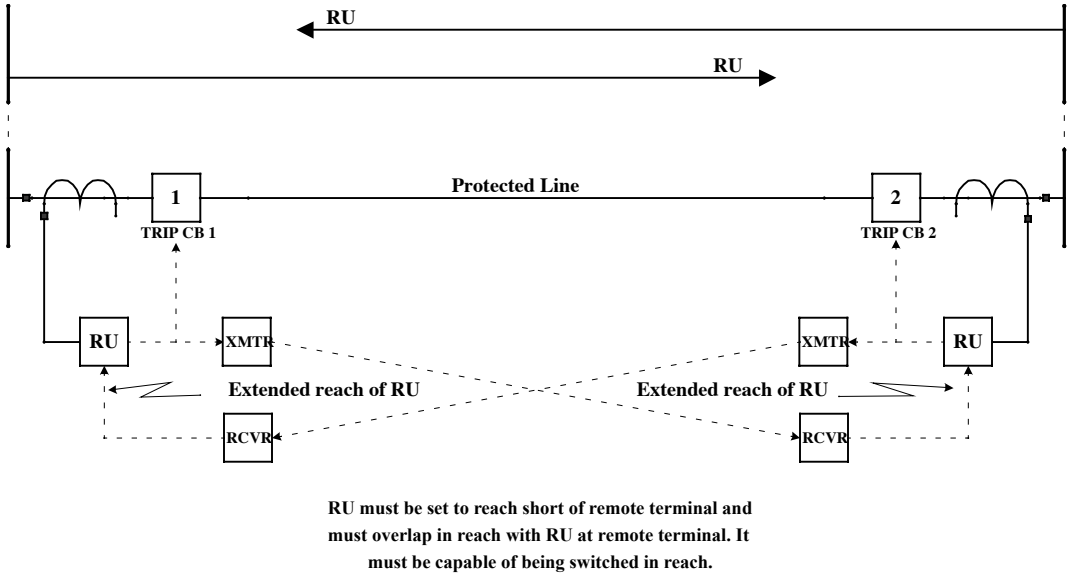

Figure 37—Zone acceleration scheme

For an internal fault within the overlap zone of the RU functions, tripping is initiated directly and the channel is keyed to the TRIP frequency. Receipt of the TRIP frequency extends (accelerates) the reach of the RU functions to something greater than the line impedance. This extension in reach has no further effect because tripping has already been initiated at each terminal of the line. For an internal fault near one terminal, the RU function at that terminal will operate and trip directly, while also keying its transmitter to the TRIP frequency. Receipt of the TRIP frequency at the other terminal will extend the reach of the RU function there, which will then detect the fault to initiate tripping. For external faults, none of the RU functions will operate; therefore, tripping will not be attempted at any terminal.

This scheme is very secure because it will not trip for any external faults regardless of the state of the channel. Conversely, it will not trip for end zone faults if the channel is inoperative. Time-delayed backup will have to be relied on to trip for this condition. High-speed tripping will be provided at the strong terminals for close-in faults. Tripping for end zone faults depends on the operation of the remote RU function; it is then delayed by the channel operating time, propagation time, and operating time of the extended RU function. Because the GUARD signal is transmitted continuously, the channel can be monitored on a continuous basis.

5.2.4.5 Directional comparison blocking

Simplified logic for a directional comparison blocking scheme is shown in Figure 38.

The scheme requires overreaching tripping functions (RO) and blocking functions (B), as shown. Distance functions are used almost exclusively for multiphase fault protection, whereas either ground distance functions or ground directional overcurrent functions can be used for the detection of ground faults. An (OFF-ON) communications channel is typically used with this type of scheme. The power line itself is nearly always used as the communications medium. Audio tone over leased phone lines, microwaves, and fiber optic media are also applied. The transmitter is normally in the OFF state for quiescent conditions and is keyed to the ON state by operation of any one of the blocking functions. Receipt of a signal from the remote terminal applies the NOT input to the comparator to BLOCK it from producing an output.

Copyright © 2000 IEEE. All rights reserved.
Copyright The Institute of Electrical and Electronics Engineers, Inc.
Provided by IHS under license with IEEE
No reproduction or networking permitted without license from IHS
Not for Resale

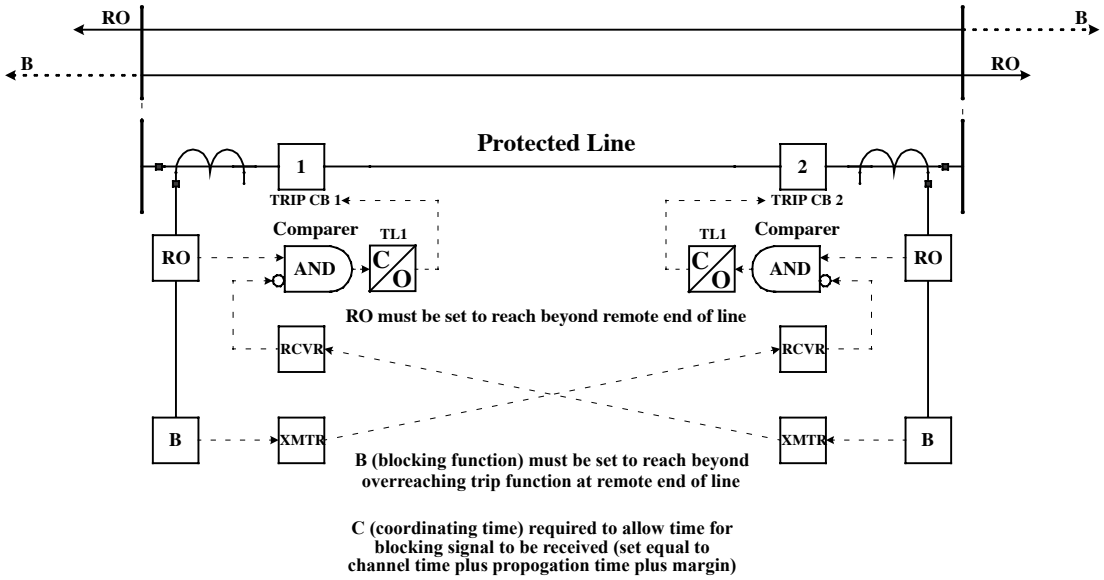

Figure 38—Directional comparison blocking scheme

The tripping functions must be set to reach beyond the remote terminal of the transmission line with margin so that they will be able to detect a fault anywhere on the transmission line. The blocking functions are used to detect any fault not on the protected line that the remote tripping functions are capable of detecting; therefore, they must be set to reach further behind the terminal than the tripping function at the remote terminal.

For a fault external to the protected line, one or more of the blocking functions will operate to key its respective transmitter to send a blocking signal to the remote terminal. Receipt of the blocking signal will block tripping in the event that one of the tripping functions had operated for the remote fault. The coordinating timer TL1 is required to allow time for a blocking signal to be received from the remote terminal. It is set to compensate for channel time, signal propagation time, and for any difference in operating time that might result if the remote blocking function is slower than the local tripping function.

The coordination problems between the blocking function at one terminal and the tripping function at the remote terminal will be minimized if both functions operate on the same principle. If this is the case, the blocking function will be at least as fast as, or faster than, the tripping function that is further away from the fault. Some directional comparison blocking schemes use a nondirectional element to start the carrier block signal, particularly for ground faults, and then use a forward directional element to stop (or squelch) the carrier block signal. In application, this may allow faster tripping by setting timer TL1 shorter, since nondirectional elements are usually faster than directional elements.

For a fault anywhere on the transmission line, one or more of the tripping functions at each terminal will operate and apply the upper input to its respective comparator (AND). The blocking functions will not operate, or will be prevented from operating, for any internal fault; the tripping functions take control for all internal faults. Thus, neither transmitter will be keyed, so that there will be no output from either receiver. The comparator at each terminal will produce an output that will cause TL1 to time out and initiate tripping.

This scheme is very dependable because it will operate for faults anywhere on the protected line even if the communications channel is out of service. Conversely, it is lacking in security because it will overtrip if the channel is not working for external faults within reach of the tripping functions. It does not require breaker

Copyright © 2000 IEEE. All rights reserved.

Copyright The Institute of Electrical and Electronics Engineers, Inc.
Provided by IHS under license with IEEE
No reproduction or networking permitted without license from IHS
Not for Resale

52b switch keying, or any other means of switch keying, when the remote breaker is open to permit tripping for faults anywhere on the line. It provides high-speed tripping (dependent on coordinating time delay) for most source and line conditions. However, it may not trip weak terminals of the transmission line if fault levels are below the sensitivity of the tripping relays. Because the channel is required to be keyed only during external faults, there is no way to monitor the channel continuously. A channel check-back system must be used if it is desired to check the channel on a periodic basis. The RO functions can be used to drive timers so that time-delayed backup tripping can be provided for faults within reach of the RO functions.

5.2.4.6 Directional comparison unblocking

When the power line is used as the communication medium with a permissive overreaching (POR) directional comparison scheme, the possibility exists that the carrier signal may be attenuated or lost as a result of the fault. If this were to occur, tripping would not be permitted because the permissive signal would be lost. To overcome this possibility, unblocking logic can be provided in the receiver. When the signal is lost, the unblocking logic will produce a TRIP output from the receiver that will last for a short period of time (typically 150–300 ms).

If the signal loss is due to a fault, at least one of the RO permissive trip functions will be picked up. Thus, tripping will be initiated when the unblocking output is produced. If none of the permissive trip functions are picked up, the channel will lock itself out 150–300 ms after the signal is lost and will stay locked out until the GUARD signal returns for a preset amount of time.

5.2.4.7 Directional comparison hybrid (unblocking scheme with echo logic)

The directional comparison hybrid scheme uses both tripping and blocking functions, as does the blocking scheme. Phase distance functions are used almost exclusively for the detection of multiphase faults, whereas ground distance functions or directional ground overcurrent functions may be used for the detection of ground faults. The channel is keyed by the RO functions or by the receipt of a TRIP signal from the remote terminal, with no concurrent output of the blocking functions (B) at the local terminal. The latter method of keying is referred to as “channel repeat” or “echo” keying. Simplified logic for the hybrid scheme is shown in Figure 39.

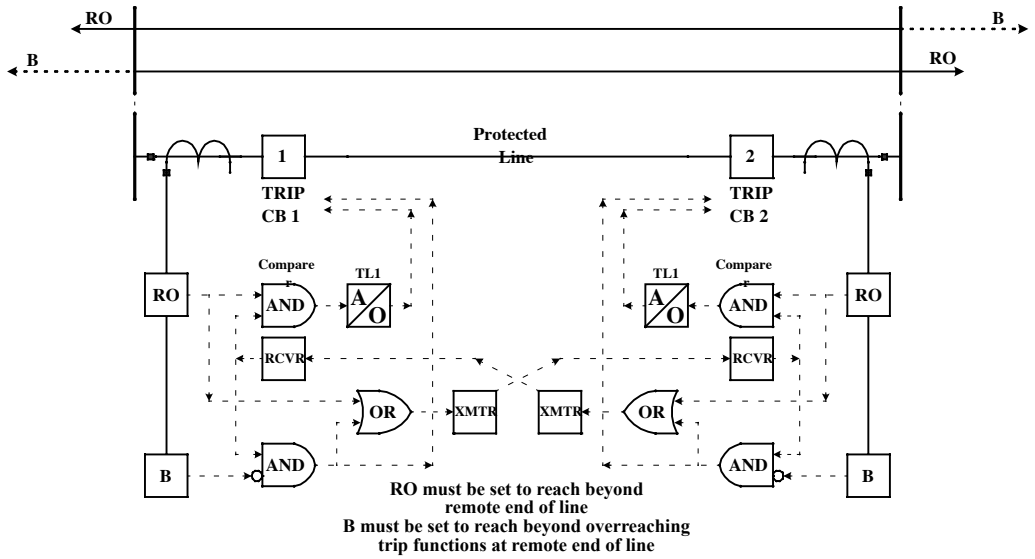

Figure 39—Directional comparison hybrid scheme

Copyright © 2000 IEEE. All rights reserved.
Copyright The Institute of Electrical and Electronics Engineers, Inc.
Provided by IHS under license with IEEE
No reproduction or networking permitted without license from IHS
Not for Resale

For an internal fault that is detected by the RO functions at each terminal of the line, the scheme works just like a POTT scheme. The RO functions key their respective transmitter and initiate tripping when the TRIP signal is received from the remote terminal. This scheme, unlike the POTT scheme, will initiate a trip when only one terminal detects the fault. This comes about through the echo circuit. For example, consider a fault on the line that is detected by the RO function at terminal 1 only (Breaker 2 might be open, or the source at terminal 2 might be very weak). The RO functions at terminal 1 will send a TRIP signal to terminal 2, wherein the transmitter will be keyed by the receipt of this TRIP signal, and Breaker 2 will be tripped because the blocking relay elements have not operated. Thus, the hybrid scheme, in this respect, works in a similar manner to the blocking scheme.

For an external fault, one or more of the RO functions will operate and key the respective transmitter to the TRIP frequency. Receipt of the TRIP signal will not cause tripping at the remaining terminals because none of the RO functions will have operated there. The received TRIP signal will not be repeated because one or more of the blocking functions will have operated for this fault to block the repeat.

5.2.5 Superimposed principle relay and directional traveling wave relay

5.2.5.1 Superimposed principle relay

Consider the single-phase network of Figure 40.

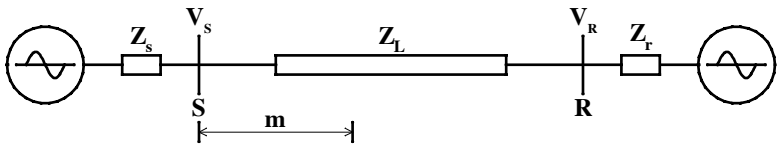

Figure 40—Single-phase network

Following a fault on the line, the incremental impedances, *Z*, can be computed as follows (Benmouyal and Chano [B37]):

$$\Delta Z = \frac{\Delta V}{\Delta I} = \frac{V_{fault} - V_{prefault}}{I_{fault} - I_{prefault}} \quad (1)$$

where

ΔV	is the phasor difference between the voltage during the fault and the voltage immediately prior to the fault;
ΔI	is the phasor difference between the current during the fault and the current immediately prior to the fault;
V_{fault}	is the phasor voltage during the fault;
$V_{prefault}$	is the phasor voltage immediately prior to the fault;
I_{fault}	is the phasor current during the fault;
$I_{prefault}$	is the phasor current immediately prior to the fault.

Figure 41 shows a representation of superimposed voltages and currents for a two-terminal line when the fault is in the forward direction on the line. It is possible to show that at station S, the incremental imped-

Copyright © 2000 IEEE. All rights reserved.

Copyright The Institute of Electrical and Electronics Engineers, Inc.
Provided by IHS under license with IEEE
No reproduction or networking permitted without license from IHS
Not for Resale

ance, ΔZ, for a forward fault will be equal to the negative of the source impedance, Z_S, behind the relay (Johns, Martin, Barker, Walker, and Crossley [B42]; Sidhu [B46]) such that

$$\Delta Z = \frac{\Delta V_S}{\Delta I_S} = -Z_S \tag{2}$$

where

ΔV_S is the phasor difference between the voltage during the fault and the voltage immediately prior to the fault at Bus S;

ΔI_S is the phasor difference between the current during the fault and the current immediately prior to the fault at Bus S;

Z_S is the source impedance at Bus S.

If the fault is in the reverse direction, the impedance seen by the relay will then be the sum of the line impedance plus the impedance of the remote source.

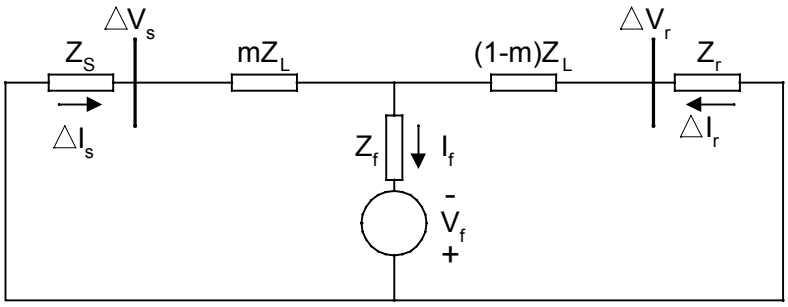

Figure 41—Superimposed system

For application of the above technique in three-phase systems, the phase voltages and phase currents are decoupled by transforming them into sequence components. The incremental sequence voltages and currents are then used for determining the incremental impedance and, hence, the direction of the fault. It is also possible to use incremental phase voltages and currents along with the replica impedance. This method gives a sense of direction, but does not provide the value of source impedance, etc., as in the single-phase network discussed previously.

The use of superimposed components allows a relay to determine the direction of a fault very quickly, typically in less than 0.25 cycle. In order to achieve this high speed, analysis is usually performed in the time domain. If the fault is external to the protected line section, the relay can provide blocking logic. If the fault is forward, the relay can provide phase-selective, high-speed tripping, provided no block is received from the remote terminal.

For close-in faults, the relay may determine whether the fault is internal or external by direction, level, and setting. This capability provides ultra-high-speed tripping independent of the communication channel. For other fault locations, the relay provides the logic for conventional directional comparison pilot protection.

The directional incremental impedance relay is usually packaged together with phase and ground distance back-up relays. Additional phase selection logic makes the relay ideal for single-phase tripping applications. These relays can be applied to long and short lines.

Copyright © 2000 IEEE. All rights reserved.
Copyright The Institute of Electrical and Electronics Engineers, Inc.
Provided by IHS under license with IEEE
No reproduction or networking permitted without license from IHS
Not for Resale

This relay is particularly suitable for use on series compensated lines, because the directional incremental impedance detector is unaffected by voltage reversals and current reversals. In addition, the time-delayed Zone 1 distance function permits the gaps across the series capacitors to flash before it makes the directional measurement.

5.2.5.2 Directional traveling wave relay

Although this principle has never reached the level of market versions, there have been a number of theoretical studies on the possibility of using the traveling waves originating from a fault to determine the direction of a fault (Dommel and Michaels [B63]).

A directional traveling wave relay takes advantage of the propagation along the line of the voltage and current change occurring at the location of the fault. This principle is illustrated in Figure 42 (Chamia and Lieberman [B39]).

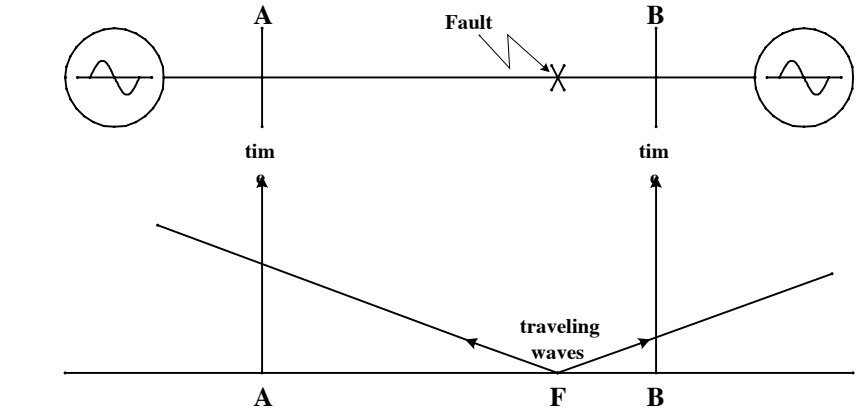

(a) Internal fault

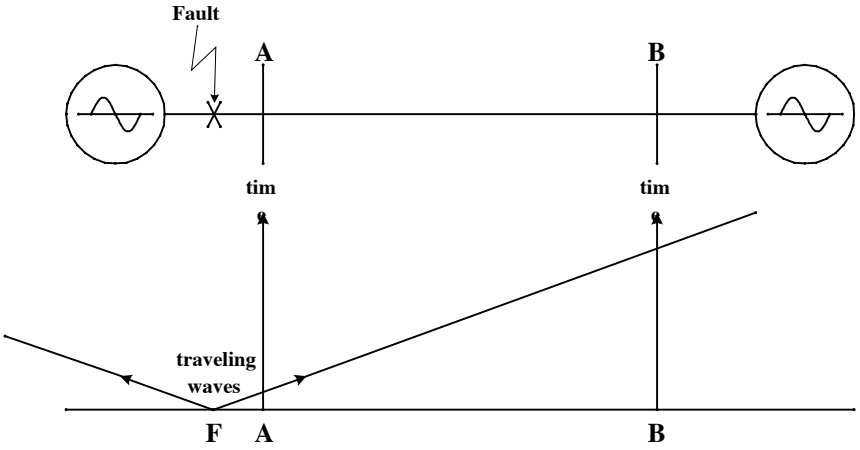

(b) External fault

Figure 42—Traveling waves

Copyright © 2000 IEEE. All rights reserved.

Copyright The Institute of Electrical and Electronics Engineers, Inc.
Provided by IHS under license with IEEE
No reproduction or networking permitted without license from IHS
Not for Resale

At the relay location, a discriminant asserts the direction of the fault. For example in Equation (3), a forward fault discriminant, ΔF, for a single-phase line is defined as (Mansour and Swift [B44]):

$$\Delta F = (\Delta \bar{V}_R - Z\Delta \bar{I}_R)^2 + \frac{1}{\omega^2}\left(\frac{d(\Delta \bar{V}_R - Z\Delta \bar{I}_R)}{dt}\right)^2 \quad (3)$$

where

- ΔV is the phasor difference between the voltage during the fault and the voltage immediately prior to the fault at the relay location;
- ΔI is the phasor difference between the current during the fault and the current immediately prior to the fault at the relay location;
- ω is the network frequency;
- Z is the line surge impedance.

A forward fault is asserted when the discriminant exceeds a threshold. It should be noted that these changes are practically the same as the superimposed quantities of the previous clause. The impedance (Z) is, however, the line surge impedance. Because of these similarities, there has been at the outset some confusion between the traveling wave principle and the incremental impedance principle relays.

It should be noted also that the only industrialized specific application of traveling waves has been for fault location. In this case, two precisely synchronized clocks, each at the extremities of the line, measure the time of incidence of the traveling wave pulse. Using this information, the distance to the fault can be computed.

5.3 Special schemes

5.3.1 Out-of-step (OS) protection

5.3.1.1 OS general

Line protection can be affected by heavy load flows or by stable and unstable swings (out-of-step). Conventional line protection is set so that it does not operate undesirably due to load. Distance relaying sensitive to three-phase load and directional phase overcurrent relaying may operate for transient swings if the trip time is not long enough to ride through the transient. For stable swings, it is desirable that line protection on nonfaulted lines not trip for the swing condition. Some relaying schemes will sense unstable conditions and can be applied to determine where tripping will and will not occur. Ideally, this will result in splitting the system such that the load in each part is matched to the generation, thereby maintaining a maximum of the system load during the disturbance. OS relaying may also be designed so that the breakers do not attempt to interrupt with a very large phase angle across the contacts.

There are two primary methods for detecting swing conditions. One is based on the impedance locus seen by distance relays applied to a line section. The other is based on the angular measurement of the sending and receiving end voltages. A brief treatment of this subject is given below. A more comprehensive treatment can be found in Blackburn [B20] and Cook [B10].

The following fundamental objectives should guide the choice of an OS philosophy:

a) Do not trip on recoverable/stable swings.
b) Separate the system segments that are out of step with one another.
c) Separate where a satisfactory generation–load match will exist in each separated area.

Copyright © 2000 IEEE. All rights reserved.
Copyright The Institute of Electrical and Electronics Engineers, Inc.
Provided by IHS under license with IEEE
No reproduction or networking permitted without license from IHS
Not for Resale

d) Trip on OS, block reclosing at one terminal, and block tripping at the other when line separation is required.

e) Choose the OS trip locations where system restoration is easiest.

f) Trip on OS only under controlled recovery voltage conditions or with low current.

5.3.1.2 OS relaying schemes

5.3.1.2.1 Concentric mho circle

Power swings can be detected by the use of two concentric mho circles, as shown in Figure 43. The locus of the apparent impedance of a swing condition can be plotted on an R-X diagram and can pass through the two characteristics if the swing occurs on the protected line, shown as segment AB in Figure 43. The impedance locus of a swing may operate 68 and 21P sequentially. A line fault inside 21P will result in simultaneous operation of 21P and 68. The time between operation of 21P and 68 will determine whether or not the swing is considered unstable. The distance between the two mho circles and timers can make this determination. Available relay scheme logic has fixed timers and fixed relationships between the relay settings based on the experience of known swing conditions, and will prove satisfactory for most applications. A severe application may require stability studies to determine the required settings and relay schemes with adjustable settings.

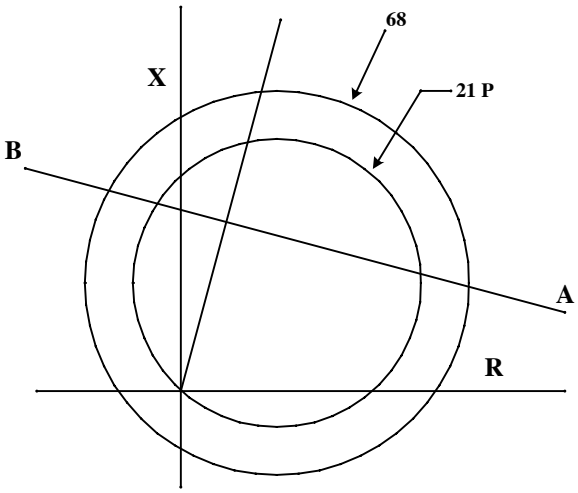

Figure 43—Concentric mho circles

This scheme is satisfactory for OS blocking or blocking reclosing on an OS condition. It may not operate satisfactorily for an OS tripping scheme without additional logic (Elmore [B31]). Faults near the 21P balance point can cause slow operation of 21P and, thus, sequential operation of 21P and 68, resulting in the false indication of a swing. Also, sequential operation of 21P and 68 for an increasing angle across the breaker can result in the breaker attempting to open under too great a recovery voltage, thereby resulting in failure. The 68 unit must not operate continuously picked up due to load, which may limit the application of the concentric circle scheme.

Copyright © 2000 IEEE. All rights reserved.

Copyright The Institute of Electrical and Electronics Engineers, Inc.
Provided by IHS under license with IEEE
No reproduction or networking permitted without license from IHS
Not for Resale

5.3.1.2.2 Blinder schemes

The blinder characteristic shown in Figure 44 can be used to restrict the reach of a distance relay on a long line or during heavy load conditions. The distance relay will be allowed to trip only when both blinders are operated (i.e., the apparent impedance must be between the two characteristics).

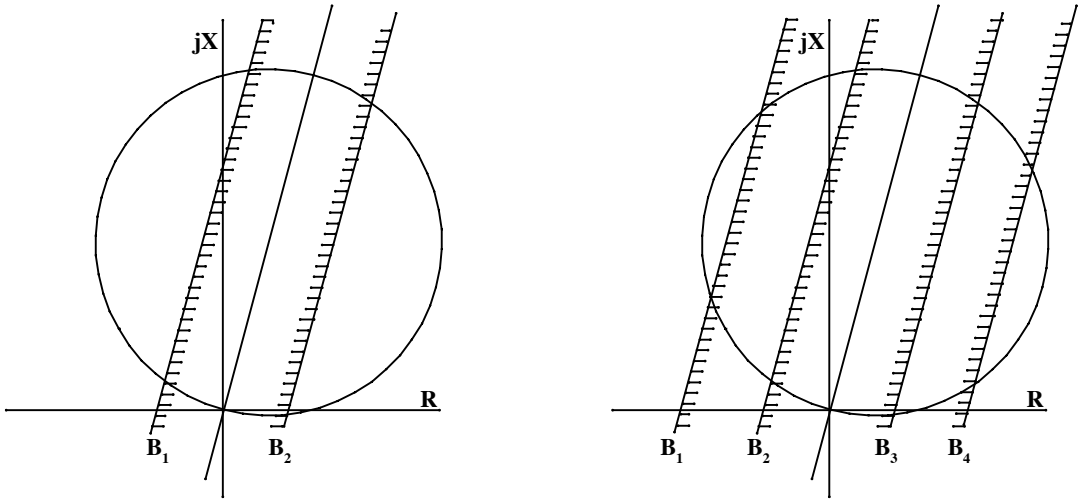

(a) Single blinder **(b) Double blinder**

Figure 44—Blinders

The blinder may also be used to initiate tripping for an unstable swing. Logic is used to trip when the swing locus exits either the left or right blinder after sequentially passing through both blinders. This implies that the swing has passed through 180°. An inherent advantage of this scheme is that the tripping will be initiated for a closing angle and, therefore, a decreasing recovery angle across the circuit breaker. The single blinder scheme may also be used to block reclosing for an OS condition. Normally, the reclose blocking would be used only at one end of the line to facilitate restoration. This scheme is usually supervised by a distance or overcurrent unit to prevent operation for very light shifting load that could cause rapid sequential operation of the blinders. The single blinder scheme may be used to trip for OS, even though the swing locus does not pass through the protected line. The single blinder scheme should not be used on a line where current reversals can occur, causing sequential operation of the blinders (Elmore [B31]).

The single blinder scheme shown in Figure 44a should not be used to block tripping of a distance relay for an OS condition. Since the swing locus must pass through both blinders to distinguish between a fault and a swing, the distance relay would already have operated and tripped the line.

The double blinder scheme shown in Figure 44b will eliminate most of the restrictions of the single blinder. It can be used for OS tripping or blocking, reclose blocking, and restrict tripping on load.

5.3.1.2.3 Sending end versus receiving end voltage monitors

OS conditions can be sensed by comparing the sending end and receiving end voltage angles across a line section. These swing detectors are of the following two types:

a) **Communication independent.** The secondary voltages and currents at the sending end of the tie line are fed into the relay. The current is passed through a “replica” impedance of the tie line, thus

Copyright © 2000 IEEE. All rights reserved.
Copyright The Institute of Electrical and Electronics Engineers, Inc.
Provided by IHS under license with IEEE
No reproduction or networking permitted without license from IHS
Not for Resale

providing an estimate of the voltage at the receiving end. If the angular displacement between these two voltages is greater than the relay setting, or the rate of change of the angle is above its setting, the relay responds to the OS condition.

b) **Communication dependent.** The protection unit at one end of the tie line transmits phase information to the unit at the other end. The receiving end determines the angular displacement between the voltages at both ends of the interconnection. If the angular displacement between these two voltages is greater than the relay setting, or the rate of change of the angle is above the setting, the relay responds to the OS condition.

5.3.1.3 Response of various line protection schemes to OS conditions

During stable and unstable swings, phase distance relays are subject to operate. Therefore, any schemes based upon their use are subject to operation unless supervised by OS blocking. Examples of these schemes include step-distance protection, directional comparison blocking, POTT, etc. The two major factors that influence the likelihood of operation are the relay's reach setting and the speed of operation of the relay. Distance relays set with very long reach settings are more likely to detect swings as faults. Relays that employ time delay, such as a Zone 3 relays, are less likely to operate for swing conditions, because the swing may cause the locus of the apparent impedance to pass in and out of the relay's characteristic prior to relay operation. Schemes based solely on current, such as phase comparison or current differential, will not operate for swings.

5.3.2 Transient blocking logic for parallel lines

Pilot schemes may have to accommodate sequential tripping of the breakers associated with a parallel circuit for faults on one of the parallel circuits. Depending on the distance relays, system impedances, and fault location, a fault on a parallel line may be seen by the relays at both ends of the unfaulted line. Consider the system of Figure 45. On the unfaulted lines, the fault will initially appear to be behind the relays at A, but forward to the relays at B. If Breaker 3 on the parallel line trips first, the current will change direction, causing the relays at A to then detect a forward fault and trip undesirably if the permissive signal is still being received. Most relaying systems have a logic function known as "transient blocking" to introduce time delay to stabilize the relaying system during this fault current reversal. In the directional comparison blocking scheme, this is accomplished by signal continuation. Identification of a fault as reverse introduces a time-delayed reset of the blocking carrier. In the case of the POTT or unblocking systems, the pilot signal is used to permit a trip. A time delay is used to allow the trip functions at B and the transmitted permissive signal to reset through the "transient blocking" circuitry. DUTT and PUTT systems do not require transient blocking because of the limited reach of the distance units that control the channel.

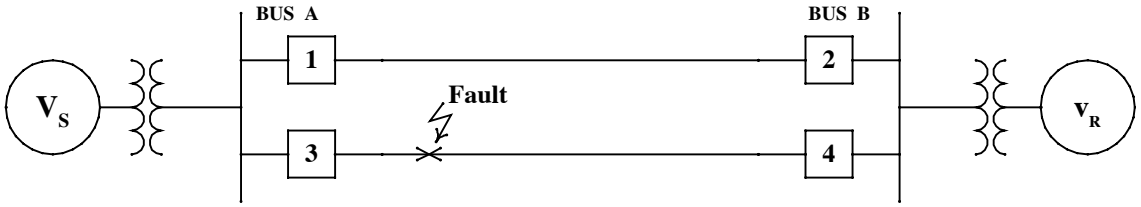

Figure 45—System with parallel lines

5.3.3 Switch onto fault

Switch onto fault, also called close into fault, is a detection system for taking action when a breaker is closed onto a fault. The primary reason for using this scheme is to supplement distance relaying protection for close-in, three-phase faults that may go undetected due to the location of VTs and the absence of memory

Copyright © 2000 IEEE. All rights reserved.

Copyright The Institute of Electrical and Electronics Engineers, Inc.
Provided by IHS under license with IEEE
No reproduction or networking permitted without license from IHS
Not for Resale

action following line re-energization. This scheme also allows instantaneous tripping following reclosing into a permanent fault. Switch onto fault protection is especially necessary when line side potentials are used for distance relays. The basic scheme first determines the breaker has been opened. Following a close, the scheme provides a window in which high-speed tripping can occur if a fault is detected. This scheme usually employs a nondirectional overcurrent element to detect if a fault is present. Some schemes also use a voltage level detector for security and added selectivity to prevent operation on load pickup

5.3.4 Fault detector supervision

Fault detector supervision is used to enhance the security of a protective scheme. When used in this function, the fault detector is placed in series with other protective devices trip circuits, only allowing the device to operate if a fault is present on the system. It was originally used in electromechanical relaying schemes to prevent relay operation on loss of voltage, inadvertent tripping during relay testing, and incorrect operation during line-energization, or to enhance a relay systems seismic performance. Since fault detector supervision does increase the security of any system, it is still in common use in static and microprocessor-based systems. The optimum setting is above maximum expected load current and below minimum expected fault current.

5.3.5 Weak infeed and echo logic

The logic shown in Figure 46 illustrates one method for initiating tripping at the weak infeed terminal of the transmission line when such conditions exist. The logic shown outside the dashed box represents the conventional logic used in POTT and directional comparison unblocking schemes. The logic shown inside the dashed box represents the supplemental weak infeed tripping and echo keying logic. Weak infeed tripping logic requires echo keying logic to echo a permissive TRIP or unblocking signal back to the strong source terminal.

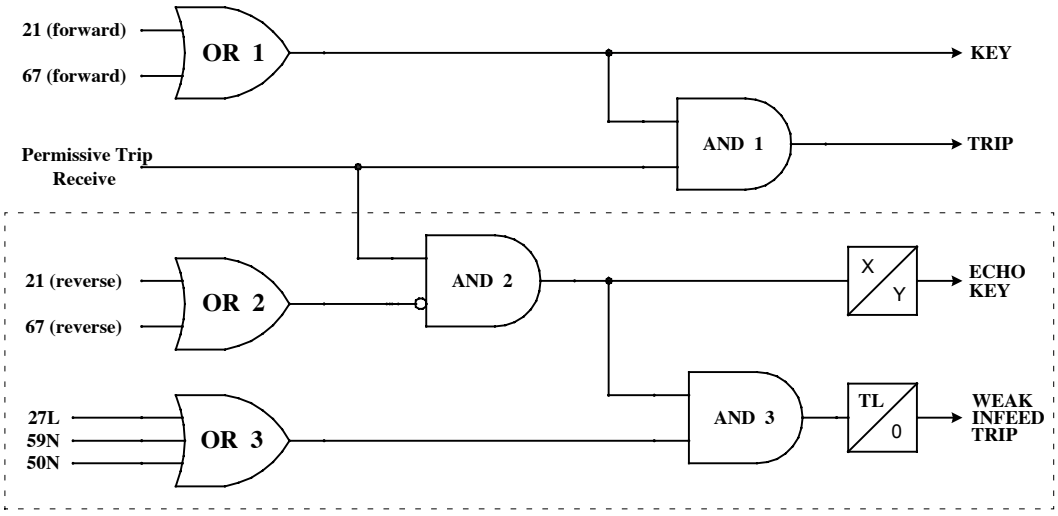

Figure 46—Weak infeed and echo key logic

Echo keying logic can be used independent of weak infeed tripping logic. For example, echo keying logic may be used at either line terminal as an alternative to 52b open breaker keying; or it may be used at a weak infeed source terminal simply to speed tripping at the strong source terminal, where sequential tripping will occur at the weak terminal after the strong source is removed. The weak infeed terminal source, as the term implies, is too weak to supply sufficient fault current to operate conventional distance or directional

Copyright © 2000 IEEE. All rights reserved.
Copyright The Institute of Electrical and Electronics Engineers, Inc.
Provided by IHS under license with IEEE
No reproduction or networking permitted without license from IHS
Not for Resale

overcurrent relay elements for faults on the protected line section. The remote line terminal is assumed to have a sufficiently strong source to permit conventional relay operation. Successful sequential tripping requires that the weak infeed terminal source becomes sufficiently strong to permit conventional relay operation after the strong source terminal is open. If the weak source remains too weak to permit conventional relay operation, then direct transfer tripping is required from the strong source terminal, or weak infeed logic must be applied at the weak source terminal.

Weak infeed logic requires additional relay elements at the weak source terminal to supplement the conventional forward reaching distance and directional overcurrent relay elements. A phase undervoltage relay element (27L), a residual overvoltage relay element (59N), or a sensitive residual overcurrent relay element (50N) are required to detect a fault condition. But because these elements may operate for internal and external faults, reverse reaching distance (21) or directional overcurrent (67) relay elements are needed to block keying and tripping for faults in the reverse direction.

The logic at the weak infeed terminal works as follows. None of the forward reaching relay elements operate, but a permissive trip is received from the remote terminal for an internal fault or a fault behind the weak infeed relay terminal. If the reverse reaching relay elements do not operate, AND2 produces an output to echo key the transmitter, permitting the strong infeed terminal to trip with minimal time delay. A pickup/dropout timer on the echo key output ensures the echoed signal duration is shorter than the echo delay to prevent keying signal lockup. AND2 further provides one of the inputs to AND3, which has a second input provided by a drop in phase voltage (27L pickup), a rise in residual voltage (59N pickup), or the presence of a small amount of zero-sequence current (50N pickup). If the output of AND3 persists for the pickup time of the security timer (TL) tripping is initiated at the weak infeed terminal of the line.

If the fault is behind the weak infeed terminal, the reverse reaching relay elements operate to block echo keying and weak infeed tripping. The reverse reaching relay elements are required for the echo keying logic, even if weak infeed logic is not used.

In summary, the weak infeed logic TRIP output asserts when the following three conditions occur simultaneously:

a) A TRIP signal is received from the strong remote terminal, indicating that a fault has been detected by the forward reaching relay elements located there.

b) There is no output from the reverse reaching relay elements at the weak infeed terminal, indicating that the fault is not behind the weak terminal.

c) There is a drop in phase voltage or a small amount of zero-sequence current detected at the weak terminal, indicating a fault exists.

Some advantages of the weak infeed and echo keying logic scheme are as follows:

— Scheme dependability is improved because it permits tripping, via the echo feature, at any line terminal where the fault is detected, regardless of whether the forward reaching relay elements at the other terminals operate. This feature eliminates the need to continuously key the transmitter when the line breaker is open.

— The scheme is secure in that it will not trip for any faults if the channel is inoperative.

— The scheme provides logic to initiate fast tripping of the weak infeed terminals of the line, thereby avoiding delayed sequential tripping or no tripping.

--`,,`,,,-`-`,,`,,`,`,,`---
Copyright © 2000 IEEE. All rights reserved.

Copyright The Institute of Electrical and Electronics Engineers, Inc.
Provided by IHS under license with IEEE
No reproduction or networking permitted without license from IHS
Not for Resale

5.3.6 Remote breaker operation detection scheme (loss of load)

For faults beyond the reach of the Zone 1 or the instantaneous directional ground overcurrent protection, loss of load or remote breaker operation detection logic can be used to speed up fault clearing. This scheme is typically applied when communications for pilot relaying is not available.

When a fault occurs at the remote end of the protected line, Zone 1 of the remote end protection will clear without intentional time delay. If the fault is other than three-phase or three-phase-to-ground, this will result in a change of the current of the unfaulted phase(s) from load current to charging current. At the same time, the relay will still see the fault current in the faulted phase(s). If this condition exists for a specified time (0.5–1.0 cycle), a decision is made that the remote breaker has opened. The relay then operates in a similar way to a POTT scheme and trips the local breaker without any additional time delay. This scheme can misoperate for faults in other line sections if the unfaulted phase load currents drop below the load current threshold setting.

a) Because of the principle of operation described above, the remote breaker operation detection scheme will not operate for three-phase faults.

b) The remote breaker operation detection scheme should not be considered an equivalent of a pilot scheme, although it offers some of the improvements of pilot schemes.

c) Tapped load on the transmission line may prevent application of this scheme.

d) The combination of load current and unbalanced fault current can cause low current in one phase, which might cause this scheme to operate for a fault in an external circuit.

5.3.7 Backup and breaker failure protection

Backup protection ensures that a fault is cleared in the event of a failure in the primary protection. There are three basic forms of backup protection: remote, local, and breaker failure. A combination of all three of these provides the most complete backup protection.

5.3.7.1 Remote backup

This form of protection relies on the remote relaying on adjacent circuits to overreach the primary zones of protection. Tripping is delayed to allow for the primary protection to operate. The effects of infeed from adjacent lines must be taken into account to ensure complete coverage. In some cases, if the remote backup relays cannot completely cover the protected zone under normal conditions, they must at least be able to operate sequentially. Obviously, this leads to lengthy delays in the clearing of faults. A serious drawback of remote backup protection is the complete loss of supply to the affected substations, because all lines into the station have to be opened to remotely clear the fault.

5.3.7.2 Local backup

The basic form of local backup relaying is the inclusion of redundancy in the protection scheme. This redundancy can range from the use of additional zones of independent relays to full duplication of the protective scheme, including CTs, VTs, battery, and trip circuits. Typically, the higher the voltage level, the greater the redundancy. The use of local backup reduces the long delays and the loss of selectivity that occur with the operation of remote backup relaying. The tradeoff occurs in extra cost for the additional equipment.

5.3.7.3 Breaker failure

Breaker failure relaying operates when the local relays call for a trip, but a breaker fails to interrupt the fault current. A simple breaker failure scheme consists of a fault detector, an indication of breaker status, and a timer that starts when the line relay requests a trip. After a delay (typically between 10 and 20 cycles), the

Copyright © 2000 IEEE. All rights reserved.
Copyright The Institute of Electrical and Electronics Engineers, Inc.
Provided by IHS under license with IEEE
No reproduction or networking permitted without license from IHS
Not for Resale

breaker failure scheme will trip all of the breakers required to clear the fault. If it were in constant operation, the fault detector would best be set above maximum load current and below minimum fault current for the line. If the fault detector is switched on only with the activation of the breaker failure scheme, the pickup may be set below the maximum load current.

5.4 Directional ground overcurrent relay polarization

5.4.1 Zero-sequence voltage polarization

Some directional ground overcurrent relays declare faults forward or reverse by comparing the phasor relationship between the zero-sequence current flowing in the protected line ($3I_0$) and the zero-sequence voltage ($3V_0$) at the relay location. The zero-sequence voltage magnitude at the relay location varies depending on the location of the fault, the zero-sequence source impedance behind the relay location, and the sequence impedances of the transmission line. At stations with large, solidly grounded transformer banks (small zero-sequence source impedance), the zero-sequence voltage must be checked for remote faults to ensure that an adequate magnitude of $3V_0$ is present for proper operation of the directional element. Modern ground directional elements are very sensitive, so this may not present a problem unless a standing zero-sequence voltage is present due to relay voltage source inaccuracies or an inherent imbalance of system voltages caused by nontransposed lines.

If the magnitude of $3V_0$ is too low for some system fault conditions, then zero-sequence current polarization, dual polarization, or negative-sequence polarization should be used.

The zero-sequence directional element compares the angle between $3V_0$ and $3I_0$. An incorrect $3V_0$ measured at a relay can cause misoperation. To ensure correct $3V_0$ at the relay, the VT secondary should be grounded at only one location and a neutral wire should be run between the VT neutral and the relay neutral. Otherwise, the $3V_0$ measured at the relay location may be different from the voltage at the VT secondary. If the VT secondary is grounded at more than one location, stray ground currents in the substation ground mat during a primary ground fault could cause the VT neutral and the relay neutral to be at different voltages. If the relay neutral is not grounded and no neutral conductor runs between the VT and relay neutral, then neutral shift could cause the relay to measure incorrect $3V_0$ voltage. This can be seen in Figure 47. The relay would establish its own neutral and the measured $3V_0$ would be

$$3V_0 = V_{an} + V_{bn} + V_{cn} = 0$$

Rather than

$$3V_0 = V_{ag} + V_{bg} + V_{cg}$$

which is the correct zero-sequence voltage.

Negative-sequence directional elements are not affected by neutral shift.

System fault studies must be performed to verify that adequate $3I_0$ flows for the desired protection zone. Also, relays should be selected with setting ranges that provide adequate sensitivity.

Zero-sequence directional relays base their directional decisions on the phasor relationship between $3V_0$ and $3I_0$ quantities. The zero-sequence voltage is derived from the secondary voltages of VTs or capacitance voltage transformers (CVTs) through a zero-sequence filter, as shown in Figure 27.

Copyright © 2000 IEEE. All rights reserved.

Copyright The Institute of Electrical and Electronics Engineers, Inc.
Provided by IHS under license with IEEE
No reproduction or networking permitted without license from IHS
Not for Resale

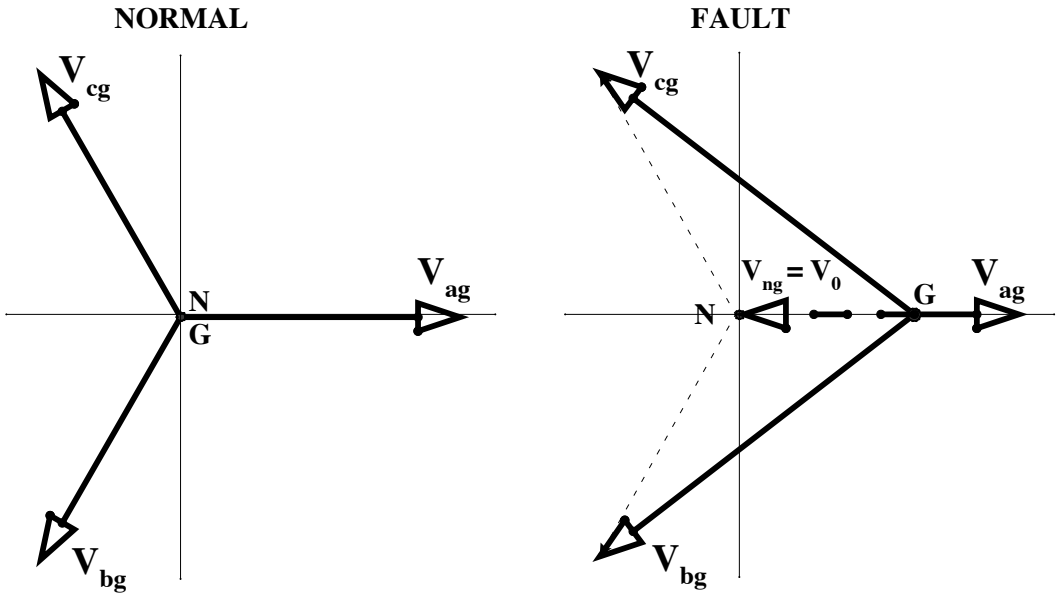

Figure 47—Neutral–actual and ground shift

5.4.2 Zero-sequence current polarization

Zero-sequence current polarization is commonly applied at stations having power transformers from which a suitable ground current can be used as a polarizing current (I_{pol}). In order for this method to be accurate, I_{pol} must flow in the same direction relative to the current flowing to the fault for all system ground faults. This method of polarization compares the phase angle of the zero-sequence current flowing in the polarizing source (transformer neutral) with $3I_0$ flowing in the line. Figure 48 shows an example of polarizing sources for various power transformer configurations. In this figure, only the delta-wye grounded transformer (Figure 48a) provides an adequate ground polarizing current for lines on the wye side of the bank. None of the other transformer configurations in Figure 48 are suitable for current polarization. Figure 49 shows why the neutral of an autotransformer cannot be used as a current polarization source. This is because of the change in direction of the current in the neutral of the autotransformer for the two different faults. CTs within the tertiary windings of autotransformers may be a suitable source of ground polarization current in many situations. Guidelines for the use of tertiary winding CTs are contained in IEEE Std C37.110-1996.

Certain three-winding transformers may be suitable for using I_{pol} (Blackburn [B2]). However, in some cases similar to Figure 49, the relative direction of I_{pol} may change depending on the location of the fault. Studies must be performed to ascertain the suitability of any zero-sequence current polarizing source. If an adequate source of I_{pol} is not available, one of the voltage polarization methods should be used.

Copyright © 2000 IEEE. All rights reserved.
Copyright The Institute of Electrical and Electronics Engineers, Inc.
Provided by IHS under license with IEEE
No reproduction or networking permitted without license from IHS
Not for Resale

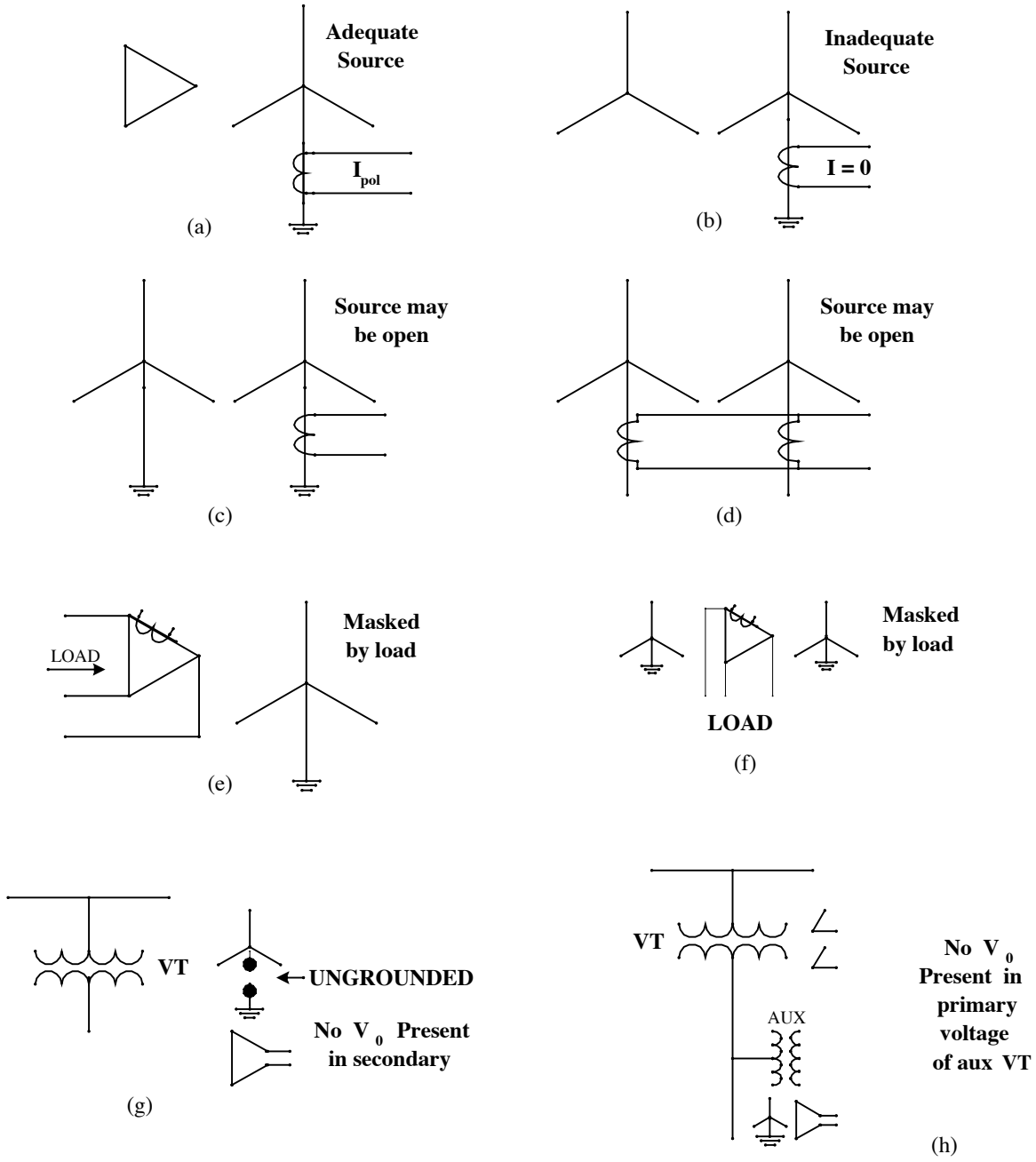

Figure 48—Suitable and unsuitable polarizing sources

Copyright © 2000 IEEE. All rights reserved.

Copyright The Institute of Electrical and Electronics Engineers, Inc.
Provided by IHS under license with IEEE
No reproduction or networking permitted without license from IHS
Not for Resale

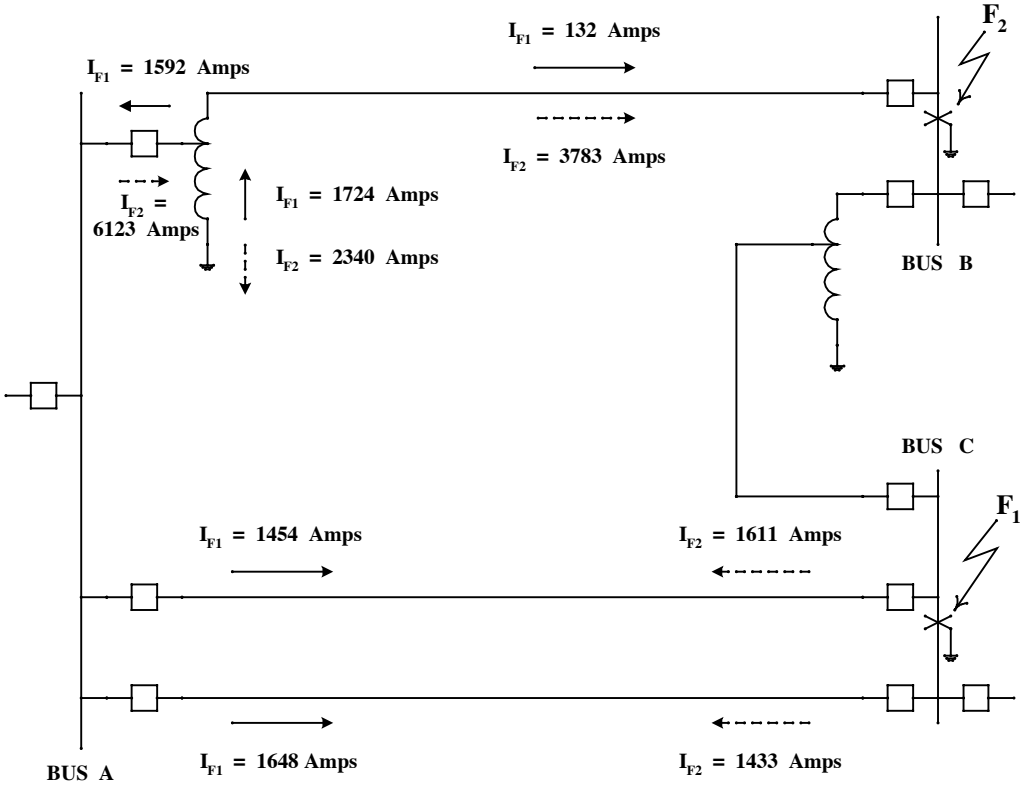

Figure 49—Changes in polarizing source for ground fault

5.4.3 Negative-sequence polarization

Negative-sequence directional relays base their directional decisions on the phasor relationship between V_2 and line I_2 quantities. The negative-sequence voltage is derived from the secondary voltages of VTs or CVTs through a negative-sequence filter. Untransposed transmission systems or improperly adjusted relay voltage sources present an inherent standing zero or negative-sequence voltage that could be of sufficient magnitude to incorrectly polarize directional relays. Users should routinely check the standing negative (and zero) sequence voltage of VTs and CVTs during maintenance periods and take corrective actions if such standing voltages are sufficient to cause relaying problems. Negative-sequence polarized directional elements have the following three major advantages over zero-sequence polarized directional elements:

a) Negative-sequence polarized relays are insensitive to zero-sequence mutual coupling associated with parallel transmission line applications. This coupling can occasionally cause a zero-sequence polarized directional element to lose directional security in cases where the mutually coupled lines have a different zero-sequence source at one or both ends of the line, as illustrated in Figure 52 through Figure 54.

b) There is often more negative-sequence current than zero-sequence current for remote ground faults with high fault resistance. This allows higher sensitivity with reasonable and secure sensitivity thresholds.

c) Negative-sequence current is accurately obtained from line-to-line quantities and is not affected by zero-sequence voltage.

Copyright © 2000 IEEE. All rights reserved.
Copyright The Institute of Electrical and Electronics Engineers, Inc.
Provided by IHS under license with IEEE
No reproduction or networking permitted without license from IHS
Not for Resale

Negative-sequence directional elements declare a fault forward or reverse based on the phasor relationship of V_2 and I_2, adjusted by the protected line impedance angle. This method works quite well in most applications. However, when the negative-sequence source behind the relay terminal is strong (low negative-sequence source impedance), the amount of negative-sequence voltage measured at the relay terminals can be very low. This reduction of V_2 is most pronounced for remote faults. To overcome low V_2 magnitudes, certain negative-sequence directional relays utilize a compensated negative-sequence voltage.

Negative-sequence ground directional relays should be applied with care if the relay is to "look toward" a large source of zero-sequence current that is not a reliable source of negative-sequence current. Small errors in the I_2 filter output may cause the directional element to operate for faults behind the relay.

5.4.4 Mutually coupled transmission line considerations

Mutual coupling between transmission lines is common in modern power systems and has a significant effect on behavior of the relay protection during faults involving ground. The positive and negative-sequence mutual impedances are negligible; however, the zero-sequence mutual coupling may be significant and should be considered when setting ground relays.

To evaluate the effects of the mutual coupling, the maximum external fault condition is usually a close-in external fault with the second circuit open and grounded at both ends (Figure 50). It should be verified that the relays do not overreach for this condition. A close-in fault on the line side of an open breaker on the parallel circuit should also be considered (Figure 51).

When the mutually coupled lines have only one bus, or do not have a common bus, a fault at the close end of the mutually coupled section must be considered. (See Figure 52 and Figure 53.) This also applies to mutually coupled lines on different voltages (Figure 54).

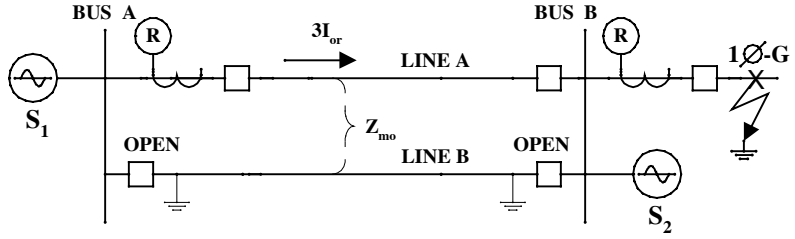

Figure 50—Circuit open and grounded

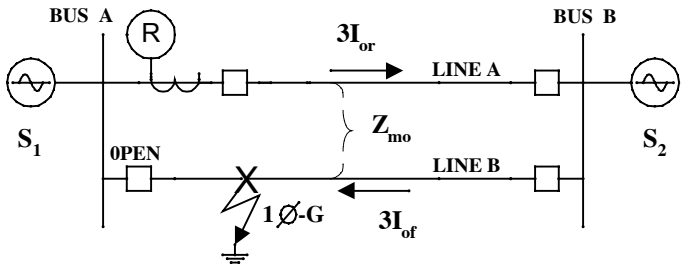

Figure 51—Close-in fault near end

Copyright © 2000 IEEE. All rights reserved.

Copyright The Institute of Electrical and Electronics Engineers, Inc.
Provided by IHS under license with IEEE
No reproduction or networking permitted without license from IHS
Not for Resale

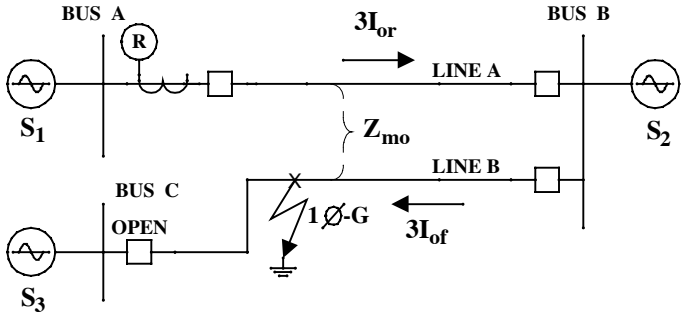

Figure 52—Mutually coupled lines with one common bus

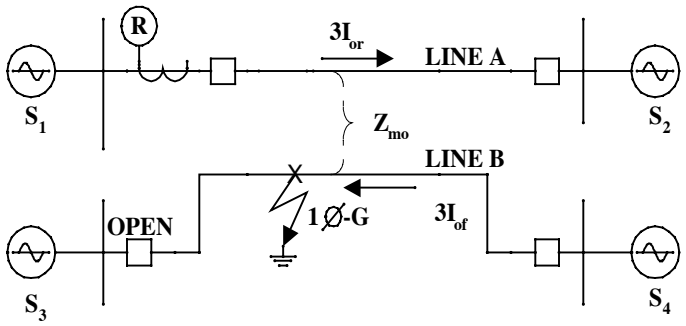

Figure 53—Mutually coupled lines without a common bus

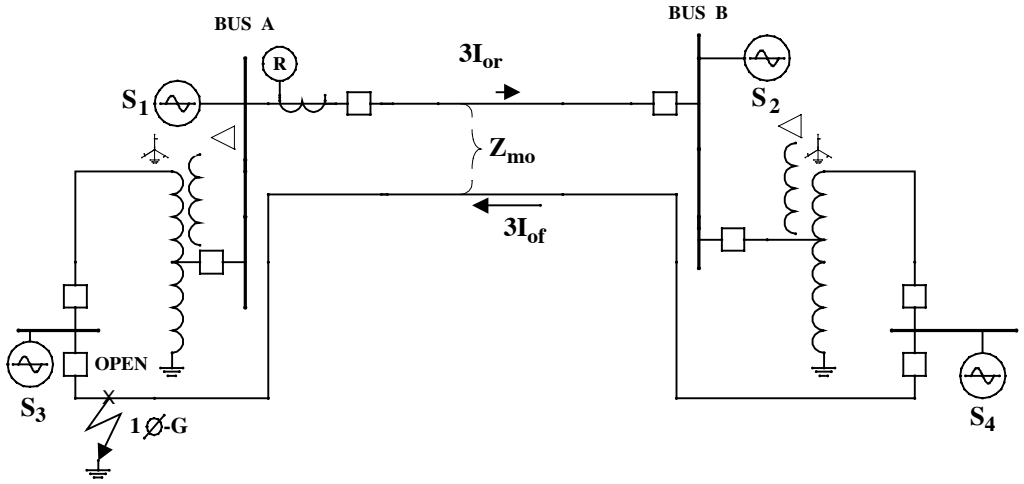

Figure 54—Mutually coupled lines with different voltages and different ground sources

Copyright © 2000 IEEE. All rights reserved.
Copyright The Institute of Electrical and Electronics Engineers, Inc.
Provided by IHS under license with IEEE
No reproduction or networking permitted without license from IHS
Not for Resale

In the case of mutually coupled lines with different voltages, the effect of ground faults on the higher voltage line can be the determining factor for the setting of the instantaneous ground relay on the healthy lower voltage line. The ground relay instantaneous setting calculation must be based on the maximum external fault current which, for mutually coupled lines, can be different from the remote-bus-fault current. For lines that are mutually coupled for a portion of their length, faults at the end of the mutually coupled section are often more important than the line end faults.

Sequentially cleared faults can also cause problems in mutually coupled lines. In such cases, the induced zero-sequence current in an unfaulted, mutually coupled line can suddenly change direction. This sudden reversal can cause problems on schemes that use zero-sequence polarized directional ground relays without current reversal logic.

Zero-sequence voltage reversal can also cause problems. The effect is caused by zero-sequence current in an unfaulted line that is mutually coupled to a faulted line when the zero-sequence sources at the ends of the faulted and unfaulted lines are not strongly tied together. The induced current in the unfaulted line can cause zero-sequence voltages at each end to have opposite polarity from each other, and can cause zero-sequence (current or voltage) polarized directional ground overcurrent relays at both ends of the line to declare a forward fault. This can cause undesirable tripping of the unfaulted line, especially in the directional comparison schemes (Blackburn [B2]). Phase comparison and current differential schemes are not susceptible to the problems of zero-sequence mutual effect, because any influence from this source manifests itself in the form of a “through” current.

To avoid relay misoperation caused by the mutual coupling effect

a) If zero-sequence polarization is used for directional ground overcurrent relaying, consider using current reversal logic (“transient blocking”) in directional comparison schemes.
b) Consider using negative-sequence polarized directional ground overcurrent relays, current differential relaying, or phase comparison pilot schemes.
c) Use directionally controlled instantaneous ground overcurrent elements.
d) Consider the application of relays with selectable setting groups for normal and contingency conditions.

5.5 Problems associated with multiterminal lines

The challenge in the application of protection for multiterminal lines (IEEE PSRC Report [B30]) is to

a) Trip all terminals simultaneously for any internal fault at any location on the line with any expected distribution of current.
b) Do not trip any terminals for any external fault at any location on the system with any expected distribution of current.

This challenge is complicated by the infinite number of line configurations with varying numbers of terminals, line lengths, and source and load conditions. In general, the same protective relays and relaying schemes that are used for two-terminal lines may be adapted, by settings or by hardware or software additions, for use on multiterminal lines.

5.5.1 Current outfeed

Multiterminal lines create the possibility of a current outfeed condition. Current outfeed occurs when, due to system source, load, and impedance conditions, current flows out one or more of the terminals of a line during an internal fault. For some types of relays and pilot systems, this outfeed condition may cause delayed or sequential operation. For other types of relays and pilots systems, no operation could be the result.

Copyright © 2000 IEEE. All rights reserved.

Copyright The Institute of Electrical and Electronics Engineers, Inc.
Provided by IHS under license with IEEE
No reproduction or networking permitted without license from IHS
Not for Resale

Figure 55 shows an example of an outfeed condition. Distance and directional relays may also be affected by the outfeed current at terminal B. Due to the outfeed current at terminal B, the apparent impedance seen by the relay at terminal A is 1.5 Ω, which is less than the actual impedance to the fault of 2.0 Ω. A reverse-looking, or blocking, distance or directional relay at B will "see" the internal fault as an external fault, and may prevent the line protection from operating for the internal fault.

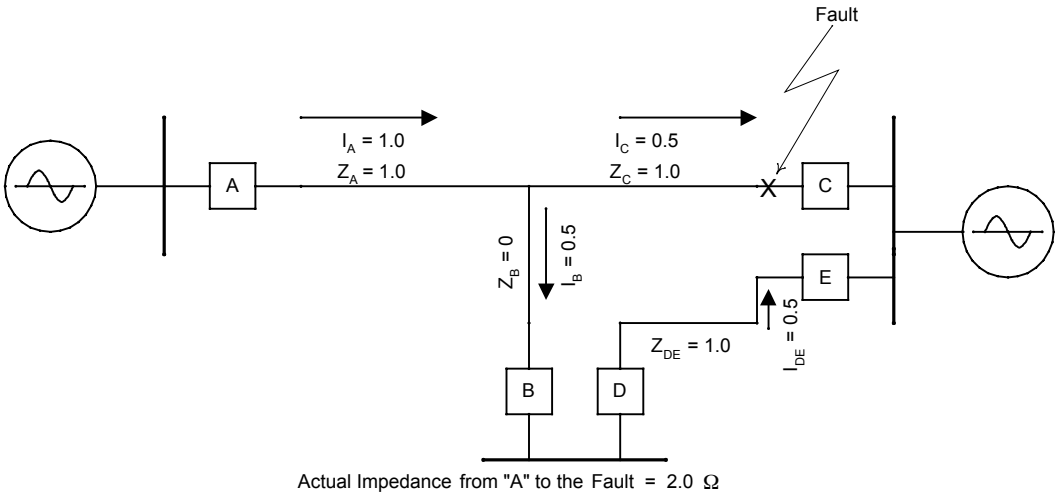

$$\text{APPARENT IMPEDANCE} = \frac{E_A}{I_A} = \frac{(I_A \times Z_A) + (I_C \times Z_C)}{I_A} = 1.5\ \Omega$$

Figure 55—Current outfeed

5.5.2 Current infeed

Distance type relays calculate impedance to a fault based on the voltage and current as seen at the relay location. On a three-terminal line, the impedance "seen" by each relay will depend, in part, on the current contributions from the other terminals. The actual line impedance from a relay terminal to the point of fault is not always the impedance "seen" by a distance relay. Consider the system shown in Figure 56. Due to the infeed current at terminal B, the distance relay at terminal A will see an apparent impedance of 3.0 Ω, which is greater than the actual impedance to the fault. Current infeed has the effect of causing a distance relay to underreach for all faults past the point where the infeed of current occurs.

Copyright © 2000 IEEE. All rights reserved.
Copyright The Institute of Electrical and Electronics Engineers, Inc.
Provided by IHS under license with IEEE
No reproduction or networking permitted without license from IHS
Not for Resale

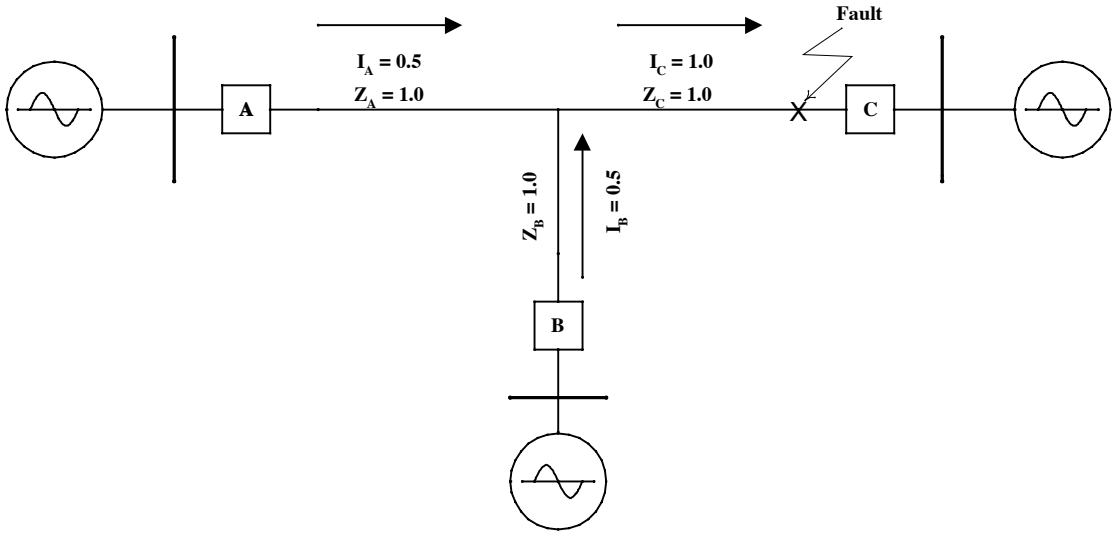

$$\text{APPARENT IMPEDANCE} = \frac{E_A}{I_A} = \frac{(I_A \times Z_A) + (I_C \times Z_C)}{I_A} = 3.0\ \Omega$$

Figure 56—Current infeed

5.5.3 Relay applications on multiterminal lines

5.5.3.1 Distance relay setting considerations

Multiterminal lines cause complications in the setting of both underreaching and overreaching distance elements. Zone 1, or underreaching elements, should be set so as not to reach beyond the nearest terminal without consideration for the effects of infeed. For multiterminal lines that have two of the terminals close together, this limitation may cause the application of some of the Zone 1 elements to be ineffective.

Zone 2 elements are normally set to cover those portions of the protected line not covered by Zone 1. For multiterminal lines, this setting requires that the effects of infeed be considered. Since infeed effects can be quite significant, the resulting settings required to cover the entire protected line with some margin may be large. However, if the infeed effect is lost, this large setting may cause the Zone 2 to reach beyond the Zone 1 relay in the next line section. If this happens, it may be necessary to coordinate the Zone 2 timers to maintain coordination. It is also important to ensure the large setting does not restrict the ability of the line to handle expected load.

Overreaching elements that are part of a pilot scheme normally must also be set to detect faults on all portions of the protected line, with consideration for the effects of infeed. However, coordination with elements protecting adjacent lines is not normally a problem, nor is the consideration of load transfer capability required. A typical setting for the RO functions would be at least 125% of the largest apparent impedance to the remote terminals. This additional margin is important to ensure the consistent, high-speed operation that is important for pilot schemes.

The setting of Zone 3 elements on multiterminal lines is quite complex. The setting depends on the protection requirements assigned to the Zone 3 relay and the configuration of the stations at the remote terminals

--`,,`,,,-`-`,,`,,`,`,,`---
Copyright © 2000 IEEE. All rights reserved.

Copyright The Institute of Electrical and Electronics Engineers, Inc.
Provided by IHS under license with IEEE
No reproduction or networking permitted without license from IHS
Not for Resale

of the multiterminal line. The setting may require the consideration of the infeed within the protected line, as well as any infeeds that can flow into the remote terminal from other sources. Generally, the effectiveness of Zone 3 as remote backup protection will be limited for most multiterminal lines, requiring that local backup or other forms of redundancy be applied.

If infeed requires settings of overreaching relays to be so large as to restrict load transfer or to lose coordination with elements on adjacent lines, it may be necessary to reduce the settings and allow for sequential operation. Sequential operation requires that all faults are detected by at least one of the terminals. The terminal that detects the fault is allowed to trip, which removes its infeed contribution and allows the other terminals to detect the fault and trip. This sequential operation adds significant time delays and may be unacceptable for many applications.

Figure 56 illustrates the infeed effect that occurs on multiterminal lines.

5.5.3.2 Direct underreaching

In this scheme, the Zone 1 functions key a direct transfer trip to the remote terminals, as well as tripping the local breaker. For this scheme to be applied, all internal faults must be seen by the Zone 1 functions from at least one terminal. As on a two-terminal line, if the breaker at one terminal is open, the scheme will not trip properly for faults near the open terminal unless provisions are made to handle this condition. It is necessary for the Zone 1 elements to overlap in order for all faults to be cleared properly.

5.5.3.3 Permissive underreaching

In this scheme, the Zone 1 functions key a permissive trip to the remote terminals, and also trip the local breaker. If the Zone 1 does not operate at a terminal, a trip will be issued if a permissive signal is received and an RO function has operated. In order for this scheme to clear the fault, the fault must be seen by the Zone 1 functions from at least one terminal, and the overreaching zones at each of the other terminals must see the fault.

5.5.3.4 Permissive overreaching

In this scheme, the permissive channel is keyed by the operation of the RO functions. Tripping is initiated only if the local relay detects a fault and a permissive TRIP signal is received from each remote terminal. Thus, the reach of the permissive tripping functions must be set to see all internal faults for all infeed conditions. This is a very secure scheme, because all terminals must see the fault before tripping can be initiated. In some systems, however, due to weak infeed at one or more terminals, or because the reach is limited by the maximum load flow, it may not be possible to set the RO functions at one or more terminals to see all faults on the line. In this case, another relay scheme must be used.

5.5.3.5 Directional comparison blocking

Typically, this scheme will employ an AM ON-OFF type of channel that is keyed for external faults. Therefore, this scheme requires the addition of blocking functions at all terminals. Tripping is initiated if a local RO distance function has operated, and a blocking channel is not being received. If a blocking function operates at any terminal, tripping will be prevented at all terminals. In order for this scheme to initiate high-speed tripping at all terminals, the RO distance functions must be set to see all internal faults for all infeed conditions. However, sequential fault clearing may be initiated if at least one RO distance function sees the fault and no blocking units operate, and if the remaining terminals can see the fault after the remote breaker opens. Current outfeed conditions may cause blocking of all terminals during internal faults if the current outfeed exceeds the pickup of the carrier start element. For external faults, outfeed will result in a current division at the tap point, such that the blocking terminal will see less current than the tripping terminal, possibly resulting in miscoordination.

Copyright © 2000 IEEE. All rights reserved.
Copyright The Institute of Electrical and Electronics Engineers, Inc.
Provided by IHS under license with IEEE
No reproduction or networking permitted without license from IHS
Not for Resale

5.5.3.6 POR with echo and weak-infeed tripping

The POR with echo and weak-infeed tripping scheme is a combination of the best features of the POR and directional comparison blocking schemes. This combination may solve some of the problems associated with pilot relaying of multiterminal lines. As in a POR scheme, tripping is initiated when a local RO function has operated and a permissive signal is received from all of the remote terminals. The same concerns regarding current distribution at the tap point mentioned in 5.5.3.5 apply to POR with echo and weak feed logic.

If infeed effects or other considerations prevent setting the overreaching elements to reach past all terminals for all conditions, the POR with echo and weak-infeed tripping scheme will provide high-speed tripping at all terminals, even if the RO functions operate at only one terminal. This is accomplished via the channel repeat and weak infeed tripping logic. The channel repeat logic typically keys a permissive signal to the remote terminals if a permissive signal is received and no local blocking functions have operated. The weak infeed tripping logic will initiate tripping if a permissive signal is received from both remote terminals and no local blocking functions have operated. This scheme is a balance of the security of the POR scheme and the dependability of the directional comparison blocking scheme.

5.5.3.7 Phase comparison relaying

As on two-terminal lines, phase comparison relays may use individual phase currents, or a composite signal that is derived from the sequence components of the phase currents, as the operating quantity. The phase angles of the individual currents or of the composite signals are compared via a communication channel. The current magnitude may be used by fault detectors to improve system security. For a two-terminal line, the relay currents during an external fault are approximately equal in magnitude. These currents are out-of-phase for external faults and in phase for internal faults. On a three-terminal line, the currents at the three relay locations may vary both in magnitude and phase angle. For this reason, phase comparison is not normally a good choice for multiterminal line protection.

5.5.3.8 Current differential

Some current differential relays are suitable for use on multiterminal lines. These relays compare the current magnitudes at all terminals by measuring the magnitudes and communicating these values among the terminals with a time alignment procedure to compensate for propagation delays. When suitable communications are available, current differential provides a good means of protecting for faults at any location on a multiterminal line. However, outfeed conditions must be examined to ensure that it will not cause sufficient restraint to prevent relay operation.

5.5.4 Transformer terminated taps

The effect of a transformer-terminated tap on transmission line relaying will depend on the transformer location with respect to the other terminals, the transformer connections, and the location of the breakers at the transformer. If the transformer is a zero-sequence source, the resulting zero-sequence current infeed must be considered when setting the remote ground distance relays or directional overcurrent relays. Since the presence of a zero-sequence source will also tend to reduce the zero-sequence voltage at the line terminals, the performance of zero-sequence directional units must be evaluated.

5.6 Application considerations of distance relays

5.6.1 Influence of load and fault resistance on distance relays

Distance relays discriminate between load and fault conditions by measuring both the magnitude and angle of the impedance presented to them. Figure 57 illustrates the importance of measuring the angle, as well as the magnitude, of the impedance. The relay with the circular mho characteristic shown will operate if the

Copyright © 2000 IEEE. All rights reserved.

Copyright The Institute of Electrical and Electronics Engineers, Inc.
Provided by IHS under license with IEEE
No reproduction or networking permitted without license from IHS
Not for Resale

measured impedance is inside the circle. It can be seen that a fault at the end of the transmission line (even with some resistance in the fault) presents an impedance to the relay with a much larger angle than a heavy load that may have the same magnitude of impedance, but with a small angle.

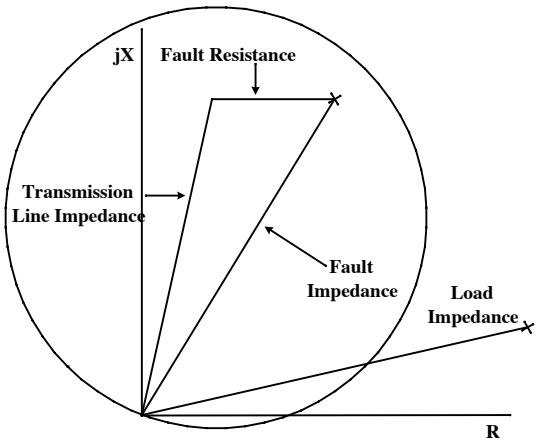

Figure 57—Effect of angle on impedance presented to a distance relay

The effect of the reduced angle of the load impedance is to put it outside the reach of the distance relay. It is important in the application of distance relays to ensure that the maximum load (smallest impedance) presented to the relay will be outside the operating characteristic, with some margin for security. The apparent impedance presented by loads should be considered under the lowest possible power factor and the lowest possible voltage and, if applicable, under power swing conditions.

It can also be seen from Figure 57 that as the fault resistance increases, it will become progressively more difficult to discriminate between a fault with high resistance and load. A variety of methods are used to allow a distance relay to detect faults with high resistance, without operating under load conditions. It is beyond the scope of this guide to discuss all these methods, but two of the most common ones are the use of specially shaped characteristics and special polarization techniques.

5.6.1.1 Specially shaped characteristics

There are an enormous number of specially shaped characteristics (some of which are described in 5.1.3) that can be used to make a distance relay more sensitive to faults with high resistance, while remaining insensitive to heavy loads with low apparent impedance. The principle by which special characteristic shapes achieve this can be understood by considering a quadrilateral characteristic, as shown in Figure 58.

As the load increases, the impedance seen by the relay moves along the load line. The distance relays with the mho and quadrilateral characteristics will misoperate if the load impedance reaches the points L and K, respectively. Figure 58 shows how the quadrilateral characteristic achieves good fault resistance coverage, while providing higher immunity to load. The resistive reach may be decreased further for the relay with the quadrilateral characteristic to reduce sensitivity to the load. However, this will cause the relay to be less sensitive to some faults inside the operating zone with a large fault resistance. For other principles, see Marttila [B17] and Schweitzer and Roberts [B19].

Copyright © 2000 IEEE. All rights reserved.
Copyright The Institute of Electrical and Electronics Engineers, Inc.
Provided by IHS under license with IEEE
No reproduction or networking permitted without license from IHS
Not for Resale

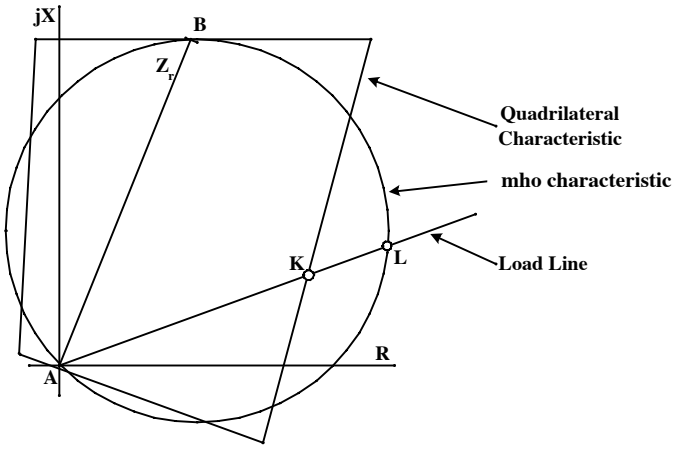

Figure 58—Quadrilateral characteristic

5.6.1.2 Special polarization techniques

Similar to the case for specially shaped characteristics, there are also an enormous number of polarization techniques used to increase sensitivity to faults with high resistance, while retaining immunity to load (Giuliante, McConnell, and Turner [B13]). Two techniques commonly used are cross polarization and memory polarization. An example of cross polarization is the use of quadrature polarization for ground distance functions. Quadrature polarization is helpful under unbalanced fault conditions, such as single line-to-ground, phase-to-phase, and phase-to-phase-to-ground. Memory polarization is also helpful for balanced three-phase faults. The effect of both techniques is to expand the operating characteristic, as shown in Figure 59.

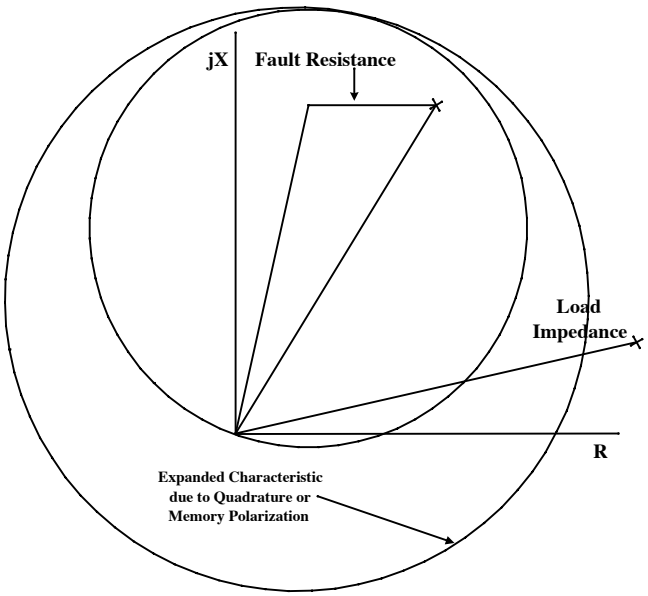

Figure 59—Expanded mho due to polarization techniques

Copyright © 2000 IEEE. All rights reserved.

Copyright The Institute of Electrical and Electronics Engineers, Inc.
Provided by IHS under license with IEEE
No reproduction or networking permitted without license from IHS
Not for Resale

It appears from Figure 59 that a relay with an expanded characteristic might operate under load conditions, as well as for faults behind the relay. The expanded characteristic shown is only applicable for faults in the forward direction; a different characteristic applies for faults in the reverse direction. The expansion due to quadrature polarization is only applicable to unbalanced conditions; therefore, quadrature polarization will not increase the sensitivity to balanced load impedances. The expansion of the characteristic due to the quadrature polarization will last for the duration of the fault; the expansion due to memory polarization, however, lasts only as long as the memory polarization. Because load conditions are steady state, memory polarization will not allow operation under load conditions.

5.6.1.3 Influence of a combined effect of load and fault resistance on an impedance measurement

Operation of a distance relay may be significantly influenced by the combined effect of load and fault resistance. The distance relay may misoperate for a forward external fault, or may not operate for an internal fault if the value of the fault resistance is too large. The value of the fault resistance may be particularly large for ground faults, which represent the majority of faults on overhead lines. Discussion in 5.6.1 has considered the fault resistance to present only a resistive component of impedance to the relay. However, this is not generally true, as the following discussion will show. The distance relay response to faults with fault resistance depends on a relay characteristic (shape and reach in the resistive direction) and the impedance measurement technique. The next clause describes the impact of load and fault resistance on the impedance measurement. The single-line diagram of the system, with a fault through a resistance (R_f) on a homogeneous line with an impedance (Z_L) between Buses G and H, is shown in Figure 60a. Parts of the system behind the local and remote terminals have been replaced with Thevenin equivalents.

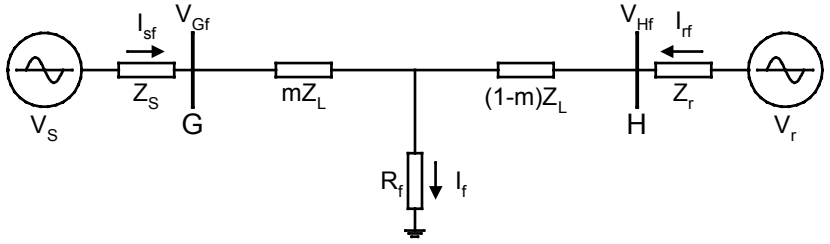

Figure 60a—Faulted system

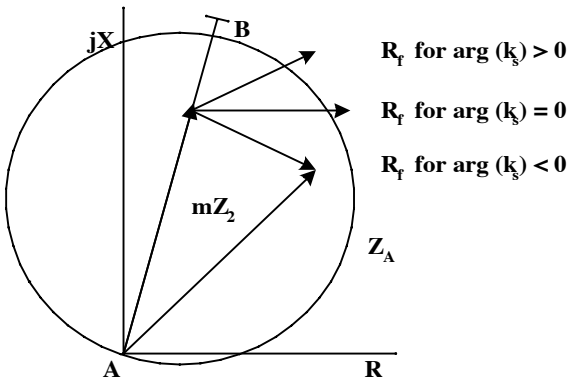

Figure 60b—Influence of remote infeed on distance measurement

--`,,`,,,,-`-`,,`,,`,`,,`---

Copyright © 2000 IEEE. All rights reserved.
Copyright The Institute of Electrical and Electronics Engineers, Inc.
Provided by IHS under license with IEEE
No reproduction or networking permitted without license from IHS
Not for Resale

The impedance (Z_G) measured at terminal G for the fault through resistance (R_f) is

$$Z_G = \frac{V_{Gf}}{I_{sf}} = \frac{mZ_L \times I_{sf} + R_f \times I_f}{I_{sf}} = mZ_L + R_f \times \left(\frac{I_f}{I_{sf}}\right) = mZ_L + R_f \times k_s \quad (4)$$

where

V_{Gf} is the voltage on Bus G during the fault;
I_{sf} is the current from Bus G during the fault;
Z_L is the total line impedance;
m defines how far the fault location is from Bus G as a percent of total line length;
R_f is the fault resistance;
I_f is the total fault current;
k_s is the ratio of the total current in the fault to the current contribution from Bus G.

The ratio, k_s, of the fault current, I_f, and the relay location current, I_{sf}, describes the effect of infeed from the remote terminal to the fault on the apparent impedance seen by a distance relay. Generally, the effect of the remote infeed will be to magnify the apparent resistance of the fault, because I_{sf} will never be larger than I_f.

However, the effect of remote infeed might not only increase the apparent resistance of the fault; it may also change the angle of the apparent fault impedance. If k_s is a complex number, the fault resistance appears as an impedance with a reactive component. The reactive component can be inductive or capacitive, depending on the argument of k_s. This argument will be zero if the current, I_{sf}, and the fault current, I_f, are in phase. That is the case if the infeed fault current from the remote source I_{rf} is either zero or in phase with the relay current, I_{sf}. Thus, the infeed fault current, I_{rf}, causes the reactance effect. The influence of the sign of the k_s argument on the impedance measurement is shown in Figure 60b. A large value of fault resistance causes the mho relay at terminal G to sense a fault that should be within the reach of the relay as being outside of the reach. If the fault is outside the reach in the forward direction, the relay may misoperate if the argument is negative.

5.6.1.4 Influence of fault resistance and load on the quadrature-polarized mho characteristic

The impact of the combined effect of load and fault resistance on operation of the distance relays depends on the relay characteristic. An example of a typical quadrature-polarized ground distance mho unit has been analyzed for a phase “a” to ground fault. The operating characteristics for load and no-load cases are shown in Figure 61. Input signals for a phase comparator unit that will operate when the operating signal lags the polarization signal by 90–270° are

$$V_{Gfa} - \left[I_{sfa} + \frac{Z_{L0} - Z_{L1}}{Z_{L1}} \times I_{sf0}\right] \times Z_C \qquad \text{operating signal}$$

$$j \times V_{Gbc} \qquad \text{polarization signal}$$

where

V_{Gfa} is the “a” phase voltage at Bus G during the fault;
I_{sfa} is the “a” phase current from Bus G into the fault;
Z_{L0} is the zero-sequence line impedance between Buses G and H;

Copyright © 2000 IEEE. All rights reserved.

Copyright The Institute of Electrical and Electronics Engineers, Inc.
Provided by IHS under license with IEEE
No reproduction or networking permitted without license from IHS
Not for Resale

Z_{L1} is the positive sequence line impedance between Buses G and H;

I_{sf0} is the zero-sequence current from Bus G into the fault;

Z_C is the relay setting impedance;

j is the square root of negative 1;

V_{Gbc} is the voltage at Bus G between phase “b” and phase “c.”

The relay operating characteristic has an offset, represented by length AL in Figure 61.

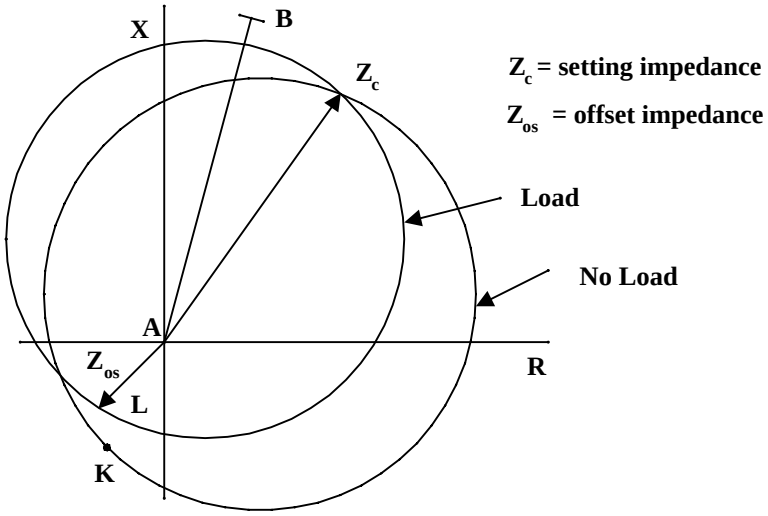

Figure 61—Influence of load on mho relay characteristic

The offset impedance, Z_{os}, may be expressed as follows:

$$Z_{os} = \frac{2d_{s2} \times Z_{s2} + D_{s0} \times Z_{s0}}{2d_{s2} + \frac{Z_{L0}}{Z_{L1}} \times d_{s0} + \frac{I_L}{I_{sf0}}} \quad (5)$$

where

Z_{s0} and Z_{s2} are the zero and negative-sequence source impedances;

Z_{L0} is the zero-sequence line impedance between Buses G and H;

Z_{L1} is the positive sequence line impedance between Buses G and H;

d_{s2} and d_{s0} are the current distribution factors in the negative and zero-sequence networks, respectively. They represent the ratio of the change in the current at the terminal caused by the fault (fault current minus prefault load current) to the total fault current;

I_L is the prefault load current.

The offset increases with larger value source impedances, which enables adjustment of the characteristic to larger fault resistance. The offset also depends on the load current, I_L. In Figure 61, the no-load case ($I_L = 0$)

Copyright © 2000 IEEE. All rights reserved.
Copyright The Institute of Electrical and Electronics Engineers, Inc.
Provided by IHS under license with IEEE
No reproduction or networking permitted without license from IHS
Not for Resale

is compared to the load case. The offset for the no-load case is represented by the distance from point A to point K.

5.6.1.5 High-resistance faults

Fault resistance is usually small in the case of interphase faults. On the other hand, ground faults may introduce high resistance in the fault loop. The most common faults on overhead lines are ground faults that are caused by flashover of an insulator. The fault loop for ground faults includes tower impedance, tower footing resistance, and arc resistance. Tower footing resistance can vary from less than one ohm to several hundred ohms.

The fault resistance may be particularly large in the case of tree contacts and conductors lying on the ground. The problem with tree contacts may be minimized by appropriate maintenance of the transmission lines. Often times, distance relays cannot be set sensitive enough to detect these high-resistance faults. For this reason, sensitive ground overcurrent relays can be used.

Arc resistance depends significantly on the value of fault current and the length of the arc. The resistance increases as an inverse function of the current and roughly proportionally with the length. Since the length of the arc varies with time due to wind and magnetic forces, it is difficult to estimate the maximum length (although the minimum length is sometimes assumed to be the distance between conductors).

Various references, such as Elmore [B21], Mason [B26], and the *Protective Relays Application Guide* [B27], give different formulas to calculate approximations of the arc resistance. The following two formulae have been derived from the noted references and converted to metric units. In all formulae, R_{arc} is the arc resistance in ohms, I is the current in amperes, and L is the estimated arc length in meters.

[B21] gives the arc voltage of 440 V/ft for currents in excess of 100 A, which leads to a resistance of $R_{arc} = 1444 \times L/I$.

The *Protective Relays Application Guide* [B27] and Mason [B26] give the arc resistance as $R_{arc} = 2667 \times L/1.4I$ (after the units of length have been converted from feet to meters, and the arc voltage has been converted to arc resistance). Mason [B26], however, qualifies the formula to be valid only for fault currents less than 1000 A. For currents greater than 1000 A, it defines an arc voltage of about 550 V/ft, which leads to a resistance of $R_{arc} = 1804 \times L/I$.

It is, therefore, easy to understand that no exact formula exists for calculating arc resistance per unit length. This is not a severe limitation, because there is also no precise means of determining arc length (outside of laboratory conditions). A conservative approach would be to make generous assumptions about arc length and use a formula that gives maximum resistance for the assumed length.

5.6.2 Possible loss of directionality on external phase-to-phase-to-ground faults

Zero-sequence current compensation in the operating quantity of ground distance relays is used to allow the ground distance relay to measure the proper impedance to the fault, based on the positive sequence impedance of the line. However, this same zero-sequence current compensation factor may cause a misoperation of the forward-looking element of the unfaulted phase during an external double line-to-ground fault (Alexander and Andrichak [B8]).

Consider the three-terminal line application shown in Figure 62. The currents and voltages at Breaker 3 for the external BCG fault on Bus B are shown in Table 1.

--`,,`,,,`-`-`,,`,,`,`,,`---
Copyright © 2000 IEEE. All rights reserved.

Copyright The Institute of Electrical and Electronics Engineers, Inc.
Provided by IHS under license with IEEE
No reproduction or networking permitted without license from IHS
Not for Resale

Table 1—Currents and voltages for Breaker 3

Sequence	Phase
I_1 = 26.6 A ∠ 93°	I_A = 0.3 A ∠ –96°
I_2 = 19.1 A ∠ –89°	I_B = 42.5 A ∠ –13°
I_0 = 7.8 A ∠ –81°	I_C = 40.0 A ∠ –161°
V_1 = 28.0 V ∠ –1.3°	V_{AG} = 84.0 V ∠ –1.3°
V_2 = 28.0 V ∠ –1.3°	V_{BG} = 0.0 V ∠ 0°
V_0 = 28.0 V ∠ –1.3°	V_{CG} = 0.0 V ∠ 0°

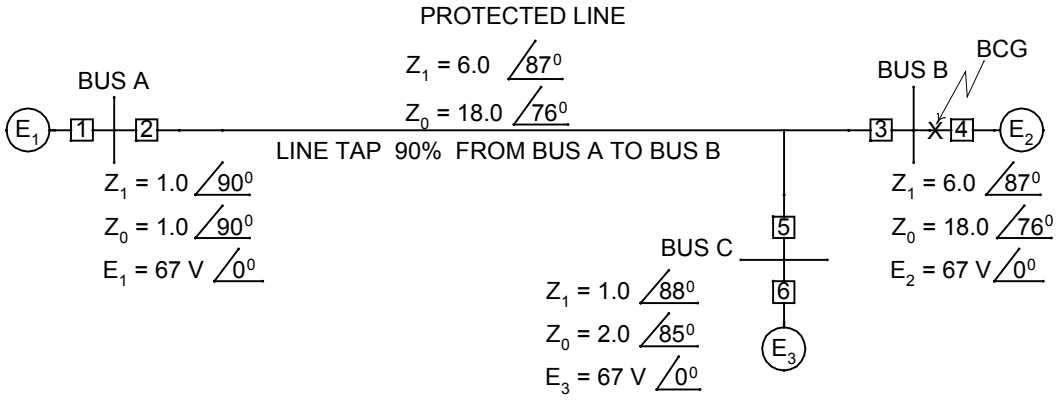

Figure 62—External BCG fault on a three-terminal line

The operating signal for a typical ground mho distance function is

$$(I_A \times Z_{R1} + K_0 \times I_0 \times Z_{R0} - V_{AG})$$

where

I_A is the phase A current from Table 1;

I_0 is the zero-sequence current from Table 1;

V_{AG} is the phase A to ground voltage from Table 1;

Z_{R1} is the positive sequence impedance reach of the mho function = 6.0 ∠ 85°;

K_0 is the zero-sequence current compensation factor for the mho function = 3;

Z_{R0} is the zero-sequence impedance reach of the mho function = 6.0 ∠ 75°.

The voltage phasors comprising the operating signal for a phase A mho ground distance function are shown in Figure 63 for a positive sequence reach setting of 6 Ω. The polarizing signal, V_{pol} = 67 ∠ 0°, is assumed to be equal to the prefault value of V_{AG}. Note that magnitude of the zero-sequence current term is larger than that of the restraint voltage V_{AG} and, therefore, this unit will operate. For the conditions of this example, the positive sequence impedance reach of the function is set to only 100% of the positive sequence impedance of the protected line, which is unrealistically short for an RO function. The choice of polarizing signal for the ground distance relay will have little effect on performance for this situation;

Copyright © 2000 IEEE. All rights reserved.
Copyright The Institute of Electrical and Electronics Engineers, Inc.
Provided by IHS under license with IEEE
No reproduction or networking permitted without license from IHS
Not for Resale

other means must be used to prevent misoperation, such as employing a directional element to supervise the mho elements.

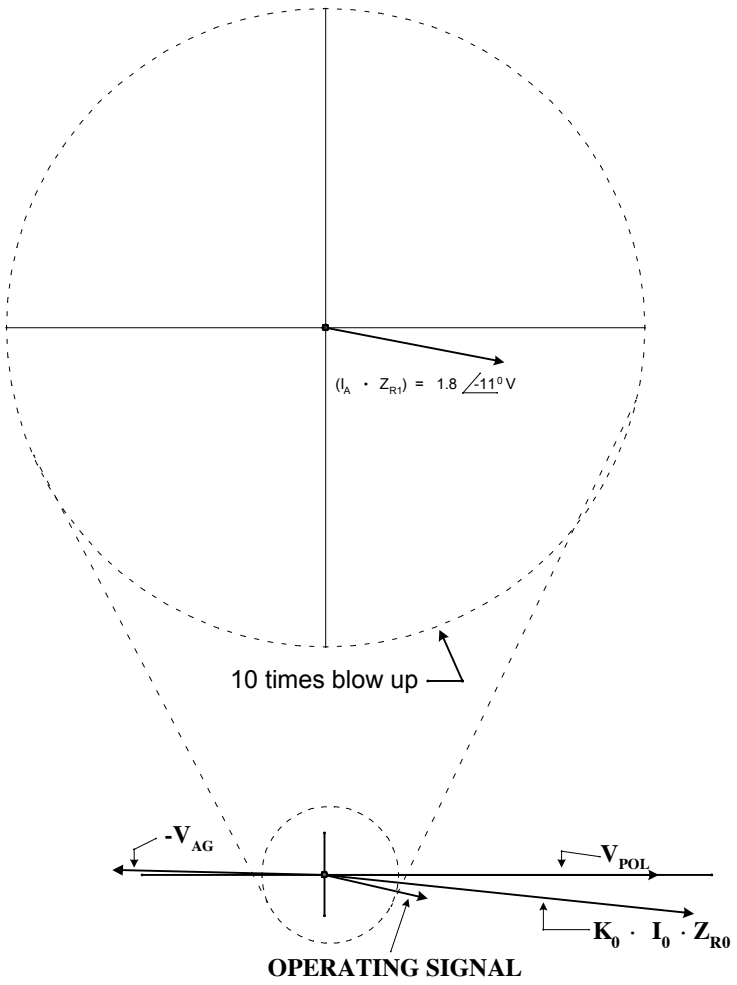

Figure 63—External BCG fault on a three-terminal line

5.6.3 Effect on distance relays of a transformer in the line

The influence of a transformer that is in the protective zone of a distance relay depends on the nature of the connection of the transformer, the location of the instrument transformers, and the measuring principle used for the relay.

When the transformer connection is wye-wye, with the neutral grounded on each winding, and the CTs and VTs feeding the relays are located such that the transformer is in their protective zone, no change in connections is required. The setting, however, must include the transformer impedance plus the portion of the line impedance that the relay is intended to cover. For ground faults on the line, zero-sequence current will, of course, be contributed through the transformer only if a path for the flow of zero-sequence current exists in the source behind the relay location.

Copyright © 2000 IEEE. All rights reserved.

Copyright The Institute of Electrical and Electronics Engineers, Inc.
Provided by IHS under license with IEEE
No reproduction or networking permitted without license from IHS
Not for Resale

If the transformer is wye-wye grounded with a delta tertiary, it will supply zero-sequence current to a line fault. If the relay CT location does not allow the relay to measure this current, it will underreach and must be compensated for in setting the relay.

For a delta-delta transformer, ground faults in the delta winding on the relay side may be detected by the ground distance relays; however, ground faults on the other side will not be detected in this way. Phase distance relays are not affected by the presence of the delta-delta connected transformer, except when needed to include the transformer impedance in the setting of the relay.

When a distance relay is supplied by instrument transformers that have a delta-wye or a wye-delta transformer between them and the protected transmission line, care must be exercised in the connection of the instrument transformers and in the setting of the relays. Ground distance relays are unsuitable for reaching through the transformer bank. Phase distance relays may be suitable, depending on their operating characteristic (Blackburn [B20]).

Phase distance relays that utilize compensated positive sequence voltage and compensated negative-sequence voltage independently are unaffected by the presence of the wye-delta transformer, except for the need to include the transformer impedance in the setting of the relay.

Where the phase distance relays use CTs and VTs on the wye side of the transformer, and the protected transmission line is connected to the delta winding, relays that customarily use phase-to-phase voltage and delta current (e.g., I_A–I_B) must, in this application, use phase-to-ground voltage and phase current to achieve a distance determination equivalent to that without a delta-wye transformer. Again, the impedance of the transformer must be included in the setting.

In cases involving wye-delta or delta-wye transformers, with the CTs on one side of the transformer and VTs on the other, special care must be exercised. Distance is measured from the point of connection of the VTs, and directionality is established by the location of the CTs.

With the VTs on the line side of the transformer bank and the CTs on the other side, the proper voltage will be applied to the relay; however, the currents will contain an error in magnitude and angle. The angle is corrected by using delta-wye auxiliary CTs to compensate for the 30° phase shift in the power transformer. In setting the relay, the effective overall CT ratio must be used. One ampere of relay current corresponds to some value of transmission line current. This value is the effective overall ratio and takes into account the auxiliary CTs, the main CTs, and the power transformer itself. The transformer impedance is excluded from the calculation of the phase distance setting because of the measurement of impedance from the VT location.

With the CTs on the line side of the transformer and the VTs connected on the other side, the transformer impedance must be included in the setting of the relay. The 30° phase shift of the power transformer bank must be duplicated, either through the connection of the main VTs or through the use of a set of auxiliary VTs. The overall VT ratio that must be used in calculating the impedance setting of the distance relays is the ratio of the line-to-line voltage of the transmission line to the line-to-line voltage that appears at the relay. This takes into account the auxiliary VTs, the main VTs, and the power transformer, giving the identical effect to that which would exist if the VTs were connected directly to the protected line. The connections of the VT, or any auxiliaries, should not contain a delta winding that would allow zero-sequence current to flow for unbalanced primary voltages. This would create a grounding transformer, and it would no longer have VT accuracy.

5.6.4 Consideration of voltage transfer for distance relays

Some applications of distance relaying result in voltage sources for these relays being provided from a location other than on the protected line. This arrangement is not recommended but is sometimes used. Bus arrangements, such as double bus or breaker-and-a-half, may use a transfer scheme to switch the potential source to the relays on one line between two of these buses. The transfer scheme may be automatic or

--`,,`,,,,-`-`,,`,,`,`,,`---

Copyright © 2000 IEEE. All rights reserved.
Copyright The Institute of Electrical and Electronics Engineers, Inc.
Provided by IHS under license with IEEE
No reproduction or networking permitted without license from IHS
Not for Resale

manual. Distance relays that lose their voltage source during a transfer operation should remain secure during the transfer.

The relays could remain secure by using current supervision functions, with the current level detector set above load current, or by using loss of potential (LOP) logic. When relying on LOP logic, the user should ascertain that the relay logic will correctly respond to the three-phase loss of potential and block tripping during a manual transfer. If an automatic transfer scheme is used, the user should also ascertain the LOP logic will respond correctly, remembering that a fault may have caused the low-voltage initiating the transfer and will be accompanied by fault current that may be in the trip or non-trip direction.

5.6.5 Loss of voltage

5.6.5.1 Loss of voltage when VT fuse blows

The voltage connections and circuits of distance relays are generally protected by fuses or sensitive miniature circuit breakers. These protective devices are connected between the VT secondary windings and the relay terminals. A fuse will blow or the circuit breaker will open due to a fault on the voltage connections or circuit wiring. Distance relays will have a tendency to operate when one or more voltages is lost.

Various techniques can be used to inhibit the operation of distance protection or give an alarm when the voltage circuit becomes open circuited.

a) When relays do not have to operate on less than load current, instantaneous overcurrent units set higher than load current (referred to as fault detectors) can be used to prevent tripping for a blown fuse during normal load conditions. The overcurrent relay contacts are in series with the trip circuit.

b) Measurement of voltage across each fuse can be used to prevent tripping. Under normal conditions, the measuring circuit of the voltage-monitoring relay is short-circuited by the fuse and can not be energized. When one or more fuses is removed or open circuited, there will be a voltage across the input circuits of the voltage-monitoring relay and it will operate. The voltage-monitoring relay will commence its operation only after the fuse has blown.

c) Voltage supervision can also be accomplished by using sequence voltages and currents. Negative and zero-sequence voltages and currents are measured at the distance relay terminals. The distance protection is blocked when negative or zero-sequence voltage is present without the presence of negative or zero-sequence current. It must be noted that this technique will not detect the loss of all three voltages. If this is required, technique a or b should be used in conjunction with this method.

d) In cases where voltage circuits are protected by miniature circuit breakers, auxiliary contacts from these breakers can be used to indicate opening of the breaker and, therefore, inhibit the operation of distance protection.

5.6.5.2 Absence of voltage due to close-in faults

When a fault occurs very close to a relay, the voltage supplied to the relay will be small or even zero. The impedance measured by the relay will be zero, regardless of whether the fault is in the forward direction or the reverse direction. In other words, the relay will lose its directionality. This can be corrected by using memory action, or by supplementing the applied voltage to the relay with a proportion of the voltage of the healthy phase(s). This latter technique is known as cross polarization (Giuliante, McConnell, and Turner [B13]).

Cross polarization, however, will not be effective if a close-in fault involves all three phases and all three-phase voltages collapse to zero. Memory action can be applied to make a meaningful determination of the direction of the fault. In memory action, the polarizing voltage is the prefault voltage of the faulted phases. Most distance relays incorporate cross polarization, memory action, or both to handle close-in faults.

Copyright © 2000 IEEE. All rights reserved.

Copyright The Institute of Electrical and Electronics Engineers, Inc.
Provided by IHS under license with IEEE
No reproduction or networking permitted without license from IHS
Not for Resale

Neither memory action nor cross polarization will work in a situation where the line is switched on and a close-in, three-phase fault exists. Under these circumstances, overcurrent relays could be used to supplement the distance relays (see 5.3.3).

5.7 Relay considerations for series compensated lines

Series capacitors are applied to improve stability, provide better load division on parallel transmission paths, reduce transmission losses, reduce voltage drop on severe system disturbances, or increase power transfer capability (Jancke, Fahlen, and Nerf [B52]). The impedance of a series capacitor usually varies between 25% and 75% of the line impedance. The capacitors may be installed at one end of the line, both ends of the line, or midline. Capacitor over-voltage protection is a part of capacitor bank protection. The over-voltage protection consists of a parallel power gap and/or a MOV (Courts, Hinyorani, and Stemler [B50]). The purpose of this protection is to limit the voltage applied to the capacitor if fault or load current will produce voltages high enough to damage the capacitor. A bypass breaker may also be used in the design for non-fault-related capacitor protection, as well as for providing flexibility to the operating personnel. Line protection schemes must take into consideration the possibility of power gap or MOV failure, unsymmetrical gap flashing, or MOV conduction (Elmore and Andersson [B51]; Alexander, Andrichak, Rowe, and Wilkinson [B49]). Current differential and phase comparison relay schemes will generally work properly, but may have problems on long line applications. Charging current will reduce the sensitivity of the relay. Since the series compensated lines may be long and heavily loaded, the phase relationship of currents between the two ends should be evaluated very carefully in order to determine relay settings.

Special care must be taken in choosing and setting distance relays (Marttila [B53]), because the protected line impedance is modified by the series capacitor and varies depending on the state of the capacitor protection. However, the effects of the series capacitor are not limited to the power system frequency. Transmission line series capacitors and their associated parallel gaps and MOVs are serious transient generators, producing an exchange of high-frequency current through various parts of the power system when the gaps flash or when the MOVs conduct.

The effects of the series capacitors on other relays in the nearby system should also be considered, even though they are not applied directly on a series compensated line.

5.7.1 Current inversion

A current inversion, or current reversal, is said to occur when the current for an internal fault appears to be entering at one end of the line and leaving at the other end, just as it would occur for an external fault. This can occur for a fault at point 2 shown in Figure 64a. if the source impedance, X_A, is less than the capacitive impedance, X_C. This may be an impractical condition for a bolted fault, because the large fault current should ensure rapid bypassing of the capacitors. However, in the case of single line-to-ground faults with large values of fault resistance, the fault impedance can reduce the fault current below the bypass level. A current inversion may affect the performance of both distance protection and phase comparison protection. The protection complications caused by current inversion are significant. It is preferable, from a protection point of view, for the series capacitor size and location to be selected such that X_A is always larger than X_C. Locating the series capacitor some distance away from the line terminal will reduce the probability that $X_A < X_C$.

Copyright © 2000 IEEE. All rights reserved.
Copyright The Institute of Electrical and Electronics Engineers, Inc.
Provided by IHS under license with IEEE
No reproduction or networking permitted without license from IHS
Not for Resale

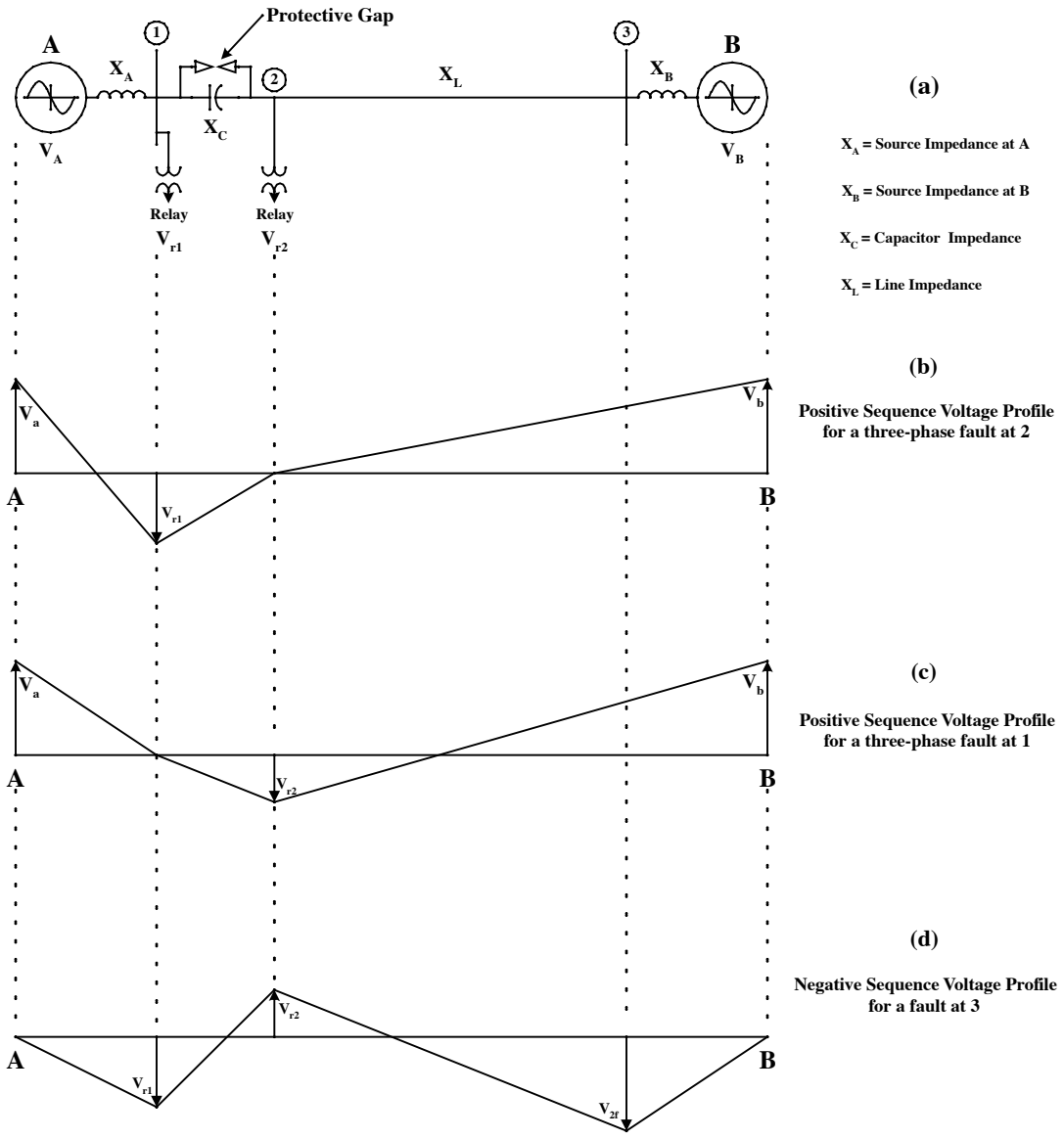

Figure 64—Voltage inversion

5.7.2 Voltage inversion

A voltage inversion, or reversal, will occur for a fault near a series capacitor when the impedance from the relay potential location to the fault is capacitive rather than inductive. As a result, the voltage applied to the relay will be 180° out-of-phase from what would be considered the "normal" position. Because distance relays are designed to work on inductive systems, this voltage reversal can have an adverse effect on the relay performance.

Consider the system shown in Figure 64a and assume that a distance function is applied at Station A, looking toward Station B, and that its potential is supplied from the line side of the series capacitor, V_{r2}. For a three-

Copyright © 2000 IEEE. All rights reserved.

Copyright The Institute of Electrical and Electronics Engineers, Inc.
Provided by IHS under license with IEEE
No reproduction or networking permitted without license from IHS
Not for Resale

phase bus fault at Station A (at point 1 as shown in Figure 64c), the voltage applied to the relay will be the drop across the series capacitor and, consequently, will be reversed from the position normally encountered on an inductive system. A phasor diagram for this condition, with the relay reach (Z) greater than the capacitive reactance (X_C), is shown in Figure 65. The distance function will operate when the operating quantity (IZ – V) and the polarizing quantity are substantially in phase. Many distance relays will use some degree of memory polarization (shown as prefault voltage, E, in Figure 65) as well as some degree of actual voltage at the relaying location (shown as V_{r2} in Figure 65). The duration of memory polarization is normally limited to the time required for an instantaneous decision as to the direction and location of the fault. It is now apparent that the performance of a distance relay in the presence of voltage inversions is highly dependent on the type of polarization. For instance, if a relay is polarized with memory of full prefault voltage in combination with actual relay voltage, and has a finite memory time, two conditions should be noted, as follows:

a) The polarizing voltage will initially be in phase with the source voltage (E) because the memory voltage is larger than the actual relay voltage. For this condition, the distance function will not operate as long as the memory voltage lasts.
b) After the memory time, the polarizing voltage will be equal to the applied voltage, and the distance functions will operate.

For this type of relay, for the conditions noted above, the function will operate correctly on a dynamic basis, but will operate incorrectly after the memory time expires. However, for other types of relays that may use a reduced amount of memory voltage, it is not certain that they will operate correctly even on a dynamic basis.

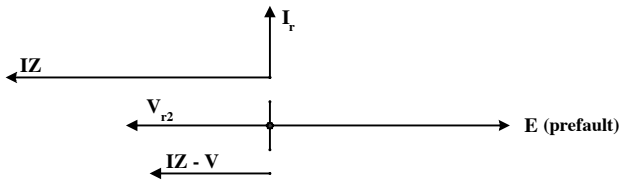

Figure 65—Phasor diagram of voltage inversion example

A similar condition can occur for an internal fault at 2 (see Figure 64b) when the relay potential is supplied from the bus side of the series capacitor, V_{r1}. For the same type of relay as discussed previously, two conditions should again be noted, as follows:

— The polarizing voltage will initially be in phase with the operating quantity (IZ – V) because of the memory. For this condition, the distance function will operate as long as the memory voltage lasts.
— After the memory time, the polarizing voltage will be equal to the applied voltage, and the distance functions will not operate.

A voltage reversal can also occur in the zero and negative-sequence networks if the net impedance, as measured from the relay potential location back to the source, is capacitive. Consider the system in Figure 64a. For a single line-to-ground fault at 3, the negative and zero-sequence voltages at the relay potential location at 2 will be reversed if the source impedance is less than the reactance of the series capacitor. Figure 64d shows the voltage profile for the negative-sequence network, assuming that X_A is less than X_C. A negative-sequence directional function using that potential and looking toward station B would not operate correctly for this condition because of the voltage reversal. The directional function can be designed with compensating features to overcome the effects of the voltage reversal and so made to operate properly for the conditions shown. Note that the voltage on the bus side of the capacitor is not reversed; hence, a directional function that uses the bus side potential will operate correctly for this condition. However, for a single line-to-ground fault at 2, the potential on the bus side of the series capacitor will be reversed and, therefore, an

Copyright © 2000 IEEE. All rights reserved.
Copyright The Institute of Electrical and Electronics Engineers, Inc.
Provided by IHS under license with IEEE
No reproduction or networking permitted without license from IHS
Not for Resale

uncompensated directional function at that location will not operate properly. A compensated function, however, will operate correctly. The difficulties in ensuring correct response of directional functions illustrate another difficulty in protecting systems where X_A is less than X_C, and reinforce the desirability of designing the capacitor application such that X_A is always larger than X_C.

5.7.3 System transients

On lines with series compensation, the fault current may include a significant transient ac component with a frequency that is determined by the series capacitance of the system and the system inductance. The frequency of this transient is generally lower than the fundamental frequency of the system, because the value of X_C is less than the value of total impedance to the fault. In theory, the transient could be higher than the fundamental frequency fault near point 2 in Figure 64 if X_C is greater than X_A; however, the high currents developed during a fault on such a system would cause operation of the series capacitor protection. The bypassing of the series capacitor would preclude the higher frequencies.

A simple approach to setting distance relays on series compensated lines would be to set them based on the "compensated impedance" of the transmission line. This approach is usually too simplistic in that it deals only with fundamental frequency signals and ignores the effects of the low-frequency transients. The effects of low-frequency transients on the impedance measured by the distance relay are discussed in Mooney, Hou, Henville, and Plumtre [B54], Elmore and Andersson [B51], and Alexander, Andrichak, Rowe, and Wilkinson [B49]. In Alexander, Andrichak, Rowe, and Wilkinson [B49], a case is presented in which the Zone 1 will operate for any reach setting applied to the Zone 1 function. Figure 5 of Elmore and Andersson [B51] shows the transient impedance plot for a compensated line. The low-frequency transients of a series compensated system cause the spiraling of the impedance trajectory; this spiraling, in turn, may cause the Zone 1 units to over-reach. In Example I of Mooney, Hou, Henville, and Plumtre [B54], it is shown that the Zone 1 reach had to be reduced to approximately 50% of the "compensated impedance" in order to prevent operation due to the low-frequency transients; thus, the setting of the Zone 1 function cannot be based solely on the fundamental frequency "compensated impedance" of the line. The exact nature of these low-frequency transients varies with the power system and fault location. Transient tests of protection systems on lines with series compensation, and on lines adjacent to series compensated lines, are usually very helpful in ensuring reliable applications and settings. These transient tests should include full modeling of the transmission system around the capacitor, the series capacitor, and its overvoltage protection systems so that all relevant transient signals are included in the tests.

5.8 Single-phase tripping

In a single-phase tripping scheme, only the faulted phase of the transmission line is opened for a single line-to-ground fault, while all phases are tripped for any interphase fault. Thus, the two ends of the transmission line remain connected by two of the phases. Stability studies typically show that there is improvement in system stability and power transfer capability when single-phase tripping is applied. A more detailed discussion of this subject and the various schemes used to accomplish single-phase tripping is provided in IEEE PSRC Report [B61] and Shperling and Fakheri [B62].

Application of single-phase tripping requires attention to a number of details that are not considered for three-phase tripping schemes, or that need special consideration for single-phase tripping. These include

— Faulted phase selection
— Arc deionization
— Automatic reclose considerations
— Pole disagreement
— Effects of unbalanced currents

Copyright © 2000 IEEE. All rights reserved.

Copyright The Institute of Electrical and Electronics Engineers, Inc.
Provided by IHS under license with IEEE
No reproduction or networking permitted without license from IHS
Not for Resale

5.9 Application of distance relays to short lines

The problems associated with the use of distance relaying for protection of short lines can be attributed to the low voltages available to the distance relay for faults along the line (Alexander, Andrichak, Rowe, and Wilkinson [B55]; Korejwo, Synal, and Trojal [B56]). More precisely, low voltages are caused by a high SIR, rather than a short line.

5.9.1 Source-to-line impedance ratio

The SIR is the ratio between the impedances of the source behind the distance relay and the line impedance the relay is protecting. The ratio could be high due to low line impedance (short lines), weak source behind the line, or a combination of both. A higher SIR leads to lower voltages at the relay location. A high SIR would lead to lower currents if the higher ratio were due to higher source, rather than lower line impedance. Lower voltages and currents affect the speed, directional integrity, and steady state and transient reach of distance relays.

5.9.2 Speed of operation

Figure 66 shows a typical distance relay operating speed versus fault location for different SIRs. Notice that the higher the SIR, the slower the operating speed of the relay. Slower speed could make distance relay application unacceptable from a system stability viewpoint, or from a reliability of Zone 1 operation viewpoint. The latter would be a problem if the memory circuit duration were shorter than the relay operating time. Unreliable Zone 1 operation could mean no operation for internal faults.

5.9.3 Directional integrity

At very low voltages, the directional integrity of distance relays depends on the duration of the memory circuit, which is typically a few cycles. Because of slower relay speed at low voltages, the memory circuit action may expire before the relay has operated.

Slow speed is not the only cause of loss of directional integrity. Some distance relays determine fault direction by comparing the angle of the operating quantity, IZ – V, with the polarizing quantity, V_{pol}. This type of relay could operate for a three-phase fault just behind the relay if either the polarizing voltage or the IZ – V quantity reverse direction because of the influence of CVT transients. If the relay is without memory circuit (i.e., derives V_{pol} from the CVT), CVT transients on this zero-volt fault could result in reversal of the polarization signal. For a relay with adequate memory circuit action, relay operation on a reverse fault could still take place if the operating quantity, IZ – V, reverses direction. This will be the case if the CVT transient output voltage, V, predominates because of small IZ quantity. The quantity IZ could be small due to low fault current or a small relay setting.

5.9.4 Transient over/under reach

Notwithstanding directional integrity, a small IZ quantity compared to CVT transient voltage for a fault at the limit of relay reach could result in relay underreach (if the output voltage is momentarily higher than it should be) or overreach (if the output voltage is momentarily lower than it should be). For pilot schemes, an obvious solution to the underreaching problem would be to set the overreaching distance element significantly beyond the protected line distance. This would increase the operating quantity and thus improve the reliability and speed of the distance-based scheme. Care must be taken to ensure that this extended setting will not cause the relay to operate under heavy load conditions. One solution to the overreach problem would be to shorten the Zone 1 relay's reach to provide adequate margin for CVT transient voltage. However, many solid state and digital relays incorporate filters and logic, which will minimize this problem.

Copyright © 2000 IEEE. All rights reserved.
Copyright The Institute of Electrical and Electronics Engineers, Inc.
Provided by IHS under license with IEEE
No reproduction or networking permitted without license from IHS
Not for Resale

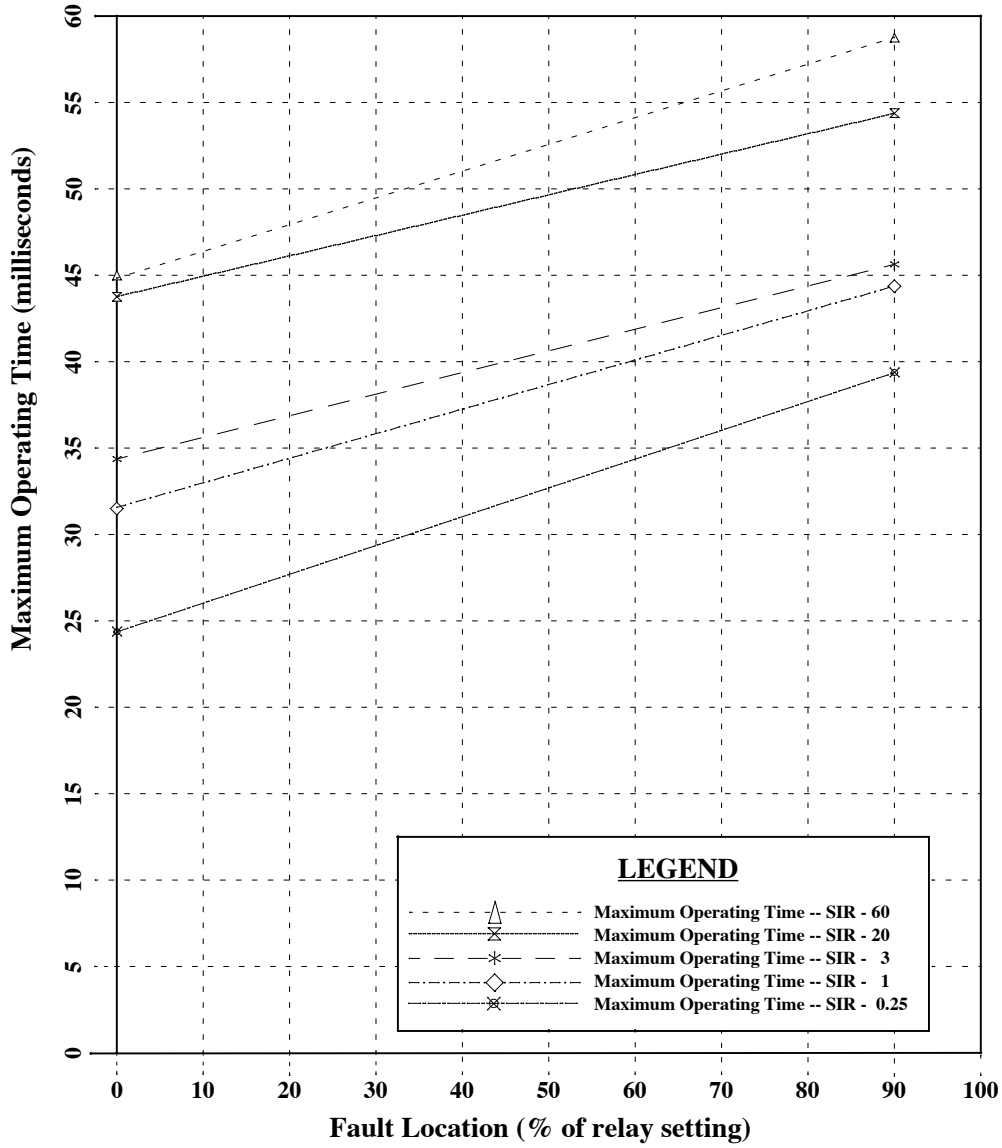

Figure 66—Operating time vs. fault location

5.9.5 Distance relay underreach due to effects of fault arc resistance

The actual value of the arc resistance is difficult to predict. It is known, however, that the resistance of the arc increases with the length of the arc and has an inverse relationship to current in the arc. The voltage drop in the arc is thus independent of the line length or the fault current. With a higher SIR, the voltage drop in the arc could be significant compared to the line voltage drop (possibly several times). This could mean no relay operation if the total voltage drop causes the impedance seen by the distance relay to fall outside its characteristics.

Copyright © 2000 IEEE. All rights reserved.

Copyright The Institute of Electrical and Electronics Engineers, Inc.
Provided by IHS under license with IEEE
No reproduction or networking permitted without license from IHS
Not for Resale

5.9.6 Distance relay minimum settings

The problem of low settings of line distance relays is that for lines that are very short or have a high SIR, available fault current and voltage at the relay location may not provide adequate operating margins. All distance relays have minimum settings criteria that must be met for proper operation. The following concerns should be addressed:

a) **Impedance characteristic.** Minimum fault operating currents must be know; usually, the shorter the reach, the greater the minimum current required to function. The apparent reach setting of the relay decreases with lower relay terminal voltages (Figure 67a), causing the relay to underreach.

b) **Directional action.** Minimum polarizing voltages must be known. Sensitivities in the range of 1% of rated voltage may be required; however, at this sensitivity, misoperations may occur for reverse faults due to the effect of arc drop.

c) **Memory action.** The memory circuitry of the relay is used for low-voltage conditions by supplying a prefault voltage for polarizing. This circuit may have memory action that lasts only a few cycles.

d) **Operating time.** Tripping time (Figure 67b) may vary with the distance to the fault, the basic minimum reach setting, the fault current magnitude, and the magnitude of relay voltage prior to the fault. Usually, the lower the ratio of $Z_{apparent}$ to $Z_{setting}$, the faster the relay operates except for low current conditions. Under conditions of low current, the relay operate time may actually increase.

e) **Maximum torque angle.** Cable circuits may have a very small line impedance angle, especially for pipe-type cables. This may require a maximum torque angle that is not available on the relay and, thus, necessitate using a different range or impedance characteristic (i.e., quadrilateral) relay.

f) **Continuous ampere rating.** The engineer must be aware of the continuous operating characteristics for a particular setting. It is possible for a setting to violate the continuous ampere rating, especially if the relay is an electromechanical style.

g) **CT and VT errors.** Due to errors in the CTs and VTs, it is possible for a marginal setting to be unusable. On systems where the available voltages and currents are low, CT and VT errors may further reduce the available quantities to the relay.

h) **Relay settings.** When the protected line is short, arc impedance must be incorporated into the settings for Zones 2 and 3. It may not be possible to increase the Zone 1 reach setting because of possible overreach of remote terminals, although some relaying principles automatically adapt to this need.

As each distance relay has its own characteristics, it may be necessary to perform fault studies under minimum conditions to confirm that the relay functions properly. If the relay does not meet the minimum requirements, then alternative relay schemes, such as current differential, phase comparison, or pilot-wire, should be considered.

Copyright © 2000 IEEE. All rights reserved.
Copyright The Institute of Electrical and Electronics Engineers, Inc.
Provided by IHS under license with IEEE
No reproduction or networking permitted without license from IHS
Not for Resale

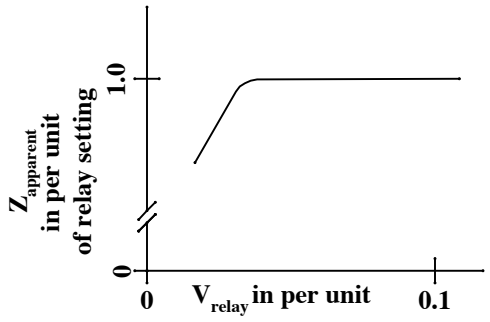

Figure 67a—Apparent relay reach vs. relay voltage

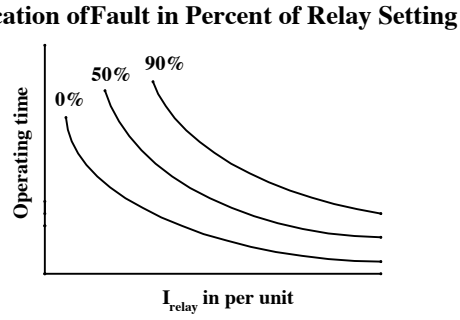

Figure 67b—Variation of operating time with distance to the fault

5.10 Relay considerations for system transients

5.10.1 Nature of transients

Sporadic dampened phenomena occurring in electrical systems are generally described as transients and surges. As used here, the two terms are synonymous and interchangeable, and will be referred to as “transients” in the following text.

Transients may be dampened oscillatory or unidirectional and occur when some disturbance takes place in an electrical circuit, such as the opening or closing of a switch or breaker. From a line protection viewpoint, important transients may originate in the primary equipment, in the secondary control equipment, or in the instrument transformers connecting the two. This subclause discusses the causes and effects of transients originating

a) In the primary equipment and converted faithfully to secondary levels by instrument transformers (primary transients).
b) In the primary equipment influencing secondary control wiring by inductive or capacitive coupling (coupled transients).
c) Due to the performance of instrument transformers (instrument transformer transients).
d) In the secondary equipment (secondary transients).

Copyright © 2000 IEEE. All rights reserved.

Copyright The Institute of Electrical and Electronics Engineers, Inc.
Provided by IHS under license with IEEE
No reproduction or networking permitted without license from IHS
Not for Resale

5.10.2 Primary transients

5.10.2.1 DC offset in the current

When a fault occurs, dc offset may be present as a result of the requirements that no instantaneous change of current can occur in an inductance, and that the current must lag the voltage by the natural power factor angle of the system. The dc offset decays with a time constant equal to the X/R ratio of the system supplying the fault. The magnitude of the initial offset depends on the point on wave at which the fault is initiated. Figure 68a shows a fault current initiated about 45° before a negative peak, in a system with a time constant of 100 ms.

Figure 68b shows a fault initiated at a negative current peak, in a system with a time constant of 50 ms. It can be seen that the magnitude of the symmetrical current is the same, while the initial offset is larger, and the decay rate is faster than in the previous figure. This transient is often referred to as “transient dc offset.”

Transient dc offset has the potential to cause overreach of instantaneous line protection systems. However, the phenomenon is well understood, and modern line protection systems are usually designed to effectively reject the dc component. Otherwise, the manufacturer should be able to provide application instructions to accommodate its presence by choosing suitable settings. Transient dc offset can also cause transient saturation of CTs (see 5.10.4).

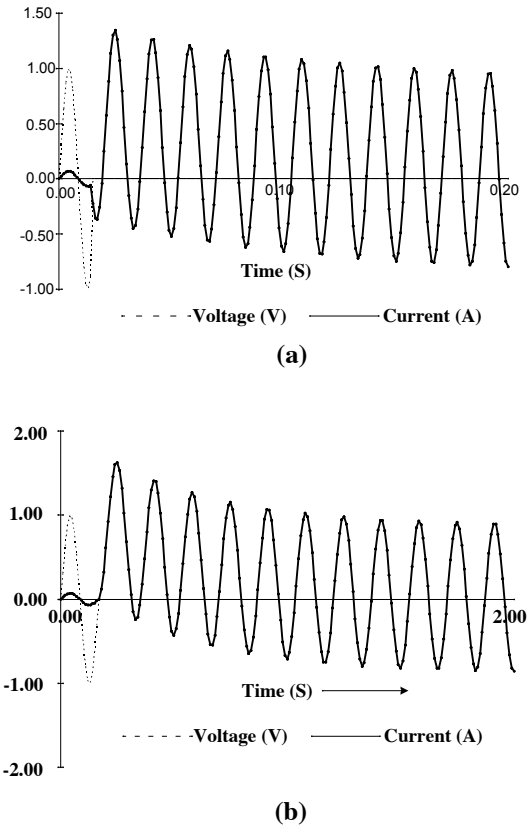

Figure 68—DC offset in the current: (a) Half offset, T = 100 ms; (b) Full offset, T = 50 ms

Copyright © 2000 IEEE. All rights reserved.
Copyright The Institute of Electrical and Electronics Engineers, Inc.
Provided by IHS under license with IEEE
No reproduction or networking permitted without license from IHS
Not for Resale

5.10.2.2 DC offset in the voltage

The line relay voltage may contain a dc component if the primary circuit is nonhomogenous (i.e., if the source and line impedances have different X/R ratios). Examples of applications where this effect might be present include a resistance-grounded system supplying overhead lines, or a source comprised of overhead lines supplying a cable circuit. This dc offset may have some effect on the accuracy of reach of distance relays, and should be discussed with the relay manufacturer in cases where significant dc offset in the voltage is a possibility.

5.10.2.3 High-frequency transients

These types of transients accompany the energization or short circuit of circuits containing shunt capacitance, such as transmission lines, cables, and shunt capacitor banks. These transients are usually in the kilohertz region and can be removed easily by filtering to ensure that their influence on relaying circuits is nullified. In the case of long EHV and UHV lines, however, the frequency of the transients may approach a few multiples of the natural frequency and be more difficult to filter out. The filtering may cause a delay in protection operation, which can be significant when very fast detection is required (as is often the case on EHV transmission circuits). Protection systems designed for very high speed usually incorporate special designs to minimize the effect of filter delays (Ohura et al. [B18]; Sidhu [B46]).

5.10.2.4 Low-frequency transients

Transients with a frequency lower than the fundamental system frequency may result from the effects of series capacitors (see 5.7) and shunt reactors. Transients with the same order of magnitude as fundamental frequency may also occur in systems with high-voltage cables. Low-frequency transients may require special filtering on line protection systems (Ohura et al. [B18]; Sidhu [B46]).

Generator rotor angle oscillations also cause low-frequency transients that may affect line protection systems. Geomagnetically induced currents (GIC) are extremely low-frequency transients that may also affect line protection systems and cause saturation of CTs (IEEE PSRC Report [B24]).

5.10.2.5 Asymmetrical breaker pole closing

Asymmetrical closing of circuit breakers may be a result of unavoidable differences in operating time, or as a deliberate effort to minimize switching transients. The period of asymmetry is itself a transient unbalance with fundamental frequency. If the asymmetry exists for an appreciable portion of the protection system operating time, the series unbalance may appear as an unbalanced short circuit (Barnes and McConnell [B36]). This is of particular concern when the asymmetry happens on a breaker that is closing the second terminal of a transmission line to pick up load, since the unbalance current may be sufficient to pickup sensitive ground overcurrent relays. Line protection systems must be designed to accommodate the maximum expected unbalances.

5.10.2.6 Transformer inrush

Inrush to transformers tapped onto transmission lines results in transient currents with a primarily fundamental frequency. These transients are usually lower in magnitude than the contribution to a fault on the LV terminals of the transformer. Therefore, if the line protection system is able to remain secure for such faults, the transients will not normally result in undesirable operation of the line protection system. If the transformer inrush current contains a significant amount of negative or zero-sequence current, this may cause undesired operation of sensitive overcurrent relays intended to detect high-resistance ground faults. Such ground overcurrent relays may have to be desensitized or restrained by second harmonic components to override inrush. Inrush to delta connected transformer windings will not contain significant levels of zero-sequence current.

Copyright © 2000 IEEE. All rights reserved.

Copyright The Institute of Electrical and Electronics Engineers, Inc.
Provided by IHS under license with IEEE
No reproduction or networking permitted without license from IHS
Not for Resale

5.10.3 Coupled transients

Like all other protection systems subject to coupled transients, line protection systems must be designed and installed to operate correctly in the presence of such transients. IEEE Std C37.90.1-1989 describes tests that ensure a consistent degree of immunity to such transients for protection systems. Transient coupling mechanisms, effects, and mitigation are discussed in more detail in Elmore [B21].

5.10.4 Instrument transformer transients

Conventional line protection systems primarily use coupling capacitor VTs [capacitance coupled voltage transformer (CCVT) or CVT], and wire wound voltage and CTs. Applications of nonconventional instrument transformers require special consideration, which is not included in this guide.

Wire-wound VTs do not usually produce transients that affect line protection systems. However, the secondary circuit of a CCVT contains inductive and capacitive components that, when subjected to a sudden change in the primary voltage, will introduce a dc offset component into the secondary voltage, as well as an off-frequency ac component. The result of these anomalies can cause the relay to lose directional integrity, overreach, or respond slower than expected. The relay design may be such as to reject the undesirable transients, or the manufacturer may be able to provide application instructions to alleviate these effects by the choice of suitable settings. The transient performance of the CCVT is affected by, among other things, the capacitance of the coupling capacitor. Usually, the higher the capacitance, the better the performance. For a more complete discussion of CCVT transient response see Hou and Roberts [B22], IEEE PSRC Report [B40], and IEEE PSRC Report [B66].

CT transient saturation results in less than ideal reproduction of the primary current. Such transient saturation is caused by very-high-magnitude fault currents or very-low-frequency currents (such as transient dc offset). Depending on the relay design, CT saturation may result in undesirable tripping of differential protection systems, underreach of overcurrent or distance relays in line protection systems, or failure to operate, in extreme cases. CTs must be properly sized to produce sufficiently accurate secondary current, for the required length of time, in order for line protection to operate or restrain as required. CT transient performance is discussed in more detail in IEEE PSRC Report [B67].

5.10.5 Secondary transients

Transients originating in the secondary equipment affect line protection systems to the same extent as most other protection systems. High-magnitude, high-frequency transients can be generated by the interruption of an inductive current (such as the coil of an auxiliary relay). Such transients can cause incorrect operation of protection systems, or even damage them. IEEE Std C37.90.1-1989 describes tests that ensure a consistent degree of immunity of protection systems to such transients.

Copyright © 2000 IEEE. All rights reserved.
Copyright The Institute of Electrical and Electronics Engineers, Inc.
Provided by IHS under license with IEEE
No reproduction or networking permitted without license from IHS
Not for Resale

Annex A

(informative)

Bibliography

A.1 Automatic reclosing

[B1] IEEE PSRC Report, "Automatic Reclosing of Transmission Lines," *IEEE Transactions on Power Apparatus and Systems*, Vol. 103, no. 2, pp. 234–245, February 1984.

A.2 Directional relays

[B2] Blackburn, J. L., "Ground Relay Polarization," *AIEE Transactions Part III: Power Apparatus and Systems*, December 1952.

[B3] Griffin, C. H., "Principles of Ground Relaying for High Voltage and Extra High Voltage Transmission Lines," *IEEE Transactions on Power Apparatus and Systems*, Vol. PAS-102, no. 2, pp. 420–432, February 1983.

[B4] McLaren, P. G., Swift, G. W., Zhang, Z., Dirks, E., Jayasinghe, R. P., and Fernando, I., "A New Directional Element for Numerical Distance Relays," *IEEE Transactions on Power Delivery*, Vol. 10, no. 2, pp. 666–75, 1995.

[B5] Strang, W. M., "Polarizing Sources for Directional Relaying," Sixteenth Annual Western Protective Relay Conference, Texas A&M University, College Station, TX, October 1989.

[B6] Zimmerman, K., and Mooney, J. B., "Comparing Directional Element Performance Using Field Data," Eighth Annual Conference for Fault and Disturbance Analysis, Texas A&M University, College Station, TX, April 1993.

A.3 Distance relays

[B7] Alexander, G. E., and Andrichak, J. G., "Distance Relay Fundamentals," Twenty-third Annual Western Protective Relay Conference, October 1996.

[B8] Alexander, G. E., and Andrichak, J. G., "Ground Distance Relaying: Problems and Principles," Eighteenth Annual Western Protective Relay Conference, October 1991.

[B9] Cavero, L. P., "Adaptive Distance Relay Characteristics," Twenty-first Annual Western Protective Relay Conference, October 1994.

[B10] Cook, V., *Analysis of Distance Protection*. Letchworth: Research Studies Press, and New York: John Wiley and Sons, Inc., 1985.

[B11] Dierks, A., and McElray, J., "Analyzing Polarization of Impedance Relays," Fiftieth Annual Georgia Tech Protective Relay Conference, May 1996.

Copyright © 2000 IEEE. All rights reserved.

Copyright The Institute of Electrical and Electronics Engineers, Inc.
Provided by IHS under license with IEEE
No reproduction or networking permitted without license from IHS
Not for Resale

[B12] Elmore, W., Calero, F., and Yang, L., "Evolution of Distance Relaying Principles," Forty-eighth Annual Texas A&M Protective Relay Conference, April 1995.

[B13] Giuliante, A. T., McConnell, J. E., and Turner, S. D., "Considerations for the Design and Application of Ground Distance Relays," Forty-eighth Annual Texas A&M Protective Relay Conference, April 1995.

[B14] Kudo, H., Sasaki, H., Seo, K., Takahashi, M., Yoshida, K. and Maeda, T., "Implementation of a Digital Distance Relay Using an Interpolated Integral Solution of a Differential Equation," *IEEE Transactions on Power Delivery*, Vol. 3, no. 4, pp. 1475–1484, October 1988.

[B15] Marttila, R. J., "Directional Characteristics of Distance Relay mho Elements: Part I—A New Method of Analysis," *IEEE Transactions on Power Apparatus and Systems*, Vol. PAS-100, no. 1, pp. 96–102, January 1981.

[B16] Marttila, R. J., "Directional Characteristics of Distance Relay mho Elements: Part II—Results," *IEEE Transactions on Power Apparatus and Systems*, Vol. PAS-100, no. 1, pp. 103–113, January 1981.

[B17] Marttila, R. J., "Effect of Transmission Line Loading on the Performance Characteristics of Polyphase Distance Relay Elements," *IEEE Transactions On Power Delivery*, Vol. 3, no. 4, pp. 1466–1474, October 1988.

[B18] Ohura, T., et al., "Digital Distance Relay with Improved Characteristics Against Distorted Transient Wave Forms," *IEEE Transactions on Power Delivery*, Vol. 4, no. 4, pp. 2025–2031, October 1989.

[B19] Schweitzer, E. O., III., and Roberts, J., "Distance Relay Element Design," Nineteenth Annual Western Protective Relay Conference, October 1992.

A.4 General

[B20] Blackburn, J. L., *Protective Relaying: Principles and Applications*. New York: Marcel Dekker, Inc., 1987.

[B21] Elmore, W. A., Ed. *Protective Relaying Theory and Applications*. New York, Basel, Hong Kong: Marcel Dekker, Inc., 1994.

[B22] Hou, D., and Roberts, J., "Capacitive Voltage Transformers Transient Overreach Concerns and Solutions," Twenty-second Annual Western Protective Relay Conference, October 1995.

[B23] IEEE Std C37.99-1990 (Reaff 1994), IEEE Guide for the Protection of Shunt Capacitor Banks.

[B24] IEEE PSRC Report, "The Effects of Solar Magnetic Disturbances on Protective Relaying," *IEEE Special Publication 90TH0357-PWR*, July 1990.

[B25] IEEE PSRC Report, "Protective Relaying Considerations for Transmission Lines with High Voltage ac Cables," *IEEE Transactions on Power Delivery*, Vol. 12, no. 1, pp. 83–96, January 1997.

[B26] Mason, C. R., *The Art and Science of Protective Relaying*. New York: John Wiley and Sons, Inc., 1956.

[B27] *Protective Relays Application Guide*. Stafford, UK: GEC Alsthom, St. Leonards Works, 1987.

[B28] Tziouvaras, D. A., and Hawbaker, W. D., "Novel Applications of a Digital Relay with Multiple Setting Groups," Seventeenth Annual Western Protective Relay Conference, October 1990.

Copyright © 2000 IEEE. All rights reserved.
Copyright The Institute of Electrical and Electronics Engineers, Inc.
Provided by IHS under license with IEEE
No reproduction or networking permitted without license from IHS
Not for Resale

A.5 Multiterminal lines

[B29] Alexander, G. E., and Andrichak, J. G., "Application of Phase and Ground Distance Relays to Three Terminal Lines," Forty-ninth Annual Texas A&M Protective Relay Conference, April 1996.

[B30] IEEE PSRC Report, "Protection Aspects of Multiterminal Lines," *IEEE Special Publication 79TH0056-2-PWR*, 1979.

A.6 Out-of-step

[B31] Elmore, W. A., "The Fundamentals of Out-of-Step Relaying," Thirty-fourth Annual Conference for Protective Relay Engineers, Texas A&M University, College Station, TX, April 1981.

A.7 Phase comparison relays

[B32] Dzieduszko, J. W., "Combined Sequence Phase Comparison Relaying," Twenty-third Annual Western Protective Relay Conference, October 1996.

[B33] Lefrancois, M. J., "Mica 500 kV Protection—A Segregated Phase Comparison System with Special Features for High Tower Footing Resistance," Fifth Annual Western Protective Relay Conference, October, 1978.

A.8 Relaying schemes

[B34] Alexander, G. E., Andrichak, J. G., and Rowe, S. D., "Evaluating Line Relaying Schemes in Terms of Speed, Security, and Dependability," Twenty-first Annual Western Protective Relay Conference, October, 1994.

[B35] Angell, D., Arjona, D., and Beaudreau, D., "Present EHV Line Protection Choices—One Utility's Perspective," Twenty-first Annual Western Protective Relay Conference, October 1994.

[B36] Barnes, H. C., and McConnell, A. J., "Some Utility Ground-Relay Problems," *AIEE Transactions*, Vol. 74, pp. 417–428, June 1955.

[B37] Benmouyal, G., and Chano, S., "Characterization of Phase and Amplitude Comparators in UHS Directional Relays," IEEE Summer Meeting, Denver, CO., 1997.

[B38] Bladow, J., and Montoya, A., "Experience with Parallel EHV Phase Shifting Transformers," *IEEE Transactions on Power Delivery*, Vol. 6, no. 3, pp 1096–1100, July 1991.

[B39] Chamia, M., and Liberman, S., "Ultra High Speed Relay for EHV/UHV Transmission Lines—Development, Design and Application," *IEEE Transactions on Power Apparatus and Systems*, Vol. PAS-97, no. 6, pp. 2104-2116, November/December 1978.

[B40] IEEE PSRC Report, "EHV Protection Problems," *IEEE Transactions on Power Apparatus and Systems*, Vol. 100, no. 5, pp. 2399–2406, May 1981.

[B41] IEEE PSRC Report, "Static VAR Compensator Protection," *IEEE Transactions on Power Delivery*, Vol. 10, no. 3, pp. 1224–1233, July 1995.

Copyright © 2000 IEEE. All rights reserved.

Copyright The Institute of Electrical and Electronics Engineers, Inc.
Provided by IHS under license with IEEE
No reproduction or networking permitted without license from IHS
Not for Resale

[B42] Johns, T., Martin, M. A., Barker, A., Walker, E.P., and Crossley, P. A., "A New Approach to EHV Direction Comparison Protection Using Digital Signal Processing Techniques," *IEEE Transactions on Power Systems*, Vol. PWRD-1, no. 2, April 1986.

[B43] Kumm, J. J., and Schweitzer, E. O., "Statistical Comparison and Evaluation of Pilot Protection Schemes," Twenty-third Annual Western Protective Relay Conference, October 1996.

[B44] Mansour, M. M., and Swift, G. W., "A Multi-processor Based Traveling Wave Relay—Theory and Realization," *IEEE Transactions on Power Delivery*, Vol. PWRD-1, pp. 272-279, 1986.

[B45] Neher, J. H., and McConnell, A. J., "An Improved A-C Pilot-Wire Relay," *AIEE Transactions*, pp. 12–17 and pp. 638–643, 1941.

[B46] Sidhu, T. S., "A Microprocessor-Based Measuring Unit for High-Speed Distance Protection," *Canadian Journal of Electrical and Computer Engineering*, Vol. 18, no. 3, pp. 117–126, 1993.

[B47] Soudi, F., Tapia, P., Taylor, E. A., and Tziouvaras, D. A., "Protection of Utility/Cogeneration Interconnections," Twentieth Annual Western Protective Relay Conference, October 1993.

[B48] Taylor, E. R., Jr., Whyte, I. A., Brennen, M. B., and Bonk, J. J., "Static VAR Generator Application and Protection Considerations," Thirty-fourth Annual Texas A&M Relay Conference, April 1981.

A.9 Series-compensated lines

[B49] Alexander, G. E., Andrichak, J. G., Rowe, S. D., and Wilkinson, S. B., "Series Compensated Line Protection—A Practical Evaluation," Fifteenth Annual Western Protective Relay Conference, October 1988.

[B50] Courts, A. L., Hinyorani, N. G., and Stemler, G. E., "A New Series Capacitor Protection Scheme Using Nonlinear Resistors," *IEEE Transactions on Power Apparatus and Systems*, Vol. 97, no. 4, pp. 1042–1052, July/August 1978.

[B51] Elmore, W. A., and Andersson, F., "Overview of Series Compensated Line Protection Philosophies," Seventeenth Annual Western Protective Relay Conference, October 1990.

[B52] Jancke, G., Fahlen, N., and Nerf, O., "Series Capacitors in Power Systems," *IEEE Transactions on Power Apparatus and Systems*, Vol. 94, no. 3, pp. 1138–1149, January/June 1971.

[B53] Marttila, R. J., "Performance of Distance Relay mho Elements on MOV-Protected Series Compensated Transmission Lines," *IEEE Transactions on Power Delivery*, Vol. 7, no. 3, pp. 1167–1178, July 1992.

[B54] Mooney, J. B., Hou, D., Henville, C. F., and Plumtre, F. P., "Computer-Based Relay Models Simplify Relay Application Studies," Twentieth Annual Western Protective Relay Conference, October 1993.

A.10 Short lines

[B55] Alexander, G. E., Andrichak, J. G., and Tyska, W. Z., "Relaying Short Lines," Eighteenth Annual Western Protective Relay Conference, October 1991.

[B56] Korejwo, E., Synal, B., and Trojal, J., "Short HV Transmission Line Protection Problems," IEEE Second International Conference on Developments in Power System Protection, 1980.

--`,,`,,,,-`-`,,`,,`,`,,`---
Copyright © 2000 IEEE. All rights reserved.
Copyright The Institute of Electrical and Electronics Engineers, Inc.
Provided by IHS under license with IEEE
No reproduction or networking permitted without license from IHS
Not for Resale

A.11 Shunt capacitors

[B57] Drakos, et al., "Back to Back Switching of Large 230 kV, Grounded Y Capacitor Banks, Field Tests—Analysis of Results and Application Guidelines," *Proceedings, CEA, Engineering and Operating Conference*, March 1983.

[B58] McCauley, M., Pelfrey, D. L., Roettger, W. C., and Wood, C. E., "The Impact of Shunt Capacitor Installations on Power Circuit Breaker Application," *IEEE Transactions on Power Apparatus and Systems*, Vol. 99, no. 6, pp. 2210–2222, November/December 1980.

A.12 Shunt reactors

[B59] Engelhardt, K., "EHV Shunt Reactor Protection—Application and Experience," Tenth Annual Western Protective Relay Conference, October 1983.

[B60] IEEE PSRC Report, "Shunt Reactor Protection Practices," *IEEE Transactions on Power Apparatus and Systems*, Vol. 103, no. 8, pp 1970–1976, August 1984.

A.13 Single-phase tripping

[B61] IEEE PSRC Report, "Single-Phase Tripping and Auto Reclosing of Transmission Lines," *IEEE Transactions on Power Delivery*, Vol. 7, no. 1, pp. 182–192, January 1992.

[B62] Shperling, B. R., and Fakheri, A., "Single-Phase Switching Parameters for Untransposed EHV Transmission Lines," *IEEE Transactions on Power Apparatus and Systems*, Vol. 98, no. 2, pp. 643–649, April 1979.

A.14 Transients

[B63] Dommel, H. W., and Michels, J. M., "High Speed Relaying Using Traveling Wave Transient Analysis," IEEE PES Winter Meeting, A78214-9, New York, January/February 1978.

[B64] Engler, F., Lanz, O. E., Haggli, M., and Bacchini, G., "Transient Signals and Their Processing to Ultra High Speed Directional Relay for EHV/UHV Transmission Line Protection," *IEEE Transactions on Power Apparatus and Systems*, Vol. PAS-104, pp. 1463–73, 1985.

[B65] Henville, C. F., and Jodice, J. A., "Discover Relay Design and Application Problems Using Pseudo-transient Tests," *IEEE Transactions on Power Delivery*, Vol. 6, no. 4, pp. 1444–1452, October 1991.

[B66] IEEE PSRC Report, "Transient Response of Coupling Capacitor Voltage Transformers—IEEE Committee Report," *IEEE Transactions on Power Apparatus and Systems*, Vol. 100, no. 12, pp. 4811– 4814, December 1981.

[B67] IEEE PSRC Report, "Transient Response of Current Transformers," *IEEE Transactions on Power Apparatus and Systems*, Vol. 96, no. 6, November/December 1977.

[B68] Ohura, T., et al., "Digital Distance Relay with Improved Characteristics Against Distorted Transient Wave Forms," *IEEE Transactions on Power Delivery*, Vol. 4, no. 4, pp. 2025–2031, October 1989.

Copyright © 2000 IEEE. All rights reserved.

Copyright The Institute of Electrical and Electronics Engineers, Inc.
Provided by IHS under license with IEEE
No reproduction or networking permitted without license from IHS
Not for Resale

INDEX

A

adaptive relay, 3.1.3.1, 3.1.3.2, 4.8.4
apparent impedance, 3.1.3.3, 4.2.2, 4.3.3, 4.5, 4.7, 4.7.1, 5.1.3, 5.1.3.1, 5.3.1.2.2, 5.3.1.3, 5.5.1, 5.5.3.1, 5.6.1, 5.6.1.3
arc resistance, 3.1.3.4, 4.1.1, 4.3.1, 5.6.1.5, 5.9.5
audio tones, 4.1, 5.2.1
automatic reclosing, 3.4, 4.8.1, 5.1.3.2

B

backfeed, 4.7.7
backup protection, 3.2.3, 3.2.8, 3.3, 4.1.1, 5.1.2, 5.1.3.2, 5.3.7, 5.5.3.1
backup zone, 3.1.3.5, 3.2
blinders, 3.5.6, 5.3.1.2.2
breaker bypass, 4.11.5
breaker failure, 3.1.3.7, 3.3, 4.4, 5.3.7, 5.3.7.3
breaker-and-a-half, 4.11.2
bypass, 4.8.3, 4.8.5, 4.11.5, 5.7

C

cable circuits, 4.2.1, 5.9.6
cable systems, 4.2.1
charging current, 5.2.1, 5.3.6
choice of communications, 3.2.4
circuit switcher, 3.1.3.8, 4.7.4, 4.7.5, 4.8.4
common mode failure, 3.2.8
communications, 3.2, 3.2.2, 3.2.4, 3.2.7, 5.1.3.2, 5.2.1, 5.2.2, 5.2.4.1, 5.2.4.5, 5.3.6, 5.5.3.7, 5.5.3.8
coordinating timer, 5.2.4.5
coordination, Clause 1, 3.1.3.9, 3.1.3.28, 3.2, 4.1.1, 4.1.2, 4.5, 4.7.2, 5.1.1, 5.1.2, 5.1.3.1, 5.2.4, 5.2.4.5, 5.5.3.1
criticality, 3.2.2
criticality of the line, 3.2.2
cross polarization, 3.1.3.10, 5.6.1.2, 5.6.5.2
current differential, 3.1.3.11, 3.5.6, 4.1, 4.1.1, 5.2.1, 5.3.1.3, 5.4.4, 5.5.3.8, 5.7, 5.9.6
current inversion, 5.7.1
current outfeed, 3.1.3.3, 3.5.7, 5.5.1, 5.5.3.5
current reversal, 5.1.2, 5.2.3.3, 5.2.5.1, 5.3.1.2.2, 5.3.2, 5.4.4, 5.7.1

D

definitions, 3.1
dependability, 3.2, 3.2.9, 4.8.3, 5.1.3.1, 5.2.4.3, 5.3.5, 5.5.3.6
dependable, 5.1.3.2, 5.2.1, 5.2.3.1, 5.2.4.5
differential, 3.1.3.11, 3.5.6, 4.1.1, 4.1.2, 4.8.5, 4.11.5, 5.2.1, 5.2.3.3, 5.3.1.3, 5.4.4, 5.5.3.8, 5.7, 5.9.6, 5.10.4
direct underreaching transfer trip (DUTT), 3.5.6, 5.2.4.2, 5.3.2
directional comparison, 3.5.6, 4.1.2, 4.1.3, 5.2, 5.2.4, 5.2.4.5, 5.2.4.6, 5.2.5.1, 5.3.1.3, 5.3.5, 5.4.4, 5.5.3.6
directional comparison blocking, 3.5.6, 4.1.2, 5.2.4.5, 5.3.1.3, 5.5.3.6

Copyright © 2000 IEEE. All rights reserved.
Copyright The Institute of Electrical and Electronics Engineers, Inc.
Provided by IHS under license with IEEE
No reproduction or networking permitted without license from IHS
Not for Resale

directional comparison hybrid scheme, 5.2.4.7
directional ground overcurrent, 5.1.2, 5.2.4, 5.2.4.1, 5.2.4.3, 5.2.4.7, 5.3.6, 5.4, 5.4.4
directional overcurrent relay, 3.5.3, 5.1.2
distance relay, Clause 1, 3.1.3.3, 3.1.3.12, 3.1.3.27, 3.1.3.37, 3.5.5, 4.1.1, 4.2.1, 4.4, 4.7, 4.7.7, 4.8.3, 4.10.3, 5.1.3, 5.1.3.1, 5.2.4, 5.3.1.1, 5.3.1.2.2, 5.3.2, 5.5.1, 5.6, 5.7, 5.7.2, 5.7.3, 5.9, 5.10.2.2, 5.10.4
distribution line, 3.1.1
double breaker, 4.11.3
double circuit transmission lines, 4.2.2, 4.8.1
dual-phase comparison, 5.2.3.2
dual polarization, 3.1.3.13, 5.4.1

E

echo, 4.5, 5.2.4.3, 5.2.4.7, 5.3.5, 5.5.3.6
echo keying, 5.3.5
economic evaluations of protection, 3.2
extra high voltage (EHV), 4.1.3, 5.10.2.3

F

fault detector, 3.5.6, 5.2.3.1, 5.3.4, 5.3.7.3, 5.5.3.7, 5.6.5.1
fault impedance, 3.1.3.14, 4.1.1, 5.1.3.1, 5.6.1.3, 5.7.1
fault resistance, 3.5.5, 4.10.2, 5.4.3, 5.6.1, 5.6.1.3, 5.6.1.4, 5.6.1.5, 5.7.1
fiber optic, 3.2, 5.2.1, 5.2.3, 5.2.4.5
four-legged reactor, 4.8.1

G

ground directional overcurrent, 5.2.4.5
ground distance relay, 3.1.3.16, 3.5.5, 4.7.7, 4.10.3, 5.5.4, 5.6.2, 5.6.3
ground overcurrent relay, 3.5.2, 4.6, 4.7.7, 4.10.3, 5.1.2, 5.2.4, 5.4, 5.4.4, 5.6.1.5, 5.10.2.5
ground return, 4.3.1, 4.10, 4.10.1
ground wire, 4.10.1

H

high-impedance ground, 3.2, 4.10, 4.10.1
high-impedance ground faults, 3.2
high-resistance ground, 4.3.1, 5.10.2.6
high-speed clearing, 3.2
high-speed tripping, 4.1.3, 5.2, 5.2.4.5, 5.2.5.1, 5.3.3, 5.5.3.5, 5.5.3.6
hybrid scheme, 3.1.3.17, 5.2.4.7

I

impedance relay, 3.1.3.18, 4.2.2, 5.1.3, 5.2.5.1
infeed, 3.1.3.3, 3.1.3.19, 3.1.3.33, 4.5, 4.7, 4.7.6, 4.7.7, 4.10.2, 5.1.3.1, 5.2.1, 5.3.5, 5.3.7.1, 5.5.2, 5.5.3.1, 5.5.3.4–5.5.3.6, 5.5.4, 5.6.1.3
instantaneous, 3.5.1, 4.7.5, 4.7.6, 5.1.1, 5.1.2, 5.1.3.1, 5.2.4, 5.2.4.1, 5.3.3, 5.3.6, 5.4.4, 5.6.5.1, 5.7.2, 5.10.2.1
instantaneous overcurrent, 4.7.5, 5.1.1, 5.1.2, 5.2.4, 5.6.5.1

--`,,`,,,-`-`,,`,,`,`,,`---
Copyright © 2000 IEEE. All rights reserved.

Copyright The Institute of Electrical and Electronics Engineers, Inc.
Provided by IHS under license with IEEE
No reproduction or networking permitted without license from IHS Not for Resale

L

lenticular, 3.1.3.20, 5.1.3
line configuration, 1, 3.1.1, 5.5
line length, 3.2.2, 3.2.3, 3.2.7, 4.1, 4.2.2, 4.5, 5.1.1, 5.5, 5.6.1.3, 5.9.5
line terminal, 3.1.1, 3.1.3.40, 3.2.4, 3.5.6, 4.3, 4.3.2, 4.5, 4.7.6, 4.8.1, 4.8.2, 5.1.1, 5.1.2, 5.2.3, 5.2.3.1, 5.2.3.2, 5.3.5, 5.5.4, 5.7.1
load current, 3.5.1, 3.5.2, 3.5.4, 3.5.6, 3.5.7, 4.6, 4.8.3, 5.1.1, 5.1.2, 5.2.3.3, 5.3.4, 5.3.6, 5.3.7.3, 5.6.1.4, 5.6.4, 5.6.5.1, 5.7
local backup, 3.2, 3.2.3, 3.2.8, 3.3, 4.7.4, 5.3.7.2, 5.5.3.1
long line, 3.2.3, 3.5.6, 4.1, 4.1.1, 4.1.3, 4.3.1, 4.3.2, 5.1.1, 5.3.1.2.2, 5.7
long transmission line, 5.1.1

M

maximum torque angle, 5.9.6
memory action, 5.3.3, 5.6.5.2, 5.9.6
memory voltage, 5.7.2
metal oxide varistors (MOV), 5.7
mho elements, 5.6.2
mho relay, 5.1.3
microwave, 4.1, 5.2.1, 5.2.3, 5.2.3.1, 5.2.4.5
multiterminal, Clause 1, 3.1.3.22, 4.5, 4.7.6, 5.1.3, 5.5, 5.5.3, 5.5.3.1, 5.5.3.6
multiterminal line, Clause 1, 4.5, 4.7.6, 5.1.3, 5.5, 5.5.3, 5.5.3.1, 5.5.3.6
mutual coupling, 4.9, 5.1.2, 5.4.4
mutually coupled lines, 1, 5.2.4, 5.4.4

N

negative-sequence, 4.7.7, 5.1.2, 5.4.1, 5.4.3, 5.4.4, 5.6.1.4, 5.6.3, 5.7.2
negative-sequence mutual, 5.4.4
negative-sequence polarization, 5.4.3, 5.4.4
negative-sequence voltage, 5.4.3, 5.6.3
neutral shift, 5.4.1
nondirectional overcurrent, 5.1.1, 5.1.2, 5.3.3

O

offset, 5.1.3, 5.2.3.3, 5.6.1.4, 5.10.2.1, 5.10.2.2, 5.10.4
offset mho, 5.1.3
one-line diagram, 3.1.5
out-of-step, 5.3.1, 5.3.1.1, 5.3.1.2, 5.3.1.2.1–5.3.1.2.3
OS trip, 5.3.1.2.1
overlapping zones of protection, 3.1.2
overreach, 3.5.5, 5.1.3.1, 5.2.4, 5.3.7.1, 5.4.4, 5.9.4, 5.9.6, 5.10.2.1, 5.10.4

P

parallel circuit, 5.3.2, 5.4.4
parallel line, 4.2.2, 5.3.2
past practices, 3.2.5, 3.2.6
permissive overreaching transfer trip (POTT), 3.5.6, 4.1.2, 4.1.3, 5.2.4.3, 5.2.4.7, 5.3.2

Copyright © 2000 IEEE. All rights reserved.
Copyright The Institute of Electrical and Electronics Engineers, Inc.
Provided by IHS under license with IEEE
No reproduction or networking permitted without license from IHS
Not for Resale

permissive underreaching transfer trip (PUTT), 4.1.2, 4.1.3, 5.2.4.2, 5.3.2
phase angle, 3.1.3.2.6, 3.1.3.11, 4.3.2, 5.1.3, 5.2, 5.2.3, 5.3.1.1, 5.4.2, 5.5.3.7
phase comparison, 3.1.3.2.6, 3.1.3.31, 3.5.6, 4.1.1–4.1.3, 5.2.3, 5.2.3.1–5.2.3.3, 5.3.1.3, 5.4.4, 5.5.3.7, 5.7, 5.9.6
phase directional relay, 5.1.2
phase distance relays, 3.5.4, 5.3.1.3, 5.6.3
phase overcurrent relays, 3.5.1, 3.5.2, 5.1.1
phase shifting transformers, 4.8, 4.8.5
pilot protection, 3.1.3.26, 3.2.3.5.6, 4.1.1, 4.5, 5.2.4, 5.2.5.1, 5.3.6, 5.4.4, 5.5.1, 5.5.3.1, 5.5.3.6, 5.9.4
pilot schemes, 5.3.6, 5.4.4, 5.5.1, 5.5.3.1, 5.5.3.6, 5.9.4
pilot-wire, 4.1, 5.2.2, 5.9.6
positive sequence, 4.1, 4.3.3, 4.7.7, 5.6.1.4, 5.6.2, 5.6.3
power line carrier (PLC), 4.1, 4.1.2, 4.1.3, 5.2.3, 5.2.3.2
power swing, Clause 1, 5.6.1
primary zone, 3.1.3.5, 3.1.3.29, 3.2, 5.3.7.1

Q

quadrilateral, 3.1.3.30, 5.1.3, 5.6.1.1, 5.9.6
quadrilateral relay characteristic, 5.1.3

R

radial line, 4.3.1
reach, 3.5.4, 4.1.3, 5.1.3, 5.1.3.1, 5.1.3.2, 5.2.4.1, 5.2.4.2, 5.2.4.4, 5.2.4.5, 5.3.1.2.2, 5.3.1.3, 5.3.6, 5.5.3.1, 5.5.3.4, 5.5.3.6, 5.6.1, 5.6.1.3, 5.6.2, 5.7.2, 5.7.3, 5.9.1, 5.9.4, 5.9.6, 5.10.2.2
reactance relay, 5.1.3
reactor, 4.8.1, 4.8.4
reclosing, 1, 3.4, 4.4, 4.7.4, 4.8.1, 4.10.3, 5.1.3.2, 5.3.1.1, 5.3.1.2.1, 5.3.1.2.2, 5.3.3
redundancy, 3.2, 3.2.2, 3.2.8, 3.3, 4.3.3, 4.11.3, 5.3.7.2, 5.5.3.1
relaying communications, 3.2
relaying reliability, 3.2
relaying speed, 3.2
reliability, 1, 3.2, 3.2.9, 5.9.4
remote backup, 1, 3.2, 3.2.8, 3.3, 4.1.1, 5.1.3.1, 5.2.1, 5.3.7.1, 5.3.7.2, 5.5.3.1
residual current, 5.1.1, 5.2.2
ring bus, 4.11.4
ring down current, 4.8.1
ring down frequency, 4.8.1
R-X diagram, 3.1.5

S

secondary arc, 4.8.1
security, 3.2, 3.2.9, 3.5.1, 4.8.3, 5.2.1, 5.2.4.1, 5.2.4.5, 5.3.3, 5.3.5, 5.4.3, 5.5.3.7, 5.6.1
segregated phase comparison, 3.1.3.31, 5.2.3, 5.2.3.3
selectivity, 1, 3.2, 3.2.3, 4.1.2, 4.1.3, 5.3.3, 5.3.7.2
self-checking, 3.1.3.32, 3.2
sensitivity, 3.2, 3.3, 3.5, 3.5.6, 4.1.2, 4.3.1, 5.1.3, 5.2.1, 5.2.4, 5.2.4.5, 5.4.1, 5.4.3, 5.6.1.1, 5.7, 5.9.6
sensitivity of protection, 3.2
sequential operation, 5.3.1.2.1, 5.3.1.2.2, 5.5.1, 5.5.3.1

--`,,`,,,,-`-`,,`,,`,`,,`---
Copyright © 2000 IEEE. All rights reserved.

Copyright The Institute of Electrical and Electronics Engineers, Inc.
Provided by IHS under license with IEEE
No reproduction or networking permitted without license from IHS
Not for Resale

sequential tripping, 3.1.3.33, 4.3.3, 4.5, 5.1.3.1, 5.3.2, 5.3.5
series capacitors, Clause 1, 3.1.1, 3.2.3, 4.1.3, 4.8, 4.8.3, 5.2.5.1, 5.7, 5.10.2.4
series reactors, 4.8
short line, 3.2.3, 4.1, 4.1.1, 4.2.1, 4.3.2, 5.1.3.1, 5.2.2, 5.2.5.1, 5.9
shunt capacitance, 4.8.1, 4.8.2, 5.10.2.3
shunt capacitor,4.8, 4.8.2, 5.10.2.3
shunt reactor, 2, 3.1.1, 3.2.3, 4.8, 4.8.1, 5.10.2.4
simplicity, 3.2, 3.2.9
single breaker, 4.11.1, 4.11.5
single-phase trip, 1, 4.8.1, 4.10.3, 5.2.3.3, 5.2.5.1, 5.8
single-point failure, 3.2.8
single-phase comparison, 5.2.3.1, 5.2.3.2
source impedance, 3.1.3.36, 4.1, 4.5, 5.1.1, 5.2.5.1, 5.4.1, 5.4.3, 5.6.1.4, 5.7.1, 5.7.2, 5.9.6
source-to-line impedance ratio (SIR), 3.1.3.36, 3.2, 4.1, 4.1.1–4.1.3, 5.9.1, 5.9.2, 5.9.5, 5.9.6
speed, Clause 1, 3.1.3.28, 3.2, 3.2.9, 3.4, 4.1.2, 4.1.3, 4.8.1, 4.8.3, 5.1.3.2, 5.2.4, 5.2.4.3–5.2.4.5, 5.2.5.1, 5.3.1.3, 5.3.5, 5.3.6, 5.5.3.5, 5.5.3.6, 5.9.1, 5.9.2, 5.10.2.3
stability, 3.2.2, 3.4, 4.1.3, 4.5, 4.8.3, 4.8.6, 5.3.1.2.1, 5.7, 5.8, 5.9.2
stable swings, 5.3.1.1
static var compensator (SVC), 4.8, 4.8.6
station ground mat, 3.1.1, 4.6
step distance, 3.1.3.37, 3.2.2, 4.1.2, 5.1.3.1, 5.2.4
surge suppression, 4.8.2
swing, 1, 3.1.3.8, 3.5.1, 5.2.1, 5.3.1.1–5.3.1.3, 5.6.1
system voltage unbalances, 3.2

T

tap line, 4.7.1, 5.1.3
tapped substation, 4.7.6
tapped transformer, 4.7.6
three terminal, 3.5.7, 4.7, 5.2.4, 5.5.2, 5.5.3.7, 5.6.2
three-line ac diagrams, 3.1.5
time-current diagram, 3.1.5
time-overcurrent, 5.1.2
tower footing resistance, 4.10.2, 5.6.1.5
transformer, 3.1.2, 3.1.3.15, 3.5.1, 4.4, 4.7.4–4.7.7, 4.8.5, 4.11.1–4.11.4, 4.11.6, 5.4.1, 5.4.2, 5.5.4, 5.6.3, 5.6.5.1, 5.10.2.6, 5.10.4
transient blocking, 5.3.2, 5.4.4
transients, 3.2, 5.7.3, 5.9.4, 5.10, 5.10.1–5.10.5
transmission line, 1, 3.1.1, 3.1.3.11, 3.1.3.22, 3.1.3.34, 3.1.3.42, 3.2.2, 3.2.3, 3.3, 3.4, 4.1, 4.2.2, 4.3, 4.4, 4.7, 4.7.4–4.7.7, 4.8.1, 4.8.3, 4.10, 4.11, 4.11.3–4.11.5, 5.1.1, 5.1.2, 5.1.3, 5.1.3.1, 5.1.3.2, 5.2.4.5, 5.3.5, 5.3.6, 5.4.1, 5.4.3, 5.4.4, 5.5.4. 5.6.1.5, 5.6.3, 5.7, 5.7.3, 5.8, 5.10.2.3, 5.10.2.5, 5.10.2.6
two terminal, 3.1.3.22, 3.5.6, 4.3.2, 5.1.3, 5.2.3, 5.2.4, 5.2.5.1, 5.5, 5.5.3.2, 5.5.3.7

U

ultra high voltage (UHV), 4.1.3, 5.10.2.3
unblocking, 3.1.3.41, 3.5.6, 4.1.2, 5.2.3, 5.2.4.6, 5.2.4.7, 5.3.2, 5.3.5
underreach, 3.5.5, 4.1.2, 4.2.2, 4.7.7, 5.2.4, 5.5.2, 5.6.3, 5.9.4, 5.9.6, 5.10.4
unstable swings, 5.3.1.1, 5.3.1.3

Copyright © 2000 IEEE. All rights reserved.
Copyright The Institute of Electrical and Electronics Engineers, Inc.
Provided by IHS under license with IEEE
No reproduction or networking permitted without license from IHS
Not for Resale

V

voltage reversal, 5.2.5.1, 5.4.4, 5.7.2
voltage supervision, 5.6.5.1

W

weak infeed, 4.5, 5.3.5, 5.5.3.4, 5.5.3.6
weak source, 3.5.7, 4.5, 4.10.2, 5.2.3.3, 5.3.5, 5.9.1
weak system, 4.5

Z

zero-sequence, 3.1.3.15, 3.1.3.35, 4.3.1, 4.7.7, 4.10.1, 5.1.1, 5.1.2, 5.2.3, 5.2.4, 5.3.5, 5.4.2–5.4.4, 5.5.4, 5.6.1.4, 5.6.2, 5.6.3, 5.6.5.1, 5.7.2, 5.10.2.6
zero-sequence current, 3.1.3.15, 3.1.3.35, 4.3.1, 4.7.7, 5.2.3, 5.3.5, 5.4.3, 5.4.4, 5.5.4, 5.6.1.4, 5.6.2, 5.6.3, 5.6.5.1, 5.10.2.6
zero-sequence current polarization, 5.1.2
zero-sequence polarization, 5.4.4
zero-sequence voltage, 4.7.7, 5.4.1, 5.4.3, 5.4.4, 5.5.4, 5.6.5.1, 5.7.2
zone, 3.5.6, 4.1.2, 5.1.3.1, 5.1.3.2, 5.2.4, 5.2.4.2, 5.2.5.1, 5.3.6, 5.3.7.1, 5.5.3.1–5.5.3.3, 5.7.3, 5.9.2, 5.9.4, 5.9.6
Zone 1 extension, 5.1.3.2
zone acceleration, 5.2.4.4
zone of protection, Clause 1, 3.1.2, 3.1.3.5, 3.1.5, 3.2, 4.8.1, 5.1.2, 5.1.3, 5.3.7.1

Copyright © 2000 IEEE. All rights reserved.

Copyright The Institute of Electrical and Electronics Engineers, Inc.
Provided by IHS under license with IEEE
No reproduction or networking permitted without license from IHS
Not for Resale