An American National Standard

IEEE Guide for the Protection of Shunt Reactors

Sponsor
IEEE Power Systems Relaying Committee
of the
IEEE Power Engineering Society

Approved October 20, 1988
IEEE Standards Board

Approved May 10, 1989
American National Standards Institute

Abstract: ANSI/IEEE C37.109-1988 *IEEE Guide for the Protection of Shunt Reactors*, discusses the protection of shunt reactors used typically to compensate for capacitive shunt reactance of transmission lines. The more common circuit arrangements and protective relaying schemes presently in use are discussed and illustrated.

Copyright © 1989
The Institute of Electrical and Electronics Engineers, Inc.
345 East 47th Street, New York, NY 10017-2394, USA
No part of this publication may be reproduced in any form, in an electronic retrieval system or otherwise, without the prior written permission of the publisher.

--`,,`,,`-`-`,,`,,`,`,,`---

Copyright The Institute of Electrical and Electronics Engineers, Inc.
Provided by IHS under license with IEEE
No reproduction or networking permitted without license from IHS
Not for Resale

IEEE Standards documents are developed within the Technical Committees of the IEEE Societies and the Standards Coordinating Committees of the IEEE Standards Board. Members of the committees serve voluntarily and without compensation. They are not necessarily members of the Institute. The standards developed within IEEE represent a consensus of the broad expertise on the subject within the Institute as well as those activities outside of IEEE which have expressed an interest in participating in the development of the standard.

Use of an IEEE Standard is wholly voluntary. The existence of an IEEE Standard does not imply that there are no other ways to produce, test, measure, purchase, market, or provide other goods and services related to the scope of the IEEE Standard. Furthermore, the viewpoint expressed at the time a standard is approved and issued is subject to change brought about through developments in the state of the art and comments received from users of the standard. Every IEEE Standard is subjected to review at least once every five years for revision or reaffirmation. When a document is more than five years old, and has not been reaffirmed, it is reasonable to conclude that its contents, although still of some value, do not wholly reflect the present state of the art. Users are cautioned to check to determine that they have the latest edition of any IEEE Standard.

Comments for revision of IEEE Standards are welcome from any interested party, regardless of membership affiliation with IEEE. Suggestions for changes in documents should be in the form of a proposed change of text, together with appropriate supporting comments.

Interpretations: Occasionally questions may arise regarding the meaning of portions of standards as they relate to specific applications. When the need for interpretations is brought to the attention of IEEE, the Institute will initiate action to prepare appropriate responses. Since IEEE Standards represent a consensus of all concerned interests, it is important to ensure that any interpretation has also received the concurrence of a balance of interests. For this reason IEEE and the members of its technical committees are not able to provide an instant response to interpretation requests except in those cases where the matter has previously received formal consideration.

Comments on standards and requests for interpretations should be addressed to:

Secretary, IEEE Standards Board
P.O. Box 1331
445 Hoes Lane
Piscataway, NJ 08855-1331
USA

IEEE Standards documents are adopted by the Institute of Electrical and Electronics Engineers without regard to whether their adoption may involve patents on articles, materials, or processes. Such adoption does not assume any liability to any patent owner, nor does it assume any obligation whatever to parties adopting the standards documents.

Copyright The Institute of Electrical and Electronics Engineers, Inc.
Provided by IHS under license with IEEE
No reproduction or networking permitted without license from IHS
Not for Resale

Foreword

(This Foreword is not a part of ANSI/IEEE C37.109-1988, IEEE Standard Guide for the Protection of Shunt Reactors.)

This Guide was prepared by the Shunt Reactor Protection Working Group of the Substation Protection Subcommittee of the IEEE Power Systems Relaying Committee. At the time this Guide was approved, the working group membership was as follows:

L. L. Dvorak, *Chair*

D. C. Dawson	H. Disante	J. D. Huddleston, III
R. W. Dempsey	C. M. Gadsden	L. J. Schulze

At the time this Guide was approved, the Substation Protection Subcommittee membership was as follows:

J. E. Stephens, *Chair*
R. W. Dempsey, *Vice Chair*

J. K. Akamine	D. C. Dawson	G. C. Parr
H. N. Banjeree	L. L. Dvorak	W. E. Reid
E. A. Baumgartner	S. E. Grier	L. J. Schulze
J. J. Bonk	R. W. Haas	J. W. Walton
S. P. Conrad	R. E. Hart	T. E. Wiedman
C. J. Cool	J. D. Huddleston, III	

The following persons were on the balloting committee that approved this document for submission to the IEEE Standards Board:

C. H. Griffin, *Chair*
J. R. Boyle, *Vice Chair*
J. A. Zulaski, *Secretary*

J. K. Akamine	J. T. Emery	W. C. Kotheimer
G. Y. R. Allen	E. J. Emmerling	S. R. Lambert
J. C. Appleyard	J. Estergalyos	L. E. Landoll
R. F. Arehart	W. E. Ferro	J. R. Latham
C. W. Barnett	R. J. Fernandez	J. R. Linders
E. A. Baumgartner	C. M. Gadsden	F. N. Meissner
R. W. Beckwith	A. T. Giuliante	J. Miller
J. J. Bonk	S. E. Grier	R. J. Moran
J. R. Boyle	C. H. Griffin	C. J. Mozina
B. Bozoki	R. W. Haas	J. J. Murphy
J. A. Bright	R. E. Hart	T. J. Murray
H. J. Calhoun	R. W. Hirtler	K. K. Mustaphi
J. W. Chadwick, Jr.	J. W. Hohn	G. R. Nail
D. M. Clark	F. Huber, Jr.	S. L. Nilsson
S. P. Conrad	J. D. Huddleston, III	R. W. Ohnesorge
J. Criss	J. W. Ingleson	G. C. Parr
D. C. Dawson	R. H. Jones	A. G. Phadke
R. W. Dempsey	E. W. Kalkstein	A. C. Pierce
H. Disante	T. L. Kaschalk	A. Politis
P. R. Drum	W. N. Kennedy	J. M. Postforoosh
L. L. Dvorak	S. S. Kershaw	L. J. Powell
W. A. Elmore	K. J. Khunkhun	G. D. Rockefeller

Copyright The Institute of Electrical and Electronics Engineers, Inc.
Provided by IHS under license with IEEE
No reproduction or networking permitted without license from IHS
Not for Resale

M. S. Sachdev
E. T. Sage
D. E. Sanford
L. Scharf
H. S. Smith
J. E. Stephens
A. Sweetana
F. Y. Tajaddodi
R. P. Taylor
J. R. Turley
E. A. Udren
D. R. Volzka
C. L. Wagner
J. W. Walton
T. E. Wiedman
S. E. Zocholl
A. Zulaski

When the IEEE Standards Board approved this standard on October 20, 1988, it had the following membership:

Donald C. Fleckenstein, *Chair*
Marco Migliaro, *Vice Chair*
Andrew G. Salem, *Secretary*

Arthur A. Blaisdell
Fletcher J. Buckley
James M. Daly
Stephen R. Dillon
Eugene P. Fogarty
Jay Forster*
Thomas L. Hannan
Kenneth D. Hendrix
Theodore W. Hissey, Jr.
John W. Horch
Jack M. Kinn
Frank D. Kirschner
Frank C. Kitzantides
Joseph L. Koepfinger*
Irving Kolodny
Edward Lohse
John E. May, Jr.
Lawrence V. McCall
L. Bruce McClung
Donald T. Michael*
Richard E. Mosher
L. John Rankine
Gary S. Robinson
Frank L. Rose
Helen M. Wood
Karl H. Zaininger
Donald W. Zipse

*Member Emeritus

Copyright The Institute of Electrical and Electronics Engineers, Inc.
Provided by IHS under license with IEEE
No reproduction or networking permitted without license from IHS
Not for Resale

CLAUSE PAGE

1. Introduction 1

2. References 1

3. Use of Reactors 2

4. Typical Reactor Protection 2

5. Reactor Construction and Characteristics 2

5.1 Dry Type 3
5.2 Oil-Immersed 3

6. Dry-Type Reactors—Application and Protection 4

6.1 Reactor Connections 4
6.2 Failure Modes and Types of Faults 4
6.3 System Considerations 6
6.4 Relaying Practices 6

7. Oil-Immersed Reactors—Application and Protection 10

7.1 Reactor Connections 10
7.2 Failure Modes and Type of Faults Encountered 11
7.3 System Considerations 11
7.4 Relaying Practices 12

8. Bibliography 17

Copyright The Institute of Electrical and Electronics Engineers, Inc.
Provided by IHS under license with IEEE
No reproduction or networking permitted without license from IHS Not for Resale

An American National Standard

IEEE Guide for the Protection of Shunt Reactors

1. Introduction

This guide covers protection of shunt reactors used typically to compensate for capacitive shunt reactance of transmission lines. A survey of shunt reactor protection, conducted in 1979 by the Shunt Reactor Protection Working Group of the IEEE Power System Relaying Committee, was used as a reference to determine the more common circuit arrangements and protective relaying schemes presently in use.

Other arrangements or special applications of reactors such as harmonic filter banks, static var compensation (SVC), high voltage direct current (HVDC), or current-limiting reactors are not specifically addressed; however, the protective methods described in this guide are usually applicable to this equipment.

2. References

This guide shall be used in conjunction with the following publications:

[1] ANSI/IEEE C57.21-1981, Requirements, Terminology, and Test Code for Shunt Reactors Rated Over 500 kVA.[1]

[2] ANSI/IEEE C62.2-1987, IEEE Guide for Application of Gapped Silicone Carbide Valve-Type Surge Arresters for Alternating-Current Systems.

[3] ANSI/IEEE C62.11-1987, IEEE Standard for Metal-Oxide Surge Arresters for AC Power Circuits.

[4] ASEA Electric *Recommendations for Protective Relays*, Pamphlet ZF27-004E Reg. 4771. ASEA Brown Boveri, Protective Relay Division, Allentown, PA, 1985.

[1]ANSI/IEEE publications are aviailable from the Institute of Electrical and Electronics Engineers, Service Center, 445 Hoes Lane, P.O. Box 1331, Piscataway, NJ 08855-1331, or the Sales Department, American National Standards Institute, 1430 Broadway, New York, NY 10018.

Copyright The Institute of Electrical and Electronics Engineers, Inc.
Provided by IHS under license with IEEE
No reproduction or networking permitted without license from IHS
Not for Resale

[5] EDWARDS, L., CHADWICK, J. W., JR., RIESCH, H. A. and SMITH, L. E., Single-Pole Switching on TVA's Paradise-Davidson 500-kV Line Design Concepts and Staged Fault Test Results, *IEEE Transactions on Power Apparatus and Systems*, Vol PAS-90, Nov./Dec. 1971, pp. 2436–2450.

[6] ENGELHARDT, K. H., EHV Line-Connected Shunt Reactor Protection Application and Experience, *International Conference on Large High-Voltage Electric Systems, C.I.G.R.E*, Paris, France, paper No. 34-09, 1984.

[7] KIMBARK, E. W., Suppression of Ground-Fault Arcs on Single-Pole Switched EHV Lines by Shunt Reactors, *IEEE Transactions on Power Apparatus and Systems*, Vol. 83/No. 3, Mar. 1964, pp 285–290.

[8] PICKETT, M.J., et al, Near Resonance Coupling on EHV Circuits, *IEEE Transactions on Power Apparatus and Systems*, Vol PAS-87, Aug. 1967, pp 322–325.

[9] Power System Relaying Committee Report. Shunt Reactor Protection Practices. *IEEE Transactions on Power Apparatus and Systems*, Vol PAS-103, Aug. 1984, pp. 1970–1976.

[10] S&C Electric Company, Chicago, IL. *RD-3221 Operating Description*, Aug. 1985.

[11] Trench Electric, Toronto Ontario, Canada. *Shunt Reactor Bulletin T100-35-02l*, May 1984.

3. Use of Reactors

Shunt reactors are used to provide inductive reactance to compensate for the effects of high charging current of long transmission lines and pipe-type cables. For light load conditions, this charging current can produce more leading reactive kVA than the system can absorb without risk of instability or excessively high voltages at the line terminals.

4. Typical Reactor Protection

Two basic shunt-reactor configurations are considered:

1) Dry-type, connected ungrounded wye which are connected to the impedance-grounded tertiary of a power transformer.
2) Oil-immersed, wye-connected, with a solidly grounded or impedance-grounded neutral, connected to the transmission system.

Major fault protection for dry-type reactors is achieved through over-current, differential, or negative-sequence relaying schemes, or by a combination of these relaying schemes. Protection for low-level turn-to-turn faults is provided by a voltage-unbalance relay scheme with compensation for inherent unbalance.

Major fault protection for oil-immersed reactors is achieved through over-current relaying, differential relaying, or a combination of both. Protection for low-level turn-to-turn faults is provided by impedance, thermal, gas-accumulator, or sudden-pressure relays, or by a combination of these relays.

5. Reactor Construction and Characteristics

The two general types of construction used for shunt reactors are dry-type and oil-immersed. The construction features of each type, along with variations in design, are discussed under the headings which follow.

 Copyright © 1988 IEEE All Rights Reserved

Copyright The Institute of Electrical and Electronics Engineers, Inc.
Provided by IHS under license with IEEE
No reproduction or networking permitted without license from IHS Not for Resale

5.1 Dry Type

Dry-type shunt reactors generally are limited to voltages through 34.5 kV and are usually applied on the tertiary of a transformer which is connected to the transmission line being compensated. The reactors are of the air-core (coreless) type, open to the atmosphere, suitable for indoor or outdoor application. Natural convection of ambient air is generally used for cooling the unit by arranging the windings so as to permit free circulation of air between layers and turns.

The layers and turns are supported mechanically by bracing members or supports made from materials such as ceramics, glass polyester, and concrete. The reactors are constructed as single-phase units and are mounted on base insulators or insulating pedestals which provide the insulation to ground and the support for the reactor.

Because the dry-type shunt reactor has no housing or shielding, a high-intensity external magnetic field is produced when the reactor is energized. Care is thus required in specifying the clearances and arrangement of the reactor units, mounting pad, station structure, and any metal enclosure around the reactor or in the proximity of the reactor. A closed metallic loop in the vicinity of the reactor produces losses, heating, and arcing at poor joints; therefore, it is important to avoid these loops and to maintain sufficient separation distances. Shielding may be required when it is not possible to arrange dry-type units in an equilateral-triangle configuration isolated from external magnetic influences. This shielding is required to limit the impedance deviation between phases. Deviation from impedance values for reactors will result in a deviation from the actual MVAR rating.

For the same range of applications, the primary advantages of dry-type air-core reactors, compared to oil-immersed types, are lower initial and operating costs, lower weight, lower losses, and the absence of insulating oil and its maintenance. The main disadvantages of dry-type reactors are limitations on voltage and kVA ratings and the high-intensity external magnetic field mentioned above. Because these reactors do not have an iron core, there is no magnetizing inrush current when the reactor is energized.

5.2 Oil-Immersed

The two design configurations of oil-immersed shunt reactors are coreless type and gapped iron-core type. Both designs are subject to low-frequency longtime constant currents during de-energizing, determined by the parallel combination of the reactor's inductance and line capacitance. However, the gapped iron-core design is subject to more severe energizing inrush than the coreless type.

Most coreless shunt reactor designs have a magnetic circuit (magnetic shield) which surrounds the coil to contain the flux within the reactor tank. The steel core-leg that normally provides a magnetic flux path through the coil of a power transformer is replaced (when constructing coreless reactors) by insulating support structures. This type of construction results in an inductor that is linear with respect to voltage.

The magnetic circuit of a gapped iron-core reactor is constructed in a manner very similar to that used for power transformers with the exception that small gaps are introduced in the iron core to improve the linearity of inductance of the reactor and to reduce residual or remanent flux when compared to a reactor without a gapped core.

Oil-immersed shunt reactors can be constructed as single-phase or three-phase units and are very similar in external appearance to that of conventional power transformers. They are designed for either self cooling or forced cooling.

Copyright © 1988 IEEE All Rights Reserved

Copyright The Institute of Electrical and Electronics Engineers, Inc.
Provided by IHS under license with IEEE
No reproduction or networking permitted without license from IHS Not for Resale

6. Dry-Type Reactors—Application and Protection

6.1 Reactor Connections

Dry-type reactor banks are generally connected to the tertiary of a transformer bank as shown in Fig 1. Each wye-connected, ungrounded reactor bank can be switched individually on the supply side of the reactor bank, as shown in Fig 1, or on the neutral side, as shown in Fig 2. A grounding transformer having a grounded wye-connected primary and a broken-delta connected secondary, with a grounding resistor, as shown in Fig 1, is normally used on the tertiary circuit to provide a limited amount of ground current. The grounding transformer and the grounding resistor are sized for a continuous zero-sequence current at least equal to the zero-sequence current flowing through the tertiary-circuit capacitance to ground under ground-fault conditions. In addition, the grounding transformer must be rated for continuous application of line-to-line voltage in order to withstand a continuous ground fault on the tertiary.

The grounding scheme for the tertiary is essentially a high-resistance method utilizing the broken-delta secondary of the grounding transformer to insert the resistance, as well as provide indication of a ground fault on the tertiary circuits. This method offers the following advantages:

1) The neutral is stabilized by the zero-sequence resistance.
2) The voltages to ground on the tertiary circuits due to switching are kept low.
3) Currents due to line-to-ground faults, the most prevalent type, are minimized; a few amperes are typical.
4) Excellent ground fault protection is afforded by the voltage relay across the resistor.
5) Any number of banks can be switched without sacrificing the foregoing advantages.

Other tertiary grounding arrangements are possible, however, the multiple advantages of this method have gained wide acceptance and application.

Surge arrester selection, coordination, and application for protection of shunt reactors is covered ANSI/IEEE C62.2-1989 [2],[2] and ANSI/IEEE C62.11-1987 [3].

6.2 Failure Modes and Types of Faults

The faults encountered in dry type reactor installations can be categorized as follows:

1) Phase-to-phase faults on the tertiary bus, resulting in a high-magnitude phase current.
2) Phase-to-ground faults on the tertiary bus, resulting in a low-magnitude ground current, dependent upon the size of the grounding transformer and resistor.
3) Turn-to-turn faults within the reactor bank, resulting in a very small change in phase current.

Phase-to-phase faults are not likely to occur in dry-type reactors, since they consist of single-phase units generally arranged with considerable separation between phases. However, instances have been reported where arcing from a faulted reactor contacted the tertiary bus to initiate a phase-to-phase fault.

Since dry-type reactors are mounted on insulators or supports which provide standard clearances to ground, direct winding-to-ground faults are not likely to occur without unusual circumstances, such as when an animal bridges the insulation to ground. The damage which occurs for a winding-to-ground fault depends on how much ground current is permitted by the grounding transformer.

[2]The number in brackets corresponds to those of the references listed in Section 2

--`,,`-`-`,,`,,`,`,,`---

Copyright © 1988 IEEE All Rights Reserved

Copyright The Institute of Electrical and Electronics Engineers, Inc.
Provided by IHS under license with IEEE
No reproduction or networking permitted without license from IHS Not for Resale

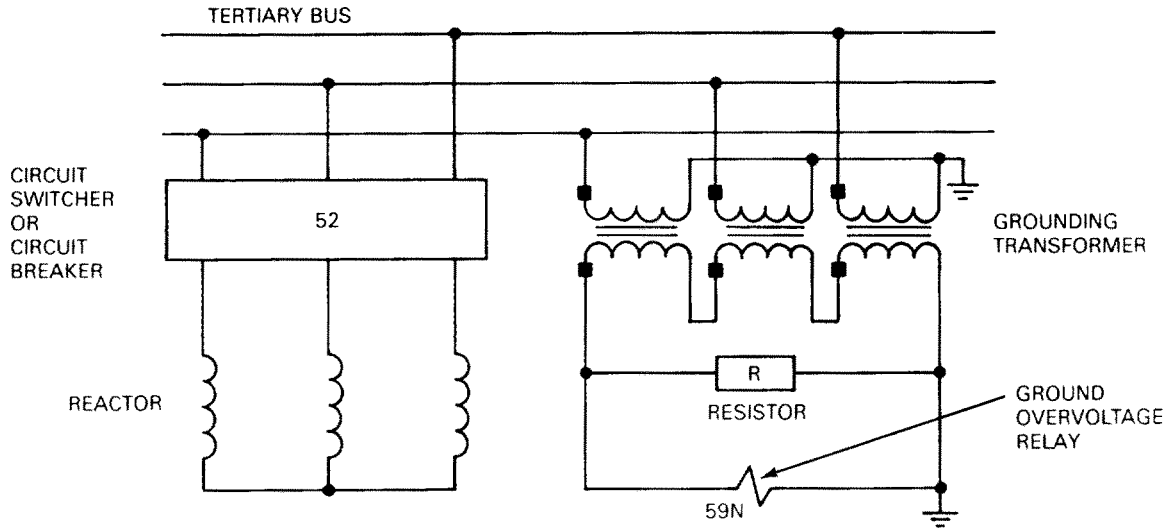

Figure 1—Typical Dry-Type Shunt Reactor Connection With Three-Pole Supply-Side Switching and With Grounding Transformer

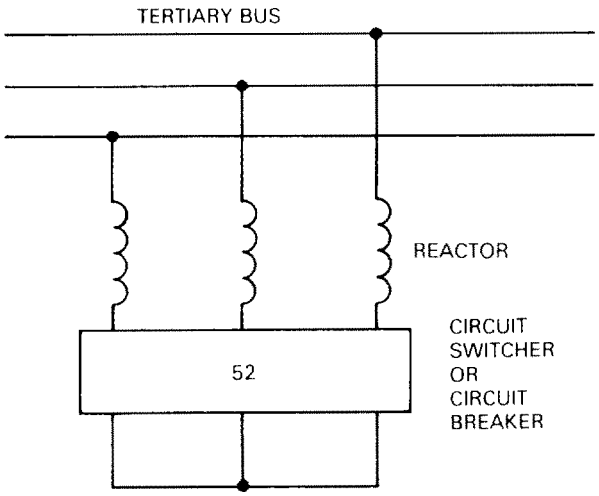

NOTE — Grounding transformer not shown.

Figure 2—Dry-Type Shunt Reactor Connection With Two-Pole or Three-Pole Neutral-Side Switching

Winding-insulation failures in dry-type reactors may begin as tracking due to insulation deterioration or as turn-to-turn faults, but once an arc is initiated, these failures, if not detected promptly, often involve the entire winding due to the arc's strong interaction with the magnetic field of the reactor. The result is a phase-to-neutral fault which increases the current in the unfaulted phases to a maximum of the square root of three times normal phase current. This increase in phase current, if not detected, will cause thermal damage of the unfaulted phases of the reactor bank.

Copyright © 1988 IEEE All Rights Reserved

Copyright The Institute of Electrical and Electronics Engineers, Inc.
Provided by IHS under license with IEEE
No reproduction or networking permitted without license from IHS
Not for Resale

6.3 System Considerations

The transmission system is generally not affected by a faulted dry-type reactor, since even a shorted phase leg of an ungrounded wye-connected reactor connected to a transformer delta tertiary will have only a minor effect on the magnitude of the phase current. Unless the fault was to evolve into a phase-to-phase fault on the tertiary bus, it is necessary only to isolate the faulted reactor by tripping the reactor switching device, leaving the rest of the transmission system intact. If the reactor bank is not equipped with a switching device with fault interrupting capability, the transformer bank must be tripped in the event of a reactor fault.

When a faulted dry-type reactor is isolated from the tertiary circuit, the voltage on the transmission line will increase. Studies of the system should be made to be sure that the loss of the reactor will not cause a significant overvoltage condition on the system.

6.4 Relaying Practices

6.4.1 Protection for Phase-to-Phase Faults

Relaying protection for phase-to-phase faults generally consists of overcurrent, differential, or negative-sequence current relaying schemes or a combination of these relaying schemes. The more common schemes are illustrated in Fig 3 [9].

6.4.2 Protection for Phase-to-Ground Faults

Ground fault protection is shown in Fig 1. The broken-delta output of the grounding transformer is monitored by an overvoltage relay equipped with a harmonic filter to reject any third harmonic voltage that may be present. It is common practice to alarm but not trip for this condition. This relay cannot differentiate between a reactor ground and a ground on other portions of the tertiary system.

6.4.3 Protection for Turn-to-Turn Faults

Turn-to-turn faults in dry-type reactors present a formidable challenge to the protection engineer. The current and voltage changes encountered during a turn-to-turn fault can be of the same order of magnitude as variations expected in normal service, and therefore, sensitive, reliable protection using the conventional relaying schemes described above is not possible.

The voltage-unbalance relaying scheme illustrated in Fig 4.A [10] has come into use recently. The voltage signal appearing between the neutral connection of the reactor bank and ground can be the result of:

1) Reactor-bank unbalance due to a faulted reactor.
2) Reactor-bank unbalance due to manufacturing tolerance.[3]
3) Tertiary bus-voltage unbalance with respect to ground.

The manufacturing tolerance produces a fixed error voltage that can be negated by an equal and opposite voltage generated by means of a phase-shifting network. System voltage unbalance may be variable; however, a given percent change in system unbalance affects both the reactor bank neutral-to-ground voltage and the grounding transformer broken-delta voltage to the same degree, and therefore these two signals can be used to cancel each other. The summing-amplifier signal output of Fig 4.A is thus representative of the degree of unbalance due only to the faulted reactor, and hence, this scheme can discriminate between a turn-to-turn fault and other sources of unbalance.

[3]per ANSI/IEEE C57.21-1981 [1] in the case of a three-phase shunt reactor or a bank made up of three single-phase reactors, the maximum deviation of impedance in any one phase shall be within 2% of the average impedance ohms of the three phases. For dry-type shunt reactors without magnetic-field shielding, this tolerance applies only when units are arranged in an equilateral-triangle configuration and isolated from any external magnetic influences.

Copyright © 1988 IEEE All Rights Reserved

Copyright The Institute of Electrical and Electronics Engineers, Inc.
Provided by IHS under license with IEEE
No reproduction or networking permitted without license from IHS Not for Resale

When the voltage unbalance relaying scheme is applied, consideration should be given to the effect of a tertiary bus fault to ground on the operation of the reactor protection relays. If the tertiary bus ground relay 59N is connected to trip the tertiary bus source, the reactors will be de-energized and the response of the reactor neutral voltage relays is immaterial. However, if the bus ground relay only provides an alarm, it will generally be considered desirable to keep the reactors in service during the ground fault and the following points about the voltage unbalance scheme should be reviewed.

1) Under ground-fault conditions, the neutral voltage signal and the grounding transformer broken delta signal will have high levels.
   These signals must cancel in the summing amplifier; therefore, the summing amplifier must be linear up to the maximum voltages obtained during a ground fault. Failure of these two signals to cancel would result in an erroneous output from the summing amplifier and possibly cause a false relay trip. An alternate scheme shown in Fig 4.B keeps the amplifier from seeing the large neutral and grounding transformer signals. The connection used provides a summation of the neutral and the grounding transformer output so that the amplifier is only presented with the differential signal during a reactor fault.
2) If the voltage used to supply the phase-shifting network is affected by a tertiary bus ground fault, then the compensation for reactor unbalance may be changed in magnitude or phase angle, possibly resulting in a false trip. This can be avoided by using a phase-to-phase, rather than phase-to-ground voltage as the source for the phase-shifting network, as illustrated in Fig 4.B.
   When dry-type reactors are constructed using multiple parallel circuits per coil, the voltage unbalance scheme may not have sufficient sensitivity to detect a single turn fault in one of the parallel windings. Some manufacturers [11], [4] of such reactors propose a split-phase protection system, similar to that used on hydrogenerators for turn-to-turn fault protection, as shown in Figs 5.A and 5.B. Although this appears to be a promising technique for reactor protection, it has not yet been widely used. Neutral switching is possible with the scheme shown in Fig 5.B while it is not with the scheme in Fig 5.A.

Copyright © 1988 IEEE All Rights Reserved

Copyright The Institute of Electrical and Electronics Engineers, Inc.
Provided by IHS under license with IEEE
No reproduction or networking permitted without license from IHS Not for Resale

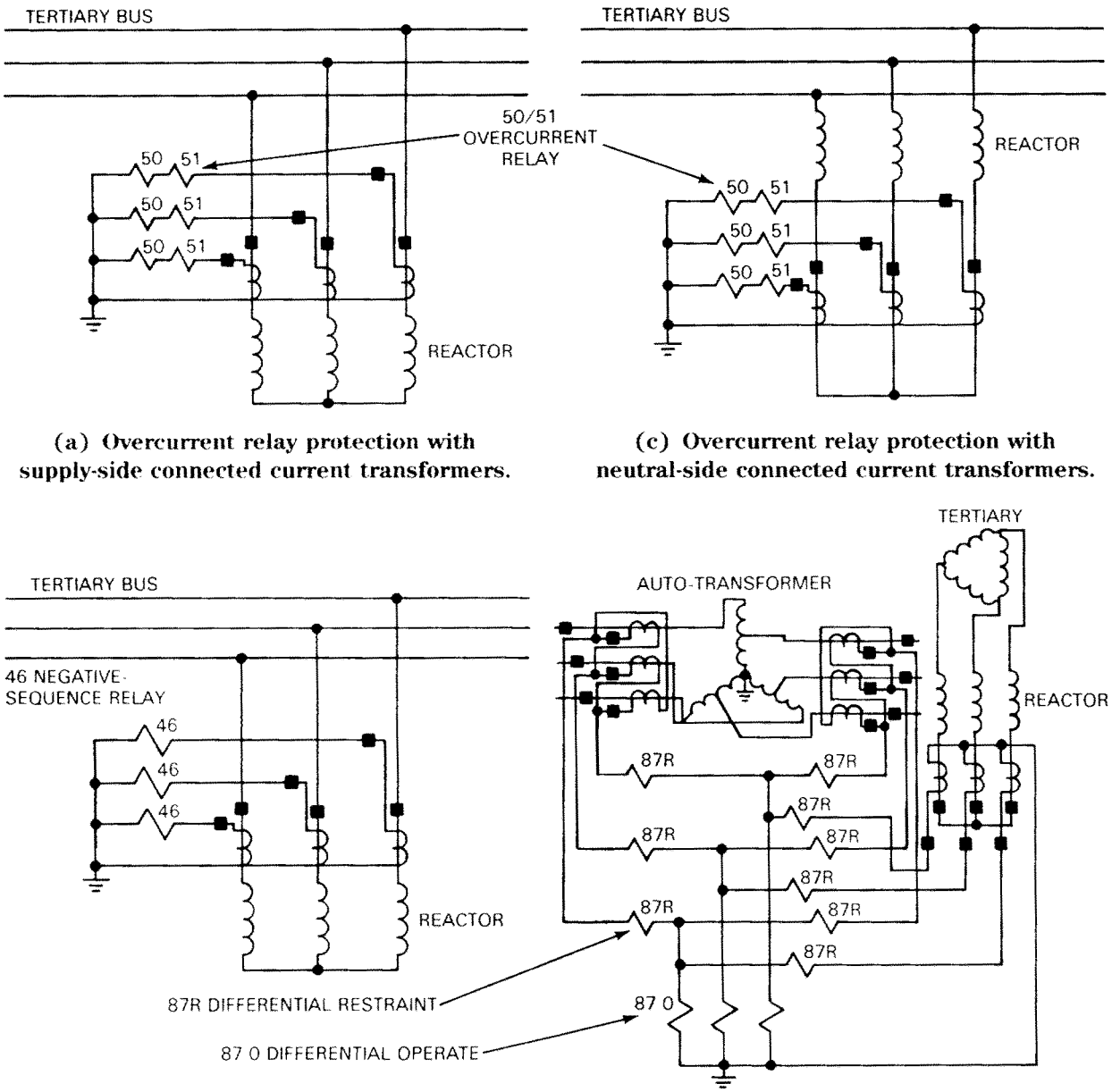

(a) Overcurrent relay protection with supply-side connected current transformers.

(c) Overcurrent relay protection with neutral-side connected current transformers.

(b) Negative-sequence relay protection.

(d) Differential relay protection for dry-type reactors. (Reactor is part of zone of auto-transformer tertiary.)

Figure 3—Common Protective Relaying Schemes for Dry-Type Reactors

Copyright © 1988 IEEE All Rights Reserved

Copyright The Institute of Electrical and Electronics Engineers, Inc.
Provided by IHS under license with IEEE
No reproduction or networking permitted without license from IHS
Not for Resale

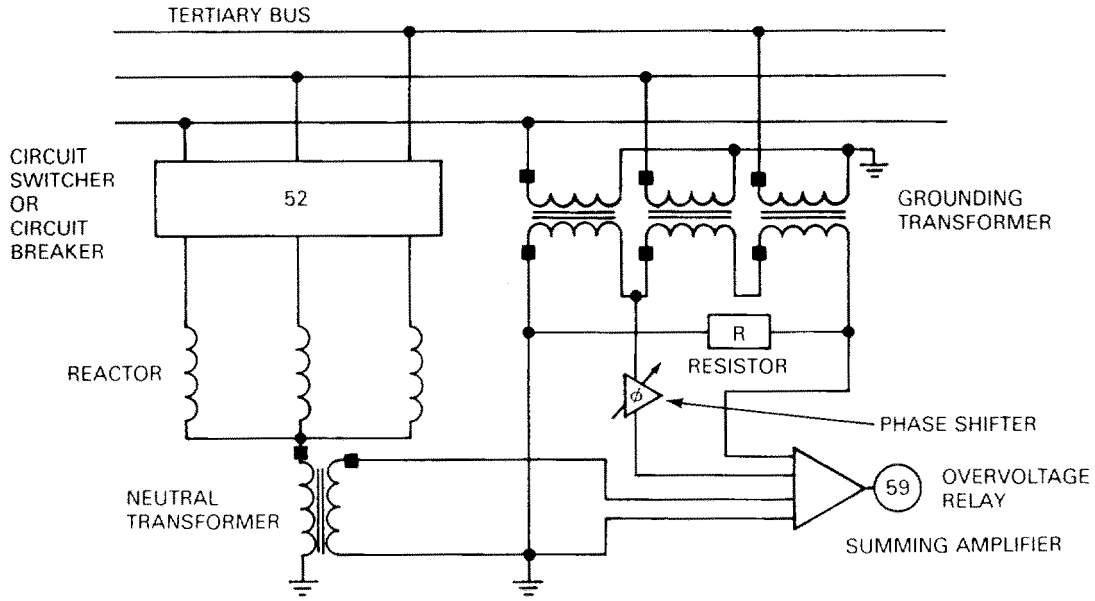

Figure 4.A—Voltage-Unbalance Relay Protection for Dry-Type Reactors

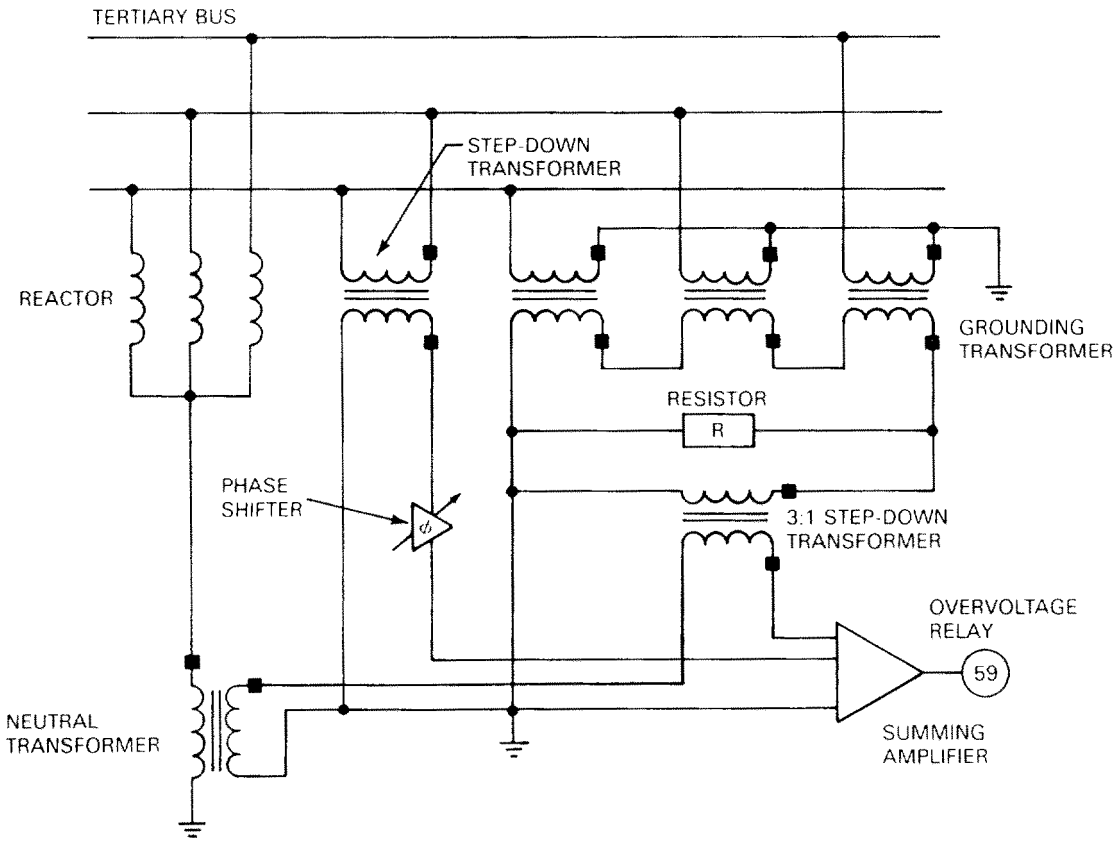

Figure 4.B—Voltage-Unbalance Relay Protection for Dry-Type Reactors (Alternate Method)

Copyright © 1988 IEEE All Rights Reserved

Copyright The Institute of Electrical and Electronics Engineers, Inc.
Provided by IHS under license with IEEE
No reproduction or networking permitted without license from IHS
Not for Resale

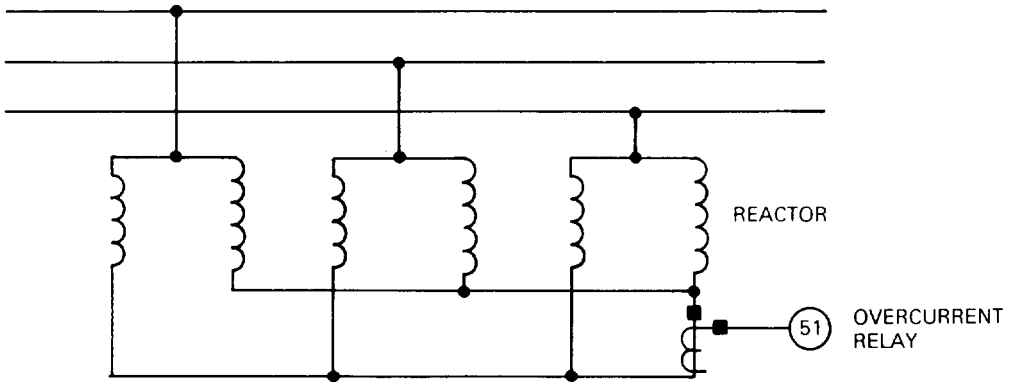

Figure 5.A—Split Phase Protection (Three-Phase Sensing)

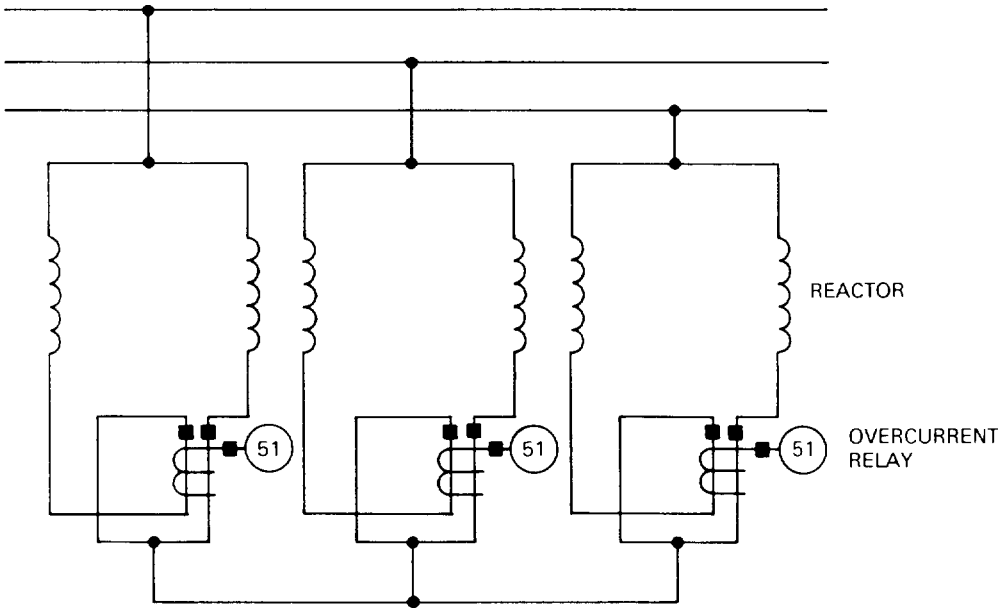

Figure 5.B—Split Phase Protection (Single-Phase Sensing)

7. Oil-Immersed Reactors—Application and Protection

7.1 Reactor Connections

Oil-immersed reactors are generally connected to one or both ends of a long transmission line, as shown in Fig 6, and are wye-connected with a solidly grounded neutral. These reactor banks may be switched or may be permanently connected to the line.

Another reactor-bank arrangement that has recently come into use for single-pole tripping and reclosing of circuit breakers is the four-reactor scheme [5]. In this application, a fourth reactor is connected between the reactor-bank neutral and ground to suppress the secondary arc current in a faulted and disconnected phase conductor during single-phase fault interruption.

Copyright © 1988 IEEE All Rights Reserved

Copyright The Institute of Electrical and Electronics Engineers, Inc.
Provided by IHS under license with IEEE
No reproduction or networking permitted without license from IHS Not for Resale

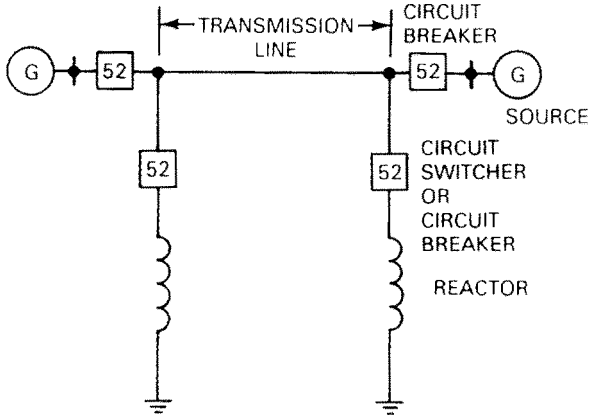

Figure 6—One-Line Diagram of Line-Connected, Switched Shunt Reactors

Oil-immersed reactors may also be connected to the substation bus, and as with line-connected reactors, are generally solidly grounded and may be either switched or permanently connected to the bus. Relaying protection for bus-connected reactors and for four-reactor configured banks is basically the same as that used for line-connected, solidly grounded, oil-immersed reactors [7].

7.2 Failure Modes and Type of Faults Encountered

The failures encountered with oil-immersed reactor installations can be categorized as follows:

1) Faults resulting in large changes in the magnitude of phase current, such as bushing failures, insulation failures, etc. Because of the proximity of the winding with the core and tank, winding-to-ground failures can occur. The magnitude of current resulting from this type of fault is dependent upon the location of the winding-to-ground fault with respect to the reactor bushing. The farther the fault is away from the bushing, the lower the fault current. Bushing failures within or external to the tank, as well as faults on the connection between the transmission line and the reactor bank, will result in large increases in the magnitude of phase current.
2) Turn-to-turn faults within the reactor winding, resulting in small changes in the magnitude of phase current. Low-level faults within an oil-immersed reactor will result in a change in the reactor impedance, increased operating temperature and internal pressure, and accumulation of gas. If not detected, the turn-to-turn fault will likely evolve into a major fault.
3) Miscellaneous failures such as low oil and loss of forced cooling.

7.3 System Considerations

7.3.1 Clearing of Faults

The typical relaying practice for line-connected reactors is to trip the local line breaker and transfer trip the remote line breaker. A dual channel is recommended for extra security. For a reactor fault in a direct-connected line reactor, both line breakers are usually locked out.

For a fault in a switched line reactor, where rapid reclosing is desired, both line breakers are tripped, the reactor-bank switching device is opened, and then the line breakers are automatically reclosed.

When a circuit switcher is utilized as the reactor bank switching device, a blocking or coordinated tripping scheme may be applied. In this scheme, the circuit switcher interrupts low-level reactor faults within its rating, and the terminal

Copyright © 1988 IEEE All Rights Reserved

Copyright The Institute of Electrical and Electronics Engineers, Inc.
Provided by IHS under license with IEEE
No reproduction or networking permitted without license from IHS Not for Resale

breaker operates only on higher level faults beyond the rating of the circuit switcher. Other users, with concern for reliability of trip blocking, may choose to operate the higher capacity terminal breaker directly for faults beyond the rating of the circuit switcher without blocking trip of the circuit switcher and depend on the faster circuit breaker to clear the fault. However, use of a full-rated circuit breaker for reactor switching would eliminate the need for a coordinated tripping scheme.

7.3.2 Resonance Phenomena

The distributed shunt capacitance of the transmission line can form a parallel-resonant circuit with the shunt reactor(s) having a natural frequency close to 60 Hz. This resonant circuit can be troublesome and should be taken into account by the system planner and the relay protection engineer.

When a de-energized transmission line with directly connected reactor(s) is physically close enough to another energized line for the two lines to be electrically coupled, it is possible for higher-than-rated system voltage to develop across the “de-energized” reactor. This problem can be prevented by isolating the reactor by means of a dedicated reactor-switching device at the same time as, or immediately following, the de-energizing of the line [8].

Another phenomenon of concern to the relay protection engineer occurs when a compensated transmission line is de-energized. The parallel-resonant circuit will produce a damped sinusoidal voltage at a frequency generally less than 60 Hz, which can last several seconds, with an initial voltage that can approach rated voltage. This substantial voltage, at a reduced frequency, can cause misoperation of impedance relays used to protect shunt reactors, unless the impedance relays are specifically designed for the application.

7.4 Relaying Practices

7.4.1 Protection for Large-Magnitude Faults

Relaying protection for faults producing large increases in the magnitude of phase current is generally a combination of overcurrent, differential, or distance relaying. The more common schemes are illustrated in Fig 7 [9].

One of the principal difficulties with shunt reactor protection is false relay operation during iron-core reactor energizing and de-energizing. During these periods, d.c. offset with long time-constants and low-frequency components of the reactor energization current cause the most problems. High-impedance differential relays are generally recommended over low-impedance relays for this reason [6]. Where low-impedance differential relays are used, it is generally recommended that the relay be sufficiently desensitized to prevent misoperation.

Differential schemes have been applied as primary protection for the detection of winding-to-core or winding-to-tank faults. Where a reactor differential relaying scheme is used, it is recommended that the current transformers on both sides of the reactor have similar excitation characteristics. Ground fault backup protection can be provided by a neutral overcurrent relay.

7.4.2 Protection for Turn-to-Turn Faults

It is generally agreed that phase overcurrent relay schemes are not sufficiently sensitive to provide adequate protection for turn-to-turn faults and differential relay schemes cannot detect such faults. Distance relays or ground overcurrent relays offer some improvement in protection, but the sudden-pressure relay or gas-accumulator relay or both generally provide the most sensitive means of detecting turn-to-turn faults within oil-immersed reactors.

Ground overcurrent relays provide some protection, but there should be time delay coordination provided for external faults and current transformer saturation.

Distance relays have been applied to detect shorted turns in iron-core shunt reactors. The use of distance relays for this type of protection is possible due to the significant reduction in the 60-Hz impedance of a shunt reactor under turn-to-

Copyright © 1988 IEEE All Rights Reserved

Copyright The Institute of Electrical and Electronics Engineers, Inc.
Provided by IHS under license with IEEE
No reproduction or networking permitted without license from IHS Not for Resale

turn fault conditions. The turn-to-turn fault sensitivity that can be achieved is limited by the apparent impedance seen by the relay during the inrush period when the reactor is energized. The relay reach must be set below the reduced impedance seen during this inrush period and should be selected so that the relay will not operate incorrectly on the natural frequency oscillation which occurs when a compensated transmission line is de-energized.

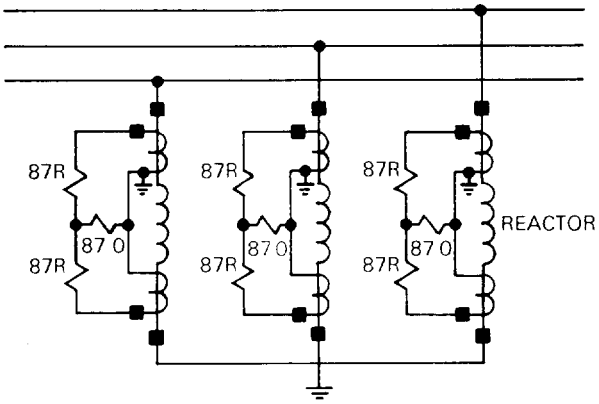

(a) Differential relay protection with restraint.

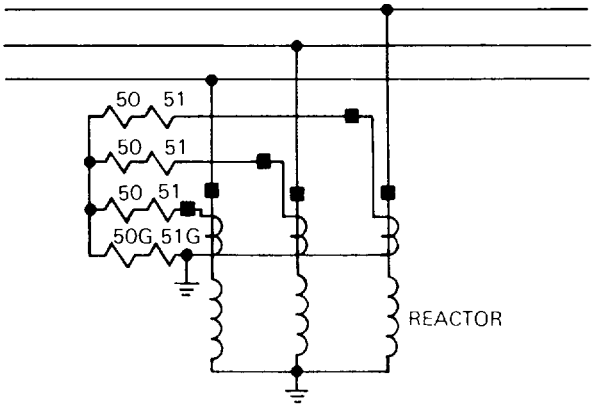

(c) Overcurrent relay protection.

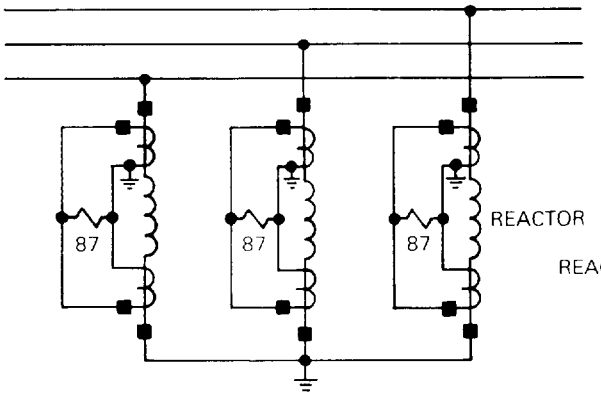

(b) Differential relay protection.

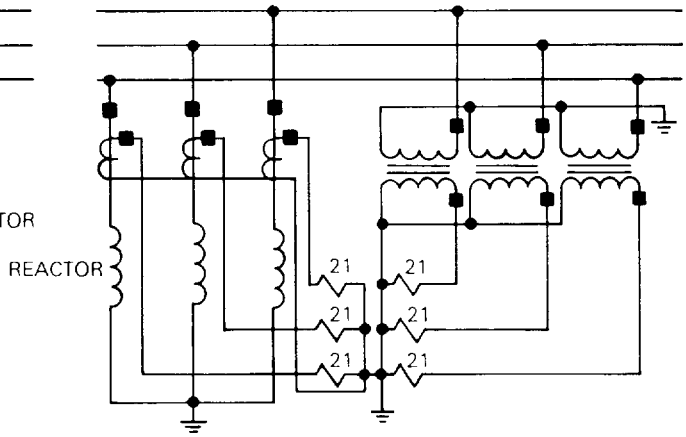

(d) Distance relay protection.

Figure 7—Common Protective Relaying Schemes for Oil-Immersed Reactors

Copyright © 1988 IEEE All Rights Reserved

Copyright The Institute of Electrical and Electronics Engineers, Inc.
Provided by IHS under license with IEEE
No reproduction or networking permitted without license from IHS
Not for Resale

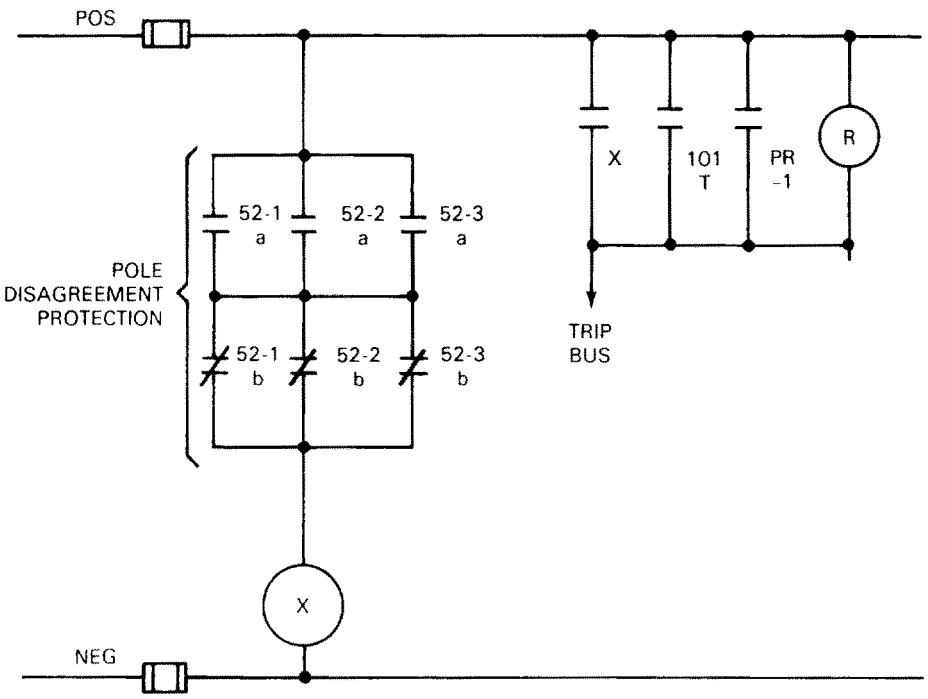

DEVICE DESIGNATIONS	
52-1	BREAKER PHASE A MECHANISM
52-2	BREAKER PHASE B MECHANISM
52-3	BREAKER PHASE C MECHANISM
52 a	BREAKER AUX. SWITCH (CLOSED WHEN BKR. IS CLOSED)
52 b	BREAKER AUX. SWITCH (OPEN WHEN BKR. IS CLOSED)
101T	MANUAL TRIPPING CONTROL
X	AUXILIARY RELAY
PR-1	PRIMARY PROTECTIVE RELAYING
R	RED LIGHT

Figure 8—Typical Auxiliary Contact Disagreement Circuit in Circuit Breaker Control Wiring

Copyright © 1988 IEEE All Rights Reserved

Copyright The Institute of Electrical and Electronics Engineers, Inc.
Provided by IHS under license with IEEE
No reproduction or networking permitted without license from IHS
Not for Resale

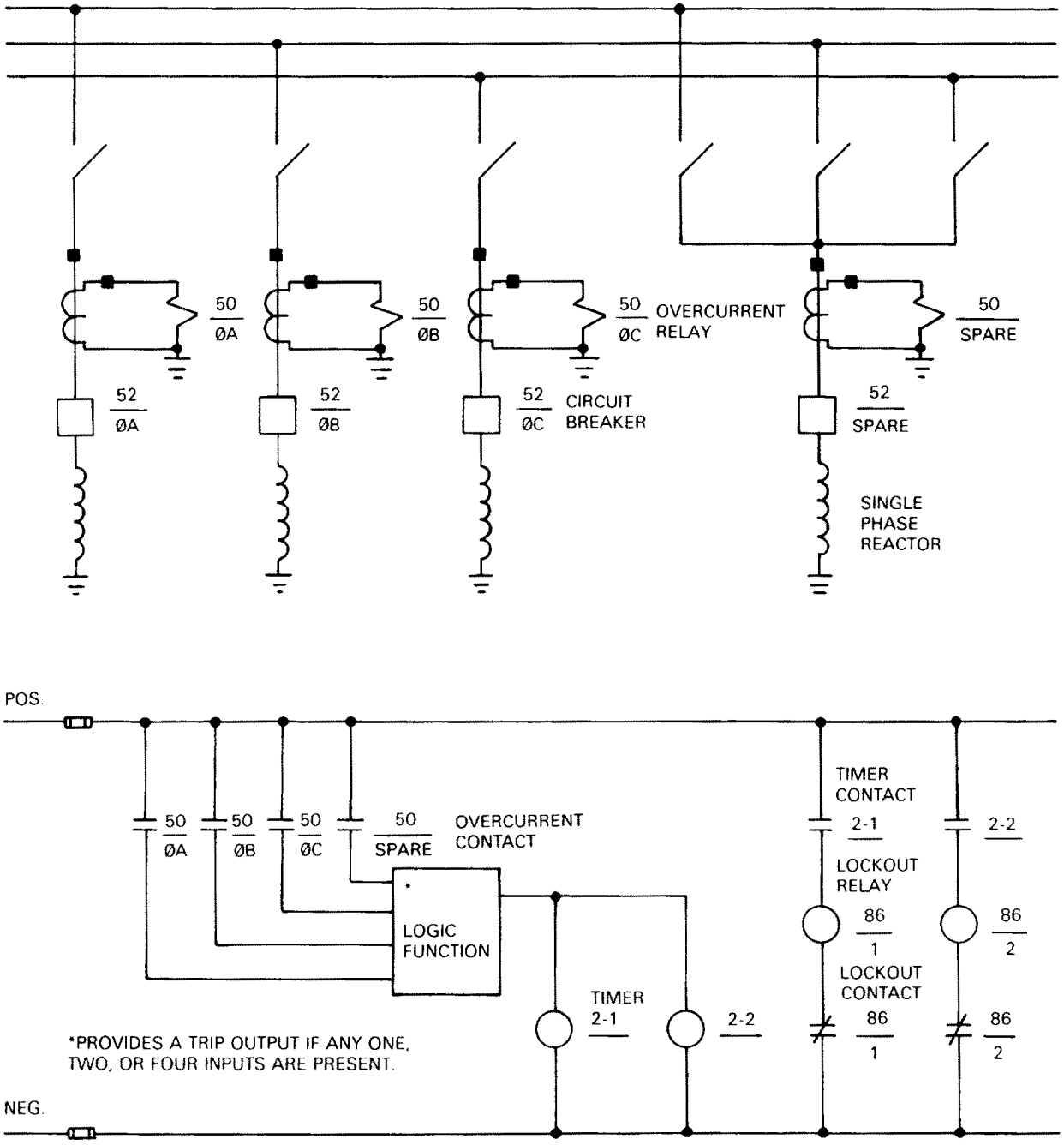

Figure 9—Pole Disagreement Protection for Three-Phase Reactor Installation With Switchable Spare Reactor

Split phase protection is an option for reactors in the EHV range and is shown in Figs 5.A and 5.B. For such applications, the disc type reactor windings are split into two parallel groups with separate neutral connections brought out for each group. Two alternatives using three-phase and single-phase sensing are shown respectively in Figs 5.A and 5.B. In Fig 5.B the two neutral end leads are brought together in opposition through a current transformer which picks up the current difference. Any turn-to-turn fault in the winding will create a strong imbalance between the impedances

Copyright © 1988 IEEE All Rights Reserved

Copyright The Institute of Electrical and Electronics Engineers, Inc.
Provided by IHS under license with IEEE
No reproduction or networking permitted without license from IHS
Not for Resale

of the two halves and create a corresponding current imbalance. The relay used is a three-phase overcurrent relay set at approximately 2.5 percent of reactor rated current.

The gas accumulator relay is applicable on reactors which are equipped with conservator tanks and have no gas space inside the reactor tank. This relay is inserted in the pipe between the reactor and the expansion chamber (conservator). Low-energy partial discharges, creepage, and overheating caused by turn-to-turn short circuits, or by high contact resistance cause the insulation at these points to slowly decompose while evolving gas. The gas rises through the oil and is accumulated in the relay. The relay will also operate for severe internal arcing or heavy-current flashovers, which force oil through the relay at a high velocity before the gases rise through the system to the device. This device is commonly known as a Buchholz relay.

The sudden-gas-pressure relay, also known as a fault-pressure relay, is applicable to gas-cushioned oil-immersed reactors. The relay is mounted on the reactor tank in the region of the gas space at the top of the reactor, and consists of a pressure-sensing bellows, a pressure-actuated switch, and a pressure-equalizing orifice. The relay operates on the difference between the pressure in the gas space of the reactor and the pressure inside the relay. During slow pressure variations associated with reactor temperature changes, the pressure-equalizing orifice will equalize the pressure between the relay and the reactor, and thus prevent operation. For internal arcing that produces large amounts of gas and a sudden rise in gas pressure, the bellows will expand, causing the relay to operate.

The sudden-oil-pressure relay, another type of fault-pressure relay, is applicable to all oil-immersed reactors. The relay is mounted on the reactor tank below the minimum deenergized liquid level. Oil fills the lower chamber of the relay housing, within which a spring-backed bellows is located. The bellows is completely filled with silicone oil. There is also silicone oil in the upper chamber, which is connected to the bellows via an equalizer hole. Should an internal fault develop, the resulting rapid rise in oil pressure, or pressure pulse, is transmitted to the bellows, causing the relay to operate. In the event of gradual increases in oil pressure, due to temperature variations in the reactors, the equalizing hole stabilizes the pressure in the bellows and keeps the relay from operating.

7.4.3 Loss of Cooling

Oil-immersed reactors are sometimes built with forced cooling to reduce size and cost. For such reactors, the cooling is critical and must be operational any time the reactor is energized.

The loss of cooling can be detected by monitoring the oil flow with flow indicators, monitoring the a.c. supply voltage to the cooling fans and oil pumps, and by monitoring the temperature with temperature relays.

The oil-flow and a.c. supply-voltage indicators are usually connected for alarm only. The temperature relays are generally connected to trip and remove the reactor from service. To adequately protect the reactor, a combination of all the above indicators is usually recommended.

7.4.4 Overvoltage

Transmission line reactors are generally installed to provide inductive reactance to control system voltage and to compensate for the effects of the high charging current of long lines or pipe-type cables or both. They will also serve to reduce the risk of excessively high voltage at the line terminals, particularly when the local circuit breaker(s) is (are) open and the line is energized from the remote end.

Overvoltage relays may be used to disconnect the reactors under extreme high-voltage conditions, but in this case, the associated transmission line must be de-energized at the same time, otherwise disconnection of the reactors would only further aggravate the overvoltage condition on the system [2].

7.4.5 Pole Disagreement Protection

In the application of shunt reactors at the terminals of EHV lines and buses, it is generally desirable to provide a means of switching the reactor bank for protection of the reactors and/or for system operating requirements. Because of the

Copyright © 1988 IEEE All Rights Reserved

Copyright The Institute of Electrical and Electronics Engineers, Inc.
Provided by IHS under license with IEEE
No reproduction or networking permitted without license from IHS Not for Resale

voltage level involved, the switching equipment usually consists of single pole devices which are not mechanically linked, with each pole having an independent operator. With such an arrangement, the possibility exists that one pole may not operate coincidentally with the other poles, thus creating an undesirable imbalance in system voltages or, in case the switching equipment were called upon to isolate the reactor bank to clear a fault, might fail to remove the faulted reactor from service.

To ensure that all poles of the switching equipment function in unison, two methods of detecting pole disagreement can be used, either together or separately. The first method utilizes auxiliary contacts on the various pole operators of the switching equipment, interconnecting “a” and “b” contacts of the devices, so that if all poles are not open or closed at the same time a trip circuit is provided to trip all poles of the switching equipment or, additionally, to trip backup circuit breakers to isolate the switching equipment. Such a scheme is shown in Fig 8, which illustrates the application for a three-pole reactor switching arrangement.

A second method of detecting pole disagreement uses a pole disagreement relay[4] designed to compare the currents in each reactor connected to the transmission system. One way in which this comparison can be made is illustrated in Fig 9, in which a spare reactor is provided that can be switched to replace any of the normal phase reactors. The scheme shown in Fig 9 provides for two trip outputs with separately adjustable time delays. The shorter delay is used to trip the reactor switch(es) in the event of a current disagreement between phases. The longer delay trips local and remote line circuit breakers if the first trip fails to clear the pole disagreement condition. As shown, the scheme relies on a multiphase comparison of logic derived from the line current inputs, including that from the spare reactor, and coordinating timers.

8. Bibliography

[B1] BLACKBURN, J.L., Protection of Shunt Reactors, Silent Sentinels RPL 77-1, *Westinghouse Electric Corporation Publication*, Nov. 1977.

[B2] CARLSON, L., et al, Single-Pole Reclosing on EHV Lines, *International Conference on Large High-Voltage Electrical Systems*, CIGRE, Paris, France, paper No. 31-03, 1974.

[B3] COPPER, J.W. and EILTS, L.W., Relay for Ungrounded Shunt Reactors, *IEEE Transactions on Power Apparatus and Systems*, Vol PAS-92, Jan./Feb. 1973, pp 116–121.

[B4] FELDMAN, J.M. and WILSON, D.D. Shunt Reactor Compensation on Present and Future Transmission Systems, *American Power Conference*, Apr. 1969.

[B5] LaFOREST, J. J., et al, Resonant Voltages on Reactor Compensated Extra-High-Voltage Lines, *IEEE Transactions on Power Apparatus and Systems*, Vol PAS-91, Nov./Dec. 1972, pp 2528–2536,.

[B6] Reactors, *International Electrotechnical Commission Publication 289*, 1968.

[B7] The Art of Protective Relaying—Power Systems Protection for EHV Systems, *General Electric Company Publication GET-7207*, Jan. 1965.

[4]A pole disagreement relay is defined as a relay designed to compare currents in three phases of a series device, such as a breaker, or a shunt device, such as a reactor. One high and one low-phase current persisting for a time is identified as a pole disagreement.

Copyright © 1988 IEEE All Rights Reserved

--`,,`,,-`-`,,`,,`,`,,`---

Copyright The Institute of Electrical and Electronics Engineers, Inc.
Provided by IHS under license with IEEE
No reproduction or networking permitted without license from IHS Not for Resale