IEEE Standards

IEEE Std C37.108™-2002
(Revision of C37.108-1989)

C37.108™

IEEE Guide for the Protection of Network Transformers

IEEE Power Engineering Society

Sponsored by the
Power System Relaying Committee

IEEE

Published by
The Institute of Electrical and Electronics Engineers, Inc.
3 Park Avenue, New York, NY 10016-5997, USA

19 September 2002

Print: SH94988
PDF: SS94988

Copyright The Institute of Electrical and Electronics Engineers, Inc.
Provided by IHS under license with IEEE
No reproduction or networking permitted without license from IHS

Not for Resale

Recognized as an
American National Standard (ANSI)

IEEE Std C37.108™-2002
(Revision of
IEEE Std C37.108-1989)

IEEE Guide for the Protection of Network Transformers

Sponsor

Power System Relaying Committee
of the
IEEE Power Engineering Society

Approved 21 March 2002

IEEE-SA Standards Board

Abstract: Guidelines for the application of network protectors are established. The use of network transformers and protectors with distributed resources is addressed.
Keywords: distribution generation, master relay, network limiter, network protector, network relays, network transformers, spot networks

---

The Institute of Electrical and Electronics Engineers, Inc.
3 Park Avenue, New York, NY 10016-5997, USA

Copyright © 2002 by the Institute of Electrical and Electronics Engineers, Inc.
All rights reserved. Published 19 September 2002. Printed in the United States of America.

National Electrical Code and NEC are both registered trademarks of the National Fire Protection Association, Inc.

National Electrical Safety Code and NESC are both registered trademarks and service marks of the Institute of Electrical and Electronics Engineers, Inc.

IEEE Green Book and IEEE Buff Book are registered trademarks of the Institute of Electrical and Electronics Engineers, Inc.

Print: ISBN 0-7381-3257-8 SH94988
PDF: ISBN 0-7381-3258-6 SS94988

No part of this publication may be reproduced in any form, in an electronic retrieval system or otherwise, without the prior written permission of the publisher.

Copyright The Institute of Electrical and Electronics Engineers, Inc.
Provided by IHS under license with IEEE
No reproduction or networking permitted without license from IHS
Not for Resale

IEEE Standards documents are developed within the IEEE Societies and the Standards Coordinating Committees of the IEEE Standards Association (IEEE-SA) Standards Board. The IEEE develops its standards through a consensus development process, approved by the American National Standards Institute, which brings together volunteers representing varied viewpoints and interests to achieve the final product. Volunteers are not necessarily members of the Institute and serve without compensation. While the IEEE administers the process and establishes rules to promote fairness in the consensus development process, the IEEE does not independently evaluate, test, or verify the accuracy of any of the information contained in its standards.

Use of an IEEE Standard is wholly voluntary. The IEEE disclaims liability for any personal injury, property or other damage, of any nature whatsoever, whether special, indirect, consequential, or compensatory, directly or indirectly resulting from the publication, use of, or reliance upon this, or any other IEEE Standard document.

The IEEE does not warrant or represent the accuracy or content of the material contained herein, and expressly disclaims any express or implied warranty, including any implied warranty of merchantability or fitness for a specific purpose, or that the use of the material contained herein is free from patent infringement. IEEE Standards documents are supplied "**AS IS**."

The existence of an IEEE Standard does not imply that there are no other ways to produce, test, measure, purchase, market, or provide other goods and services related to the scope of the IEEE Standard. Furthermore, the viewpoint expressed at the time a standard is approved and issued is subject to change brought about through developments in the state of the art and comments received from users of the standard. Every IEEE Standard is subjected to review at least every five years for revision or reaffirmation. When a document is more than five years old and has not been reaffirmed, it is reasonable to conclude that its contents, although still of some value, do not wholly reflect the present state of the art. Users are cautioned to check to determine that they have the latest edition of any IEEE Standard.

In publishing and making this document available, the IEEE is not suggesting or rendering professional or other services for, or on behalf of, any person or entity. Nor is the IEEE undertaking to perform any duty owed by any other person or entity to another. Any person utilizing this, and any other IEEE Standards document, should rely upon the advice of a competent professional in determining the exercise of reasonable care in any given circumstances.

Interpretations: Occasionally questions may arise regarding the meaning of portions of standards as they relate to specific applications. When the need for interpretations is brought to the attention of IEEE, the Institute will initiate action to prepare appropriate responses. Since IEEE Standards represent a consensus of concerned interests, it is important to ensure that any interpretation has also received the concurrence of a balance of interests. For this reason, IEEE and the members of its societies and Standards Coordinating Committees are not able to provide an instant response to interpretation requests except in those cases where the matter has previously received formal consideration.

Comments for revision of IEEE Standards are welcome from any interested party, regardless of membership affiliation with IEEE. Suggestions for changes in documents should be in the form of a proposed change of text, together with appropriate supporting comments. Comments on standards and requests for interpretations should be addressed to:

Secretary, IEEE-SA Standards Board
445 Hoes Lane
P.O. Box 1331
Piscataway, NJ 08855-1331
USA

Note: Attention is called to the possibility that implementation of this standard may require use of subject matter covered by patent rights. By publication of this standard, no position is taken with respect to the existence or validity of any patent rights in connection therewith. The IEEE shall not be responsible for identifying patents for which a license may be required by an IEEE standard or for conducting inquiries into the legal validity or scope of those patents that are brought to its attention.

Authorization to photocopy portions of any individual standard for internal or personal use is granted by the Institute of Electrical and Electronics Engineers, Inc., provided that the appropriate fee is paid to Copyright Clearance Center. To arrange for payment of licensing fee, please contact Copyright Clearance Center, Customer Service, 222 Rosewood Drive, Danvers, MA 01923 USA; +1 978 750 8400. Permission to photocopy portions of any individual standard for educational classroom use can also be obtained through the Copyright Clearance Center.

Copyright The Institute of Electrical and Electronics Engineers, Inc.
Provided by IHS under license with IEEE
No reproduction or networking permitted without license from IHS
Not for Resale

Introduction

(This introduction is not part of IEEE Std C37.108-2002, IEEE Guide for the Protection of Network Transformers.)

This guide was prepared by the Network Transformer Protection Working Group of the Substation Protection Subcommittee of the IEEE Power System Relaying Committee. This guide is intended to aid in the effective application of relays and other devices for the protection of power transformers in network transformer vaults. New additions to this guide include clauses on distributed source generation and network distribution Supervisory Control and Data Acquisition (SCADA).

Network distribution systems differ from radial distribution systems due to several factors. These factors include: high-fault currents on the low-voltage side of the transformers, possible frequent operation of network protectors, varying practices of providing dedicated high-voltage transformer protection, confined spaces, backfeed issues, and proximity to dense public populations in city streets and office buildings.

Protection techniques presented in this guide will help minimize the effects and damage caused by network faults. However, proper protection applications are only a supplement to other important issues related to network power equipment. These issues, covered in other appropriate publications, include the following items:

a) Vault and equipment design, construction, operation, and maintenance should conform with applicable standards and regulations, including company, municipal, state, and country operating rules.

b) Manufacturers' recommended operating and maintenance procedures should always be utilized.

Participants

At the time this guide was approved, the working group membership was as follows:

C. R. Sufana, *Chair*

J. J. Horwath, *Vice Chair*

C. H. Castro
W. T. Chew
S. P. Conrad
C. J. Cook
D. J. Finley
D. Fulton
S. E. Grier
J. W. Hohn
H. D. Joham
R. J. Landman
J. Moffat
G. P. Moskos
K. K. Mustaphi
A. P. Napikoski
S. Phegley
H. J. Pinto
R. V. Rebbapragada
D. R. Smith
T. E. Wiedman

Copyright © 2002 IEEE. All rights reserved.

Copyright The Institute of Electrical and Electronics Engineers, Inc.
Provided by IHS under license with IEEE
No reproduction or networking permitted without license from IHS
Not for Resale

The following members of the balloting committee voted on this standard. Balloters may have voted for approval, disapproval, or abstention.

Hanna E. Abdallah
William J. Ackerman
Alexander P. Apostolov
Thomas M. Barnes
George J. Bartok
Robert W. Beckwith
Kenneth L. Black
Jack A. Buchsbaum
John F. Burger
Jeffrey A. Burnworth
Simon R. Chano
James F. Christensen
Stephen P. Conrad
Ken L. Cooley
Robert W. Dempsey
Frank A. Denbrock
William K. Dick
Clifford Downs
Ahmed Elneweihi
Markus E. Etter
Dennis R. Falkenheim
Joseph R. Fragola
Jeffrey G. Gilbert
Stephen E. Grier
E. A. Guro
Robert W. Haas
David L. Harris
Roy E. Hart
Irwin O. Hasenwinkle
Roger A. Hedding
Charles F. Henville
Gary R. Hoffman
Jerry W. Hohn
John J. Horwath
James D. Huddleston, III
James W. Ingleson
George G. Karady
Mark J. Kempker
Hermann Koch
Terry L. Krummrey
Robert Landman
Lawrence M. Laskowski
William J. Marsh, Jr.
J. E. McConnell
Michael J. McDonald
M. Meisinger
A. P. Sakis Meliopoulos
Gary L. Michel
Daleep C. Mohla
George Moskos
Charles J. Mozina
Brian Mugalian
George R. Nail
Philip R. Nannery
Benson P. Ng
Michael W. Pate
Shashi G. Patel
Carlos O. Peixoto
Gary A. Petersen
Alan C. Pierce
Henry Pinto
John M. Postforoosh
Roger E. Ray
Radhakrishna V. Rebbapragada
Paulo F. Ribeiro
Jesus Martinez Rodriguez
Miriam P. Sanders
David Shafer
Tarlochan Sidhu
Mark S. Simon
Patrick Smith
James E. Stephens
Peter G. Stewart
James E. Stoner
William M. Strang
Charles R. Sufana
Malcolm J. Swanson
Richard P. Taylor
Bill Thompson
James S. Thorp
Charles F. Todd
Demetrios A. Tziouvaras
Joe T. Uchiyama
Eric A. Udren
Charles L. Wagner
Ken D. White
Thomas E. Wiedman
Georg Wild
David J. Zaprazny
Janusz Zawadzki
Karl Zimmerman
John A. Zipp
John A. Zulaski

Copyright © 2002 IEEE. All rights reserved.

Copyright The Institute of Electrical and Electronics Engineers, Inc.
Provided by IHS under license with IEEE
No reproduction or networking permitted without license from IHS
Not for Resale

When the IEEE-SA Standards Board approved this standard on 21 March 2002, it had the following membership:

James T. Carlo, *Chair*
James H. Gurney, *Vice Chair*
Judith Gorman, *Secretary*

Sid Bennett
H. Stephen Berger
Clyde R. Camp
Richard DeBlasio
Harold E. Epstein
Julian Forster*
Howard M. Frazier
Toshio Fukuda
Arnold M. Greenspan
Raymond Hapeman
Donald M. Heirman
Richard H. Hulett
Lowell G. Johnson
Joseph L. Koepfinger*
Peter H. Lips
Nader Mehravari
Daleep C. Mohla
Willaim J. Moylan
Malcolm V. Thaden
Geoffrey O. Thompson
Howard L. Wolfman
Don Wright

*Member Emeritus

Also included is the following nonvoting IEEE-SA Standards Board liaison:

Alan Cookson, *NIST Representative*
Satish K. Aggarwal, *NRC Representative*

Noelle D. Humenick
IEEE Standards Project Editor

Copyright © 2002 IEEE. All rights reserved.

Copyright The Institute of Electrical and Electronics Engineers, Inc.
Provided by IHS under license with IEEE
No reproduction or networking permitted without license from IHS
Not for Resale

Contents

1. Overview 1

2. References 2

3. Definitions 3

4. General background 4

4.1 Network development 4
4.2 Application considerations of adding protection to spot-network vaults versus grid-network vaults 6

5. Operation of equipment in a network transformer vault under fault conditions 6

5.1 Primary feeder faults 6
5.2 Network equipment faults 7

6. Methods available to provide improved network transformer protection 10

6.1 Electrical detection of faults 10
6.2 Mechanical detection of faults 13
6.3 Thermal detection of faults 14
6.4 Ultraviolet detectors 15

7. High-voltage, fault-interrupting devices 15

7.1 Circuit breakers 15
7.2 Remotely located circuit breakers with transfer tripping 15
7.3 Fault interrupters 16
7.4 Power fuses and current-limiting fuses 16

8. Low-voltage, fault-interrupting devices 18

8.1 Network protector 18
8.2 Low-voltage fuses 18

9. Distributed source generation 18

10. Network distribution SCADA 20

Annex A (informative) Response of network relays to system faults 21

Annex B (informative) Example: 12.5 kV/480Y/277 V spot vault network transformer protection 24

Annex C (normative) Other concepts being investigated 29

Annex D (informative) Bibliography 30

Copyright © 2002 IEEE. All rights reserved.

Copyright The Institute of Electrical and Electronics Engineers, Inc.
Provided by IHS under license with IEEE
No reproduction or networking permitted without license from IHS
Not for Resale

IEEE Guide for the Protection of Network Transformers

1. Overview

Network transformer vaults are fire retardant enclosures normally within or adjacent to buildings or underneath streets and alleys. They typically contain two or more power transformers. These transformers are supplied from different subtransmission or distribution lines and are paralleled on their low-voltage side through circuit interrupting devices called *network protectors.* Typically, high-voltage current-interrupting devices have not been applied within the network vault. The low-voltage bus of a network vault may be electrically tied to a number of other vaults to form a network secondary distribution system, which will be called a *low-voltage network grid* in this guide, or each individual vault may stand alone as a *spot network.* A one-transformer vault can be considered a network vault if connected to other such vaults via low-voltage cables.

Low voltage in this guide implies 600 V or less, and high voltage implies 2400 to 34 500 V. Typical low voltages are 208Y/120 V, 480Y/277 V, and 600Y/347 V. A typical high voltage is 12 500 V.

Low-voltage network systems have been used since the 1920s as a method of providing a highly reliable source of electrical power to densely populated commercial areas, such as office buildings. Equipment protection within the network vaults is typically limited. Historically, users have depended upon the physical design of the vault to limit the risks of fault damage for faults within the vault. They have relied upon remote detection and interruption for transformer faults and low-voltage devices, such as transformer fuse links and low-voltage cable limiters, to provide a measure of low-voltage bus fault protection.

This guide is intended to aid those engineers who have reevaluated problems associated with faults within network vaults, particularly for those network vaults located within or near high-rise buildings. It will also identify currently available devices that are being used in network transformer protection schemes. These devices should act to sense the fault and initiate fault interruption locally or remotely, thereby minimizing damage and restoration time. These devices will be described as to their fault detecting capabilities.

Several annexes are included with this guide. Annex A describes network protector response for high-voltage feeder faults. An example utilizing a number of protective schemes is presented in Annex B. Annex C addresses other concepts that are currently being investigated. Annex D provides bibliographic references, such as IEEE® Conference papers and IEEE Transaction papers, e.g., Anderson [B1].[1, 2]

[1]The mark IEEE is a registered trademark belonging to the Institute of Electrical and Electronics Engineers, Inc.

[2]The numbers in brackets correspond to those of the bibliography in Annex D.

Copyright © 2002 IEEE. All rights reserved.

Copyright The Institute of Electrical and Electronics Engineers, Inc.
Provided by IHS under license with IEEE
No reproduction or networking permitted without license from IHS
Not for Resale

2. References

This guide shall be used in conjunction with following publications. When the following standards are superseded by an approved revision, the revision shall apply.

Accredited Standards Committee C2-2002, National Electrical Safety Code® (NESC®).[3]

ANSI C37.16-1997, American National Standard for Switchgear—Low-Voltage Power Circuit Breakers and AC Power Circuit Protectors—Preferred Ratings, Related Requirements, and Application Recommendations.[4]

ANSI C37.42-1996, American National Standard for Switchgear—Distribution Cutouts and Fuse Links—Specifications.

ANSI C37.47-1981 (R1988), American National Standard Specifications for Distribution Fuse Disconnecting Switches, Fuse Supports, and Current-Limiting Fuses.

ANSI C37.50-1989 (R2000), American National Standard for Switchgear—Low Voltage AC Power Circuit Breakers Used in Enclosure—Test Procedures.

ANSI C37.51-1989 (R1995), American National Standard for Switchgear—Metal-Enclosed Low-Voltage AC Power Circuit-Breaker Switchgear Assemblies—Conformance Test Procedures.

ANSI C57.12.40-2000, American National Standard for Network Transformers—Subway and Vault Types (Liquid Immersed)—Requirements.

IEEE Std 80™-2000, IEEE Guide for Safety in AC Substation Grounding.[5, 6]

IEEE Std 142™-1991, IEEE Recommended Practice for Grounding of Industrial and Commercial Power Systems, *IEEE Green Book*™.

IEEE Std 242™-2001, IEEE Recommended Practice for Protection and Coordination of Industrial and Commercial Power Systems, *IEEE Buff Book*™.

IEEE Std C37.2™-1996, IEEE Standard Electrical Power System Device Function Numbers and Contact Designations.

IEEE Std C37.13™-1990 (Reaff 1995), IEEE Standard for Low-Voltage AC Power Circuit Breakers Used in Enclosures.

IEEE Std C37.20.1™-1993 (Reaff 1998), IEEE Standard for Metal-Enclosed Low-Voltage Power Circuit Breaker Switchgear.

IEEE Std C37.29™-1981 (Reaff 1990), IEEE Standard for Low-Voltage AC Power Circuit Protectors Used in Enclosures.

---

[3]The NESC is available from the Institute of Electrical and Electronics Engineers, 445 Hoes Lane, P.O. Box 1331, Piscataway, NJ 08855-1331, USA (http://standards.ieee.org/).

[4]ANSI publications are available from the Sales Department, American National Standards Institute, 25 West 43rd Street, 4th Floor, New York, NY 10036, USA (http://www.ansi.org/).

[5]IEEE publications are available from the Institute of Electrical and Electronics Engineers, 445 Hoes Lane, P.O. Box 1331, Piscataway, NJ 08855-1331, USA (http://standards.ieee.org/).

[6]The IEEE standards referred to in Clause 2 are trademarks of the Institute of Electrical and Electronics Engineers, Inc.

Copyright © 2002 IEEE. All rights reserved.

--`,,`-`-`,,`,,`,`,,`---

Copyright The Institute of Electrical and Electronics Engineers, Inc.
Provided by IHS under license with IEEE
No reproduction or networking permitted without license from IHS Not for Resale

IEEE Std C37.41™-2000, IEEE Standard Design Tests for High-Voltage Fuses, Distribution Enclosed Single-Pole Air Switches, Fuse Disconnecting Switches, and Accessories.

IEEE Std C37.60™-1981 (Reaff 1992), IEEE Standard Requirements for Overhead, Pad Mounted, Dry Vault, and Submersible Automatic Circuit Reclosers and Fault Interrupters for AC Systems.

IEEE Std C37.91™-2000, IEEE Guide for Protective Relay Applications to Power Transformers.

IEEE Std C57.12.44™-2000, IEEE Standard Requirements for Secondary Network Protectors.

IEEE Std C57.109™-1993, IEEE Guide for Transformers Through-Fault-Current Duration.

NFPA 70-1999, National Electrical Code® (NEC®).[7]

3. Definitions

The following definitions are found in *The Authoritative Dictionary of IEEE Standards Terms*, Seventh Edition [B9] and may aid in the understanding of this guide.

3.1 network feeder: A feeder that supplies energy to a network.

3.2 network limiter: An enclosed fuse for disconnecting a faulted cable from a low-voltage network distribution system and for protecting the unfaulted portions of that cable against serious thermal damage.

3.3 network master relay: A relay that functions as a protective relay by opening a network protector when power is backfed into the supply system and as a programming relay by closing the protector in conjunction with the network phasing relay when polyphase voltage phasors are within prescribed limits.

3.4 network phase relay: A monitoring relay that has as its function to limit the operation of a network master relay so the network protector may close only when the voltages on the two sides of the protector are in a predetermined phasor relationship.

3.5 network protector (power and distribution transformers): An assembly comprising a circuit breaker and its complete control equipment for automatically disconnecting a transformer from a secondary network in response to predetermined electrical conditions on the primary feeder or transformer, and for connecting a transformer to a secondary network either through manual control or automatic control responsive to predetermined electrical conditions on the feeder and the secondary network.

3.6 network protector fuse: A backup device for the network protector.

3.7 network secondary distribution system: A system of alternating current distribution in which the secondaries of the distribution transformers are connected to a common network for supplying light and power directly to consumers' services.

3.8 network transformer (power and distribution transformers): A transformer designed for use in a vault to feed a variable capacity system of interconnected secondaries.

3.9 network tripping and reclosing equipment: A piece of equipment that automatically connects its associated power transformer to an ac network when conditions are such that the transformer, when connected,

[7]The NEC is published by the National Fire Protection Association, Batterymarch Park, Quincy, MA 02269, USA (http://www.nfpa.org/). Copies are also available from the Institute of Electrical and Electronics Engineers, 445 Hoes Lane, P.O. Box 1331, Piscataway, NJ 08855-1331, USA (http://standards.ieee.org/).

Copyright © 2002 IEEE. All rights reserved.

Copyright The Institute of Electrical and Electronics Engineers, Inc.
Provided by IHS under license with IEEE
No reproduction or networking permitted without license from IHS Not for Resale

will supply power to the network and automatically disconnects the transformer from the network when power flows from the network to the transformer.

3.10 spot network: A small network, usually at one location, consisting of two or more primary feeders, with network units and one or more load service connections.

3.11 spot-network type: A unit substation, which has two step-down transformers, each connected to an incoming high-voltage circuit. The outgoing side of each transformer is connected to a common bus through circuit breakers equipped with relays that are arranged to trip the circuit breaker on reverse power flow to the transformer and to reclose the circuit breaker upon the restoration of the correct voltage, phase angle, and phase sequence at the transformer secondary.

3.12 vault: A structurally solid enclosure above or below ground with access limited to personnel qualified to install, maintain, operate, or inspect the equipment or cable enclosed.

3.13 vault-type transformer (power and distribution transformers): A transformer that is constructed so as to be suitable for occasional submerged operation in water under specified conditions of time and external pressure.

4. General background

The physical and electrical characteristics of network transformer vaults have evolved over time, as have the characteristics of the load that they serve. This clause gives a brief description of this evolution. The application considerations of grid versus spot-network vaults and of 208Y/120 V versus 480Y/277 V secondaries are also discussed.

4.1 Network development

The first low-voltage ac network system is reported to have been installed in Memphis, Tennessee, about 1907. The network transformers were supplied by primary feeders through distribution cutouts and were connected to a solid grid of low-voltage cables that were protected with fuses. In Seattle, Washington, in 1921, improvements were made in the basic system by connecting the secondary terminals of the network transformers to the solid cable grid through network protectors that would trip automatically upon reverse power flow and were reclosed manually. In 1922, the first ac network system in which network protectors were automatically tripped and closed by relays was placed in service in New York, NY by the United Electric Light and Power Company. The cable grid was a three-phase, four-wire system and it operated at a nominal voltage of 208Y/120 V. By 1925, this type of system became an accepted method of supplying combined power and lighting load. Today's 208Y/120 V network grid systems are very similar in configuration and basic operation to the first systems. It is from these systems that the design, operating practices, and overcurrent protection practices evolved for the first 480Y/277 V spot networks installed in this country.

Grid networks served the needs of the commercial areas of many cities until the early 1950s, although it was necessary to develop network protectors of higher continuous current ratings to carry the increasing loads. By then, the loads in some commercial buildings were reaching the level where it was very difficult or uneconomical for the utility to supply the load at 208Y/120 V from either a grid or spot network. These higher loads were due mainly to air conditioning, higher lighting levels, and larger buildings. Furthermore, the wiring costs of the building systems became very high as the loads increased at this voltage level.

Because of economics and equipment availability, higher utilization voltages, either 460Y/265 V or 480Y/277 V, were adopted for service to large commercial buildings. Use of these higher voltages resulted in significant reductions in wiring costs and in the cost of the utility system supplying the building load. Many

Copyright © 2002 IEEE. All rights reserved.

Copyright The Institute of Electrical and Electronics Engineers, Inc.
Provided by IHS under license with IEEE
No reproduction or networking permitted without license from IHS Not for Resale

utilities decided to serve these loads from 480Y/277 V spot networks. One utility made its first 480Y/277 V installation in 1937, and by 1954 had eighteen 480Y/277 V vaults in service.

Figure 1 illustrates a typical network system. Many present-day network systems are installed without network transformer high-side switches. The primary distribution substation bus may have several bus tie or sectionalizing breakers in order to insure a reliable supply to the network. The bus tie breakers are normally closed, but may be opened when there is an adequate source to each bus section to avoid voltage differences between bus sections. A difference in bus voltage magnitude or angle may unload some feeders and cause network protectors to open.

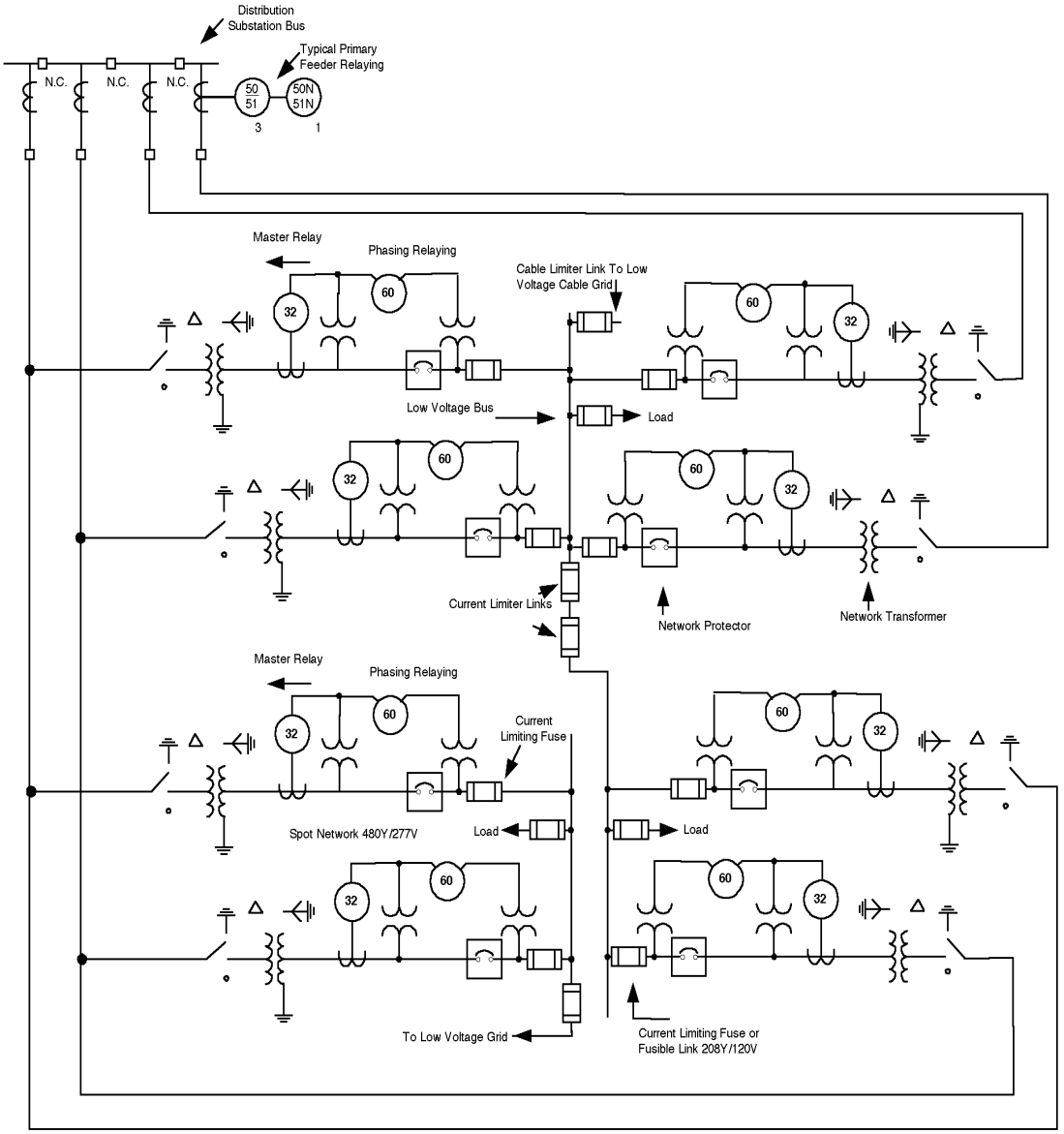

Figure 1—Typical network system

Copyright © 2002 IEEE. All rights reserved.

Copyright The Institute of Electrical and Electronics Engineers, Inc.
Provided by IHS under license with IEEE
No reproduction or networking permitted without license from IHS
Not for Resale

4.2 Application considerations of adding protection to spot-network vaults versus grid-network vaults

As noted earlier, the first network vault installations were operated primarily at 208Y/120 V and were connected to other vaults on the low-voltage side. These vaults were generally located below grade and external from buildings, for example, underneath sidewalks in business districts. Historical evidence indicates that 208Y/120 V faults in these vaults were generally self-clearing. That is, faults were contained within the vault enclosure and the locations of the vaults were sufficiently isolated from buildings to allow for the fault to continue until enough conductive material melted, thereby extinguishing the fault-generated arc without damaging the buildings.

As the loading in newly constructed high-rise buildings increased, the 208Y/120 V vaults were installed inside them and dedicated to serving the load of the building. Due to the economics of scale, the building vaults had enough capacity to supply the building load with at least a single contingency outage margin. Ties between vaults were no longer needed or practical and the era of the spot-network vault was born. Eventually, 480Y/277 V spot-network vaults replaced the 208Y/120 V spot networks, and during this transition period, some small 480Y/277 V grid-network systems were installed.

These changes prompted consideration by some utilities to provide additional network vault protection. Frequently, the damage due to arcing 480 V faults has caused lengthy power outages to buildings, more so than at 208 V. Since many of these vaults are inside buildings, a higher incidence of damage caused by smoke has occurred. This has prompted some utilities to provide additional network vault protection.

The principles of protection included in this guide apply equally to spot-network vaults or grid-network vaults and at any low-voltage level. The need to consider additional protection and the associated high-voltage interrupting devices should be evaluated on the basis of risk assessment and cost.

5. Operation of equipment in a network transformer vault under fault conditions

A network system can be separated into three parts when considering operation under fault conditions:

a) The high-voltage primary supply circuits,
b) The network equipment, which consists of the network transformer, its associated primary-side switch (disconnect and grounding), the low-voltage network protector, and the low-voltage bus,
c) Secondary voltage supply to the consumer and interconnecting cables to other transformer vaults, if any.

Typical network transformer protective devices for faults in the vault and external to it are described in the remainder of this clause.

5.1 Primary feeder faults

Referring to Figure 1, a short circuit on a high-voltage primary feeder circuit is cleared by tripping the primary feeder breaker at the distribution substation and opening the network protectors of the transformers connected to the faulted feeder. Primary feeder breaker tripping is usually controlled by nondirectional time and instantaneous overcurrent relays sensing both phase and ground (residual) currents (devices 50/51 and 50N/51N). The network master relay (device 32) will trip its protector if the net three-phase power (watt) flow is in the reverse direction, i.e., from the low-voltage bus back to the high-voltage feeder. The sensitively set network master relay operates by sensing the reverse flow of real power caused by transformer magnetizing and feeder load. If the feeder fault is single phase-to-ground and the network transformer is delta connected on the high side, opening the feeder breaker will limit fault current flow to a value allowed

Copyright © 2002 IEEE. All rights reserved.

Copyright The Institute of Electrical and Electronics Engineers, Inc.
Provided by IHS under license with IEEE
No reproduction or networking permitted without license from IHS Not for Resale

by the primary system capacitance. If shunt reactors or shunt capacitors are connected to the primary feeders, they will also influence the amount of current in the fault path. Some network transformer primaries are connected wye grounded and will permit fault current to flow until its protector opens via the network master relay. Some types of feeders, for example those with fused sections supplying the network unit, require that a watt-var network master relay be applied. See Annex A for a description of the operation of the network protector relays.

The feeder breaker and network protector may operate sequentially since the network master relay may not operate until the feeder breaker is open. Thus, clearing time is equal to the sum of the feeder relay time, feeder breaker time, network master relay time, protector opening time, and the arc interrupting time. Total clearing time is usually 0.5 s or less for faults on the primary feeder excluding the case of a single, phase-to-ground fault where the total clearing time can be higher due to the limited fault current flow after the feeder breaker opens. Clearing feeder faults in this fashion does not result in an outage to the load served by the network.

If the distribution voltage feeder circuit breaker fails to clear the fault, conventional breaker failure relaying or other forms of backup relaying, such as power transformer overcurrent relays, operate to trip the feeder breaker to isolate the fault. If the network protector fails to clear the fault, then the transformer low-voltage current-limiting fuses or low-voltage fuse links are relied upon to melt due to the presence of line fault or line load current feeding back through the network transformer.

Low-voltage current-limiting fuses are silver and sand devices that are designed primarily to quickly interrupt high magnitude fault currents. The melted products are contained within a tubular enclosure where they harden into a glass-like insulating substance called a fulgurite. Fusible links are copper or alloy devices designed to carry high levels of transformer load current. They melt in the presence of transformer overcurrent and can be sized to coordinate with the transformer through-fault thermal limit curve. Figure 1 shows the location of these devices in series with the network protector.

5.2 Network equipment faults

The protection of network transformers should be viewed in light of the physical and electrical environment of the transformer. The majority of network transformers are located in vaults where space is at a premium. This means that the usual zones of protection are not well defined. Faults in buses, protectors, and switches may indirectly cause damage to the transformer itself.

5.2.1 Primary-voltage switch faults

Most network transformers are supplied by underground cables. These cables enter the transformer through a compartment filled with insulating compound. On many transformers, the separate phases are attached to a three-position disconnect switch in another insulating liquid-filled compartment. Both of these compartments are usually welded to the network transformer tank with a cover plate bolted to the front of the switch compartment.

Faults involving the high-voltage terminal compartment, disconnect switch, or the leads inside the network transformer up to the primary coils will result in the same level of fault current as a primary feeder fault. Such faults should be cleared by tripping the feeder breaker at the remote substation, opening the protector on the faulted network unit, and opening all other weak sources to the line. These weak sources, which are capable of sustaining voltage on the faulted line, are commonly called *sources of backfeed.* Sources of backfeed are usually other transformer(s) electrically connected to a transformer connected to the faulted line.

Faults in either compartment are generally detected quickly by the distribution substation source instantaneous trip elements, and locally by network protector reverse power relays. Subsequent clearing,

Copyright © 2002 IEEE. All rights reserved.

Copyright The Institute of Electrical and Electronics Engineers, Inc.
Provided by IHS under license with IEEE
No reproduction or networking permitted without license from IHS Not for Resale

even by 0.25 cycle current-limiting fuses, will not insure that these relatively small compartments will not be ruptured. Water leaking into the compartments is a common cause of these faults, as is low oil in the compartment. Another cause of faults within the compartment is improper operator switching, such as inadvertent grounding of the cable or opening of the transformer high-side disconnect switch under load.

5.2.2 Transformer faults

Transformer failure may result from winding-to-winding or winding-to-core faults, bushing failures, or other conditions. Faults in the high-voltage winding of the network transformer will be cleared by the same devices that clear faults in the high-voltage leads. However, the time required for the opening of the primary feeder breaker will be longer for a winding fault, since a portion of the transformer impedance is in the circuit.

Faults in the low-voltage winding of the transformer are cleared by opening the same devices. A fault in the low-voltage winding may have to burn back into the primary winding before it is detected by the primary feeder relays, which can result in prolonged fault clearing times. Furthermore, the ground relays for the primary feeder will not detect faults in the secondary winding of the network transformer if it is connected delta-wye. Experience has indicated that secondary winding faults are rare.

Transformer faults are cleared from the low-voltage bus by the operation of the network protector relays and the network protector. In the event of a protector failure to clear a fault, the network protector fuse links are relied upon to isolate the faulted transformer from the low-voltage bus and consumer load.

5.2.3 Protector faults

Faults within the protector itself are very difficult to clear without involving the transformer. One of the most serious consequences of a protector fault would be damage to a network transformer tank and fracture of the low-voltage porcelain bushings or epoxy bushings.

Arcing type faults involving the transformer low-voltage leads or the network protector may not be detected by the primary feeder relays. Arcing faults in these locations should be detected by the network master relay, which should initiate opening of the network protector. However, the network transformer may remain energized from the primary side. If the fault is self-sustaining in these areas, it can cause extensive damage to equipment until it burns to such an extent that the fault is detected by the primary feeder relays. By the time this happens, the fault may involve the network low-voltage bus.

If a fault starts in the protector on the network side of the network protector current transformers, it may not cause a reverse power flow in the protector, and the protector will not open. The primary feeder relays may not detect this fault until there is considerable damage to the equipment. Sustained faults in the network protector may be isolated from the low-voltage network by the network protector fuse links.

5.2.4 Low-voltage bus faults

The severity of low-voltage bus faults, as well as their frequency of occurrence, has proven to be dependent on voltage level, exposure to adverse ambient conditions, type of construction, equipment age, and size of transformers supplying the bus. All of these factors influence the self-sustaining nature of the electrical arc.

For systems operating at 208Y/120 V, there is less chance of damage or expansion of the fault into the network transformer. Bus faults that occur on systems operated at this voltage normally clear by self-extinguishing of the arc. This is especially true for open air constructed buses. Faults involving buses in ducts tend to be less self-extinguishing.

Copyright © 2002 IEEE. All rights reserved.

Copyright The Institute of Electrical and Electronics Engineers, Inc.
Provided by IHS under license with IEEE
No reproduction or networking permitted without license from IHS Not for Resale

For buses operated at 480Y/277 V, arcing faults generally do not self-extinguish. They tend to generate high arcing currents for short intervals, extinguish, and then reignite. The net result is that other equipment such as transformers, protectors, and feeder cables eventually become involved in the fault.

The only protection for low-voltage bus faults provided by the standard network unit is the protector fuse links. Some utilities have substituted silver and sand current-limiting fuses for these fuse links. (See 6.1 for a description of these devices.) Both devices function best for high-current sustained faults. For example, a sustained high-current primary feeder fault can be cleared by the fuse links before the transformer is damaged, if the protector fails to operate. The through current can be ten to sixteen times full-load current, depending on the number of transformers in the vault and their impedance. The drawback for this type of protection is for arcing low-voltage bus faults. With fault current averaging not much more than load current, these devices may operate only after tens of seconds or minutes have elapsed.

If the faulted low-voltage bus is a part of a low-voltage grid network, then the grid will also supply fault current to the bus via intervault cables. Cable limiters located at the ends of the interconnecting cables may melt or the fault must self-extinguish. These link-type devices are designed to coordinate with the through-fault capabilities of the cables and as such only provide incidental bus protection. Cable limiters are most frequently used with 208Y/120 V grid networks. Their primary function is to melt and isolate a faulted low-voltage cable from the network grid. For faults on a primary feeder where a network protector fails to open, the protector's fuse links will usually melt before cable limiters in the 208Y/120 V system are damaged. Similarly, for faults in a 208Y/120 V intervault cable, it is desired that the cable limiters operate before the network protector fuses. For 208Y/120 V bus faults, coordination between cable limiters and protector fuse links in other network vaults is desirable but not always possible.

5.2.5 Low-voltage faults in customer supply cables and bus

One of the more common locations of a fault is in the consumer's switchgear or bus duct. Switch failures, insulating board tracking, rodent and insect infestation, and water in bus ducts are common causes of these types of faults. Damage to the consumer equipment rarely causes extensive damage to the utility vault. Low-voltage current-limiting fuses at both ends of cables supplying the consumer switchgear limit the damage in the cable section of the circuit. There may be four to eight cables per phase for each consumer supply between protectors and collector bus. These devices should coordinate with the network protector fuse links or current-limiting fuses.

Current-limiting fuses will generally operate to interrupt high-current consumer faults. However, for low-current arcing faults, especially at 480Y/277 V networks, they have proven to be ineffective.

5.2.6 Other faults

Fuse links mounted externally to the transformer protector have been a location for arcing faults on 480 V networks. Some fuse mounts are above the transformer protector and have a phenolic insulating board common to all phases. Evidence has shown that tracking has occurred between phases on this type of board due to water and contamination. Isolated phase construction of fuse mounts, or the use of interphase barriers, greatly increases the tracking distances, and hence decreases the probability of flashovers between phases. Alternatively, a barrier built above the fuse mounts would aid in reducing contamination. Enclosing the fuse links may prevent arc extinction for protector faults and result in additional equipment damage.

Other causes of vault faults include metering current transformer failures, high-voltage cable failures, insulation breakdown, and inadequate grounding. Insulation is exposed to various stress factors, such as thermal aging, electrical, mechanical, and environmental stresses. Utility and consumer vault ground grids should be properly connected to avoid cable and equipment damage when fault current seeks a path to return to the transformer on 480 V networks. Refer to NESC®, IEEE Std 80-2000, and IEEE Std 142-1991 for guidance on proper grounding.

Copyright © 2002 IEEE. All rights reserved.

Copyright The Institute of Electrical and Electronics Engineers, Inc.
Provided by IHS under license with IEEE
No reproduction or networking permitted without license from IHS Not for Resale

5.2.7 Primary-voltage cable faults

Primary-voltage cable faults have been attributed to many different causes, including improperly installed stress cones, where the primary-voltage cable comes into the high side of the transformer. Some failures have been caused by bad cable splices and normal service deterioration factors. There have been failures attributed to racking installation problems, where the cable has mechanically rubbed or chafed to the point of completely removing the external insulation jacket. Failed bail are another source of cable failure in that a retaining spring may corrode or weaken, allowing the bail to become partially or completely disengaged. Common elbow failures include cross-threaded pins and corona resulting from unrelieved pressure from improperly racked cables.

6. Methods available to provide improved network transformer protection

Clause 5 summarized the response of the typical network transformer protective devices to faults both internal and external to the vault. This clause describes additional protection techniques that can be used to promptly detect faults occurring within the vault and which can then be used to clear the faults by devices such as those referred to in 7.1, 7.2, and 7.3 of this guide.

6.1 Electrical detection of faults

6.1.1 Transformer differential relays

Current differential relaying can be used to protect network transformers. The relays are connected to current transformers on the high side and low side of the network transformer. The net operating current to the relays is the difference between input and output currents to the network transformer zone of protection. (See IEEE Std C37.91-2000 for details on relay types and current transformer connections.) Differential relaying provides a clearly defined zone of protection and is capable of sensitively detecting both multiphase and single phase-to-ground transformer faults.

Special protection concerns for protecting network transformers with differential relays are as follows:

a) There are generally no high-side current transformers on existing network transformers.
b) Limited vault space may make it difficult to add current transformers and/or high-side interrupting devices.

6.1.2 Overcurrent relays and fuses

A fault external to a transformer can result in damage to the transformer. If the fault is not cleared promptly, the resulting overcurrent on the transformer can cause severe overheating and failure. Overcurrent relays and/or fuses may be used to detect and clear the transformer from the faulted bus or line before the transformer exceeds the thermal or mechanical damage limits. On some transformers, overcurrent relays and/or fuses may provide protection for internal transformer faults. (See IEEE Std C37.91-2000 for details on applying time-overcurrent and instantaneous overcurrent relays.) Overcurrent relays, when applied to the high-voltage side of the network transformer, are an economical means to provide detection of a transformer fault. High-current faults can be detected by instantaneous overcurrent relays. Time-overcurrent devices may protect for low-side faults and may provide backup protection for downstream devices provided that these faults are not high-resistance arcing and low current. Overcurrent devices can be an alternative or supplemental protection to other forms of protection.

Special protection concerns for protecting network transformers with overcurrent relays are as follows:

a) There are generally no current transformers on existing transformers.

Copyright © 2002 IEEE. All rights reserved.

--`,,`-`-`,,`,,`,`,,`---

Copyright The Institute of Electrical and Electronics Engineers, Inc.
Provided by IHS under license with IEEE
No reproduction or networking permitted without license from IHS Not for Resale

b) Limited space may make it difficult to add high-side interrupting devices.
c) Arcing low-side fault currents may not be of sufficient magnitude to operate the overcurrent relays. However, there are several new high impedance/downed conductor/arcing detection relays being developed with potential for application here.
d) Coordination should be maintained with the network master relay for primary feeder faults.

Special protection concerns for protecting network transformers with fuses are as follows:

a) Undetected operation of only one fuse will result in a single-phase supply to the network transformer. Other transformers feeding the secondary system will hide the single-phased condition of the transformer since three-phase service is still provided to the load. The single-phase condition on the network transformer leads to tank and core overheating due to flux imbalance, and this can lead to transformer failure. In general, simple fuse protection of network transformers is not recommended for this reason alone. However, fuses may be applied, with protection sensing enhancements such as external means, to detect the single-phase condition with an interrupting device that can interrupt all three phases when this condition exists.
b) Limited space may make it difficult to add high-side fuse interrupting devices, especially those with schemes that can detect single-phase load conditions to operate a switch to open all three phases.
c) Concerns (3) and (4) for overcurrent relays apply to fuses also.

6.1.3 Ground-fault relays

Sensitive detection of ground faults can be obtained by differential relays or overcurrent relays specifically applied for that purpose. Several schemes are practical, depending on transformer connections, availability of current transformers, zero-sequence current source, system design, and operating practices. Annex B provides examples of ground-fault relay applications to network transformer protection.

Referring to Figure B.1 in Annex B, high-voltage ground-fault protection for transformer number one is accomplished with a sensitively set overcurrent device, 51N-T1, and an electronic fuse. The electronic fuse, described in 7.4, provides instantaneous protection for high-current faults. (See Figure B.2 in Annex B for the time versus current coordination curves for these devices.) If an electronic fuse or backup current-limiting fuse (also referred to as a partial range current-limiting fuse, see ANSI C37.47-1981) is not used, then an instantaneous relay, device 50N, should be used. A special protection concern for high-voltage ground-fault protection is that these faults may involve all three phases before the protective relays can operate.

Low-voltage ground-fault protection can be advantageous in network transformer protection. This is particularly true on 480Y/277 V networks since ground faults are typically low-current, high-resistance arcing faults. These faults can be at or below load current in magnitude and may be intermittent or restriking in nature. The installation of current transformers (CTs) is easier on transformer neutral bushings than on the transformer phases, and of course, fewer in number.

Low-voltage ground-fault devices can be set more sensitively than phase-overcurrent devices. A protective relay connected to a transformer neutral, such as device 151N-T1 in Figure B.1, will detect all the ground-fault current and the unbalanced load current returning to transformer one. It should be set above the maximum unbalanced load that appears as neutral current. As the unbalanced current approaches full-load current, the setting of this device approaches that of a phase overcurrent device, and therefore, becomes less effective.

Another approach for ground-fault current detection is to sense current in the grounding conductor of the transformer, as demonstrated by device 151G-T1 in the Annex B example. Ideally, the only grounds on the low-voltage network system are at the transformers. If this is the case, and if all single-phase load is connected phase-to-neutral, then device 151G-T1 can be set very sensitively since only fault current will be detected. If the neutral is grounded at more than one point as shown in Figure B.1, which is a 1978 and

Copyright © 2002 IEEE. All rights reserved.

Copyright The Institute of Electrical and Electronics Engineers, Inc.
Provided by IHS under license with IEEE
No reproduction or networking permitted without license from IHS
Not for Resale

beyond code requirement (NESC®), then this is not as effective. First, a portion of unbalanced load current may appear in the ground conductor, which requires that the device be set less sensitively. This unbalance can only be reliably determined by test. Second, due to the shunting effect of the multigrounded neutrals, not all of the downstream fault current will return on the transformer neutral grounding conductor. This improves coordination with downstream devices, but also desensitizes the relay. However, for faults in the utility vault, multigrounding of consumer neutrals should have minimal effect, i.e., the 151G-T devices will detect almost all of the ground-fault current.

The last ground-fault detection method shown in Figure B.1 is a transformer case ground device, 64GF. This protection can only be used if the transformer case can be grounded in such a way that all the fault current can pass through the 64GF's CT. This includes isolation from high-voltage cable sheaths, concrete reinforcement bars, etc. Using this protection, all transformer internal faults to ground can be detected quickly.

Special ground-fault protection concerns for network transformers are as follows:

a) Depending on the relay's CT location, multiple ground paths between consumer and utility may shunt some relay current.
b) Transformer neutrals must be isolated from the transformer tank.
c) Faults may involve all three phases before the relays can operate.
d) Relays may have to be set above the maximum unbalanced load current. As a result they may not operate for arcing faults.

Faults on 480Y/277 V collector buses are especially troublesome because of the non-self-clearing nature of faults at this voltage and the extreme insensitivity of the protection otherwise provided for these buses. Low-magnitude burning faults on collector buses will not be detected by supply cable limiters or protector fuses and will burn to destruction. Improved protection of collector buses can be achieved by ground-fault schemes of two general types:

a) By electrical isolation and a single-point grounding of the bus enclosure. A current transformer in the ground lead connects to a sensitive overcurrent scheme, the operation of which is wired to open the protectors on all the transformers supplying the collector bus. This uses the remote trip contacts available on the network protectors and is powered by the building service. Since no current should ever flow in the grounding bond lead of the bus duct enclosure, this scheme can be set very sensitively, responding to ground-fault currents of a few amps.
b) By installing current transformers in the leads of all network transformers and using the residual current to operate an overcurrent relay for each transformer. The overcurrent relay for each transformer operates its associated protector. This scheme is less sensitive than the isolated bus duct described above, but it is easier to construct. It can also detect imbalanced load current and must not operate for it. A setting of 1000 A per residual relay will coordinate with National Electrical Code® (NEC®) required customer ground overcurrent trip devices and will afford improved protection for the collector bus. For enhanced security of service and to avoid unwanted tripping, the overcurrent scheme should operate independently for each transformer supplying the collector bus.

6.1.4 Distance relays

A distance relay that has a separately adjustable phase to phase unit (see Sonnemann, et al. [B22]) can be used to supplement the overcurrent relaying on the substation feeder to supply protection for several network transformers on that feeder. Because the phase-to-phase element exhibits immunity to balanced three-phase load current, it may be possible to detect a bolted phase-to-ground fault on the secondary of the smallest network transformer on the feeder after its network protector has opened.

Precautions to use with this very sensitive setting are as follows:

Copyright © 2002 IEEE. All rights reserved.

Copyright The Institute of Electrical and Electronics Engineers, Inc.
Provided by IHS under license with IEEE
No reproduction or networking permitted without license from IHS Not for Resale

a) Provide sufficient time delay to coordinate with downstream protective devices.
b) Protect for a loss of voltage that may operate the distance relay.

One utility uses a time-overvoltage relay connected phase-to-phase across an open delta voltage transformer with its contact in series with the distance relay contact. Operation of the distance relay energizes the time-overvoltage relay, which then operates to trip the feeder after a time delay. The voltage tap on the time-overvoltage relay is selected so that an operation does not occur if either of the two voltage transformer fuses has blown.

6.1.5 Network protector relays

The typical design for network protector relays has predominantly consisted of two mechanical induction-cup devices. The two electromechanical relays are the network master relay and the network phasing relay. The master relay contains both the *trip* and *close* functions. When the network protector is closed, the master relay closes a trip contact after sensing reverse power flow. The phasing relay supplements the close function of the master relay by only allowing closing of the protector when the transformer secondary voltage leads the network voltage. The master and phasing relays work together to make sure the network voltages are of the right magnitude and the correct phase relationship before allowing the network protector to close. The main problem with this design was that they were not designed to be submersed in water. The most common failure mode for these types of relays is due to humidity and direct water damage.

Another common problem with mechanical relays is that if the protector is not properly pressurized, then the relay contacts may slightly oxidize to the point where the protector may stay closed. If the network protector operates frequently, it is also possible for the contacts to become pitted.

The problems with the electromechanical relays led to a new generation of solid state analog network protector relays. The solid state analog network protector relay is a single relay replacement for both the master and the phasing relay and could be used in the applications where it was fully submersed in water.

The latest network protector relay design is a microprocessor controlled network protector relay. This type is a single relay, three-phase device. The microprocessor design provides added features, such as both remote monitoring capabilities and communications and control functions. The opening and closing of the protector can now be controlled remotely by use of the utility's Energy Management Center Supervisory Control and Data Acquisition (SCADA).

6.2 Mechanical detection of faults

One method for detecting transformer faults other than by electric measurements is by the increase in tank oil or gas pressures caused by internal transformer faults. *Sudden-pressure* relays using this method are valuable for transformers that are not well suited to differential relaying. These relays may be more sensitive for certain internal faults than relays that are dependent upon electrical quantities, and thus can be very valuable in minimizing transformer damage due to internal faults. Sudden-pressure or rapid-pressure rise relays do not require addition of CTs, and some types can be retrofitted on existing network transformers. Some utilities use a separate lockout relay, Device 86, with the sudden-pressure relay to provide redundancy.

Special protection concerns for protecting network transformers with any of the above sudden-pressure relays are as follows:

a) Some types of sudden-pressure relays may operate for close-in through faults. The use of sudden-pressure inhibit schemes may alleviate this problem.
b) Sudden-pressure relays may be subject to misoperation during seismic disturbances. The use of seismic qualified relays may be used to reduce this concern.

Copyright © 2002 IEEE. All rights reserved.

Copyright The Institute of Electrical and Electronics Engineers, Inc.
Provided by IHS under license with IEEE
No reproduction or networking permitted without license from IHS Not for Resale

c) Limited space may make it difficult to add high-side interrupting devices that the mechanical detection devices must operate to clear a faulted transformer off line.

6.2.1 Sudden-pressure relay (gas)

The sudden-pressure relay (gas) is applicable to all gas-cushioned, oil-immersed transformers and is mounted in the region of the gas space. It consists of a pressure-actuated switch, housed in a hermetically sealed case and isolated from the transformer gas space except for a pressure-equalizing orifice.

The relay operates on the difference between the pressure in the gas space of the transformer and the pressure inside the relay. An equalizing orifice tends to equalize these two pressures for slow changes in pressure due to loading and ambient temperature change. However, a more rapid rise in pressure in the gas space of the transformer due to an internal fault results in operation of the relay. High energy arcs evolve a large quantity of gas that operates the relay in a short time. The operating time is longer for low energy arcs.

6.2.2 Sudden-pressure relay (gas/oil)

An available design of the rapid-pressure rise relay utilizes two chambers and two control bellows along with a single sensing bellows. All three bellows have a common interconnecting silicone oil passage with an orifice and ambient temperature compensating assembly inserted at the entrance to one of the two control bellows. Separate versions are available, one for oil pressure and one for gas pressure.

An increase in transformer pressure causes a contraction of the sensing bellows, thus forcing a portion of its silicone oil into the two control bellows and expanding them. An orifice limits the flow of oil into one control bellows to a fixed rate, while there is essentially no restriction to flow into the second control bellows. The two control bellows expand at a uniform rate for gradual rate of rise in pressure, but during high rates of transformer pressure rise, the orifice causes a slower rate of expansion in one bellows relative to the other. The dissimilar expansion rate between the two control bellows will cause a mechanical linkage to actuate the snap-action switch, which initiates proper tripping.

6.3 Thermal detection of faults

6.3.1 Heat detection

One method of detecting arcing faults, which can be very effective, is a heat-sensing system. Arcing faults on the 208Y/120 V systems are of lesser concern because the arc at these voltages is generally self-extinguishing. On the 480Y/277 V system, an arcing fault can be a major problem since the arc tends to sustain itself. Arcing faults are difficult to sense because they are usually of low-magnitude current and are not rapidly cleared by conventional overcurrent devices. The energy in an arcing fault does, however, generate tremendous amounts of heat in an extremely short time. A heat-sensing system located inside network protectors, near bus work, and near cabling, can be used effectively to sense arcing faults. A circuit can be designed that can alarm and trip once an abnormal condition is detected, using heat probes, eutectic tubes, etc. Staged fault tests by one utility, see Griffin, et al. [B7], have demonstrated that these devices operate very quickly, comparable to differential relaying. A special protection concern requires that the heat detection device be positioned close enough to the protected equipment to ensure quick operation for arcing faults.

6.3.2 Smoke detection

Smoke detection can be used to alarm or trip once a situation becomes severe enough to cause combustion and generate sufficient smoke. However, the protection concern of this type of detection system is that it may be too slow to prevent major damage.

--`,,`--`,,`,,`,`,,`---
Copyright © 2002 IEEE. All rights reserved.

Copyright The Institute of Electrical and Electronics Engineers, Inc.
Provided by IHS under license with IEEE
No reproduction or networking permitted without license from IHS
Not for Resale

6.4 Ultraviolet detectors

Ultraviolet detectors have been employed with some success by one utility as a sensitive means of detecting arcing fault conditions within network vaults, see Roop, Vidonic [B17]. Modern ultraviolet detection systems are highly reliable, fast, and flexible due to their use of fiber-optic cables for the signal transmissions. The detectors may be strategically positioned within the vault, on the collector buses, and within the network protector to sense ultraviolet light emanating from the arcing fault.

A typical ultraviolet detection scheme utilizes very sensitive optical detectors that operate for light with a wavelength of between 185–245 nm, which corresponds to the arc and firelight emitted from a fault. Selection of such an operating range provides security against misoperations due to normal switching arc light, as well as sunlight and artificial sources of light, such as incandescent and fluorescent lights. This range does not preclude operation of the scheme in the presence of ultraviolet light, such as that caused by lightning, camera flashes, direct sunlight, and switching arcs in large apparatus.

The arc detector scheme can be made secure against such misoperation by sealing the vault against spurious sources of ultraviolet light, adding time delay, or adding a ground-fault relay to the scheme. A major protection concern of this scheme is that it will not detect faults internal to major equipment, such as transformers and network protectors, until the fault becomes externally visible.

7. High-voltage, fault-interrupting devices

The function of a protective device applied on the primary side of a network transformer is, in general, to provide system protection as well as transformer protection. With respect to system protection, the primary-side protective device should interrupt a potentially damaging overcurrent condition and operate promptly to isolate only the faulted segment, thereby minimizing the stresses on the remainder of the system and limiting the extent of the service interruption. For transformer protection, the primary-side protective device should operate promptly in response to a fault located between the protective device and the transformer. It should further provide backup protection for the transformer in the event the low-voltage network protector or other secondary-side protective device fails to operate properly. Some applicable devices are circuit breakers, vacuum fault interrupters, and fuses. This clause will describe the presently available power equipment used for fault current interruption and then discuss some application and coordination considerations of each type of device. See Annex C for devices under development.

7.1 Circuit breakers

The conventional circuit breaker equipped with time and instantaneous overcurrent relays can be used to provide phase and ground-fault detection. In addition, the breaker can be remotely tripped, thus providing protection and isolation for externally detected faults (Clause 6). Applications of circuit breakers located at the network transformers have been limited due to the relatively high cost of a breaker and its large size, which frequently cannot be accommodated in a vault. The use of vacuum fault interrupters may overcome the size problem.

7.2 Remotely located circuit breakers with transfer tripping

Circuit breakers remote from the network vault equipped with phase and ground overcurrent relays set to coordinate with network transformer secondary faults are used successfully to isolate a transformer faulted within its high-side switch compartment or primary winding. If secondary winding, protector, and low-voltage bus faults require tripping of the remote circuit breaker, then transfer tripping is required.

Copyright © 2002 IEEE. All rights reserved.

Copyright The Institute of Electrical and Electronics Engineers, Inc.
Provided by IHS under license with IEEE
No reproduction or networking permitted without license from IHS Not for Resale

The installation of transfer trip equipment, transmitter and receiver, is not itself difficult or particularly expensive. The installation of a communication link, however, can be a problem. Difficulties include

a) Insufficient duct space to pull all the needed communications cables to the remote substation(s)
b) Susceptibility of metallic pairs to induction problems caused by close proximity to the power cables.

One option may be to install fiber-optic cables. By multiplexing signals, the number of communication cables that need to go back to the remote substation(s) would be reduced. Also, fiber-optic cable could be put into the same ducts as the power cables, since it would not be affected by proximity to the power cables.

7.3 Fault interrupters

The development of the vacuum fault interrupter has led to the introduction of a new generation of fault-interrupting devices. Interrupting fault current in a vacuum has found application not only in conventional circuit breakers, but has led to development of the vacuum fault interrupter, which is typically a single-shot device without automatic reclosing capabilities. Since automatic reclosing is normally not required for transformer protection, this concept allows design of a protective device providing smaller size, lower cost, and simpler operation. The smaller size and simplicity of operation allows a submersible type of construction.

Vacuum fault interrupters utilize short operating strokes; thus a smaller operating mechanism is required. The insulating medium surrounding the vacuum interrupter can be solid, air, SF_6 gas, or conventional transformer oil. It should also be noted that in some vacuum interrupter designs, a special external encapsulation process is applied to enhance the external dielectric performance, particularly for applications requiring high BIL ratings or operation at high altitude. Interruption in vacuum also results in a quiet operation ideal for a vault-type installation. Vacuum fault interrupters are small in size, lightweight, and can be mounted on the floor, wall, and even the ceiling of the transformer vault. Conventional phase and ground overcurrent sensing and tripping can be provided by electromechanical relays or static overcurrent trip devices. In addition, the vacuum fault interrupters can be remotely tripped from external protective devices (Clause 6). Their fast operation (approximately 2 cycles) at the higher fault currents reduces damage.

Other interrupting devices that exhibit the same desirable qualities as vacuum fault interrupters are becoming available. For example, SF_6 fault interrupters are becoming available, which offer similar advantages of small size, low cost, excellent switching and fault-interrupting performance, and oil less construction. These automatic fault interrupters are designed and manufactured in accordance with IEEE Std C37.60-1981.

7.4 Power fuses and current-limiting fuses

Power fuses are commonly used for protection of outdoor distribution and substation transformers, and they can be applied for network transformer protection as well, because of their fast response characteristics at high-fault currents and minimal maintenance. There are two basic types of power fuses: solid material fuses and current-limiting fuses. Although solid material power fuses can typically be selected to have smaller ampere ratings than similarly applied current-limiting fuses, they may not be appropriate for network transformer protection application where current limitation to prevent tank rupture is desired. Current-limiting fuses are advantageous in network transformer protection applications, since they clear high magnitude faults completely within the first one-half cycle, limiting peak current and I^2t let-through to less than the circuit would deliver if either solid material power fuses or circuit breakers were used.

Another type of power fuse, the electronic fuse, combines many of the features and benefits of both types of power fuses and even relays, see Glenn [B6]. The electronic fuse has a 600 A continuous rating and can interrupt 40 kA. The electronic fuse consists of two separate components: an electronic control module that provides the time-current characteristics and the energy to initiate tripping; and an interrupting module that

Copyright © 2002 IEEE. All rights reserved.

Copyright The Institute of Electrical and Electronics Engineers, Inc.
Provided by IHS under license with IEEE
No reproduction or networking permitted without license from IHS Not for Resale

interrupts the current when a fault occurs. These two modules, when joined together, fit in a suitable mounting. A CT powers two types of logic circuits employed in the control module—one with instantaneous tripping characteristics and one with time-delay tripping characteristics. These two circuits may be used alone or in combination to provide a variety of time-current characteristics. When a fault occurs, the control module triggers a high-speed gas generator that separates the main current path in the interrupting module, transferring the current into the current-interrupting ribbon elements, which then melt and burn back.

The most important principle to be considered when selecting a transformer primary fuse is that it must protect the transformer against damage from mechanical and thermal stresses resulting from through faults that are not promptly interrupted. A properly selected fuse will clear such faults before the magnitude and duration of the overcurrent exceeds the short-time loading limits recommended by the transformer manufacturer. In the absence of specific information applicable to an individual transformer, the primary fuse should be selected in accordance with recognized guidelines for the maximum permissible transformer through-fault current duration limits. Curves representing these limits and information pertaining to their use can be found in IEEE Std C57.109-1993 and IEEE Std 80-2000.

Besides selecting a transformer primary fuse to maximize protection for the transformer, it is also important for the time-current characteristics of the transformer primary fuse to be coordinated with the time-current characteristics of certain other overcurrent protective devices on both the secondary side and the primary side of the transformer. Annex B illustrates typical coordinated network installations.

There are a number of items that need to be considered when applying fuses to network transformers:

a) Since fuses are typically sized to carry phase currents, including single contingency overloads, they will probably not respond very quickly to low-magnitude ground faults. This lack of ground-fault sensitivity may create difficulties when coordinating fuses with other protective devices that utilize such sensing.
b) Since fuses are single-phase devices, operation of a single fuse can result in a single-phase condition of the transformer. Relays are available, however, that can detect this condition and initiate remote tripping of a three-phase switching device after a time delay measured in seconds. The device, 51/46 in Annex B, is such a relay.
c) In below-grade street vaults, care should be used to preserve the submersibility of these units.
d) Any form of localized time-overcurrent protection or fusing must coordinate with the network transformer low-side fuse links or current-limiting fuses.
e) If high-side current-limiting fuses are to be applied to reduce the risk of tank rupture, they must be conservatively sized to account for all transformer vault emergency loading situations, cold load pickup, and transformer inrush.

Generally, application of current-limiting fuses to network transformer protection should be restricted to partial range (backup) fuses capable of current-limiting only for high-side, high-current faults. (See IEEE Std 142-1991 for the definition of this device.) In this mode of operation, the user gains speed in high-current clearing from the high-voltage feeder side of the fault. However, high current will continue to flow from the low-voltage side after one fuse melts even for single, phase-to-ground faults with a delta high-side connection. Watt-type protector relays may respond slowly or not at all due to the operation of a high-side fuse for a transformer fault. As a result, a three-phase opening device on the primary should be used in conjunction with partial range current-limiting fuses.

Fuses are designed and manufactured in accordance with IEEE Std C37.41-2000 and ANSI C37.42-1996.

Copyright © 2002 IEEE. All rights reserved.

Copyright The Institute of Electrical and Electronics Engineers, Inc.
Provided by IHS under license with IEEE
No reproduction or networking permitted without license from IHS Not for Resale

8. Low-voltage, fault-interrupting devices

8.1 Network protector

The switching device between each network transformer low-voltage bushing and the network is the *network protector.* A secondary network protector consists of an electrically operated, low-voltage air circuit breaker and network relays with associated equipment for automatic circuit breaker control. A network protector may be flange mounted directly on the network transformer low-voltage terminals or may be separately mounted.

Network protectors are available in submersible enclosures for installation in underground vaults or in nonsubmersible enclosures where no possibility of flooding occurs. They are available in continuous current ratings for use with network transformers ranging from 225 kVA to 2500 kVA and for network voltages of 208Y/120 V, 480Y/277 V, or 600Y/347 V. Network protectors are rated to interrupt low-voltage fault current and are designed and manufactured according to IEEE Std C57.12.44-2000.

8.2 Low-voltage fuses

Fuses are usually installed at the output terminals of the network protector to provide *backup* protection for the protector breaker. The fuses should not blow on a primary feeder fault before the network relays trip the protector. If the protector breaker fails to open for a fault on the primary feeder cable, the protector fuse should be coordinated to blow before the overcurrent relays on the other primary feeders supplying the network can operate (assuming the remote feeder relays can see the fault). If this is not possible, then additional protection should be considered.

Network protector fuses are commonly available in two styles: either a low-voltage fuse link or a low-voltage current-limiting fuse. The fuse link is either a copper fuse or an alloy fuse and is located either within the network protector enclosure, on the load side of the main contacts, or mounted externally above the protector. If they are located within the protector enclosure, they can contribute significantly to the heat within the enclosure and could limit the ability of the protector to carry emergency loads, such as would be the case if one or more transformers supplying power to the bus were out of service. The alloy fuse link characteristic varies widely with load and ambient temperature. There have been instances where these devices have not melted for arcing faults within the protector.

The second type of fuse commonly used with network protectors is the low-voltage, current-limiting fuse. It is especially applicable on 480 V networks because its arc products are completely confined within its tube. It is sensitive to temperature and therefore is mounted in housing separate from the network protector enclosure. At low levels of overcurrent, these devices may become damaged without complete melting. Subsequent transformer loading can then cause them to overheat, open, or catch on fire. A new version of the current-limiting fuse that is electronic is now available as a replacement for the Y-link device. It is triggerable and thus could be initiated by the network protector lockout relay, which in turn was triggered by the protector heat probes. The advantage of such a device is that the faulted protector could be isolated from the 480 V bus without the need to trip any other transformer protectors supplying the bus. If the involved transformer had a high-side interrupting device, then it could be completely isolated inside the vault for a network protector fault without the need to drop network load.

9. Distributed source generation

A network protector device should not be used as a separation device between a constant frequency network system and a distributed source of generation. Network protectors were not designed or tested to handle the recovery voltages involved when interrupting load currents or fault currents between two points that are not

Copyright © 2002 IEEE. All rights reserved.

Copyright The Institute of Electrical and Electronics Engineers, Inc.
Provided by IHS under license with IEEE
No reproduction or networking permitted without license from IHS Not for Resale

locked together in synchronism. A review of IEEE Std C37.13-1990, ANSI C37.16-1997, IEEE Std C37.20.1-1993, IEEE Std C37.29-1981, ANSI C37.50-1989, ANSI C37.51-1989, and IEEE Std C57.12.44-2000 was made to check for wording related to generator usage. Only IEEE Std C37.13-1990 and IEEE Std C37.29-1981 had wording specifically aimed at using generators with circuit breakers. IEEE Std C57.12.44-2000 is specifically for network protectors and the case may be made that the network protectors should be tested to the same standards as circuit breakers for generator operation. No evidence indicates that to be the case. The power factors used for the test circuits are not the same.

Utility consumers with noninterruptible loads (e.g., broadcast stations, telephone companies, and hospitals) have applied to utilities for permission to attach their own emergency generators to distribution networks by using make-before-break (closed-transition) transfer switches. Such transfer switches would permit periodic testing of emergency generators and their intended loads, without interrupting that load. Other utility consumers have requested their peak shaving generators be allowed on a network protected system. This testing duty or daily use would subject network protectors on the network to potential reverse power conditions, for which they are not designed. Network protectors are designed to interrupt fault current flow to a feeder fault from the low-voltage network, but are not designed to separate two dynamic systems—utility- and consumer-owned generation. Network protectors with transient voltage rating sufficient to withstand separation of two dynamic systems are generally not available.

Network protectors could be forced to operate more times than designed as the on-site generation responds to the varying load. It is possible that the generator controls may not respond quickly enough to changing load patterns and allow power to flow in a reverse direction out onto the power supply such that the protector opens. Thus, it is possible that the protector may be standing open for long periods of time. Should a generator fail during this time frame, then the consumer could be de-energized until the network protector closes back in. Consumers with noninterruptible loads would thus be affected greatly.

Phase and voltage differences between utility network and consumer generation may cause network protectors to open when they cannot interrupt current flow, or when large voltage or phase angle differences can arise, resulting in failure. Such incidents have occurred.

Generally, utility practice is to disallow such closed-transition transfers, when network protectors may operate as a result of the transfer.

Network protector testing and qualification is for network circuits with X/R ratios between 5 and 7, whereas when applied to generator circuit applications, the circuit X/R ratio may typically be in excess of 20. This has the effect of substantially increasing the dielectric stresses during circuit interruptions, which will expose the network protector to voltages beyond its rated limits. Therefore, no transition should be allowed unless the consumer's generator output matches the utility voltage in both phase and magnitude, and even then, the transition must be kept substantially shorter than the 0.05 s operating time of most network protector relays. A manufacturer recommends against closed-transition transfers.

A battery-based uninterruptible power supply, if implemented to carry consumer load during an open-transition transfer for periodic testing, would also be available to carry load in the event of failure of the utility network and subsequent startup of consumer emergency generation, thus improving reliability of consumer emergency generator backed-up power supply overall.

For cases where distributed generation is connected in parallel with a network system, appropriately rated interrupting devices built per circuit breaker standards with full duty interrupting current and voltage ratings should be utilized at all places between the distributed generation and the utility's high-voltage cable. These interrupting devices may require a relay and control battery or capacitor trip device. The duty of standard network protectors is not adequate for placement in systems with energy sources connected on what is normally their *load side.*

Copyright © 2002 IEEE. All rights reserved.

Copyright The Institute of Electrical and Electronics Engineers, Inc.
Provided by IHS under license with IEEE
No reproduction or networking permitted without license from IHS Not for Resale

10. Network distribution SCADA

As has been stated, underground grid and spot-network systems offer much greater reliability than other commonly used distribution systems. Because a network system is designed for maximum service reliability, maintaining power to consumers, even if one of its primary feeders or transformers fails, there is no obvious indication either to the consumer or utility that there is a malfunction. There is a need to prevent total network shutdown from secondary faults, to prevent a catastrophic failure in a building vault, and to minimize damage to consumer and utility facilities. Until SCADA systems became practical, periodic visual inspections were required, as well as preventive maintenance, to detect incipient failures. Practically speaking, inspections cannot be frequent enough to detect defective equipment. Besides the relaying, sudden pressure relays, and other automatic protection schemes described elsewhere, active remote monitoring of the system is a method that should be considered. It has been demonstrated that SCADA systems can be used to monitor networks to ensure that their inherent reliability does not become a significant risk factor (see Landman, Louie [B13]).

Copyright © 2002 IEEE. All rights reserved.

Copyright The Institute of Electrical and Electronics Engineers, Inc.
Provided by IHS under license with IEEE
No reproduction or networking permitted without license from IHS Not for Resale

Annex A

(informative)

Response of network relays to system faults

A.1 Tripping characteristics

If a fault occurs on the primary feeder, and/or if there is a power reversal from the network to the primary system, the network protector opens automatically. Figure A.1 shows that when the station breaker is opened to isolate a feeder, the current from the network may be either exciting current or exciting current plus charging current. The exciting current will be relatively small and will lag the reversed network voltage phasor by an angle in the order of 65° to 80°. Cable charging currents may be quite large, particularly for the higher feeder voltages, and the net current may lead the reversed network voltage phasor by an angle of 85° or more. The watt relay characteristic is designed so that the relay will trip for either of these conditions. Charging current should not exceed 250% of the protector rating, as the protector may not detect this high magnitude leading current due to current transformer saturation.

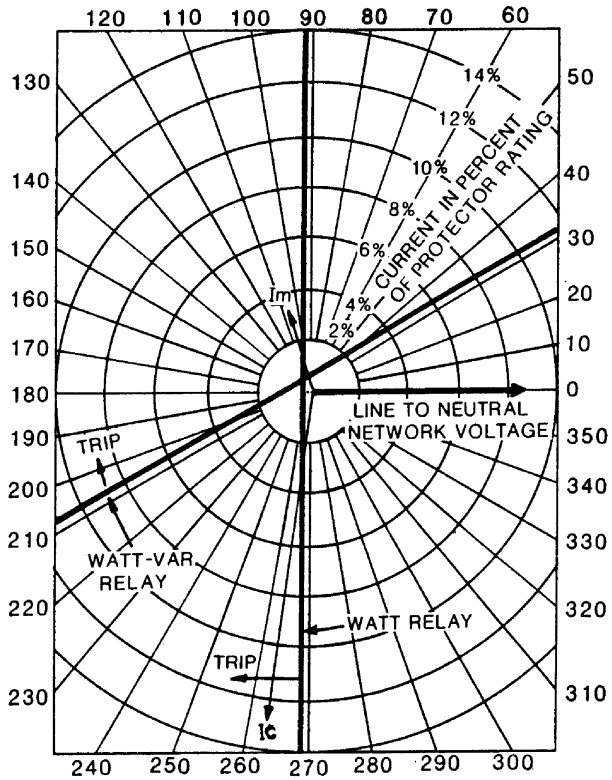

Figure A.1—Typical tripping characteristics of master relay

A.2 Balanced faults

Primary feeder three-phase faults will produce short-circuit currents on each phase. Since this phasor falls within the trip area of the master relay, the relay will open the network protector. Short-circuit currents

Copyright © 2002 IEEE. All rights reserved.

Copyright The Institute of Electrical and Electronics Engineers, Inc.
Provided by IHS under license with IEEE
No reproduction or networking permitted without license from IHS
Not for Resale

caused by three-phase or single-phase faults on the secondary grid fall on the right side of the relay characteristic and do not cause the protector to be tripped.

A.3 Tripping operations on unbalanced faults

If the primary winding of the transformer is connected in delta and if no other sources of zero-sequence current are connected to the line, fault current will not be supplied from the network for a line-to-ground fault on the high-voltage feeder after the feeder breaker opens. If the station breaker clears for such a fault, the network then backfeeds into the transformer the exciting current of the transformer plus an unbalanced charging current because of the grounded conductor. Net power flow is out of the network and the master relay will operate to trip the protector. If the transformer primary should be connected in grounded wye, the master relay will receive this fault current and will trip the protector, if net power flow is out of the network.

If high-side fuses are provided for the transformers of a grid network, high-current faults in the high-voltage winding or cable on the load side of the fuses will usually cause the feeder to trip even though one or more fuses may melt. The standard watt characteristic network master relay will then operate to open the network protector from the transformer-exciting current or cable-charging current.

Spot networks may be served from nondedicated feeders, which also serve other loads. Fuses may be installed at the primary terminals of the network transformers to prevent lockout of the feeder for a network transformer fault and avoid interruption to the other loads. Where high-fault currents are available, the fuses may clear severe faults on the transformer primary leads faster than the feeder breaker, limiting the energy to such a fault. After the feeder breaker opens, the standard watt characteristic network master relay will open the network protector due to the reverse power flow to the other loads (with one fuse blown) and exciting current.

If, however, the fuse clears a single, phase-to-ground fault on the transformer leads or in the high-voltage winding without tripping the feeder breaker, the unfaulted phases may still supply power to the network. The net three-phase power flow in the network protector may not be in the reverse direction and may not operate the watt-connected master relay. However, the reactive flow in the network protector will be in the reverse direction. A protector master relay connected to provide watt-var characteristics, so that maximum torque occurs when the current leads the network line-to-neutral voltage by 120°, will operate for this condition. The tripping characteristic is shown in Figure A.1.

A second reason for recommending the watt-var relay for the spot-network protector when the transformer primary is fused is to obtain faster protector operation for faults on the primary feeder. This may avoid possible fuse blowing from the network backfeed. The watt-var characteristic network master relay develops more torque and will operate faster than the watt-connected relay for the inductive flow to feeder faults.

It should be noted that the watt-var relay will not operate on the capacitive charging current of the primary cable when the feeder breaker has been opened in the absence of a fault, but requires the inductive load flow to the other connected loads to operate. If the spot-network nondedicated primary feeder is largely overhead, the load flow would be primarily inductive unless the feeder was overcompensated with shunt capacitors for power factor correction. Under fault conditions, either multi or single phase, the newer microprocessor relays can trip successfully, whereas the older analog or electromechanical relays would not respond to the highly capacitive backfeed circuits.

New developments include a master relay that exhibits watt characteristics at the low transformer-exciting or cable-charging current levels and watt-var characteristics at the higher fault current levels.

Copyright © 2002 IEEE. All rights reserved.

Copyright The Institute of Electrical and Electronics Engineers, Inc.
Provided by IHS under license with IEEE
No reproduction or networking permitted without license from IHS Not for Resale

A.4 Reclosing characteristics

The master relay recloses an open protector when normal conditions return on the high-voltage feeder.

A typical closing characteristic of a network master relay is shown in Figure A.2. If the voltage difference phasor terminates to the right of the master relay close characteristic, the relay will operate its closing contacts and the network protector will close if the phasing relay close contacts are also closed. If the transformer voltage is low enough to cause the difference phasor to terminate to the left of the relay characteristic, the protector will remain open.

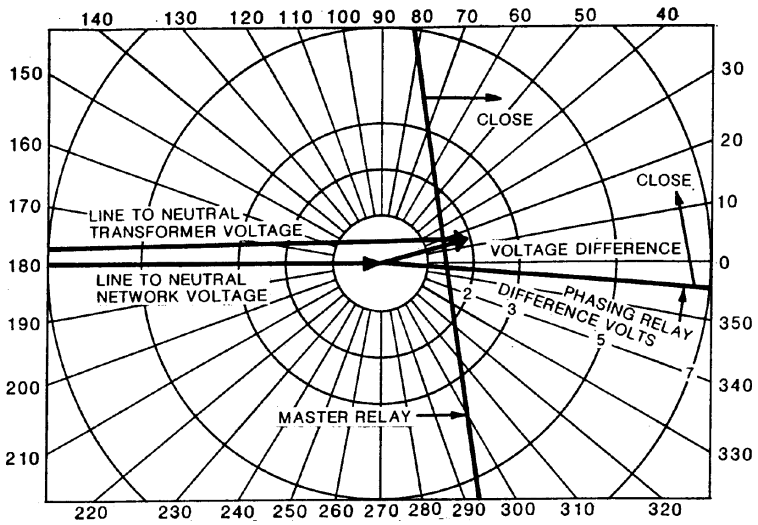

Figure A.2—Typical closing characteristics of master and phasing relays

The relay characteristic is normally spaced away from the tip of the network voltage phasor by a relay setting of 1.5 V in 208Y/120 V systems, which is referred to as the master relay close setting. The corresponding setting in a 480Y/277 V system is 3.4 V at 0°.

The characteristic shown is for one phase of a three-phase system. All three phases have identical characteristics.

If the re-energized transformer voltage should lag the network voltage, reclosing would cause power flow into the transformer and immediate tripping. To avoid this, a network phasing relay (device 60 in Figure 1) is used with the master relay to permit reclosing only when the voltage conditions will cause power flow into the secondary network.

Copyright © 2002 IEEE. All rights reserved.

Copyright The Institute of Electrical and Electronics Engineers, Inc.
Provided by IHS under license with IEEE
No reproduction or networking permitted without license from IHS
Not for Resale

Annex B

(informative)

Example: 12.5 kV/480Y/277 V spot vault network transformer protection

Engineers designing spot networks may choose to select from the following or other protection options depending upon characteristics of their utility's system and other aspects of their particular application. The example vault shown in Figure B.1 is in a subbasement of a high-rise office building. For example purposes, a number of protection devices are used. The vault contains 4–2500 kVA transformers connected delta on the 12.5 kV primary side and wye-grounded on the 480Y/277 V secondary, with 7% impedance. This vault is fed from a major substation that supplies a portion of a central business district. Each spot-network transformer is radially supplied from an underground 12.5 kV cable. Maximum three-phase fault current that must be interrupted by any one 12.5 kV device in the vault is 8500 A (point 2 on Figure B.2). Bolted three-phase 480 V bus fault current is 130 000 A. The transformers are networked on the low side through 3000 A network protectors and Y-50 externally mounted fusible links. Conventional watt-type master relays and phasing relays are used. On the high side of the transformer there is a three-position switch whose insulating liquid-filled compartment is bolted to the transformer tank. This switch is used to interrupt transformer magnetizing current, when the switch is opened to de-energize the transformer, to energize the transformer, and to ground the 12.5 kV cable. For simplicity, Figure B.1 shows only two of the four transformers; all transformers are protected identically. Figures B.2 and B.3 present the coordination of the current sensing protective devices for transformer 1.

Protection of this vault starts with the addition of a three-phase vacuum fault interrupter. This device weighs about 115 kg and is approximately 50 cm × 60 cm × 120 cm. The vacuum bottles are encapsulated in epoxy, which allows for this rather compact design. The cable and transformer connections to the interrupter are to be made using conventional 600 A elbow-type connectors. The interrupter has a 12 000 A (symmetrical) interrupting capability and a minimum total clearing time of about 2 cycles. Line currents are sensed by encapsulated bushing CTs. Control operation power is obtained from the CTs, so no additional power source is required for tripping or for overcurrent relaying. The interrupter opens and closes by stored-spring energy. Spring charging is done automatically via 120 V ac motor or manually after an opening operation. Standard phase and ground overcurrent devices are used with inverse time and definite time characteristics, respectively, and are designated as devices 51-T1 and 51N-T1 for transformer 1 in Figure B.1. These devices trip transformer 1 vacuum interrupter directly, and a 52b contact of the interrupter then initiates a trip of the protector. This provides backup clearing in the event of a control power failure or lockout relay failure.

In series with the three-phase interrupter are interrupting devices known as *electronic fuses.* These single-phase devices interrupt fault currents above 2001 A in about 0.25 cycle. This feature limits energy and thereby minimizes the possibility of tank rupture. In the nonlimiting region, above 400 A but less than 2001 A, it has a time-current tripping characteristic that coordinates with the feeder time inverse overcurrent device; see Figure B.2. The _ cycle operating time of this device is too fast for the overcurrent elements to detect and trip the three-phase interrupter, and therefore, it is possible that one or more fuses may be left intact following the interruption of the major fault current for a transformer primary winding fault. Since this condition may cause smoke and arcing to continue, an open phase detector, device 51/48, has been added.

Copyright © 2002 IEEE. All rights reserved.

Copyright The Institute of Electrical and Electronics Engineers, Inc.
Provided by IHS under license with IEEE
No reproduction or networking permitted without license from IHS
Not for Resale

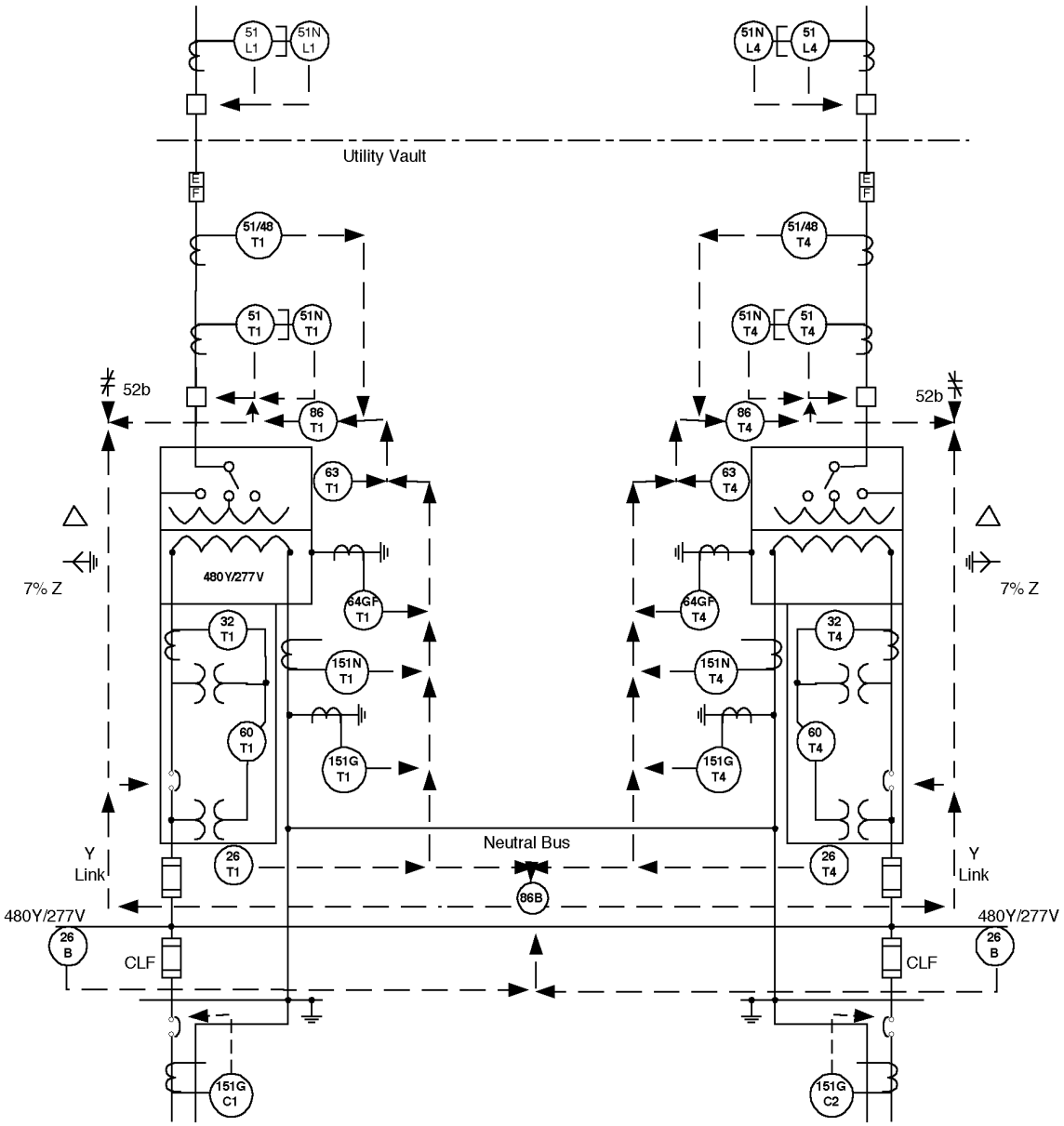

Figure B.1—Example of network transformer vault protection scheme

Referring to transformer 1 in Figure B.1, a sudden-pressure relay, device 63T1, is mounted on one of two transformer access ports, which trips via the transformer lockout relay, device 86T1. A 450 °F bimetallic heat probe, device 26T1, is inserted through the protector casing to detect protector faults. Heat probes are also placed in close proximity to the 480 V utility bus for bus fault detection. Operation of a transformer protector heat probe trips lockout relay device 86T1 and the bus lockout relay, device 86B. Operation of a bus heat probe trips the bus lockout relay. Control dc is supplied by the parallel summation of three individually charged capacitors, which in turn are supplied with half-wave rectified voltage from the 480Y/277 V ac bus. One power supply is provided for each lockout relay. A loss of any two phases does not constitute a loss of dc supply. An open or short on all three phases allows one lockout relay operation. Silver-in-sand current-limiting fuses are placed in series with the 480 V supply cables to the consumer switchgear. Each supply from the vault consists of 4–500 kcmil cables in parallel per phase. The low-voltage 500 kcmil cable limiter fuse curve shown in Figure B.3 is assumed to be the sum of four identical cable limiter fuse curves.

Copyright © 2002 IEEE. All rights reserved.

Copyright The Institute of Electrical and Electronics Engineers, Inc.
Provided by IHS under license with IEEE
No reproduction or networking permitted without license from IHS
Not for Resale

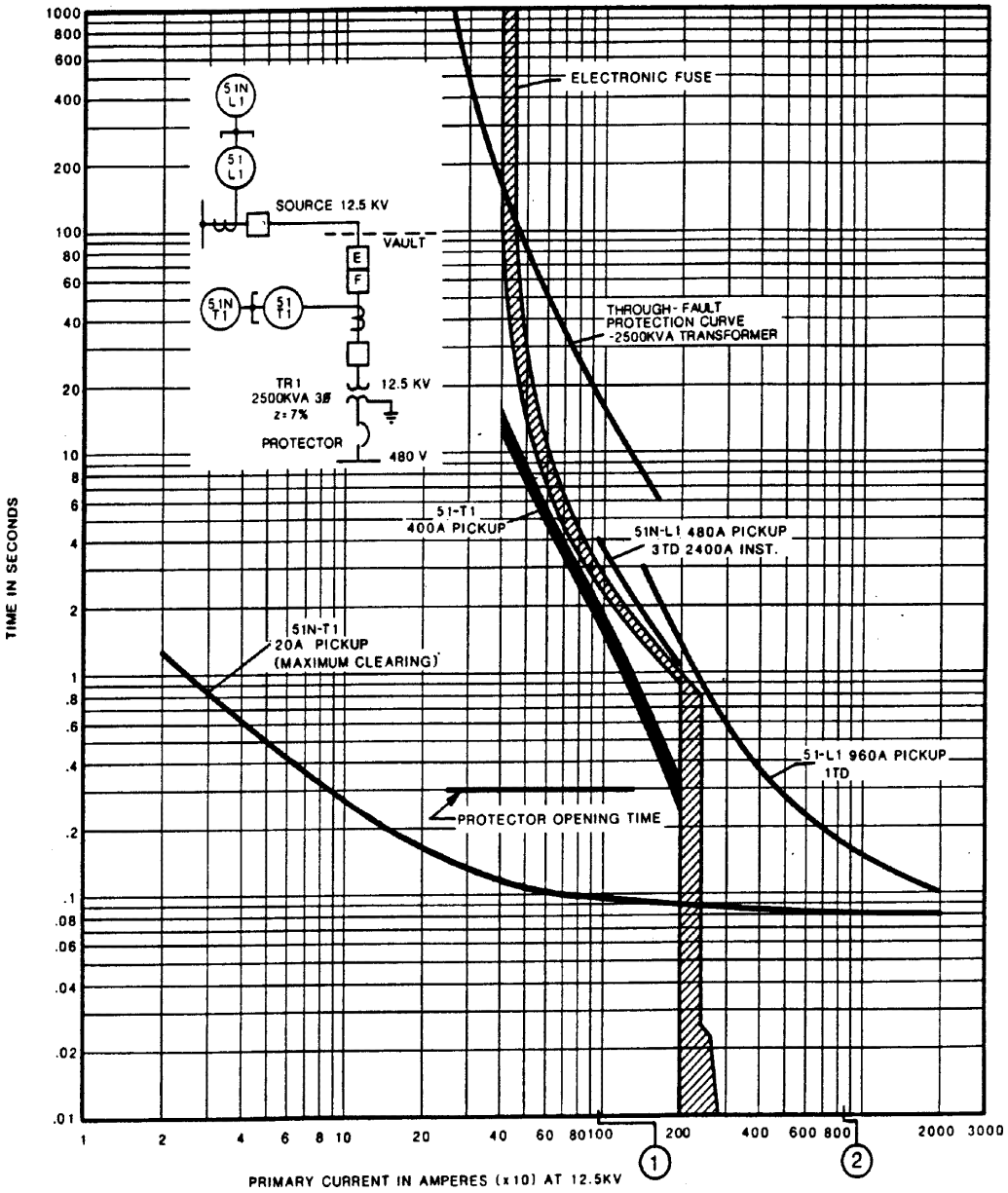

Figure B.2—High-voltage coordination

For multiphase faults within the transformer high-side windings, the electronic fuse(s) will operate in about 0.25 cycle if the phase current is greater than 2001 A. If the phase current for a multiphase fault is less than 2001 A, then the phase overcurrent protection, device 51T1, will operate if properly coordinated before the feeder relays, devices 51-L1. For phase-to-ground faults within the transformer windings, the electronic fuse will operate for faults with the phase current greater than 2001 A and device 51N-T1 will operate before the feeder relays, device 51N-L1. Note, the time-overcurrent portion of the electronic fuse provides backup for devices 51-T1 and 51N-T1.

Copyright © 2002 IEEE. All rights reserved.

Copyright The Institute of Electrical and Electronics Engineers, Inc.
Provided by IHS under license with IEEE
No reproduction or networking permitted without license from IHS
Not for Resale

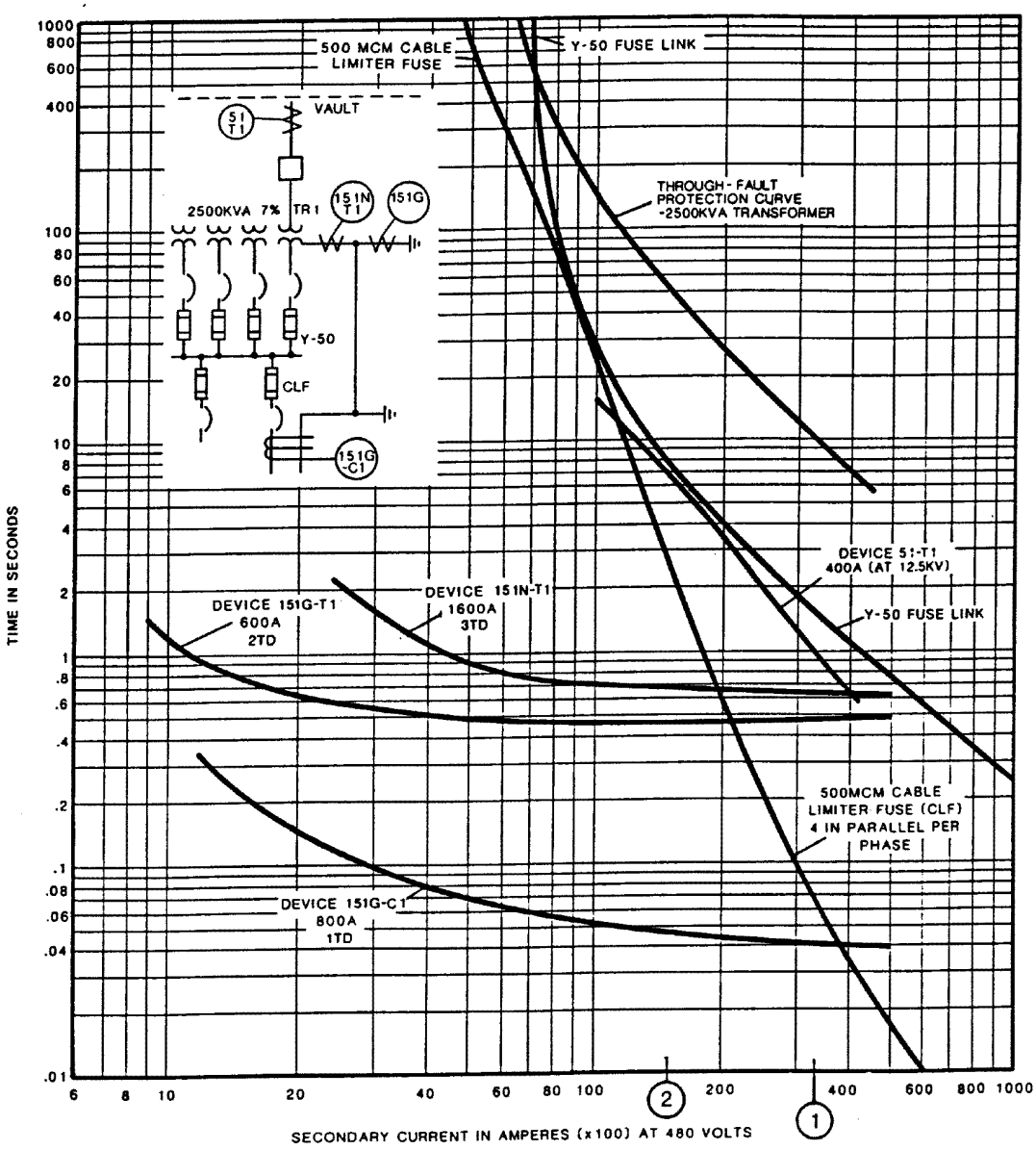

Figure B.3—Low-voltage coordination

For example purposes, three overcurrent ground relays are used for transformer 1 (151N-T1, 151G-T1, and 64GF-T1 in Figure B.1) for low-voltage ground-fault protection. The 151N-T1 device must be set above the maximum phase-to-neutral unbalanced load current. The 151G-T1 overcurrent device does not sense the entire unbalanced load current, and therefore, can be set more sensitively than the 151N-T1 device. Test measurements should be made to determine this division of load current. For any ground faults not involving a neutral conductor or bus, the 151G device should see the same proportion of total ground-fault current returning to its respective transformer as unbalanced load current. (See 6.1.3.) Note the suffix “G” is preferred over “N” to denote that the purpose of the circuit is to detect fault current in a ground path. The suffix “N” is preferred in the secondary neutral of current transformers or in the secondary of a CT whose primary winding is located in the neutral of a power transformer or machine (ANSI C37.16-1997). See Figure B.3 for the time-current coordination of these devices, including the consumer’s downstream ground

Copyright © 2002 IEEE. All rights reserved.

Copyright The Institute of Electrical and Electronics Engineers, Inc.
Provided by IHS under license with IEEE
No reproduction or networking permitted without license from IHS
Not for Resale

sensor relay, device 151G-C1. To apply these relays securely, the transformer neutral bushing should be isolated electrically from the transformer tank. The 64GF-T1 device is a case ground or point ground protective device. If the transformer and protector can be insulated from ground, then this very sensitive instantaneous acting relay can be used to detect only transformer and protector faults involving the case. Coordination is not necessary with downstream devices, since the 64GF-T1 will not operate. Point 1 on Figure B.3 represents the maximum low-voltage three-phase bus fault current contributed by one transformer expressed in amps at 480 V. Point 2 represents a likely value for the maximum transformer fault current in the presence of a 480 V arc. Each transformer is assumed to supply one-fourth of this total 480 V bus fault current. See Dunki-Jacobs [B3] for an explanation of the magnitude of arcing current.

For faults located within a transformer low-voltage winding, between the low-voltage winding and its protector, or in a protector, four units of current will flow—one from each of the unfaulted transformers as well as one from the faulted transformer. The Y-50 fuse link for the faulted transformer will detect three of these units of current. However, if the fault is high-resistance arcing and low in current magnitude, then even three units of current will not be enough to properly melt the Y-50 links. For example, if this type of fault was in the network protector, then heat detectors, device 26T1, are needed. The higher the current, the more efficient the operation of the Y-link. The maximum current for a bolted fault would be three times 32 500 A, or 97 500 A for this example. The Y-50 link would approach 0.2 s in clearing time.

Table B.1—NOTES for Figure B.1– Figure B.3

Device No.[a] **(includes suffixes)**	**Function (location)**
51-L1, L4	Time-overcurrent (line)
51N-L1, L4	Neutral time-overcurrent (line)
51-T1, T4	Time-overcurrent (transformer)
51N-T1, T4	Neutral time-overcurrent (transformer)
51/46-T1, T4	Open phase following high current (transformer)
86-T1, T4	Lockout relay (transformer)
63-T1, T4	Sudden gas pressure (transformer)
64GF-T1, T4	Case ground fault
151G-T1, T4	Low-voltage ground time-overcurrent (transformer)
151N-T1, T4	Low-voltage neutral time-overcurrent (transformer)
26-T1, T4	Heat detector (transformer)
32-T1, T4	Master (reverse power) (transformer network protector)
60-T1, T4	Phasing (voltage balance) (transformer network protector)
151G-C1, C2	Ground time-overcurrent (consumer)
E-F	Electronic fuse (transformer)
Y-link	Low-voltage fusible link (transformer)
CLF	Low-voltage current-limiting fuse (consumer)
26-B	Heat detector (bus)
86-B	Lockout relay (bus)

[a]Suffix letters denote the location of the device in the circuit. See IEEE Std C37.2-1996 for a complete listing of device function numbers.

Copyright © 2002 IEEE. All rights reserved.

Copyright The Institute of Electrical and Electronics Engineers, Inc.
Provided by IHS under license with IEEE
No reproduction or networking permitted without license from IHS Not for Resale

Annex C

(normative)

Other concepts being investigated

C.1 Low-voltage arcing fault detection

A utility and a manufacturer of network protectors are jointly working on a project to determine the applicability of undervoltage and lower order harmonic voltage sensing of 480Y/277 V arcing network vault faults. Field test data during normal vault operation and laboratory staged fault tests are being analyzed to determine voltage relay applicability. It appears that an undervoltage device using conventional components can be set to distinguish a 480 V fault from normal system operation. Lower order harmonics appear to be the most practical component of bus voltage to detect during an arcing fault, other than the fundamental frequency component. Both devices should be easy to install and maintain. Both devices are nonselective and would, therefore, require time delay to coordinate with consumer protection, network protectors, and fuse links.

C.2 Microprocessor-based current differential relays

Future current differential relays may be developed that overcome the lack of local high-side current transformers by utilizing fiber-optic channels. It would be possible to use magnetic optic current transducers located at the source stations in conjunction with the local low-side current transformers if such a relay existed that allowed optical or traditional wiring for the current transformer connections. The use of the fiber-optic channel would also allow transfer trip signals to be sent to the source station circuit breakers.

C.3 Current-limiting fuses and three-phase load-break switch

For those network installations where current limitation is important (usually because of very high available fault currents), another device is being developed that combines current-limiting fuses and a gang-operated, three-phase load-break switch.

For all fault currents above the interrupting rating of the load-break switch, the current-limiting fuses will operate to clear the one-, two-, or three-phase fault, resulting in a minimal level of energy into the fault arc. This is especially important where the network transformers use flammable conventional transformer oil. Depending on the actual fuses used, I^2t can be limited to values as low as 500 000 A^2 s or less.

To eliminate any possibility of ferroresonance if only one or two fuses operate, the fuses are equipped with a *striker* mechanism that will operate to trip the three-phase load-break switch whenever any fuse operates.

This mode of operation can eliminate the unnecessary blowing of fuses on unfaulted phases and provide the benefit of three-phase disconnection of the transformer for any fault. The switch can be equipped with phase and ground overcurrent electronic controls for detection of low-magnitude faults and can be tripped by remote signals, such as from sudden-pressure relays or heat probes located elsewhere in the network vault. The fuse and switch will be enclosed in SF_6 gas for insulation. Replacement of the fuse(s) will most likely not be an on-site procedure.

Copyright © 2002 IEEE. All rights reserved.

Copyright The Institute of Electrical and Electronics Engineers, Inc.
Provided by IHS under license with IEEE
No reproduction or networking permitted without license from IHS
Not for Resale

Annex D

(informative)

Bibliography

[B1] Anderson, M. W., "A Utility Applies Dual Protection to Spot Networks," *IEEE Summer 1969 Power Meeting,* Dallas, TX, Conference Paper No. 69CP669-PWR, June 1969.

[B2] Cranos, J. C., and Gilligan, S. R., "Spot Networks and Connected Building Systems," *IEEE Industrial and General Applications,* vol. IGA-6, pp. 598–606, Nov./Dec.1970.

[B3] Dunki-Jacobs, J. R., "The Effects of Arcing Ground Faults on Low-Voltage System Design," *IEEE Transactions on Industry Applications,* vol. IA-8, no. 3, pp. 223–230, May/June 1972.

[B4] Erickson, I. B., "Ground Fault Protection That Works," *Electrical Systems Design,* pp. 28–37, Nov./ Dec. 1986.

[B5] Fisher, L. E., "Resistance of Low-Voltage AC Arc," *IEEE Transactions on Industry and General Applications,* vol. IGA-6, pp. 607–616, Nov./Dec. 1970.

[B6] Glenn, D. J., "A New Fault-Interrupting Device for Improved Medium-Voltage System and Equipment Protection," *IEEE/IAS Pulp and Paper Conference,* Toronto, Ontario, Canada, Paper 440-T52, June 1984.

[B7] Griffin, T. R., Byrd, G. L., and Whitter, D. A., "Fault Tests on 480Y/277 V Spot Networks," *IEEE/PES Conference,* New Orleans, Paper 66-485, July 1966.

[B8] Heller, F., and Matthysse, I., "Limiters, Their Design Characteristics and Applications," *AIEE Transactions,* vol. 74, pp. 913–915, Oct. 1955.

[B9] IEEE 100, *The Authoritative Dictionary of IEEE Standards Terms,* Seventh Edition.[8]

[B10] Johnston, W. F., "How Do You Protect Your Spot Networks," *Electric Light and Power,* pp. 71–73, Jan. 1970.

[B11] Kaufmann, R. H., and Page, J. C., "Arcing Fault Protection for Low-Voltage Power Distribution Systems—Nature of the Problem," *AIEE Transactions on Power Systems Applications,* vol. PAS-79, pp. 160–167, June 1960.

[B12] Kischefsky, J. A., "Design and Operating Experience of Protectors for Network Transformers," *EEI Working Group on 277/480 Volt Secondary Fault Protection Systems Meeting,* Duluth, MN, Oct. 1986.

[B13] Landman, R. J., and Louie, B., "Fiberoptic SCADA Safeguards Underground Distribution Network," *IEEE Computer Applications in Power,* vol. 5, no. 2, pp. 39–44, April 1992.

[B14] Leinback, E. L., and Brookes, A. S., "Coordination of Secondary Network Protection," *AIEE Transactions,* vol. 74, pp. 924–930, Oct. 1955.

[B15] Peach, N., "Protect Low-Voltage Systems from Arcing-Fault Damage," *Power,* vol. 108, pp. 61–65, Apr. 1964.

[8]The IEEE products referred to in Annex D are trademarks of the Institute of Electrical and Electronics Engineers, Inc.

 Copyright © 2002 IEEE. All rights reserved.

Copyright The Institute of Electrical and Electronics Engineers, Inc.
Provided by IHS under license with IEEE
No reproduction or networking permitted without license from IHS Not for Resale

[B16] “Polychlorinated Biphenyls in Electrical Transformers,” US Code of Federal Regulations, US EPA Final Rule, *Federal Register,* 40 CFR Part 761.

[B17] Roop, D. W., and Vidonic, N. G., “Arcing Fault Protection on VEPCO’s 480Y/277 V Secondary Spot Networks,” *IEEE Transactions on Power Apparatus and Systems,* vol. PAS-102, no. 2, pp. 364–372, Feb. 1983.

[B18] Schwab, R. L., and Stohr, E. W., “Secondary Network Equipment for 250–600 Volt Systems,” *AIEE Transactions on Power Applications and Systems,* vol. PAS-73, pp. 1531–1536, Dec. 1954.

[B19] Smith, D. R., “Another Look at 480 Volt Spot Network Protection,” *Electric Light and Power,* T/D Edition, pp. 60–63, Mar. 1971.

[B20] Smith, D. R., Bishop, M. T., and Rackliffe, G. B., “Research and New Protection Concepts for 480 Volt Spot Networks,” *EEI Working Group on 277/480 Volt Secondary Fault Protection Systems Meeting,* Duluth, MN, Oct. 1986.

[B21] Smith, D. R., and Matty, P. W., “Spot Networks Can Improve Service Reliability to Suburban Load Centers,” *Westinghouse Engineer,* May 1969.

[B22] Sonnemann, W. K., et al., “Compensator Distance Relaying—Part I, II, and III,” *AIEE Transactions on Power Apparatus and Systems,* vol. PAS-77, pp. 372–402, 1958.

[B23] Wagner, C. F., and Fountain, L. L., “Arcing Fault Currents in Low-Voltage AC Circuits,” AIEE Transactions, vol. 67, pp. 166–174, 1948.

[B24] Xenis, C. P., “The Limiter—Its Basic Functions in Network Distribution Systems,” *AIEE Transactions,* vol. PAS-74, pp. 922–924, Oct. 1955.

Copyright © 2002 IEEE. All rights reserved.

Copyright The Institute of Electrical and Electronics Engineers, Inc.
Provided by IHS under license with IEEE
No reproduction or networking permitted without license from IHS Not for Resale

Copyright © 2002 IEEE. All rights reserved.

Copyright The Institute of Electrical and Electronics Engineers, Inc.
Provided by IHS under license with IEEE
No reproduction or networking permitted without license from IHS
Not for Resale