IEEE Std C37.103™-2004
(Revision of
IEEE Std C37.103-1990)

IEEE Standards

C37.103™

IEEE Guide for Differential and Polarizing Relay Circuit Testing

IEEE Power Engineering Society

Sponsored by the
Power System Relaying Committee

IEEE

3 Park Avenue, New York, NY 10016-5997, USA

16 December 2004

Print: SH95183
PDF: SS95183

--`,,,`,`-`-`,,`,,`,`,,`---

Copyright The Institute of Electrical and Electronics Engineers, Inc.
Provided by IHS under license with IEEE
No reproduction or networking permitted without license from IHS

Not for Resale

Recognized as an
American National Standard (ANSI)

IEEE Std C37.103™-2004
(Revision of
IEEE Std C37.103-1990)

IEEE Guide for Differential and Polarizing Relay Circuit Testing

Sponsor

Power System Relaying Committee
of the
IEEE Power Engineering Society

Approved 23 September 2004

IEEE-SA Standards Board

Approved 29 December 2003

American National Standards Institute

--`,,,`-`-`,,`,,`,`,,`---

Copyright The Institute of Electrical and Electronics Engineers, Inc.
Provided by IHS under license with IEEE
No reproduction or networking permitted without license from IHS

Not for Resale

Abstract: The issues concerning testing and verification of the correctness of differential and polarizing circuits are described and discussed in this guide. The intention of this guide is to help the reader to detect errors in the wiring of protective relays that might cause erroneous operations of protection systems. It is essential to follow systematic testing procedures and record the observations in a proper organized manner. The records should include documentation of all measurements and a comparison with the desired results.
Keywords: differential protection, generator protection, line protection, polarized ground fault relays, polarized line protection relays, relay testing, transformer protection

The Institute of Electrical and Electronics Engineers, Inc.
3 Park Avenue, New York, NY 10016-5997, USA

Copyright © 2004 by the Institute of Electrical and Electronics Engineers, Inc.
All rights reserved. Published 16 December 2004. Printed in the United States of America.

IEEE is a registered trademark in the U.S. Patent & Trademark Office, owned by the Institute of Electrical and Electronics Engineers, Incorporated.

Print: ISBN 0-7381-3840-1 SH95183
PDF: ISBN 0-7381-3841-X SS95183

No part of this publication may be reproduced in any form, in an electronic retrieval system or otherwise, without the prior written permission of the publisher.

Copyright The Institute of Electrical and Electronics Engineers, Inc.
Provided by IHS under license with IEEE
No reproduction or networking permitted without license from IHS Not for Resale

IEEE Standards documents are developed within the IEEE Societies and the Standards Coordinating Committees of the IEEE Standards Association (IEEE-SA) Standards Board. The IEEE develops its standards through a consensus development process, approved by the American National Standards Institute, which brings together volunteers representing varied viewpoints and interests to achieve the final product. Volunteers are not necessarily members of the Institute and serve without compensation. While the IEEE administers the process and establishes rules to promote fairness in the consensus development process, the IEEE does not independently evaluate, test, or verify the accuracy of any of the information contained in its standards.

Use of an IEEE Standard is wholly voluntary. The IEEE disclaims liability for any personal injury, property or other damage, of any nature whatsoever, whether special, indirect, consequential, or compensatory, directly or indirectly resulting from the publication, use of, or reliance upon this, or any other IEEE Standard document.

The IEEE does not warrant or represent the accuracy or content of the material contained herein, and expressly disclaims any express or implied warranty, including any implied warranty of merchantability or fitness for a specific purpose, or that the use of the material contained herein is free from patent infringement. IEEE Standards documents are supplied **"AS IS."**

The existence of an IEEE Standard does not imply that there are no other ways to produce, test, measure, purchase, market, or provide other goods and services related to the scope of the IEEE Standard. Furthermore, the viewpoint expressed at the time a standard is approved and issued is subject to change brought about through developments in the state of the art and comments received from users of the standard. Every IEEE Standard is subjected to review at least every five years for revision or reaffirmation. When a document is more than five years old and has not been reaffirmed, it is reasonable to conclude that its contents, although still of some value, do not wholly reflect the present state of the art. Users are cautioned to check to determine that they have the latest edition of any IEEE Standard.

In publishing and making this document available, the IEEE is not suggesting or rendering professional or other services for, or on behalf of, any person or entity. Nor is the IEEE undertaking to perform any duty owed by any other person or entity to another. Any person utilizing this, and any other IEEE Standards document, should rely upon the advice of a competent professional in determining the exercise of reasonable care in any given circumstances.

Interpretations: Occasionally questions may arise regarding the meaning of portions of standards as they relate to specific applications. When the need for interpretations is brought to the attention of IEEE, the Institute will initiate action to prepare appropriate responses. Since IEEE Standards represent a consensus of concerned interests, it is important to ensure that any interpretation has also received the concurrence of a balance of interests. For this reason, IEEE and the members of its societies and Standards Coordinating Committees are not able to provide an instant response to interpretation requests except in those cases where the matter has previously received formal consideration. At lectures, symposia, seminars, or educational courses, an individual presenting information on IEEE standards shall make it clear that his or her views should be considered the personal views of that individual rather than the formal position, explanation, or interpretation of the IEEE.

Comments for revision of IEEE Standards are welcome from any interested party, regardless of membership affiliation with IEEE. Suggestions for changes in documents should be in the form of a proposed change of text, together with appropriate supporting comments. Comments on standards and requests for interpretations should be addressed to:

Secretary, IEEE-SA Standards Board
445 Hoes Lane
P.O. Box 1331
Piscataway, NJ 08855-1331
USA

Note: Attention is called to the possibility that implementation of this standard may require use of subject matter covered by patent rights. By publication of this standard, no position is taken with respect to the existence or validity of any patent rights in connection therewith. The IEEE shall not be responsible for identifying patents for which a license may be required by an IEEE standard or for conducting inquiries into the legal validity or scope of those patents that are brought to its attention.

Authorization to photocopy portions of any individual standard for internal or personal use is granted by the Institute of Electrical and Electronics Engineers, Inc., provided that the appropriate fee is paid to Copyright Clearance Center. To arrange for payment of licensing fee, please contact Copyright Clearance Center, Customer Service, 222 Rosewood Drive, Danvers, MA 01923 USA; +1 978 750 8400. Permission to photocopy portions of any individual standard for educational classroom use can also be obtained through the Copyright Clearance Center.

--`,,`,`-`-`,,`,,`,`,,`---

Copyright The Institute of Electrical and Electronics Engineers, Inc.
Provided by IHS under license with IEEE
No reproduction or networking permitted without license from IHS Not for Resale

Introduction

(This introduction is not part of IEEE Std C37.103-2004, IEEE Guide for Differential and Polarizing Relay Circuit Testing.)

Errors in the wiring of connections to protective relays have caused erroneous operations of the associated protective schemes resulting in many serious power interruptions. In most cases, thorough testing would have discovered those incorrect connections. Ground relay polarizing and differential relay connections are the most troublesome and difficult to locate; therefore, this guide describes and discusses the issues concerning testing and verification of the correctness of these circuits.

This guide describes tests required for ensuring correct connections. Relay calibration, setting, insulation, instrument transformer tests, etc., are also referred to in this guide, but it is assumed that the individual users have developed these tests, and therefore they are not discussed in detail. Methods for testing differential and polarizing circuits have never really been defined by the manufacturers because a large variety of ways in which differential and polarized circuits are applied in relay systems. Consequently, utilities develop their own testing techniques, which can vary widely depending on factors such as the availability of test switches, test gear, test philosophy, problems discovered in the past, and manpower. Good systematic testing should include systematic documentation of the tests and the test procedures. This should include documentation of all measurements and a comparison with the desired results.

Comments on the advantages and disadvantages of the different techniques are presented, and operating considerations for personnel and equipment are included. Since most of the circuit verification tests include passing current through either the current transformer primaries or secondaries, the voltage source to accomplish these tests varies. For primary testing that may include power transformer windings, the required source voltage will be substantial. For secondary testing, the source voltage may be relatively low. For some of these circuit tests, variable voltages are needed. In each case, the source is identified and noted on the figure involved.

Traditional electromechanical and solid-state differential relays made no provision for phase shifts in the transformers; the connections and wiring had to be arranged so that the normal load currents flowing into the respective primary and secondary “restraint” windings were 180° out of phase. Further, some current transformer (CT) connections were not possible without the use of wye-delta auxiliary CTs or a zero-sequence trap (see IEEE Std C57.13.1™-1981).[a] Electromechanical and solid-state relays usually did not provide direct readout of the currents in the relays.

In contrast, present numerical relays compensate for the transformer/CT connections and provide readouts from a front panel human-machine interface (HMI) and/or via the relay communications port. This provision simplifies testing in three ways:

— The installation may be designed such that the CT secondary circuits are all connected in wye, making wiring checkout easier.

— Amplitude and phase of primary/secondary injection and load currents can be checked by interrogation of the relay via the HMI or from a portable computer via the relay communications port. The processing of the signals in the relay automatically takes into account the relationship between the restraint and operating currents that can be ascertained.

— The manufacturer usually provides a worksheet for entry of all the current and phase angle readings, which simplifies interpretation of the results.

[a]Information on references can be found in Clause 2.

Copyright © 2004 IEEE. All rights reserved.

Copyright The Institute of Electrical and Electronics Engineers, Inc.
Provided by IHS under license with IEEE
No reproduction or networking permitted without license from IHS
Not for Resale

Notice to Users

Errata

Errata, if any, for this and all other standards can be accessed at the following URL: http://standards.ieee.org/reading/ieee/updates/errata/index.html. Users are encouraged to check this URL for errata periodically.

Interpretations

Current interpretations can be accessed at the following URL: http://standards.ieee.org/reading/ieee/interp/index.html.

Patents

Attention is called to the possibility that implementation of this standard may require use of subject matter covered by patent rights. By publication of this standard, no position is taken with respect to the existence or validity of any patent rights in connection therewith. The IEEE shall not be responsible for identifying patents or patent applications for which a license may be required to implement an IEEE standard or for conducting inquiries into the legal validity or scope of those patents that are brought to its attention.

Participants

This guide was prepared by the Differential and Polarizing Circuit Testing Working Group of the Relaying Practices Subcommittee of the Power Systems Relaying Committee of the IEEE Power Engineering Society. The Working Group expresses its appreciation to all those who have contributed to this guide.

The following were members of the Differential and Polarizing Circuit Testing Working Group at the time this guide was approved:

Mohindar S. Sachdev, *Chair*
James D. Huddleston, III, *Vice Chair*

Richard F. Angle	William J. Marsh, Jr.	Bob Ryan
G. Fenner	Jeffrey L McElray, Sr.	L. E. Smith
James W. Ingleson	R. Meachem	Philip B. Winston
Fidel Marquez	Mike Meisinger	

The following individuals were previously members of the Differential and Polarizing Circuit Testing Working Group:

G. E. Alexander	P. A. Kotos	J. E. Stephens
M. P. Baldwin	M. Lukas	M. W. Young

William J. Marsh, Jr., chaired the Differential and Polarizing Circuit Testing Working Group until his retirement in May 2002; draft 12, and earlier drafts, of this guide were completed under his leadership.

Copyright © 2004 IEEE. All rights reserved.

Copyright The Institute of Electrical and Electronics Engineers, Inc.
Provided by IHS under license with IEEE
No reproduction or networking permitted without license from IHS
Not for Resale

The following members of the individual balloting committee voted on this guide. Balloters may have voted for approval, disapproval, or abstention.

William Ackerman
Steve Alexanderson
Richard F. Angle
Munnu Bajpai
Stuart Bouchey
Gustavo Brunello
Luis Coronado
Ronald Daubert
Paul Drum
Amir El-Sheikh
Gary Engmann
Tom Ernst
Jeffrey Gilbert
Erik Guillot
Roger Hedding
Jerry Hohn
Edward Horgan, Jr.
James D. Huddleston, III
James W. Ingleson
Jason Lin
Gregory Luri
William Majeski
Fidel Marquez
William J. Marsh, Jr.
Jesus Martinez
Jeffrey L. McElray, Sr.
Mike Meisinger
Gary Michel
Dean Miller
Daleep C. Mohla
Bill Moncrief
Brian Mugalian
Charles Rogers
James Ruggieri
Bob Ryan
Mohindar S. Sachdev
Thomas Schossig
Tony Seegers
Tarlochan Sidhu
Mark Simon
Richard Taylor
John T. Tengdin
Demetrios Tziouvaras
Philip B. Winston
Karl Zimmerman

When the IEEE-SA Standards Board approved this standard on 23 September 2004, it had the following membership:

Don Wright, *Chair*
Howard M. Frazier, *Vice Chair*
Judith Gorman, *Secretary*

H. Stephen Berger
Joseph A. Bruder
Bob Davis
Richard DeBlasio
Julian Forster*
Toshio Fukuda
Arnold M. Greenspan
Raymond Hapeman
Donald N. Heirman
Laura Hitchcock
Richard H. Hulett
Anant Kumar Jain
Lowell G. Johnson
Joseph L. Koepfinger*
Tom McGean
Steve M. Mills
Daleep C. Mohla
William J. Moylan
Paul Nikolich
Gary S. Robinson
Malcolm V. Thaden
Geoffrey O. Thompson
Doug Topping
Howard L. Wolfman

*Member Emeritus

Also included are the following nonvoting IEEE-SA Standards Board liaisons:

Alan Cookson, *NIST Representative*
Satish K. Aggarwal, *NRC Representative*

Savoula Amanatidis
IEEE Standards Managing Editor

Copyright © 2004 IEEE. All rights reserved.
Copyright The Institute of Electrical and Electronics Engineers, Inc.
Provided by IHS under license with IEEE
No reproduction or networking permitted without license from IHS
Not for Resale

Contents

1. Overview 1

1.1 Scope 1
1.2 Purpose 1

2. References 1

3. Definitions 2

4. Operating considerations for personnel and equipment 2

4.1 Primary testing 2
4.2 Secondary testing 2
4.3 Alternative to primary and secondary testing 2
4.4 Effect of opening CT circuits 3
4.5 CT short circuiting devices 3

5. Preparatory tests 3

5.1 CTs 3
5.2 Wiring checks 4
5.3 Test switches 4
5.4 Test equipment 5

6. Power supplies for tests 5

6.1 AC sources for primary current injection tests 5
6.2 AC sources for secondary current injection tests 6
6.3 DC current sources for primary and secondary injection tests 6
6.4 Demagnetizing the core of a CT 6

7. Generator, motor, and reactor differential relaying 6

7.1 Primary current injection tests 6
7.2 Secondary current injection tests 7
7.3 In-service tests 9

8. Bus differential relaying 10

8.1 Primary current injection tests 10
8.2 Secondary current injection tests 12
8.3 In-service tests 12

9. Transformer differential relaying 13

9.1 Primary current injection tests 13
9.2 Secondary current injection tests 15
9.3 In-service tests 17

Copyright © 2004 IEEE. All rights reserved.

Copyright The Institute of Electrical and Electronics Engineers, Inc.
Provided by IHS under license with IEEE
No reproduction or networking permitted without license from IHS
Not for Resale

10. Potential polarized phase relays 18

10.1 Primary current injection tests 19
10.2 Secondary injection tests 19
10.3 In-service tests 21

11. Potential polarized ground relays 22

11.1 Voltage-circuit secondary voltage injection test 22
11.2 In-service tests 24

12. Neutral-current-polarized ground relays 27

12.1 Primary current injection tests—primary of all CTs accessible 27
12.2 Primary current injection tests—primary of neutral CT not accessible 28
12.3 In-service tests for current polarized relays 30

13. Tertiary current polarized ground relays 31

13.1 Primary current injection tests—tertiary CTs not accessible, breaker CTs accessible 32
13.2 In-service tests 33

Annex A (informative) Aids to differential relay load checks 34

Annex B (informative) Bibliography 37

Copyright © 2004 IEEE. All rights reserved.

Copyright The Institute of Electrical and Electronics Engineers, Inc.
Provided by IHS under license with IEEE
No reproduction or networking permitted without license from IHS
Not for Resale

IEEE Guide For Differential and Polarizing Relay Circuit Testing

1. Overview

1.1 Scope

This guide covers the tests required to ensure correct connections of differential relays and polarizing circuits of phase and ground relays. Although other preparatory tests are mentioned in this guide, these tests are not discussed in detail.

1.2 Purpose

This guide is intended to provide methodology to establish a systematic series of tests to verify the integrity and accuracy of connections of differential and polarizing circuits.

2. References

This guide shall be used in conjunction with the following publications. If a publication is superseded by an approved revision, the revision will apply.

IEEE Std C37.110™-1996, IEEE Guide for the Application of Current Transformers Used for Protective Relaying Purposes.[1, 2]

IEEE Std C57.13.1™-1981 (Reaff 1999), IEEE Guide for Field Testing of Relaying Current Transformers.

IEEE Std C57.13.3™-1983 (Reaff 1990), IEEE Guide for the Grounding of Instrument Transformer Secondary Circuits and Cases.

IEEE PES Special Report, Publication No. 96TP115-0, Relay Performance Testing, 1996.

[1]The IEEE standards or products referred to in Clause 2 are trademarks owned by the Institute of Electrical and Electronics Engineers, Incorporated.

[2]IEEE publications are available from the Institute of Electrical and Electronics Engineers, Inc., 445 Hoes Lane, P.O. Box 1331, Piscataway, NJ 08855-1331, USA (http://standards.ieee.org/).

Copyright © 2004 IEEE. All rights reserved.

Copyright The Institute of Electrical and Electronics Engineers, Inc.
Provided by IHS under license with IEEE
No reproduction or networking permitted without license from IHS
Not for Resale

3. Definitions

For definitions of terms used in this guide, see IEEE Std C37.100™-1992 [B2][3] and *The Authoritative Dictionary of IEEE Standards Terms,* Seventh Edition [B1].

4. Operating considerations for personnel and equipment

A properly trained and equipped relay tester is good insurance for accident prevention. The tester's actions can result in the operation of circuit breakers and motorized switches, which can affect the tester's safety as well as that of others. Therefore, proper communication with all personnel in the area is important.

4.1 Primary testing

Whenever it becomes necessary to work on primary equipment, it is essential to observe all the necessary switching or locking and tagging procedures and to obey those procedures in a rigid and formalized manner. Operating and testing procedures should be followed to avoid exposure to substation equipment that has not been properly de-energized.

NOTE—The primary testing procedures are included to make this guide historically accurate. The Working Group realizes that some of these procedures may not be possible due to personnel safety considerations, lack of suitable power supplies, and in the case of generators, very large current transformer (CT) ratios.

4.2 Secondary testing

Modern relaying systems are designed around the use of dead-front relay and control panels and flexible drawout relays. Whenever possible, secondary relay circuit testing should be performed from the front face of the relay panel through the use of the relay test switches or test connectors associated with drawout relays. Good engineering design practice should take advantage of these features for keeping the relay tester away from the live-rear side of the relay or control panel as much as possible.

At times, it is necessary for the relay tester to work from the live-rear side of the relay or control panel. When working from that side, the tester should find all components clearly labeled including wiring, terminal strips, and fuse blocks.

When it becomes necessary to test equipment that is in service, care should be taken that the appropriate backup equipment is in operation.

4.3 Alternative to primary and secondary testing

Where primary and/or secondary testing is not a normal practice, a preparatory test should be completed prior to energizing the equipment and completing the in-service testing. These preparatory tests should include as a minimum: verifying CT polarity and connections, ringing out circuits from the equipment to the panels, verifying correct current paths through all the applicable relays, and verifying polarizing circuits and/or voltage connections.

Use the techniques described in Clause 7, Clause 8, Clause 9, and Clause 10; modify the techniques to suit the particular application. Next, conduct the in-service tests, reading all current magnitudes and phase angles to determine correct connections.

[3]The numbers in brackets correspond to those in the bibliography in Annex B.

Copyright © 2004 IEEE. All rights reserved.
Copyright The Institute of Electrical and Electronics Engineers, Inc.
Provided by IHS under license with IEEE
No reproduction or networking permitted without license from IHS
Not for Resale

4.4 Effect of opening CT circuits

An open-circuited CT secondary whose primary circuit is carrying current is hazardous. The voltage of the secondary winding of the CT attempts to rise to a value sufficient to drive the proper secondary current through the impedance created by the open circuit (air gap). In the absence of secondary load current, the average voltage will rise to the rated excitation voltage, with peak voltages several times this value.

Warning

No attempt should be made to reroute the relay currents by disconnecting current circuit wires from terminal blocks or relay terminals when energized, because extremely high voltages could result from such actions. Because the high voltages could be harmful to the persons performing the tests, adequate precautions must be taken when performing these tests.

4.5 CT short-circuiting devices

Most CTs are connected to their burdens through a short-circuiting device located on the CT secondary lead termination point. By proper use of the CT shorting device, it is possible to work on energized CT secondary wiring circuits without necessarily taking the primary equipment out of service, but there are pitfalls.

Care should be taken beforehand to properly identify the CT to be shorted. An ammeter should be connected in the secondary burden to monitor the circuit before, during, and after the CT is shorted and unshorted. Affected relays such as differential, ground, and polyphase relays should be taken out of service before conducting load tests. After conducting the load tests, the relays should be returned to service.

5. Preparatory tests

Before attempting any specific tests by the manufacturer or user to prove the wiring, the following tests should have been completed.

5.1 CTs

It is advisable to test CTs to confirm that their performance is acceptable. Issues concerning the usually performed tests are briefly outlined in 5.1.1, 5.1.2, 5.1.3, 5.1.4, and 5.1.5.

5.1.1 Ratio test

This test is not intended to prove the accuracy of the ratio, but simply to prove that the ratio, as installed, is as specified, and if taps are available, that they also have the correct ratio and have been wired to the correct terminals.

5.1.2 Polarity test

This test proves that the predicted direction of secondary current flow is correct for a given direction of primary current flow. This is essential where currents are summed, compared in differential mode either electrically or magnetically, or where currents and voltages are compared within the relay.

5.1.3 Insulation test

The CT should be tested to prove that the insulation of the secondary winding-to-ground is satisfactory. The CT secondary ground must be lifted for this test.

NOTE—If high-voltage insulation tests are conducted, care must be taken not to expose solid-state relays/devices to the high voltage.

The techniques for carrying out these tests on the CTs are described in IEEE Std C57.13.1-1981.[4]

[4]Information on references can be found in Clause 2.

Copyright © 2004 IEEE. All rights reserved.

Copyright The Institute of Electrical and Electronics Engineers, Inc.
Provided by IHS under license with IEEE
No reproduction or networking permitted without license from IHS
Not for Resale

5.1.4 Resistance measurement

This test confirms that the CT secondary winding dc resistance is within specified limits and that there are no high-resistance joints in the CT or wiring.

5.1.5 Excitation test

This test confirms that the CT, as supplied, is of the correct accuracy rating, that there are no shorted turns in the CT, and that there are no wiring or physical shorts on the CT after installation, primary or secondary. Manufacturer's design curves for the CT should be available; the actual results should be compared with the design curves.

5.2 Wiring checks

Some verification procedures assume that a detailed check of the wiring for agreement with the elementary diagrams should be carried out prior to injection testing. Other verification procedures assume that any wiring errors will be disclosed by the actual injection tests. It is true that injection tests will disclose some wiring errors, but it should be realized that this procedure can damage the equipment because the wiring error may result in accidental injection of test quantities that exceed the rating of the inadvertently connected equipment. Also, errors may not be detected until incorrect operation occurs in service. Selector switches in current circuits, such as ammeter switches, should be checked for proper contact development and operation.

When performing single-phase injection, three-phase and neutral current circuits should be monitored to verify the presence of current where it should be and the absence of current where it should not be. The three-line, elementary, or schematic diagrams should be used for the purpose of checking the connections.

Whichever verification philosophy is used on wiring checks, a test should be performed to prove that multiple grounds do not exist. This test is best performed by removing the known or desired ground and checking insulation to ground at the same location.

Warning

If the current transformer secondary circuit ground is removed without the current transformer primary being de-energized, dangerous voltages may result in the secondary circuit. This is due to electrostatic coupling even with no primary current flowing in the current transformer. The effect of the voltage experienced on the secondary circuit could be harmful to the persons who may come in contact with the secondary circuit. Persons performing the tests must, therefore, make certain that the secondary circuit ground is not removed until the current transformer primary has been de-energized.

5.3 Test switches

Current switches consisting of a test jack and current shorting elements are placed in current circuits to facilitate checkout, troubleshooting, calibration, and periodic testing of relays, meters, transducers, and other instruments. These switches enable the tests to be performed without de-energizing the primary circuit; a switch may be a separate unit or may be built into a protective relay case.

5.3.1 Test jacks

Test jacks are used to allow current measurements to be taken without opening the circuits by inserting a test plug into a test jack. A test plug is a two-wire device connected to a current reading device. Inserting a test plug into a test jack places a current reading device in series with the current circuit. Before the test plug is inserted in the jack, extreme care should be taken to ascertain that a complete low-impedance circuit exists through the current reading device. This can readily be accomplished by using an ohmmeter. A low resistance from the polarity blade to non-polarity blade of the test plug indicates a complete current path. A minimal amount of time is required to perform this test, and its usefulness in preventing the inadvertent opening of a CT secondary makes its frequent use worthwhile.

Copyright © 2004 IEEE. All rights reserved.
Copyright The Institute of Electrical and Electronics Engineers, Inc.
Provided by IHS under license with IEEE
No reproduction or networking permitted without license from IHS Not for Resale

5.3.2 Current shorting switch

The current shorting switch is usually found mounted on the test jack. The purpose of this switch is to disconnect the current coil of the device to be tested from the current circuit or CT secondary. As its name implies, it does this by first shorting the source-side circuit and then disconnecting the load-side circuit by means of make-before-break contacts. This operation bypasses and open-circuits the device to be tested. An important point to remember is that this switch does not ground the CT. Also, depending upon the switch configuration, total isolation of the load-side circuit may require insertion of a "dummy" test plug in the test jack. With the switch in the shorted position, a closed current circuit still exists. When a test plug is inserted into the test jack without the shorting switch operated, the circuit from the test plug must be completed in order to keep the CT circuit closed.

5.4 Test equipment

The relays should have been tested in accordance with the manufacturer's instructions and the IEEE PES Special Report No. 96TP115-0-1996 prior to the testing of the circuits by primary or secondary injection.

5.4.1 Transformer load box

This type of test set derives its test voltages and/or currents from a variable autotransformer and loading transformers. The technique is especially useful in high-current testing since the test currents are developed with a lower test voltage, thus reducing the input power requirements for the test source. The output is relatively constant at a low voltage, and therefore, may be subject to some current wave-shape error. This is minimized by using the lowest current output tap (highest source voltage) that will deliver the required test current for the required time duration.

5.4.2 Resistance load box

The resistance box consists of switched resistance units and a variable resistor. It is connected in series with a suitable test current source and the relay under test. The test source must be capable of supplying the required current. The current wave shape is good since the resistance is usually more than the nonlinear impedance of the load.

5.4.3 Electronic techniques

This principle uses electronic circuitry to accurately control and maintain the magnitude, wave shape, and phase-angle relationship of the various test quantities using active feedback of the analog signal. Errors are generally less than 1%.

6. Power supplies for tests

6.1 AC sources for primary current injection tests

The philosophy of primary current injection tests is directly related to the desire for simulating the working of the protective equipment as closely as is physically possible outside a test laboratory. The primary concern usually is the availability and portability of the power supply to be used for conducting these tests. Several good quality power supplies are being marketed today. They provide high currents at low voltages, and their output ranges from 1 to 15 kVA.

Copyright © 2004 IEEE. All rights reserved.

Copyright The Institute of Electrical and Electronics Engineers, Inc.
Provided by IHS under license with IEEE
No reproduction or networking permitted without license from IHS Not for Resale

6.2 AC sources for secondary current injection tests

A flow of about 1 A current in the relays of 5 A nominal rating should be sufficient to obtain acceptable readings on measuring instruments. The 120 V station service is usually a convenient source, which can overcome the impedance of the circuit under test. A variable resistor (resistance load box) or a 120 V lamp bulb can be used to control the level of current that is injected.

6.3 DC current sources for primary and secondary injection tests

The dc primary injection tests are used for checking that the polarities of CTs used in a protection scheme are appropriate. The current flow through the primary winding of a CT causes the flux to build up in its core. The flux links with the secondary winding of the CT, and when the current in the primary winding is constant, the flux is constant and the secondary current is zero. When the current flow in the primary winding is interrupted, the current decays rapidly and so does the flux. This in turn causes a flow of current in the secondary winding of the CT, which can be observed on a milliammeter connected in the secondary circuit. The positive or negative deflection of the needle indicates the polarity of the CT. A readily available source of power to perform these tests on CTs is a 6 V dc battery. It is suggested that the station battery not be used.

6.4 Demagnetizing the core of a CT

For information and procedures for demagnetizing the core of a CT, see IEEE Std C57.13.1-1981.

7. Generator, motor, and reactor differential relaying

The purpose of testing relay circuits is to ensure that relays are properly connected. For example, when the current flowing out of one phase of the generator equals the current flowing into the same phase at the neutral end, then no current should flow in the “operate” winding of the differential relay connected to that phase. Generators, motors, and reactors protected by a differential relay, shown in Figure 1, Figure 2, and Figure 3 for generators, would require identical tests.

The continuous and short-time current ratings of the “restraint” and operate windings of the relay must not be exceeded when injection tests are conducted. The current ratings of the operate windings of a relay are usually less than the ratings of its restraint windings.

7.1 Primary current injection tests

The protected equipment shall not be in service when primary current injection tests are performed. Ideally, primary injection of current could be used to test the differential connections to ensure correct response during internal as well as external faults. The arrangement of Figure 1 can be used to test the circuit of a generator differential relay. A high-voltage source is used to inject currents in the primary circuits. These arrangements are convenient to use, because in most cases, the load-side CTs are physically located close to the neutral-side CTs. Ideally the test current level should be sufficiently high to confirm that the relay will not operate during external faults. However, most test sets are unable to inject currents of the required levels in the winding of large generators, and therefore, the arrangements of Figure 1 cannot be used for testing relay circuits of large generators.

The alternative arrangement, shown in Figure 2, can be used if it is possible to slip the test leads through the CTs. Test sets able to produce sufficiently high currents along with sensitive ammeters are needed to perform this test. This alternative does not totally resolve the problem of the adequacy of test sets. Consider that a test set can produce a maximum of 400 A and the set is used to test the circuit of a differential relay protecting a 1000 MVA generator equipped with 40 000/5 ratio CTs. The maximum current from the test set converts to only 50 mA in the relay circuit. This level of current is not sufficient to test a relay rated for 1 A or 5 A nominal current but may be sufficient to verify the circuit connection.

--`,,,`,`-`-`,,`,,`,`,,`---

Copyright © 2004 IEEE. All rights reserved.

Copyright The Institute of Electrical and Electronics Engineers, Inc.
Provided by IHS under license with IEEE
No reproduction or networking permitted without license from IHS Not for Resale

7.2 Secondary current injection tests

These tests are to be conducted after all wiring changes have been completed and before the protected equipment is energized**.** The test source should be applied first to the phase terminal of the CT, as shown in Figure 3, to confirm the integrity of the path for the flow of current (I_{S1}) through one restraint winding and the operate winding. This test should result in the operation of the relay if the circuit is properly connected and the current level is sufficient. The source should then be applied to the neutral terminal of the CTs to confirm the integrity of the path for the flow of current (I_{S2}) to ground without going through the other restraint winding and the operate winding. This test should not result in the operation of the relay if the circuit is properly connected.

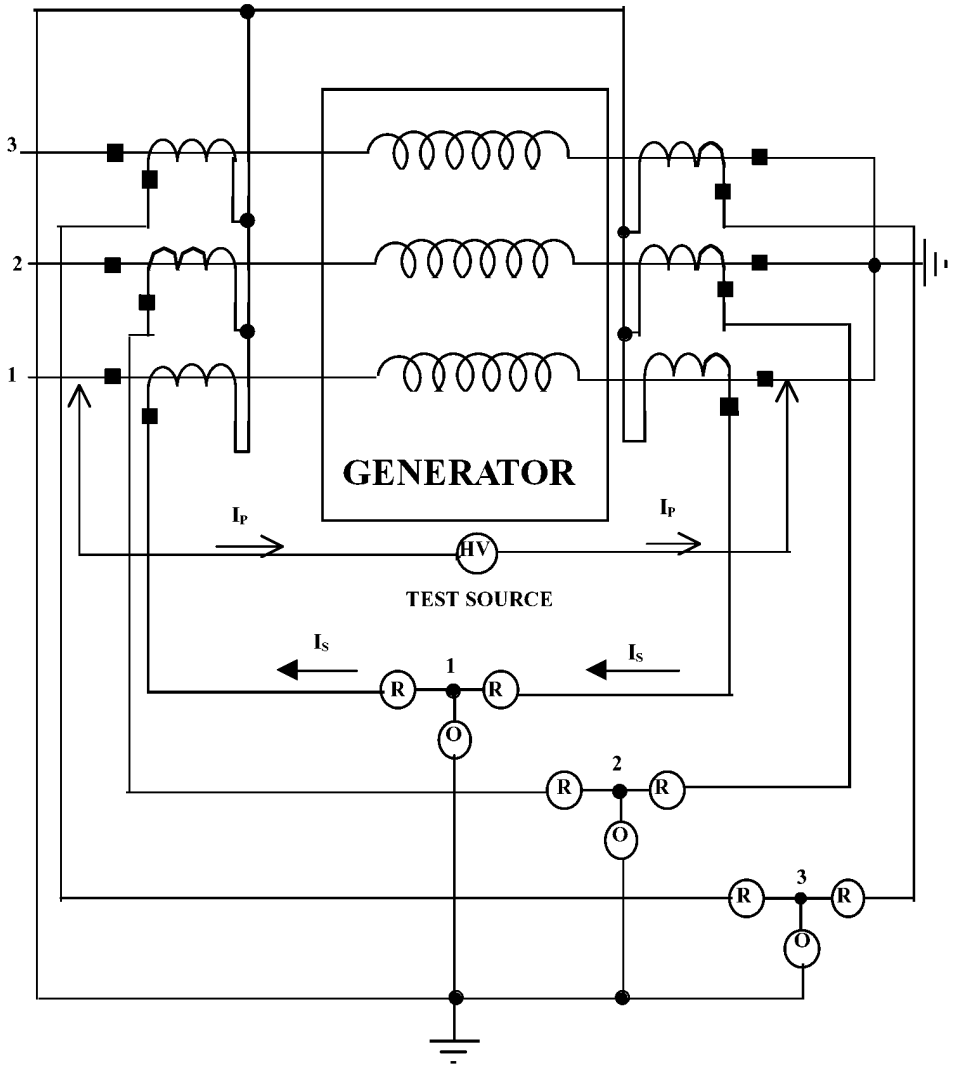

LEGEND
HV - PRIMARY INJECTION TEST SOURCE (HIGH VOLTAGE)
R - RESTRAINING COIL
O - OPERATING COIL

Figure 1—Generator differential-primary current injection through winding (see 7.1)

Copyright © 2004 IEEE. All rights reserved.

Copyright The Institute of Electrical and Electronics Engineers, Inc.
Provided by IHS under license with IEEE
No reproduction or networking permitted without license from IHS
Not for Resale

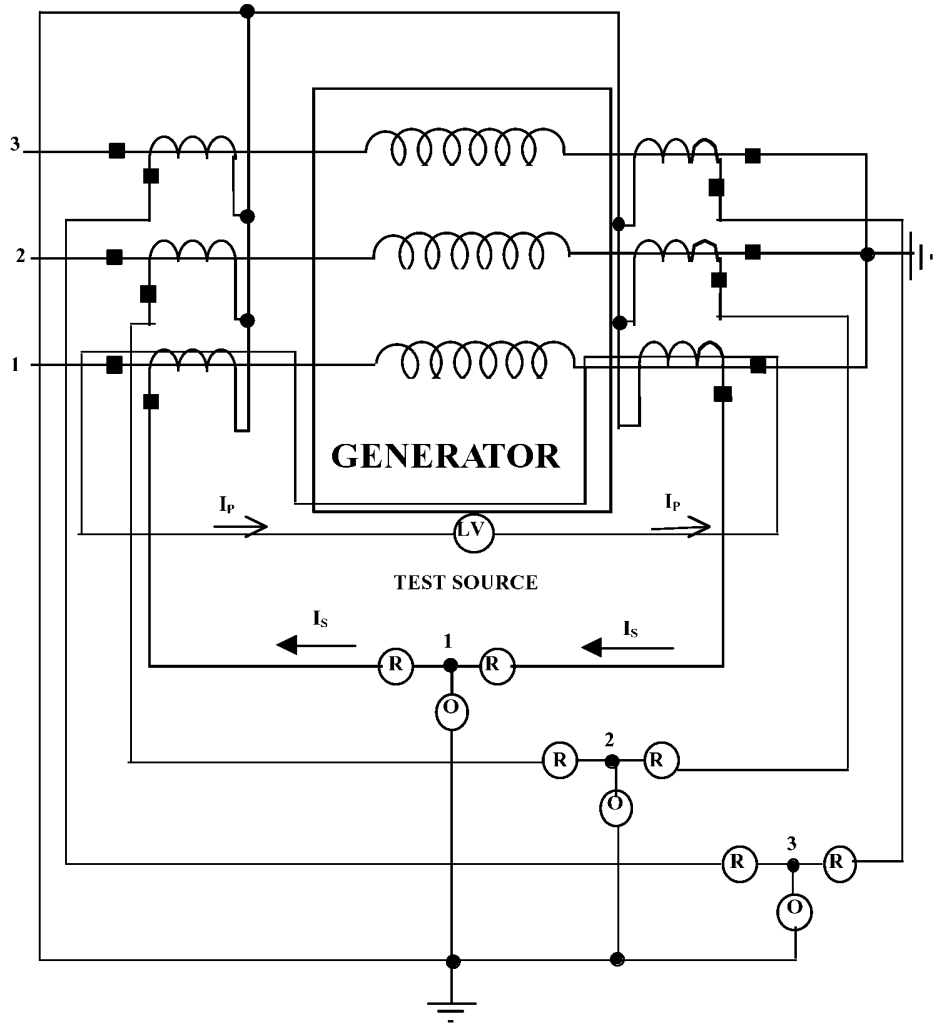

LEGEND
LV - PRIMARY INJECTION TEST SOURCE (LOW VOLTAGE)
R - RESTRAINING COIL
O - OPERATIONS COIL

Figure 2—Generator differential-primary current injection tests leads slipped through CT window (see 7.1)

The current should be present only in the respective relay phase operate and restraint windings when a phase-to-neutral connection is verified. No significant current flows in the windings of the CTs because they are high impedance (virtual open circuits). The excitation impedance is very high at the low test voltage used. Check to make sure that the primary of the CT is not shorted with an operational ground.

These tests should be repeated by applying the test source to the terminals of the remaining five CTs. A phase-angle meter may be used in conjunction with the ammeter, in which case a suitable voltage should be selected and used as a reference throughout the tests.

--`,,,`,`-`-`,,`,,`,`,,`---
Copyright © 2004 IEEE. All rights reserved.
Copyright The Institute of Electrical and Electronics Engineers, Inc.
Provided by IHS under license with IEEE
No reproduction or networking permitted without license from IHS
Not for Resale

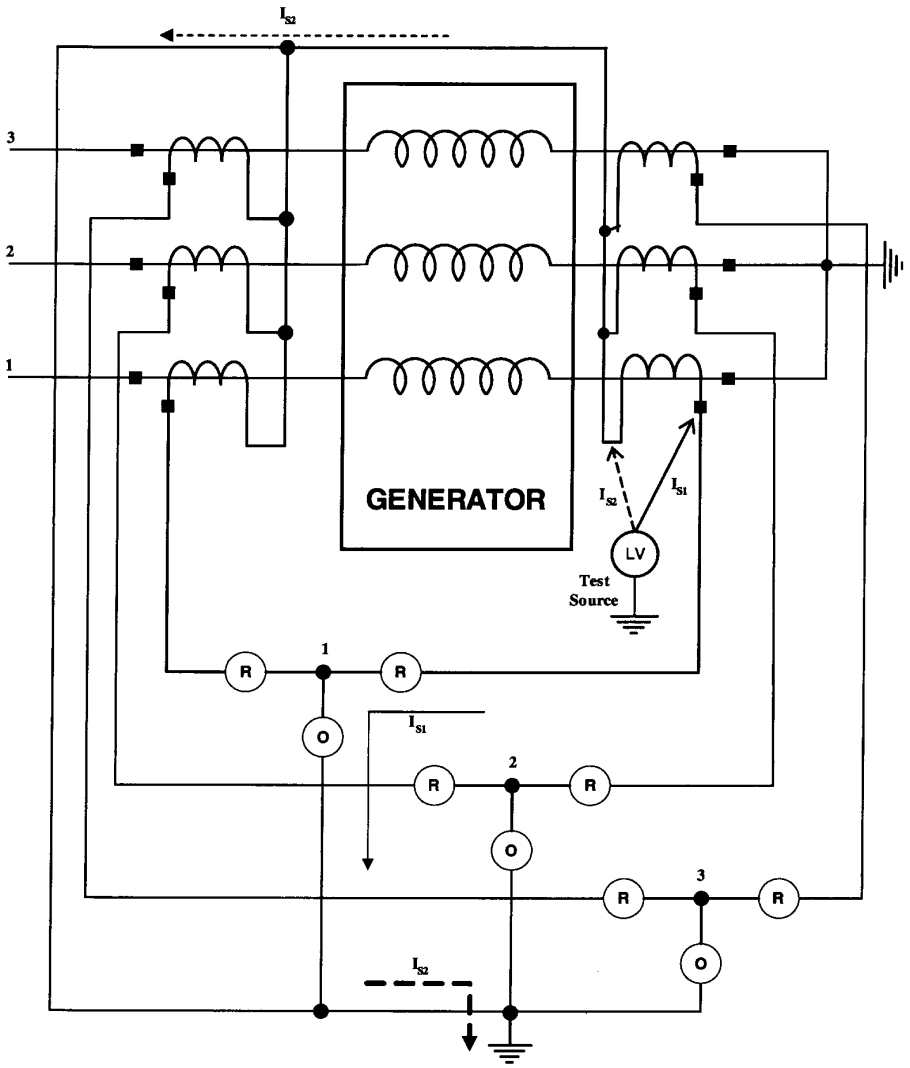

Figure 3—Generator differential-secondary current injection (see 7.2)

7.3 In-service tests

An in-service test should be performed, in addition to the previous tests, before releasing the protection scheme for normal service. This test should be conducted with the differential relay in service and the protected apparatus carrying sufficient load to produce CT secondary current sufficient for obtaining meaningful measurements, but less than the current required to trip the differential relay. It is advisable to have the differential trip in service for initial energization of the protected equipment, and then disable the trip circuit for this test (disabling the trip circuit should only be done after considering any possible risk to the protected equipment from such an action). The amplitude and phase angle of the current in each restraint winding should be measured using a reference source, phase-angle meter, and ammeter. Alternatively, a numeric relay may display the required values on the front panel or via a portable computer interface,

Copyright © 2004 IEEE. All rights reserved.

Copyright The Institute of Electrical and Electronics Engineers, Inc.
Provided by IHS under license with IEEE
No reproduction or networking permitted without license from IHS
Not for Resale

including direct readout of differential current. The currents flowing from the line-side CTs to the restraint windings of the three phases should be equal in magnitude, but displaced by 120° from each other. The currents flowing from the neutral-side CTs to the restraint windings of the three phases should also be equal in magnitude, but displaced by 120° from each other. The currents flowing in the restraint windings connected to the line and neutral-end CTs of each phase should be equal in magnitude and 180° displaced. The currents flowing in the operate windings should also be checked to verify that they are essentially zero.

8. Bus differential relaying

It is possible to apply primary and secondary injection tests to most bus differential relaying schemes. A proper application of phase-angle meters and/or oscilloscopes, in addition to ammeters and voltmeters, provides measurements, which can be used to determine the appropriateness of connections and integrity of components. In-service tests, in which load current quantities can be measured at the relay panel, are also very effective in determining the integrity of the relay circuit being tested.

8.1 Primary current injection tests

Typically, bus differential protection schemes either use CTs to convert system level currents to relay level currents or use linear couplers to convert system level currents to relay level voltages. The primary objective is to balance the secondary signals and produce a net current through, or a voltage across, the protective relay that identifies each disturbance either as an external fault or as an internal fault.

When a fault is outside the bus zone, the connections are appropriate, and the components are functioning properly, the net current in, or the net voltage across, the operate element of the relay is extremely small, and therefore, the relay does not operate. An incorrect connection or short circuit could also cause operating element quantities to be small when simulating an external fault. The operating signals are large when a fault is experienced or simulated in the bus protection zone.

The primary injection tests of a bus differential relay circuit consist of applying a suitable current source across the primary winding of each CT, or linear coupler, and measuring the secondary quantities at the relay location. Each measurement provides an indication that the CT, or the bus coupler, is connected in the proper phase**.** It also provides a rough check for the ratio of the primary to secondary signals.

As indicated in Figure 4, one lead of the primary test source is applied to Phase 1 of Breaker A and the other lead applied to Phase 1 of Breaker B. The low-voltage source causes the current to flow in the primary of the two CTs. The currents in the secondary winding of these CTs are equal and opposite in phase. The current in the relay operating circuit is negligible if the connections are correct. If desired, the phase-angle displacement of the two secondary circuits can be verified to be 180°. The tests should be repeated on Phase 1 of the other breakers using either Breaker A or B as a reference. Then the other phases should be checked in the same manner.

The procedure is similar when linear couplers are used, as shown in Figure 5; the voltages are measured at the relay.

It is important to have an appropriate source that would inject sufficient current in the primary circuit to distinguish between “noise” and stray currents especially when a phase-angle meter or an oscilloscope is used to take the measurements. A high-power source may be required.

Copyright © 2004 IEEE. All rights reserved.
Copyright The Institute of Electrical and Electronics Engineers, Inc.
Provided by IHS under license with IEEE
No reproduction or networking permitted without license from IHS Not for Resale

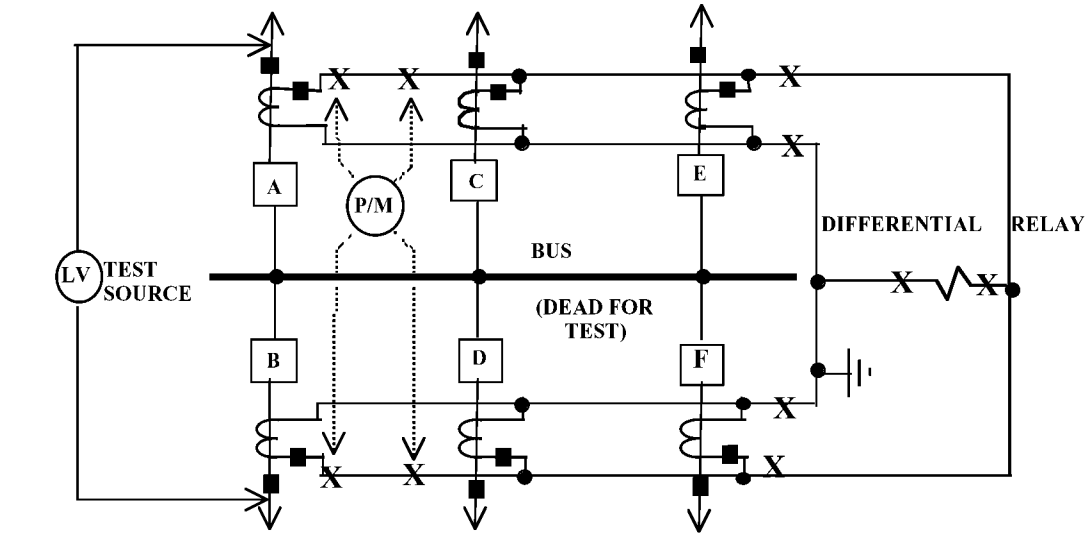

LEGEND
LV - SECONDARY INJECTION TEST SOURCE (LOW VOLTAGE)
P/M - PHASE ANGLE METER (CURRENT/CURRENT)
X - TEST SWITCH

Figure 4—Primary current injection tests for a bus differential system using CTs (see 8.1)

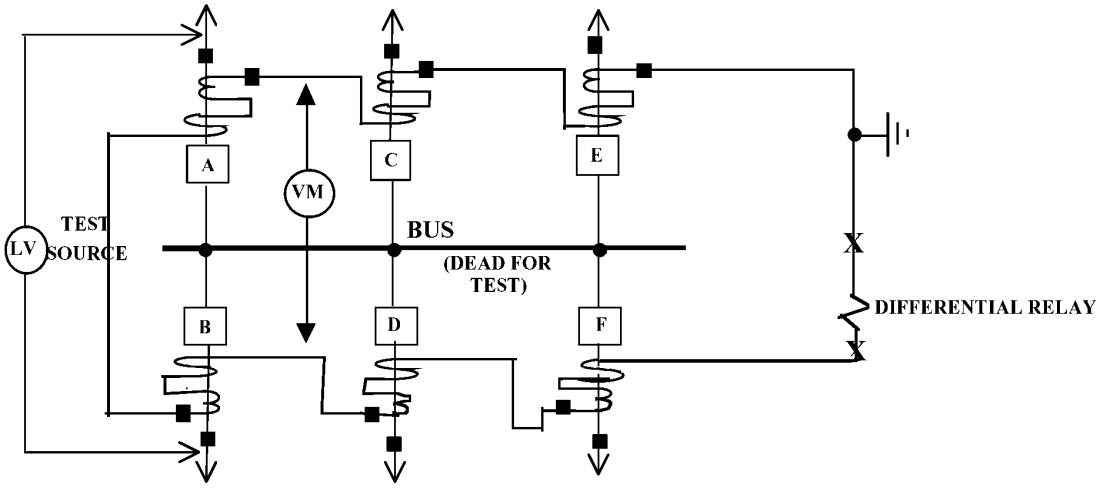

LEGEND
LV - SECONDARY INJECTION TEST SOURCE (LOW VOLTAGE)
VM - VOLTMETER
X - TEST SWITCH

Figure 5—Primary current injection tests for a bus differential system using linear couplers (see 8.1)

Copyright © 2004 IEEE. All rights reserved.

Copyright The Institute of Electrical and Electronics Engineers, Inc.
Provided by IHS under license with IEEE
No reproduction or networking permitted without license from IHS
Not for Resale

8.2 Secondary current injection tests

Secondary current injection testing is convenient to establish that the phasing of the secondary circuits is correct and that the relays are properly connected. Preliminary tests, including CT polarity and ratio checks, should be performed in accordance with the IEEE Std C57.13.1-1981.

These tests are performed when the bus is not energized. A current should be injected at the specified ratio phase lead terminal of the CT, and the current measured in all three relay phases. The current should be present only in the phase being tested. In the case of high-impedance bus relays, connect the ammeter in parallel with the relay. Continuity of the neutral wire to the switchboard ground should be verified by injecting current at each CT neutral terminal.

When linear couplers are used, a voltage should be applied at the linear coupler terminal, and the voltage across the operating elements of all phases of the relay should be measured.

The secondary current injection test should be repeated for each CT or linear coupler until all components in each phase are checked.

8.3 In-service tests

In-service tests should be conducted after primary and/or secondary injection tests, and all other tests have been completed. In most cases, the bus differential trip switches should be left closed during initial energization of the equipment and opened before the load is applied. This prevents any unnecessary tripping of the bus under load if something is wrong in the circuit.

Bus differential protection schemes lend themselves readily to in-service tests provided sufficient current is flowing into and out of the bus to produce measurable flows in each secondary circuit. The current flows do not have to be significant in all parts of the bus simultaneously. The current necessary for this test can sometimes be obtained by circulating reactive current between two sources connected to the bus before connecting loads to the bus. One possible approach is to offset the taps on two transformers connected to the bus and direct the current through selected circuit breakers.

The current through each operate element (if CTs are used) or voltage at the proper terminals of each operate element (if linear couplers are used) should be measured when sufficient current is flowing in and out of the bus. The levels of the current (or voltage) should be essentially zero if the relay circuits are properly balanced. It may be necessary to switch loads to obtain measurable flows in each circuit.

It is necessary to verify that the expected zero currents in, or voltages across, the relay are due to proper balance and not due to a short circuit. The presence of unexpected unbalanced current in, or voltage across, the relay should be carefully analyzed, and the relay circuit and its components should be thoroughly checked. If some time has elapsed since the tests described in 8.1 or 8.2 were conducted, a small current should be injected to cause a measurable unbalance at the relay. Ammeters should be connected in parallel with the operate elements of the high-impedance relays, and it should be verified that the unbalanced current is only in the appropriate element of the relay.

In-service tests may be performed by creating an unbalance by removing one of the inputs. For example, a linear coupler may be removed from the circuit by disconnecting its secondary leads from the circuit and replacing them with a short-circuit jumper. This connection effectively removes the voltage supplied to the differential by the linear coupler. Operate voltage should now be measured across the relay input terminals. The linear coupler should be restored to normal, and the voltage across the relay should be measured again; it should now be zero.

Copyright © 2004 IEEE. All rights reserved.
Copyright The Institute of Electrical and Electronics Engineers, Inc.
Provided by IHS under license with IEEE
No reproduction or networking permitted without license from IHS
Not for Resale

If CTs are being used for inputs, one CT can be removed from the circuit by shorting its secondary leads together and leaving the connection to the relay open circuited. This will remove the current contribution to the differential circuit from this CT. The current in the shorted CT secondary and the operating element of the differential relay should be measured; they should be equal. If a high-impedance differential relay is being used, the ammeter should be connected in parallel with the input terminals. Operating current should return to zero when the connection of the CT is restored to normal.

An oscilloscope is extremely useful in checking linear coupler secondary voltages when current is flowing in their primary circuits. The oscilloscope must be connected to the same reference source for all measurements to avoid misleading results.

Manufacturers supply test equipment that can be permanently wired into a bus differential protection circuit for conducting secondary injection tests. This equipment allows in-service, on-line checking of current measuring components and circuit conditions. The types of bus differential schemes that this equipment can be applied to are the high-impedance voltage-operated differential schemes, low-impedance bus schemes, and the linear coupler bus differential schemes. The operation of these test panels is beyond the scope of this guide, and it is recommended that the manufacturers be consulted for more information.

9. Transformer differential relaying

Before energizing a transformer, the transformer differential relay wiring should be tested by primary injection or secondary injection. A combination of these tests may be required to verify all restraints and operate circuits. In addition to these tests, an in-service test should be made.

9.1 Primary current injection tests

Primary injection techniques depend upon whether the CTs are located in the breakers or in the transformer; therefore, each of these possibilities will be discussed. In addition to the single-phase techniques discussed here, a three-phase current injection test may be performed. This technique is especially useful where the protective relay system requires verification of several layers or zones of protection and diverse schemes. Such relay systems are typically used on generator step-up transformers or large autotransformers.

These tests generally consist of following the path of the current flow through the CT secondary windings and the operate and restraint windings of the differential relay. Some differential relays, such as microprocessor-based units, may not have conventional restraint and operate windings. In such cases, the relay currents of the corresponding phases are electrically isolated. As such, the CTs need not be connected so that the phase shift caused by the power transformer is compensated. However, it is still critical that the current circuits are verified, to assure that each phase of the CT circuit is connected to the proper relay element.

9.1.1 CTs located in breakers

The current source should be tied to Phase 1 on the breaker bushing away from the transformer (see Figure 6). The breaker shall be closed with a ground on the Phase 1 breaker bushing next to the transformer. If the CT secondaries are connected in delta, the primary current divided by the CT ratio can be seen in the operating coil of Phases 1 and 3 (assuming a Phase 1-Phase 2 delta makeup). If the CTs are connected in wye, the current would flow only in the operating coil of Phase 1. In order to verify the current direction through the relay coils, a phase-angle meter is necessary. The other phases can be checked in a similar manner.

Copyright © 2004 IEEE. All rights reserved.

Copyright The Institute of Electrical and Electronics Engineers, Inc.
Provided by IHS under license with IEEE
No reproduction or networking permitted without license from IHS Not for Resale

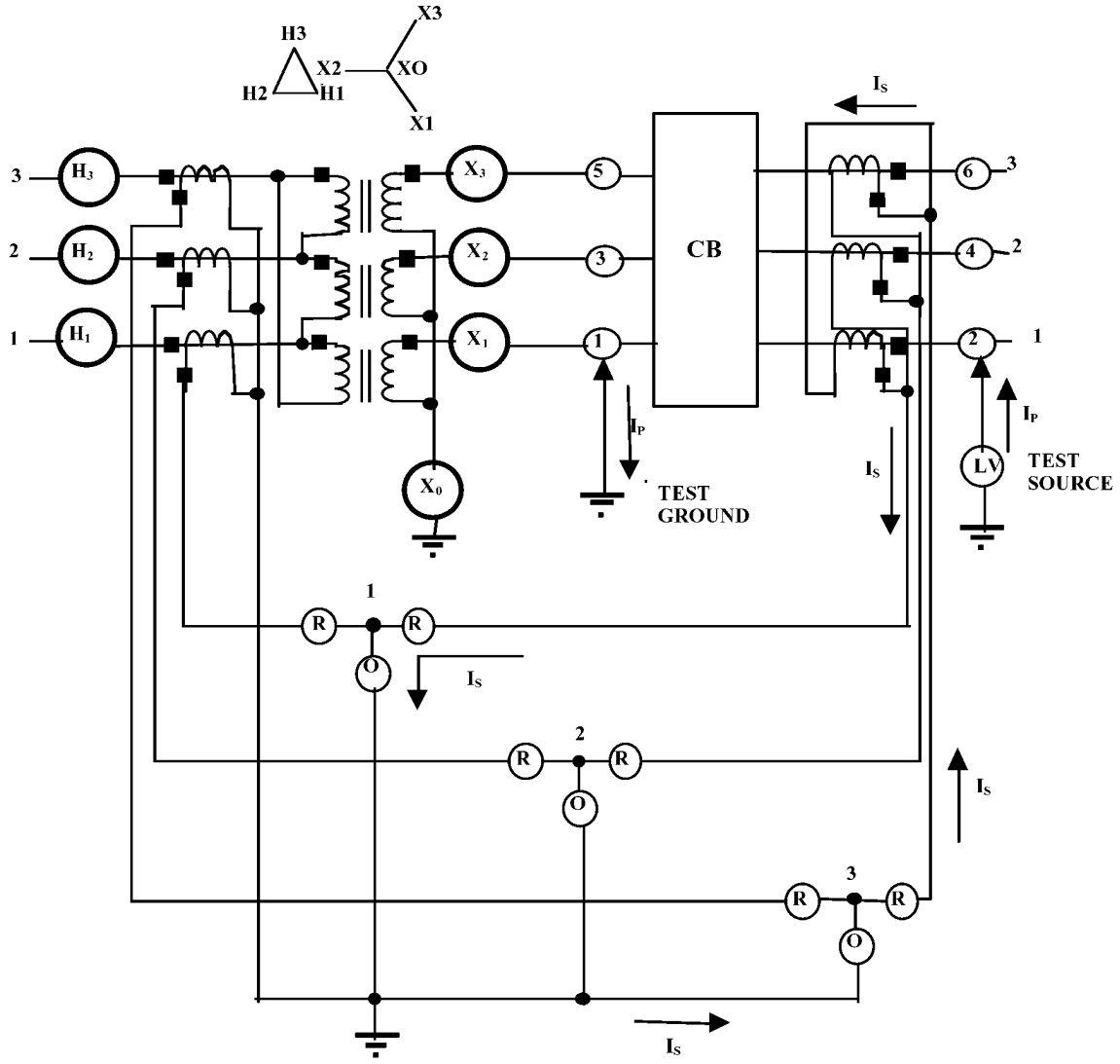

Figure 6—Transformer differential-primary current injection-CTs in circuit breaker (see 9.1.1)

9.1.2 CTs located in the transformer

The current source should be connected to the bushing to be checked with all other bushings tied together and grounded as shown in Figure 7. The impedance seen by the test source will, thus, be as low as possible and will allow sufficient current to flow during the test. As in the previous test, a phase-angle meter should be used to verify the polarity of the current in each restraint winding.

Copyright © 2004 IEEE. All rights reserved.
Copyright The Institute of Electrical and Electronics Engineers, Inc.
Provided by IHS under license with IEEE
No reproduction or networking permitted without license from IHS
Not for Resale

9.1.3 Three-phase primary current injection

A three-phase current source is connected to the three phases of the circuit breaker or transformer bushings, switching device, or bus at the open end of the high-voltage system. At the other end of the high-voltage system, the phases are tied together and grounded. The impedance seen by the current source will be as low as possible to allow sufficient currents to flow. The three-phase current source should be sized to deliver sufficient current through the transformer and test source. With balanced three-phase currents flowing through the CT secondary circuits, all current phasors may be measured, using a phase-angle meter and ammeter. The magnitude and angle of each current may be calculated before the test and confirmed from the measured quantities.

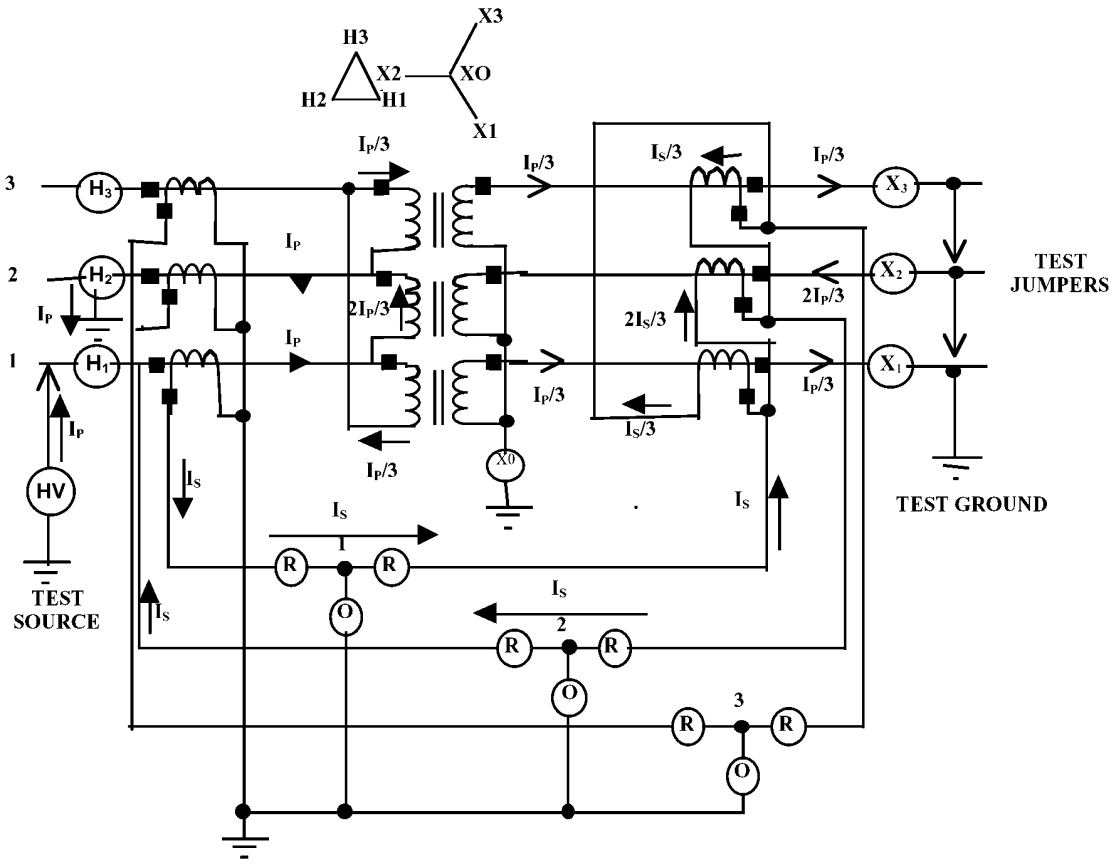

LEGEND
HV - PRIMARY INJECTION TEST SOURCE (HIGH VOLTAGE)
O - OPERATING COIL
R - RESTRAINING COIL

Figure 7—Transformer differential-primary current injection-CTs in power transformer (see 9.1.2)

9.2 Secondary current injection tests

The main advantage of this method is that a high-current source is not required (see Figure 8 and Figure 9). One drawback is that it does not completely check the secondary connections of the CTs. Additional testing may be required to completely verify the wiring. If the CTs are provided with shorting-type terminal strips in the same cabinet, this method, along with visual inspection of the wye or delta connection of the CTs,

Copyright © 2004 IEEE. All rights reserved.

Copyright The Institute of Electrical and Electronics Engineers, Inc.
Provided by IHS under license with IEEE
No reproduction or networking permitted without license from IHS
Not for Resale

should provide adequate proof of wiring. Before secondary injection testing is started, the CTs must be checked for appropriate transformation ratio and polarities by conventional methods. After this has been completed (see Figure 8, Method 1), the current source should be connected to the specified phase terminal of the CT. The current will flow from the current source through the relay restraint and operate windings to the CT ground (see Figure 8). A phase-angle meter referenced to the voltage supplying the current test source will verify the wiring from the specified phase terminal of the CT. This check should be made for each phase for both delta- and wye-connected CTs. For Method 2 (see Figure 9), where the CTs are connected in wye, it is important to check the neutral connection from the CT to the point at which it is tied to ground. This is done by injecting the test current in the neutral terminal of each CT. Since the current cannot flow through the CT (high-impedance path), this will verify the neutral connection.

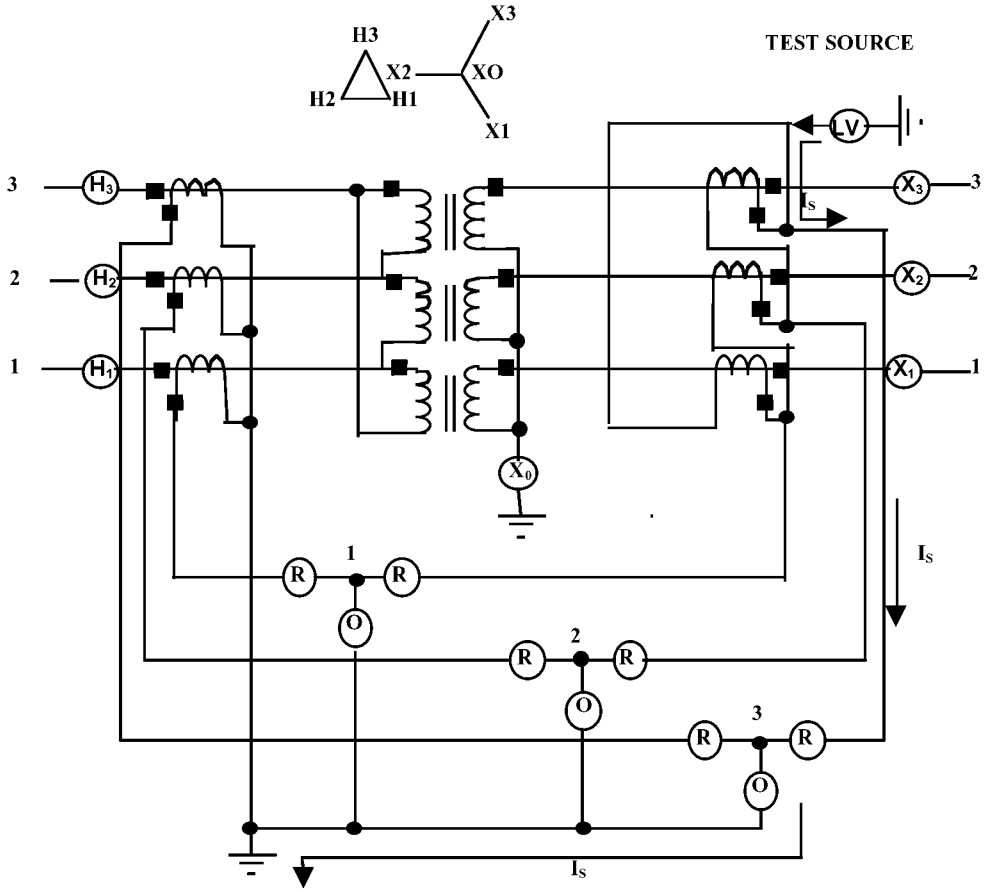

LEGEND
LV - SECONDARY INJECTION TEST SOURCE (LOW VOLTAGE)
O - OPERATING COIL
R - RESTRAINING COIL

Figure 8—Transformer differential-secondary current injection—Method 1 (see 9.2)

Copyright © 2004 IEEE. All rights reserved.
Copyright The Institute of Electrical and Electronics Engineers, Inc.
Provided by IHS under license with IEEE
No reproduction or networking permitted without license from IHS
Not for Resale

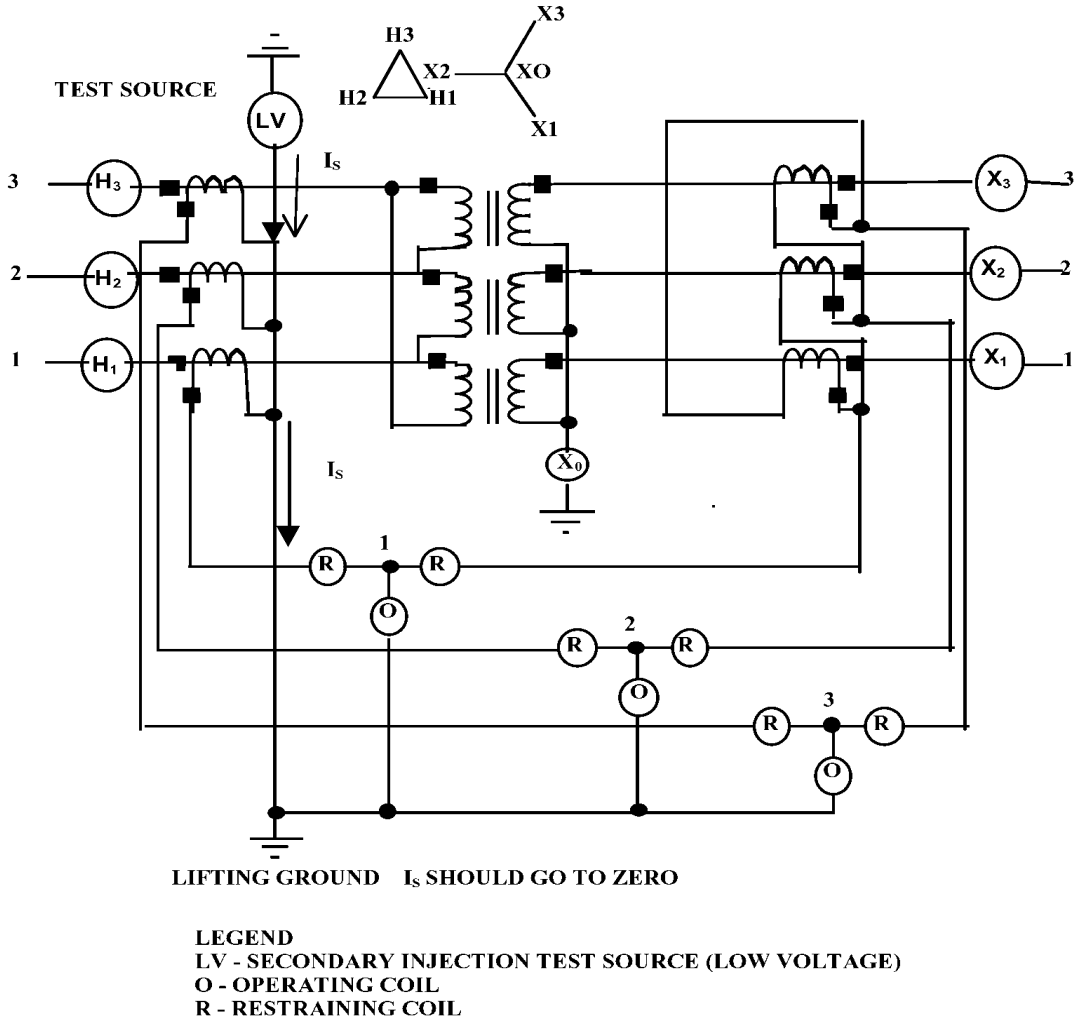

Figure 9—Transformer differential-secondary current injection—Method 2 (see 9.2)

9.3 In-service tests

After primary or secondary injection testing has successfully been completed, the transformer may be energized. The differential relays should be in service when the transformer is energized. A final test should be made as soon as the transformer can carry load. This load should be limited to 10% of the transformer rating to avoid tripping if the circuits are not connected correctly. Where it is not practical to limit the transformer load to 10% of rating, the differential relays may be disabled when load is added until it is determined that the relay currents are properly balanced. The configuration of the CT differential circuit must be considered when performing in-service tests. There are transformer differential relays, such as microprocessor-based relays, which do not use operate and restraint windings to receive the current contributions from each CT. However, the in-service checks should verify that the appropriate CT is supplying the corresponding relay element.

The currents in the restraint and operate circuits of each relay should be checked. The ratio of the measured currents should be nearly the same as the ratio of the relay settings (transformer tap changes will change the measured current ratio). While current in the relay operate circuit does not necessarily indicate improper current matching or incorrect wiring connections, it should be carefully analyzed by checking all CT secondary currents with the ammeter and phase-angle meter. When the current in the relay operate circuit

Copyright © 2004 IEEE. All rights reserved.

Copyright The Institute of Electrical and Electronics Engineers, Inc.
Provided by IHS under license with IEEE
No reproduction or networking permitted without license from IHS
Not for Resale

cannot be positively accounted for, the transformer should be taken out of service and the CT ratios, CT connections, and relay settings checked. It should be noted that in-service load tests might not detect shorted CTs. The low impedance of the restraint windings may result in nearly normal currents to appear in the restraint windings of the short-circuited CTs. Therefore, injection testing is recommended as a prerequisite to the in-service tests. When the in-service test is successfully completed, no further checking should be necessary.

10. Potential-polarized phase relays

The current and potential wiring of potential-polarized phase relays can be checked prior to energizing the circuit by either primary or secondary injection test. An in-service test can and should be performed as soon as adequate load is applied.

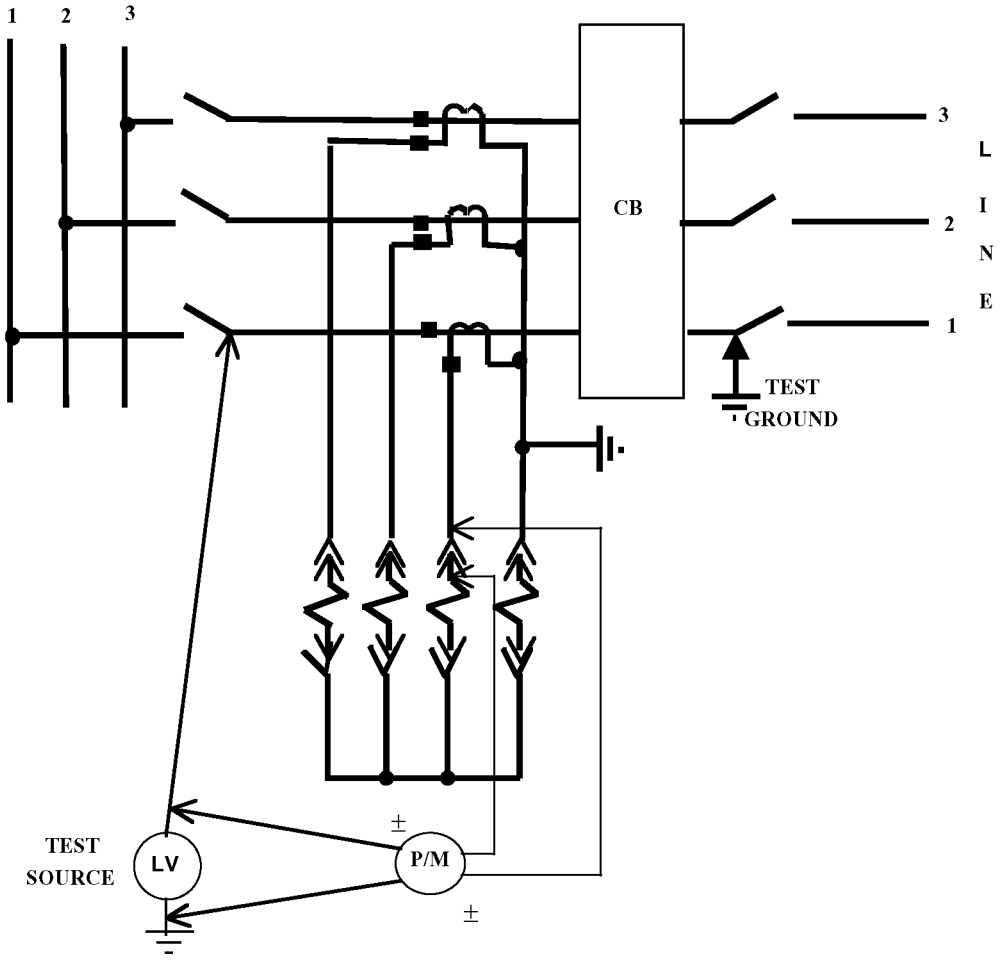

LEGEND
CB - CIRCUIT BREAKER
LV - PRIMARY INJECTION TEST SOURCE (LOW VOLTAGE)
P/M — PHASE ANGLE METER

Figure 10—Directional phase relay, current circuit-primary current injection (see 10.1)

Copyright © 2004 IEEE. All rights reserved.
Copyright The Institute of Electrical and Electronics Engineers, Inc.
Provided by IHS under license with IEEE
No reproduction or networking permitted without license from IHS
Not for Resale

10.1 Primary current injection tests

The circuit shown in Figure 10 may be used for the primary injection test; a low-voltage source should be applied to Phase 1 CT primary terminal on the source side of the circuit breaker of the protected line. A ground must be placed on the Phase 1 CT primary terminal on the line side; the circuit breaker should be closed, and the breaker isolation disconnect switches should be open. Sufficient secondary current must be provided so that a phase-angle meter can be used to check polarity at the relay. The reference should be the voltage of the test source. Phases 2 and 3 should be tested in the same manner.

Configurations such as ring bus, breaker-and-a-half, and double breaker schemes usually have more than one set of CTs. Where more than one set of CTs serve the relays, it will be necessary to test all the CTs.

10.2 Secondary injection tests

10.2.1 Current-circuit current injection tests

The advantage of secondary injection tests over primary injection tests (see Figure 11) is that a high-current source is not required. There is a disadvantage in that the ratio and polarity of the CTs are not checked and must be verified by conventional methods (see Clause 5). After those checks have been completed, the secondary injection test source (low voltage) should be connected between the CT terminal of a selected phase and ground. The current will flow from the current source through the relay coils to the CT circuit ground. A phase-angle meter referenced to the voltage developed by the current test source and an ammeter will verify the presence as well as the direction of current in the circuit. It will confirm correct wiring for that phase of the relay. Each phase should be tested in the same manner.

The foregoing test does not check the integrity of the CT secondary ground connection. To check this part of the circuit, the secondary injection test source (low voltage) should be connected to the neutral terminal of each CT. Since the current cannot flow through the high-impedance path of the CT, the flow of current to ground will verify the neutral connection.

10.2.2 Current-circuit voltage injection tests

An alternate method of testing correctness of wiring in typical current circuits is shown in Figure 12. A resistance voltage divider (such as a series connection of 5 low-wattage 120 V ac light bulbs) is used to inject current-limited, well-defined voltage magnitudes into each phase and neutral branch of the current circuit. Note that the normal intentional safety ground must be disconnected during the test, since the test voltage source is referenced to ground. Also, any low-impedance connections between phases (such as the wye point junction) must be opened. This can usually be easily accomplished by opening test devices, as shown in Figure 12, or by opening test facilities in the last relays just prior to the wye point. A voltmeter referenced to ground can be used to check for proper ac voltages at every device terminal in the Phase 1 circuit (96 V), Phase 2 circuit (72 V), Phase 3 circuit (48 V), and the neutral circuit (24 V). The correct polarity of connections can be determined by opening the relay circuit, for example between terminals M and N, and reading the voltages on each terminal. Correct polarity in this example would be indicated with 96 V ac on N and 24 V ac on M. Any wiring errors that might exist should cause no damage to devices because of the current limiting effect of at least two resistances (light bulbs) in series.

NOTE—Circuits with auxiliary CTs require that tests in both the primary and secondary circuits of the auxiliary CTs be performed.

Copyright © 2004 IEEE. All rights reserved.

Copyright The Institute of Electrical and Electronics Engineers, Inc.
Provided by IHS under license with IEEE
No reproduction or networking permitted without license from IHS
Not for Resale

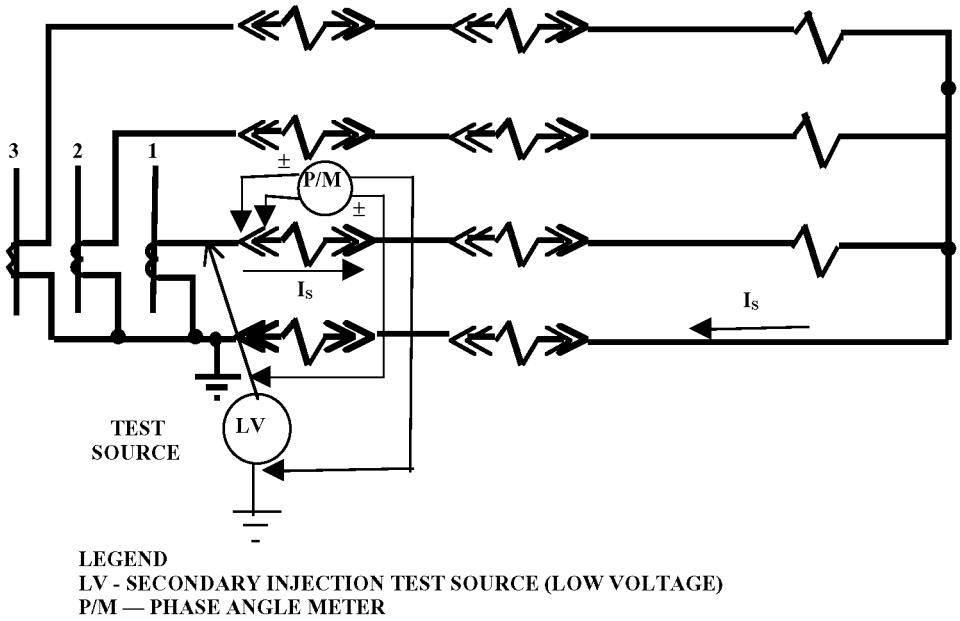

Figure 11—Directional phase relay, current circuit-secondary current injection (see 10.2.1)

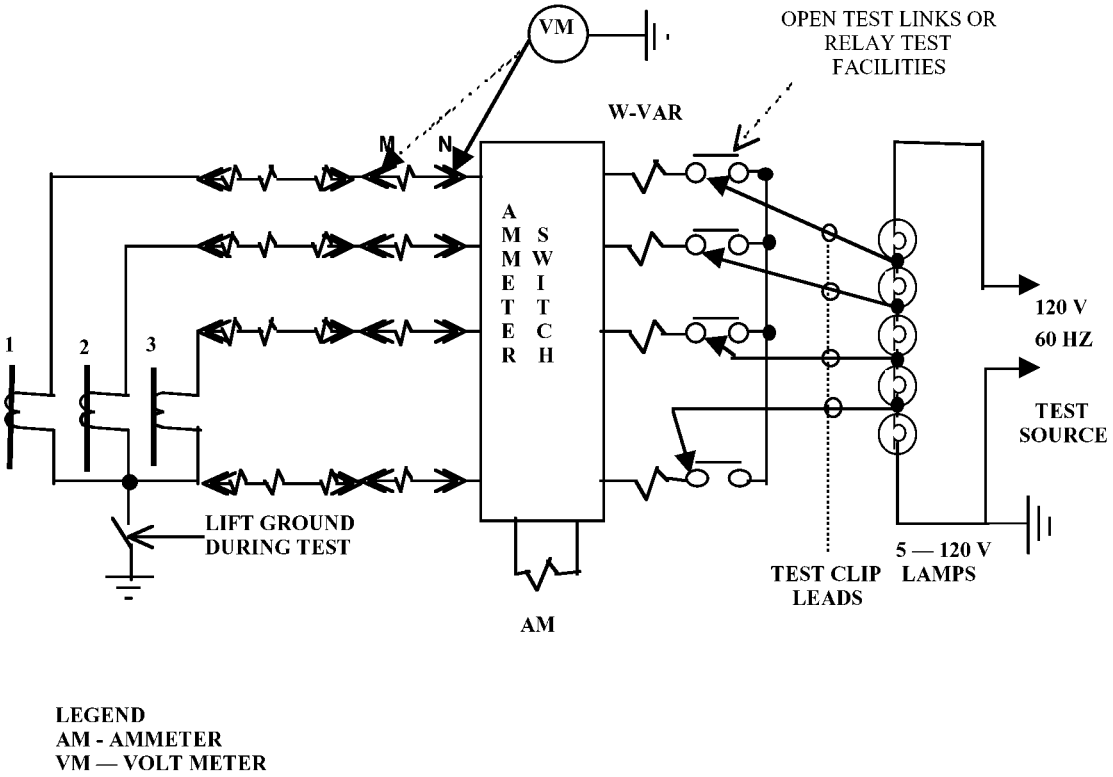

Figure 12—Directional phase relay, current circuit-secondary voltage injection (see 10.2.2)

Copyright © 2004 IEEE. All rights reserved.
Copyright The Institute of Electrical and Electronics Engineers, Inc.
Provided by IHS under license with IEEE
No reproduction or networking permitted without license from IHS
Not for Resale

10.2.3 Voltage-circuit voltage injection tests

Typical voltage secondary circuit wiring (see Figure 13, Method 1) can be tested for correctness in a manner similar to that described for typical current circuits in 10.2.2. The resistance voltage divider test circuit, which was used for the current circuit test in Figure 12, may be used for a voltage-circuit test as illustrated in Figure 13 (Method 1). Note, however, the caution stated on Figure 13, to prevent backfeed of voltage transformers and sustained secondary output voltages from the wye-broken delta circuit. Correct connections to all terminals of all voltage circuit devices may be verified by checking the presence of the proper injected voltage at each branch of the circuit, including the neutral. As stated in 10.2.2 for the current circuit test by this method, wiring errors (short circuits, etc.) should cause no damage because of the current limiting feature of the voltage divider test source.

Another method (Method 2) for checking the voltage circuit of directional phase (and ground) relays is shown in Figure 14. The circuit to be tested must be disconnected from the source devices by opening the test switch or removing the fuses, etc. The circuit should be checked for short circuits with an ohmmeter. Temporary grounds should be placed on Phases 2 and 3 to eliminate backfeed through delta-connected loads; this should be modified if the nature of load so dictates. An ac voltage of operating value, normally 67 V, may be applied between Phase 1 and ground. (A good method would be to use a fused variable voltage transformer, gradually increasing the value to normal.) Phase 1 connections are verified by reading the voltage on all terminals that should be connected to Phase 1. Zero voltage should be checked on Phase 2 and Phase 3 device terminals. Each phase can be tested in turn by applying the source to that phase, grounding the other two phases, and repeating the above procedure. The neutral circuit can be tested in a similar manner. The ground relay should be removed, the three-phase wires should be grounded and the ground removed from the neutral wire. The test voltage is applied to the neutral wire and all proper relay terminals tested for this voltage.

Warning

Failure to disconnect the ground relay from the polarizing voltage circuit during this neutral circuit test will result in typically three times the test voltage. An even higher voltage may be experienced, depending on the auxiliary transformer ratio.

10.3 In-service tests

The phase sequence and voltage balance of the three-phase secondary voltages should be checked when the voltage transformers are first energized.

Final acceptance tests of the potential-polarized phase relays should be conducted with the protected transmission line energized and carrying load. Before relay testing can begin, the direction of real and reactive power flows in the protected line must be determined in some manner. The best way to establish power flow direction is to arrange to have the transmission line carry load radially by opening downstream sources. A long line or a cable can be checked with charging current only. Readings taken from previously checked meters can also be used to establish direction of real and reactive power flows.

When the direction of power flow has been verified, readings of current, voltage, and phase angle may be taken at the relay terminals. These readings should be similar to those that would be read by using the relay connections shown in the relay manufacturer's instruction book but modified for the actual load flow condition.

The CT and VT ratios can be checked by calculating the real and reactive power flows from the values measured at the relay**.** If they agree with the previously determined values, then they are correct. For electromechanical relays, the directional unit torque and contact position should agree with that expected from the input conditions. If these conditions are very near the zero torque point, the load should be changed for obtaining a positive indication.

Copyright © 2004 IEEE. All rights reserved.

Copyright The Institute of Electrical and Electronics Engineers, Inc.
Provided by IHS under license with IEEE
No reproduction or networking permitted without license from IHS Not for Resale

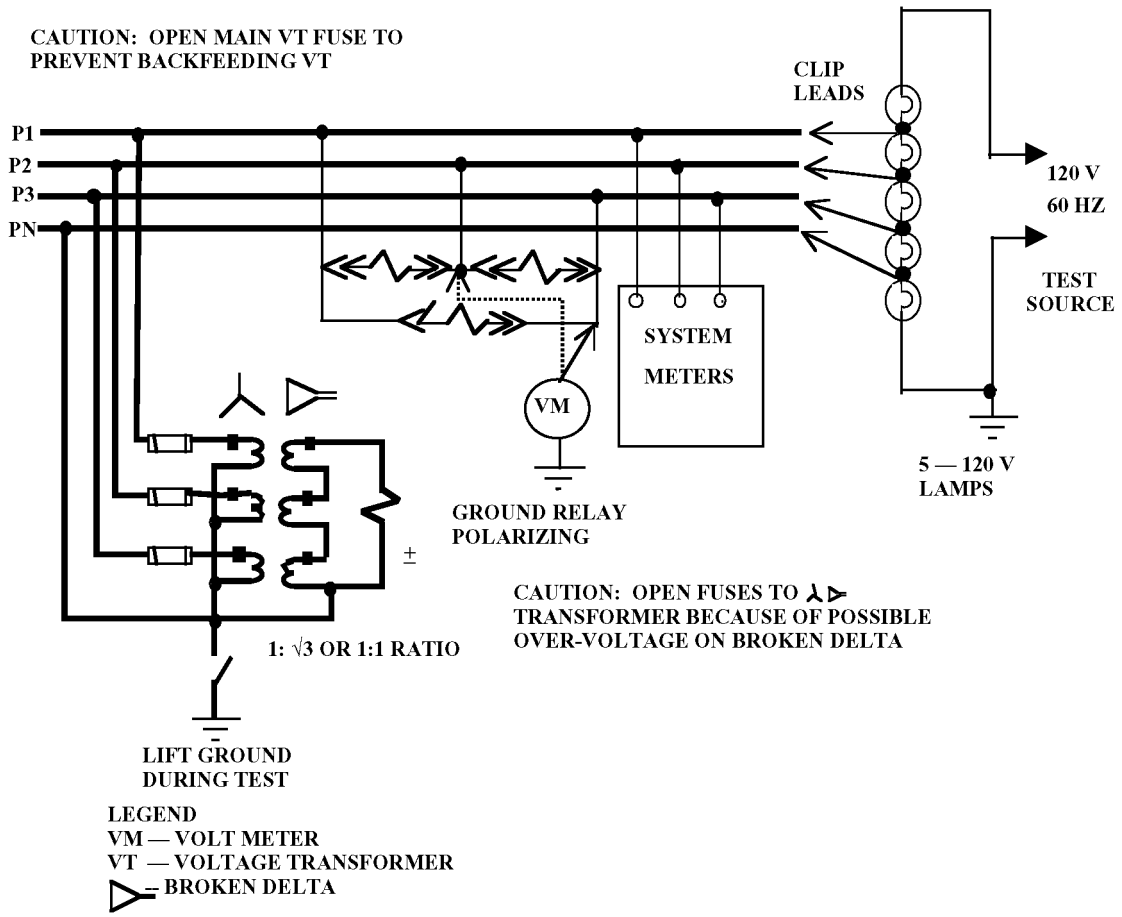

Figure 13—Directional phase relay, voltage circuit-secondary voltage injection—Method 1 (see 10.2.3)

11. Potential-polarized ground relays

Like the potential-polarized phase relays, initial tests of potential polarized ground relays generally consist of verifying current circuit wiring by primary or secondary injection techniques as described in 10.1, 10.2.1, and 10.2.2 and verifying voltage circuit with voltage circuit injection described in 11.1 (this test is conceptually similar to that described in 10.2.3). Before energizing the line or protected equipment, the operation of the relays should have been verified by acceptance and calibration tests. It is suggested that, if necessary, the directional element contacts be blocked closed during initial energization to ensure tripping if a fault occurs during initial energization.

11.1 Voltage-circuit secondary voltage injection test

Method 1 of 10.2.3 (see Figure 13) that is suggested for verifying the wiring of the phase-voltage circuits can be conveniently used to verify the correctness of the wiring of the ground relay voltage circuit as well (see Figure 15, Method 1). Connection of the voltmeter, as shown in Figure 15, from the nonmarked-polarity terminal of the relay to the load side of the inserted fuse (or closed test device) and inserting only the Phase 1 fuse momentarily (less than 10 seconds if the rated ac output is less than the 125 V) will confirm the correctness of the wiring of this phase. The measured voltage of Phase 1 should be

$$(96 - 24) \times 1.732 - (96 - 24) = 53 \text{ V}$$

Copyright © 2004 IEEE. All rights reserved.
Copyright The Institute of Electrical and Electronics Engineers, Inc.
Provided by IHS under license with IEEE
No reproduction or networking permitted without license from IHS
Not for Resale

Similarly, the measurement for insertion of only the Phase 2 fuse should provide an ac voltage of

$(1.73 - 1) \times 48 = 35$ V

Measurement for the Phase 3 fuse should provide an ac voltage of

$(1.73 - 1) \times 24 = 18$ V

NOTE—If an auxiliary voltage transformer ratio of 1:1 is used, the voltmeter should read essentially zero.

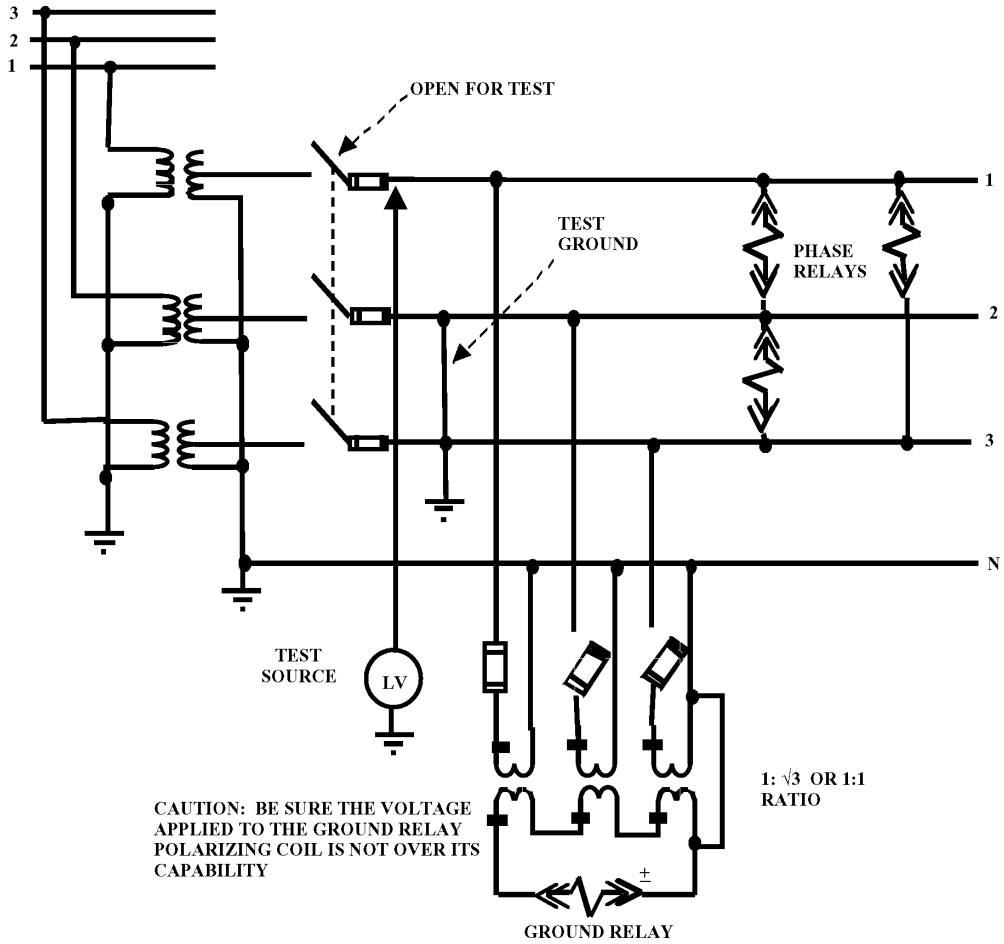

Figure 14—Directional phase and ground relay, voltage circuit-secondary voltage injection—Method 2 (see 10.2.3)

Method 2 of 10.2.3 (see Figure 14) that is suggested for verifying the wiring of the phase-voltage circuits can also be conveniently used to verify the correctness of the wiring of the ground relay voltage polarizing circuit. Connection of the voltmeter, as shown in Figure 16, from the relay nonmarked-polarity terminal of the relay to the load side of the inserted fuse (or closed test device) and momentary (less than 10 seconds if rated ac output is less than 125 V) insertion of only the Phase 1 fuse will confirm the correctness of the wiring of this phase. Note that the LV source is 67 V ac. The measured voltage of Phase 1 should be

$(1.73 - 1) \times 67 = 49$ V

Similarly, the measured voltage for insertion of the fuse of only Phases 2 or 3 should yield the same result.

Copyright © 2004 IEEE. All rights reserved.

Copyright The Institute of Electrical and Electronics Engineers, Inc.
Provided by IHS under license with IEEE
No reproduction or networking permitted without license from IHS
Not for Resale

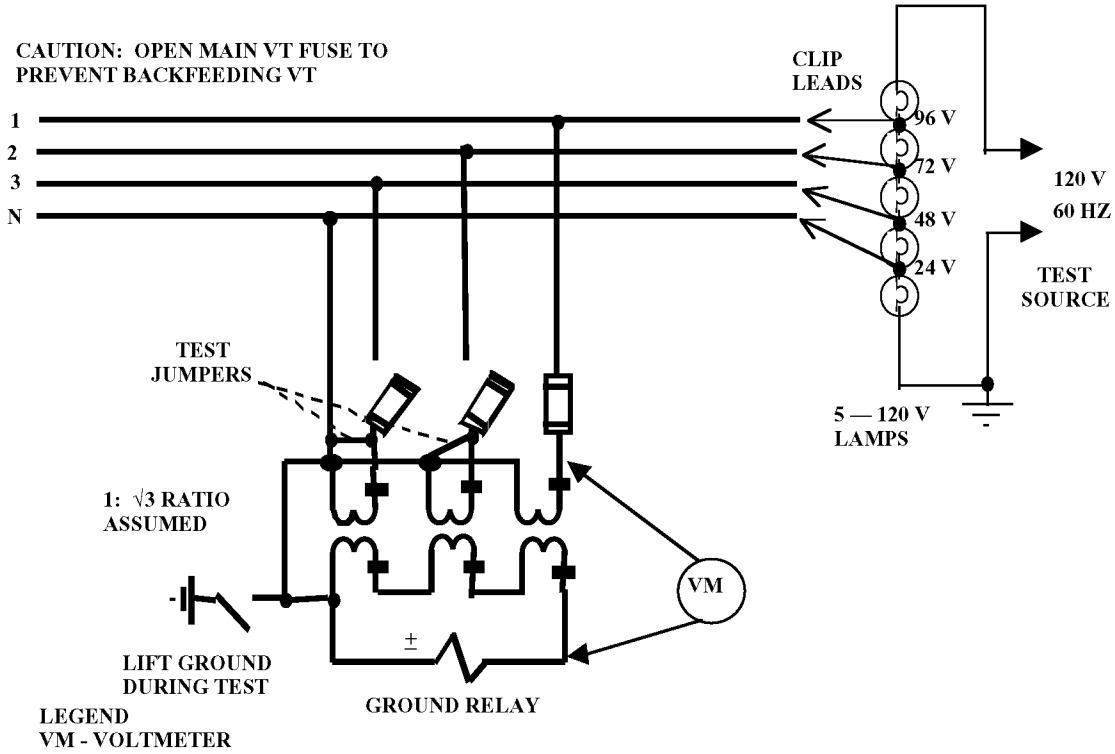

Figure 15—Directional ground phase relay, voltage circuit-secondary voltage injection—Method 1 (see 11.1)

11.2 In-service tests

Final acceptance tests of the potential-polarized ground relay should be conducted with the protected transmission line energized and carrying load. Before relay testing can begin, the direction of real and reactive power flows in the protected line must be determined in some manner. A recommended method to establish power flow direction is to arrange to have the transmission line carry load radially by opening downstream sources. A long line or cable can often be tested by closing one end and using only the charging current to verify the power flow. If the protected line is one of a pair of parallel lines, readings taken in its previously established twin can be used to make the determination. The basic method of testing is to simulate a single-phase-to-ground fault on a radial line by causing the faulted phase voltage to collapse to zero and the unfaulted phase currents to become zero.

NOTE—Appropriate action should be taken with other ground relays that are polarized from this potential source during the tests. This action may include actions, such as blocking the trip circuits or blocking the directional elements closed.

Starting with balanced three-phase voltages applied to the ground relay as shown in part (a) of Figure 17, voltage V_1 can be removed from the polarizing coil by pulling the fuse in Phase 1 of the primary winding of the polarizing VT. This condition can also be alternately simulated by opening the test link and connecting the jumper as shown in part (a) of Figure 17. The unbalanced voltage (V_R) applied to the polarizing coil will now become $-(V_2 + V_3)$. Since the system voltages are balanced ($V_1 + V_2 + V_3 = 0$), then $-(V_2 + V_3) = V_1$. This is the voltage applied to the relay as shown in part (c) of Figure 17. Phase 2 and Phase 3 currents now need to be shorted to neutral, and paths to the current coils of the relay need to be opened at a convenient location as shown in part (b) of Figure 17. The ground relay under test is now receiving the currents and voltages that simulate a Phase 1-to-ground fault. Part (d) of Figure 17 shows the relay operating characteristic for a unity power factor flow in the tripping direction. A relay maximum torque angle of 60°, I lagging E, is assumed in this case for convenience.

Copyright © 2004 IEEE. All rights reserved.
Copyright The Institute of Electrical and Electronics Engineers, Inc.
Provided by IHS under license with IEEE
No reproduction or networking permitted without license from IHS
Not for Resale

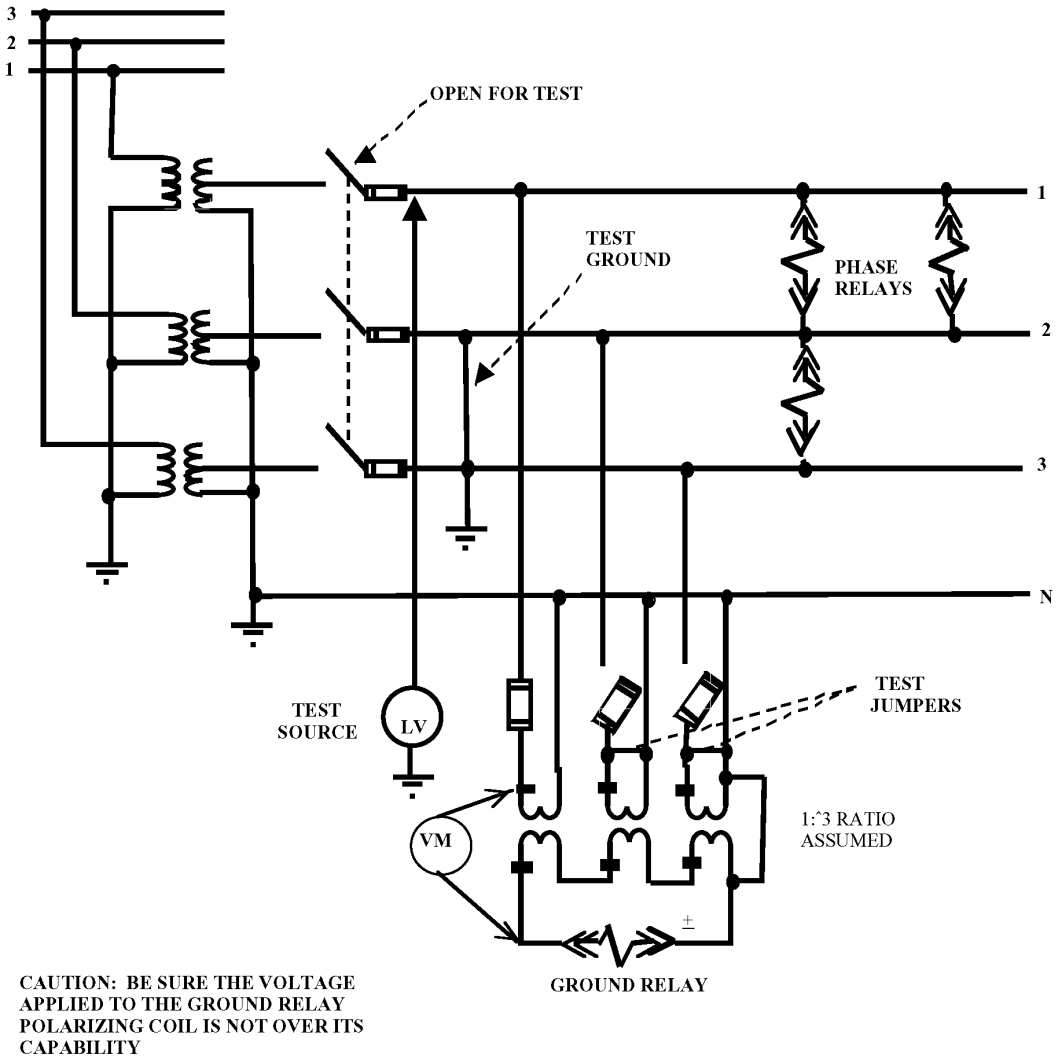

Figure 16—Directional ground relay, voltage circuit-secondary voltage injection—Method 2 (see 11.1)

The secondary current (in the ground relay) and its phase angle with respect to relay voltage (V_R), should be measured to verify that the relay is receiving effectively the Phase 1 quantities shown in Figure 17. For an electromechanical relay, the directional contact should close with good torque for the conditions shown in Figure 17 or as determined from the actual load flow conditions. If these conditions are very near the zero torque point, a shift in load should be made for a positive indication. The test may be repeated for Phases 2 and 3 to further verify proper voltage transformer phasing connections and the relationships to current circuits.

Warning

Care must be taken to restore current transformer circuits before shorting means are removed after each test. Current and voltage to the relay should then be verified to be near zero.

Copyright © 2004 IEEE. All rights reserved.

Copyright The Institute of Electrical and Electronics Engineers, Inc.
Provided by IHS under license with IEEE
No reproduction or networking permitted without license from IHS
Not for Resale

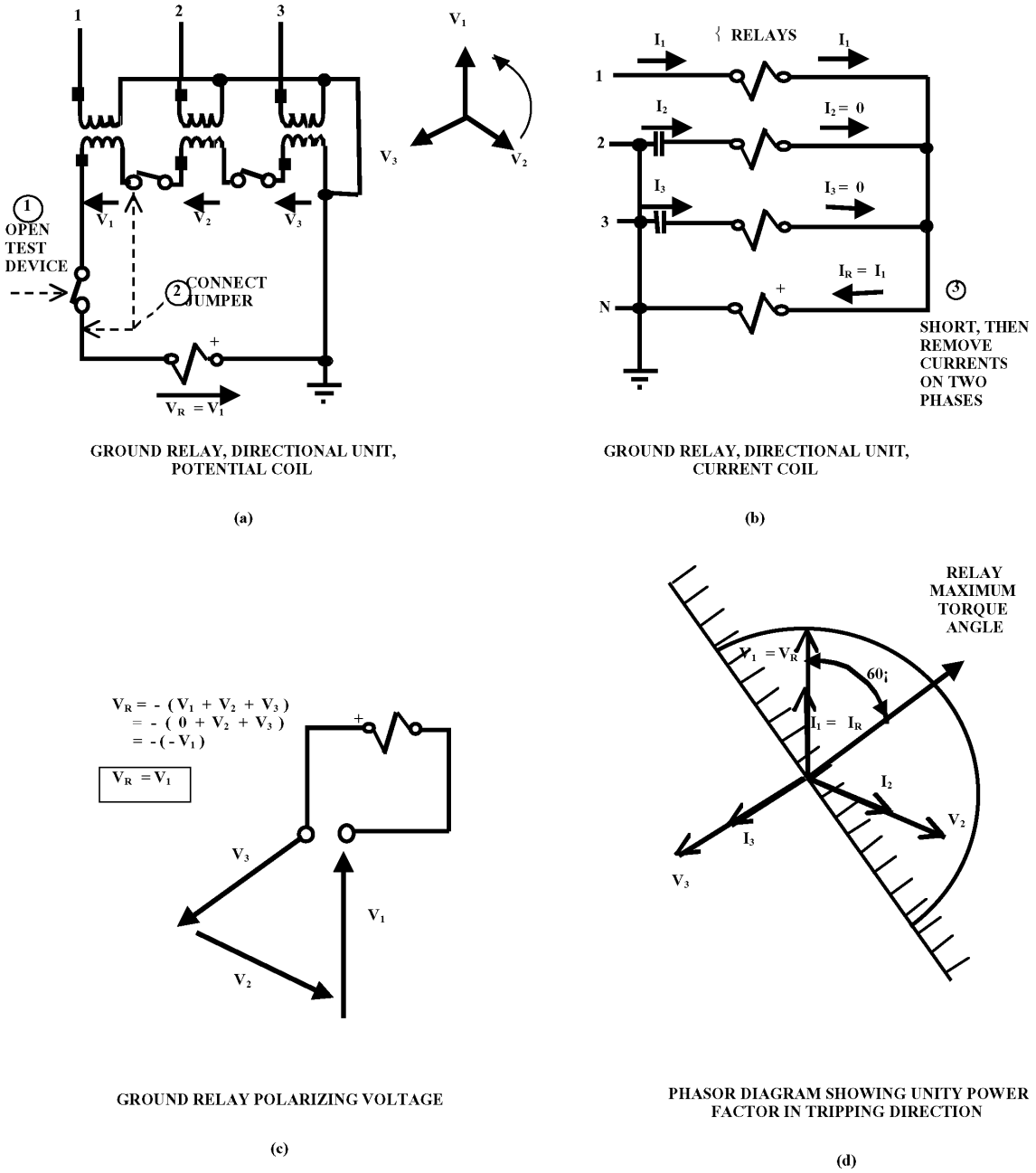

Figure 17—Directional ground relay, directional check, in-service quantities (see 11.2)

Since under a balanced load condition $I_1 + I_2 + I_3 = 0$ and $I_2 + I_3 = -I_1$. By removing Phase 1 current and allowing the relay to receive $I_2 + I_3$, a Phase 1-to-ground fault in the opposite direction to the actual power flow can be simulated. While this method is easier to physically perform, the former method is more commonly understood.

Copyright © 2004 IEEE. All rights reserved.
Copyright The Institute of Electrical and Electronics Engineers, Inc.
Provided by IHS under license with IEEE
No reproduction or networking permitted without license from IHS
Not for Resale

12. Neutral-current-polarized ground relays

Primary or secondary injection techniques may be used for verifying current circuits of transformer neutral-current-polarized ground relays. As previously mentioned in this guide, if secondary injection is to be used, CT ratio and polarity tests should be performed first. Primary injection techniques are subsequently illustrated and explained for a typical delta-wye transformer. If multiple transformers are used for the polarizing source, their neutral CTs are paralleled. Polarity of these sources should be checked one at a time. This can be accomplished by open-circuiting all external connections of the transformer not being tested. If the substation configuration permits, the transformer whose neutral CTs are not being tested may be in service serving other circuits. If this is done, it should be verified that there is no current in the polarizing circuit from the in-service transformer.

12.1 Primary current injection tests—primary of all CTs accessible

Figure 18 shows the application of single-phase current through the primary windings of the CTs. A source of test current is applied between points A and B and a ground applied on one phase at point C. With the circuit breaker closed, current is injected through the primary of the phase CT and the neutral CT. It may be possible to inject sufficient current to actually operate the ground relay and check for correct operation. If it is not possible to inject enough current to operate the relay, the phase relationship of the operate current and the polarizing current may be checked to verify the relay connections. The test should be repeated for the other two phases.

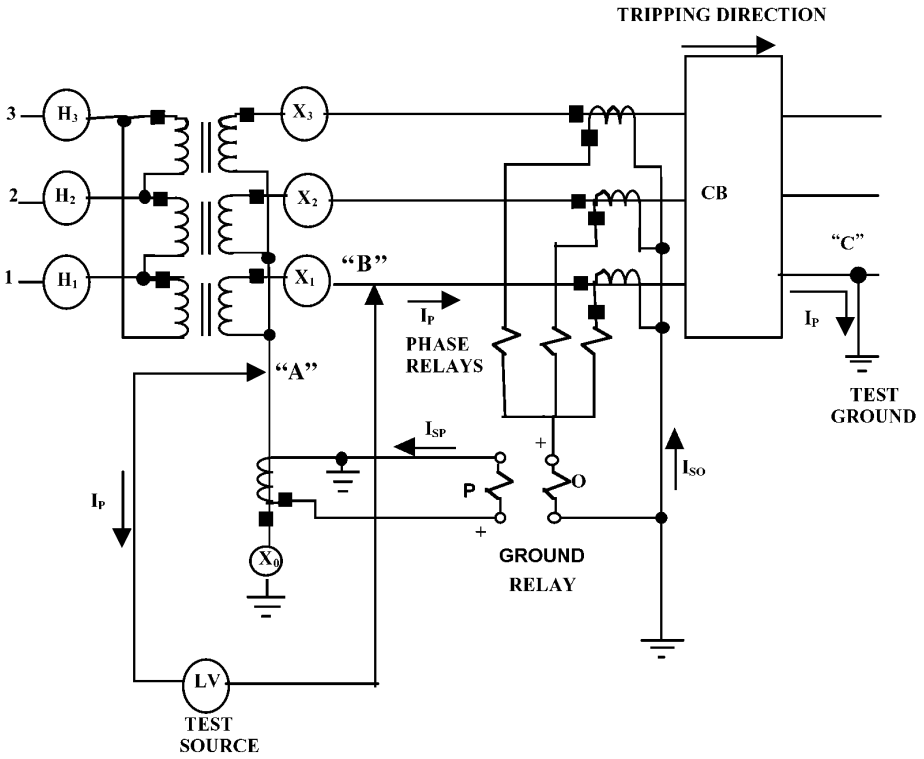

Figure 18—Directional ground relay (current polarized-transformer neutral current transformer), current polarized circuit, primary current injection—Method 1 (see 12.1)

Copyright © 2004 IEEE. All rights reserved.

Copyright The Institute of Electrical and Electronics Engineers, Inc.
Provided by IHS under license with IEEE
No reproduction or networking permitted without license from IHS
Not for Resale

Figure 19 shows the application of single-phase current through all three phases. Test connections are similar to Figure 18, except that all three phases are shorted together at points B and C. This connection simulates $3I_0$ in the relay. Proper directional operation can be verified in the manner explained in the preceeding paragraph with reference to Figure 18.

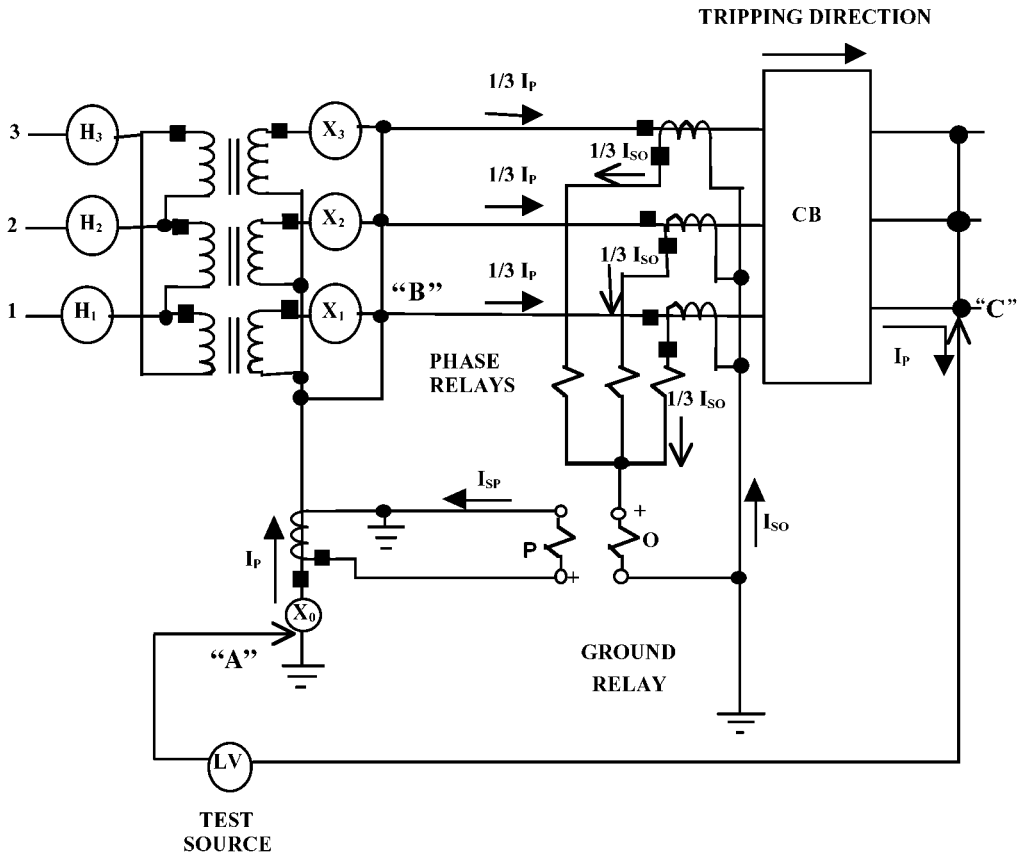

LEGEND
CB — CIRCUIT BREAKER
LV - PRIMARY INJECTION TEST SOURCE (LOW VOLTAGE)
O - OPERATING COIL
P - POLARIZING COIL

Figure 19—Directional ground relay (current polarized-transformer neutral current transformer), current polarized circuit, primary current injection—Method 2 (see 12.1)

12.2 Primary current injection tests—primary of neutral CT not accessible

Figure 20 shows the application of single-phase current through the primary windings of the CT and the power transformer. A source of test current is applied between points A and B. The primary terminals should be shorted together at point C. With the circuit breaker closed, current is injected through the neutral CT in the same direction. It may be possible to inject enough current to operate the ground relay and check for correct operation. If not, it is possible to verify the relay connections with low levels of currents in the relay circuits by measuring the phase relationship of the operating and polarizing currents in the relay. Similarly, the test should be made by applying current to each of the other two phases.

--`,,`,`-`-`,,`,,`,`,,`---
Copyright © 2004 IEEE. All rights reserved.
Copyright The Institute of Electrical and Electronics Engineers, Inc.
Provided by IHS under license with IEEE
No reproduction or networking permitted without license from IHS
Not for Resale

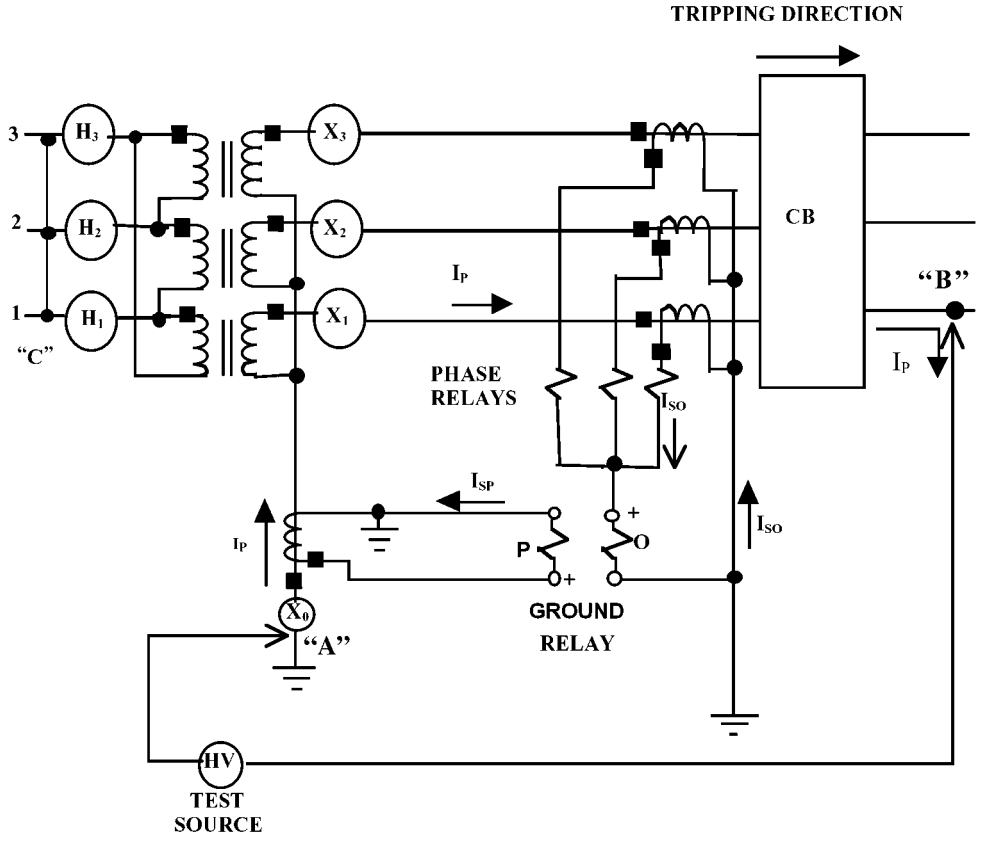

LEGEND
CB — CIRCUIT BREAKER
HV - PRIMARY INJECTION TEST SOURCE (HIGH VOLTAGE)
0 — OPERATING COIL
P - POLARIZING COIL

Figure 20—Directional ground relay (current polarized-transformer neutral current transformer), current polarized circuit, primary current injection—Method 3 (see 12.2)

Figure 21 shows the application of single-phase current through the primary windings of all CTs to simulate the zero-sequence currents. A source of test current is applied between points A and B. All three phases are shorted together at points B and C. With the circuit breaker closed, the same current is injected into all three phases which simulates $3I_0$ in the ground relay circuit. Again, proper operation of the relay can be verified by observing the operation of the relay contacts and/or measuring the phase relationship of the operating and polarizing currents.

Copyright © 2004 IEEE. All rights reserved.

Copyright The Institute of Electrical and Electronics Engineers, Inc.
Provided by IHS under license with IEEE
No reproduction or networking permitted without license from IHS
Not for Resale

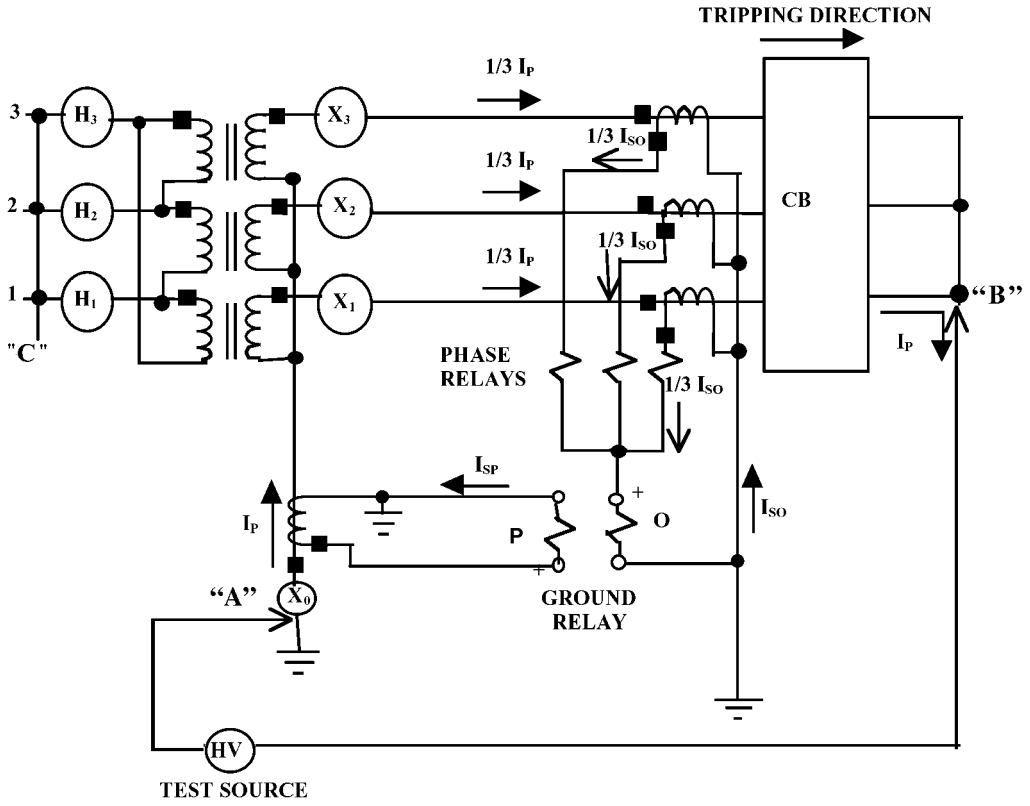

LEGEND
CB — CIRCUIT BREAKER
HV - PRIMARY INJECTION TEST SOURCE (HIGH VOLTAGE)
O — OPERATING COIL
P - POLARIZING COIL

Figure 21—Directional ground relay (current polarized-transformer neutral current transformer), current polarized circuit, primary current injection—Method 4 (see 12.2)

12.3 In-service tests for current polarized relays

Figure 22 shows the procedure that can be used for verifying the polarity of the polarizing current by comparing the peak of the third harmonic in the neutral current with one of the phase-to-neutral secondary voltages. The peak of the third harmonic should be positive at the point where the secondary voltage signal of any of the three phases is crossing zero in the positive direction, assuming that the current is being measured at the point where the polarizing current enters the marked terminal of the relays.

If there is not enough third harmonic current, increase the taps to overexcite the transformer. The polarizing current can be from the transformer neutral CT or from the tertiary CTs. There may be several transformers in parallel providing the polarizing current.

Figure 22 shows that the test equipment required is an oscilloscope, an isolation transformer, and a shunt or load box. The scope case should be isolated so that the relay coils are not short-circuited through the scope case. The angle of the third harmonic current relative to any one of the three phase-to-neutral voltages should be the same at any particular time, but can vary a few degrees depending on the degree of core saturation and the characteristics of the hysteresis loop. It does not matter if the delta is A-B or A-C for the phase relationship of the third harmonic current relative to the secondary voltages.

--`,,`,`-`-`,,`,,`,`,,`---
Copyright © 2004 IEEE. All rights reserved.
Copyright The Institute of Electrical and Electronics Engineers, Inc.
Provided by IHS under license with IEEE
No reproduction or networking permitted without license from IHS
Not for Resale

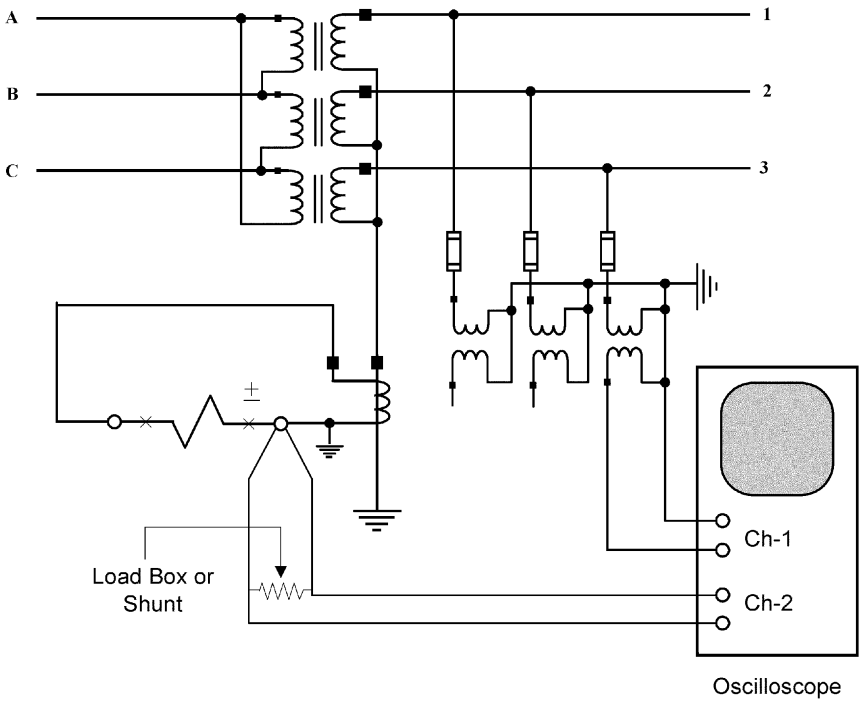

Figure 22—Verifying current polarization by phase relationship of third harmonic current and fundamental frequency voltage (see 12.3)

CAUTION
Scope case must be isolated so that the relay coils are not short-circuited.

Where there is a large rectifier, even harmonics appear and tend to confuse the picture. A 60-Hz component is normally very prominent in a three-phase transformer but less so if there are three single-phase transformers. This method does not prove if the ratio is correct. The primary injection tests and other commissioning tests should be used to verify that the ratio is correct. Fault recorder traces or the oscillographic information from the relays should verify the correctness of the ratio after the first fault.

NOTE—The simplest method of checking the polarity in a station that has relays in service and are working correctly is to compare the current flowing in the marked terminal of the new relay with the current flowing in the marked terminal of one of the operational relays. The polarity relative to each phase voltage should be the same for both relays.

13. Tertiary current polarized ground relays

Primary or secondary injection techniques may be used for verifying tertiary current circuits. If a secondary injection technique is used, it is necessary to conduct the ratio and polarity tests first. If the tertiary CT primary is not accessible, a dc test for polarity is usually required. Two methods of conducting primary injection tests for a three-phase autotransformer with ground relay polarized from the delta-connected tertiary winding are shown in Figure 23 and Figure 24.

Copyright © 2004 IEEE. All rights reserved.

Copyright The Institute of Electrical and Electronics Engineers, Inc.
Provided by IHS under license with IEEE
No reproduction or networking permitted without license from IHS
Not for Resale

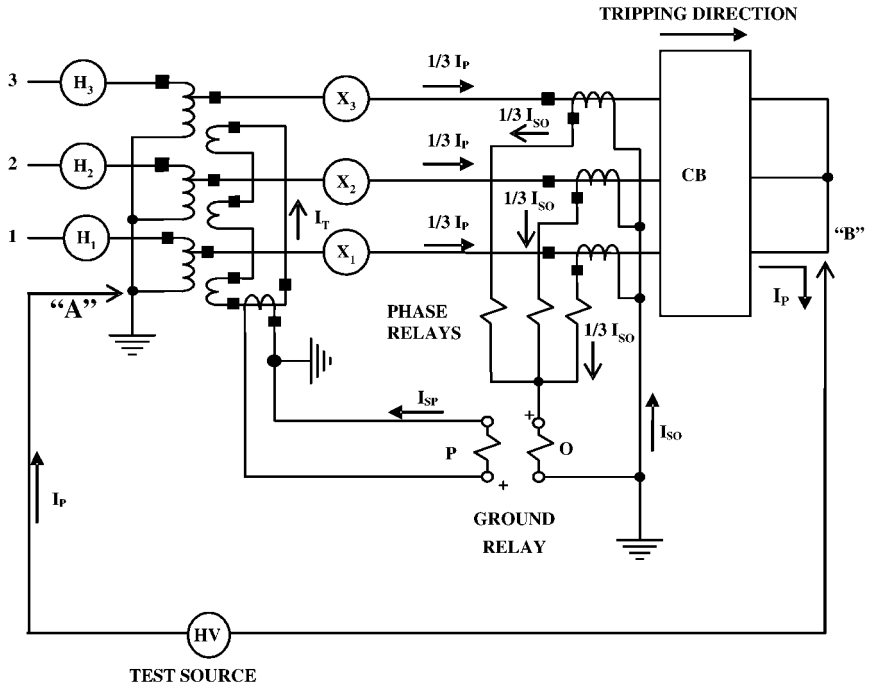

LEGEND
CB – CIRCUIT BREAKER
HV - PRIMARY INJECTION TEST SOURCE (HIGH VOLTAGE)
O – OPERATING COIL
P - POLARIZING COIL

Figure 23—Directional ground relay (current polarized-transformer tertiary current transformer), current polarized circuit, primary current injection—Method 1 (see 13.1.1)

NOTE—The test circuit connection in Figure 23 simulates a single phase-to-ground fault at point B with no zero-sequence source to the right of point B and no positive-sequence source to the left of the autotransformer. This causes closing torque on the directional element.

13.1 Primary current injection tests—tertiary CTs not accessible, breaker CTs accessible

13.1.1 Closing torque test (Method 1)

Figure 23 shows the application of single-phase current through the primary windings of the CT and the power transformer. A source of test current is applied between points A and B. All three phases should be shorted together at point B to allow currents to flow in the delta winding. With the circuit breaker closed, current is injected through the power transformer and the circuit breaker CTs, causing a current to flow in the delta winding. It may be possible to inject enough current to operate the ground relay and check for the correctness of the operation. In many cases, it will be difficult to inject the required level of current. Correct operation can still be verified by measuring the phase relationship of the operating current and the polarizing current. This test verifies that correct closing torque is developed by the directional element.

13.1.2 Opening torque test (Method 2)

Figure 24 shows the application of single-phase current through the power transformer to simulate zero-sequence currents in the relay circuits. A source of test current is applied to points A and B with all three phases shorted together at point A as well as at point B. With the circuit breaker closed, current is injected

Copyright © 2004 IEEE. All rights reserved.
Copyright The Institute of Electrical and Electronics Engineers, Inc.
Provided by IHS under license with IEEE
No reproduction or networking permitted without license from IHS
Not for Resale

into all three phases, which simulates $3I_0$ in the relay circuits. The proper operation of the relay can be verified by observing the operation of the relay contacts and/or measuring the phase relationship of the operating and polarizing currents. Calculations should be made to determine the anticipated magnitude and direction of current flow before performing these tests.

13.2 In-service tests

See 12.3.

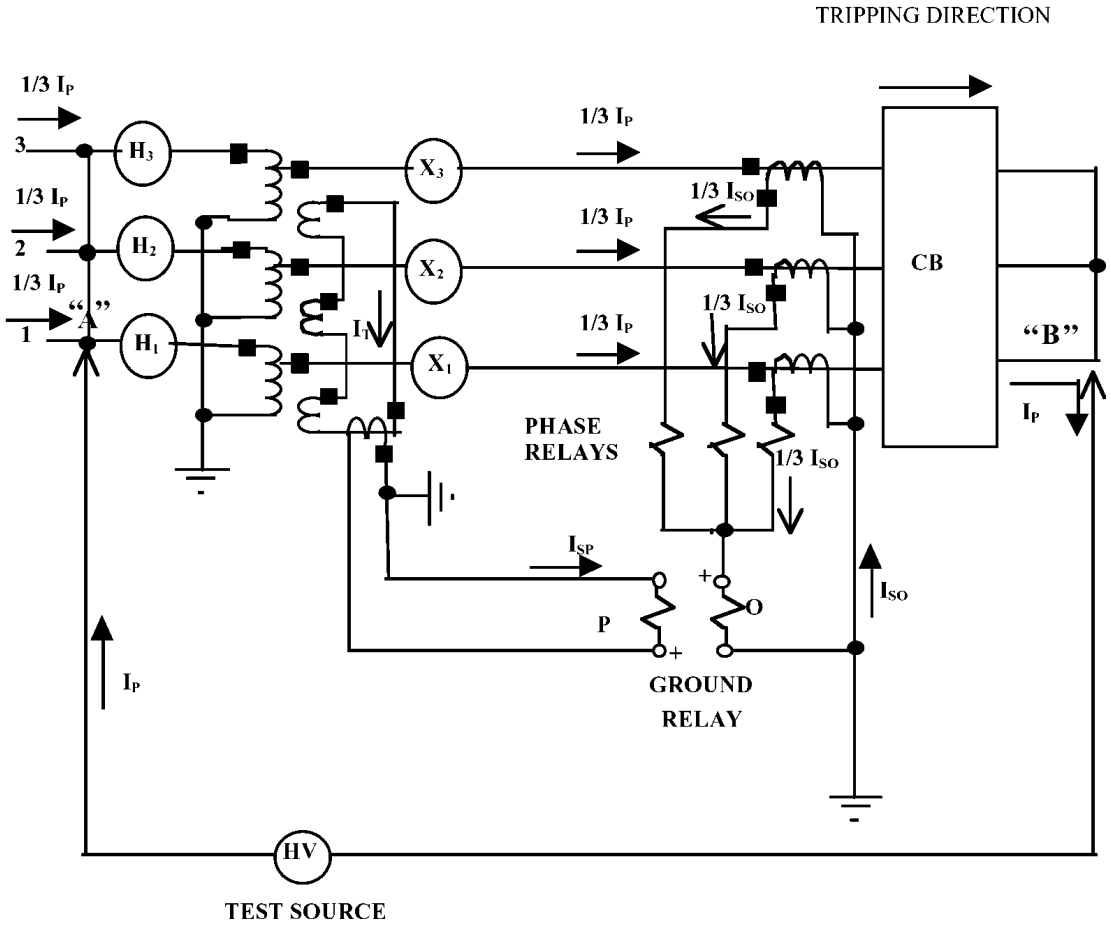

LEGEND
CB —CIRCUIT BREAKER
HV - PRIMARY INJECTION TEST SOURCE (HIGH VOLTAGE)
O - OPERATING COIL
P - POLARIZING COIL

Figure 24—Directional ground relay (current polarized-transformer tertiary current transformer), current polarized circuit, primary current injection—Method 2 (see 13.1.2)

NOTE—The connection in Figure 24 results in no current in the autotransformer common. Consequently, the autotransfomer functions as a wye-delta transformer, resulting in the direction of current in the delta winding being reversed from that in Figure 22. This causes opening torque on the directional element.

Copyright © 2004 IEEE. All rights reserved.

Copyright The Institute of Electrical and Electronics Engineers, Inc.
Provided by IHS under license with IEEE
No reproduction or networking permitted without license from IHS
Not for Resale

Annex A

(informative)

Aids to differential relay load checks

A.1 Numerical relay metering aid to injection and load tests

Numerical relays usually provide readout of the magnitudes and angles of currents and voltages applied to the relay. Since the relay is reporting the values it will use to determine whether to operate or restrain, these measurements are superior to measurements made external to the relay where the effect of relay connections still has to be taken into account. These metering functions can be used to great advantage during injection and load tests on the equipment. The manufacturers often provide a worksheet for determining the tripping direction of the relay from load values. The techniques applied in these worksheets can be used to determine the relay operating, restraining, and/or polarizing values when conducting the tests described in Clause 5, Clause 6, Clause 7, Clause 8, Clause 9, Clause 10, and Clause 11.

Some numeric relays may not provide direct access to the angles of voltages and currents. In such cases, an event report can be generated that provides values of instantaneous samples from which the angles can be calculated.

A.2 Differential relay load checks

For load checks, the relay primary and secondary restraint quantities may be compared with values read from other metering devices taking into account the transformer and CT ratios, phase-shifts and nameplate data, and the relay tap setting and angle compensation. Plotting the phasors helps to diagnose wiring ratio errors.

NOTE—If all wiring, settings, and taps are correct, the operating currents in differential relays will be small during external faults. Because large operating currents during external faults are due to errors in CT ratios and errors in transformer ratios, the operating currents may not be 120° apart in the three phases. A sample worksheet is illustrated in A.3.

Copyright © 2004 IEEE. All rights reserved.
Copyright The Institute of Electrical and Electronics Engineers, Inc.
Provided by IHS under license with IEEE
No reproduction or networking permitted without license from IHS
Not for Resale

A.3 Differential relay load check worksheet

	Phase 1	Phase 2	Phase 3
Readings from other metering source			
A) Transformer primary load current =	_____	_____	_____
B) Transformer secondary load current =	_____	_____	_____
C) Primary/secondary load current ratio (A/B) =	_____	_____	_____
Readings from relay			
Relay type # _____			
Relay serial #_____			
D) Primary restraint current magnitude	_____	_____	_____
E) Primary restraint current angle	_____	_____	_____
F) Secondary restraint current magnitude	_____	_____	_____
G) Secondary restraint current angle	_____	_____	_____
H) Operating current magnitude	_____	_____	_____
(should be less than 10% of smaller of D or F)			
I) Operating current angle	_____		
J) Relay primary tap	_____		
K) Relay secondary tap	_____		
L) Relay angle correction setting code	_____		
Transformer nameplate and schematic values			
Transformer serial #_____			
M) Transformer nameplate ratio =	_____		
(C should be within 10% of M)			
N) Primary CT ratio and connection	_____		
O) Secondary CT ratio and connection	_____		
P) Auxiliary CT ratio and connection	_____		
Calculated values			
Q) Relay primary reading multiplied by CT ratio =	_____	_____	_____
(Q should equal A within 10%)			
R) Relay secondary reading multiplied by CT ratio =	_____	_____	_____
(R should equal B within 10%)			
S) Relay primary/secondary current ratio (D/F) =	_____	_____	_____
T) Relay primary/secondary tap ratio (J/K) =	_____	_____	_____
(T should equal S within 10%)			
U) Relay primary/secondary current angle difference (E – G) =	_____	_____	_____
V) Relay angle correction setting degrees =	_____	_____	_____
(from the relay manufacturer's instruction manual)			
W) Nominal angle between primary and secondary CT outputs	_____		
(from M, N, O, and P)			
(U should equal V should equal W)			

Copyright © 2004 IEEE. All rights reserved.

Copyright The Institute of Electrical and Electronics Engineers, Inc.
Provided by IHS under license with IEEE
No reproduction or networking permitted without license from IHS
Not for Resale

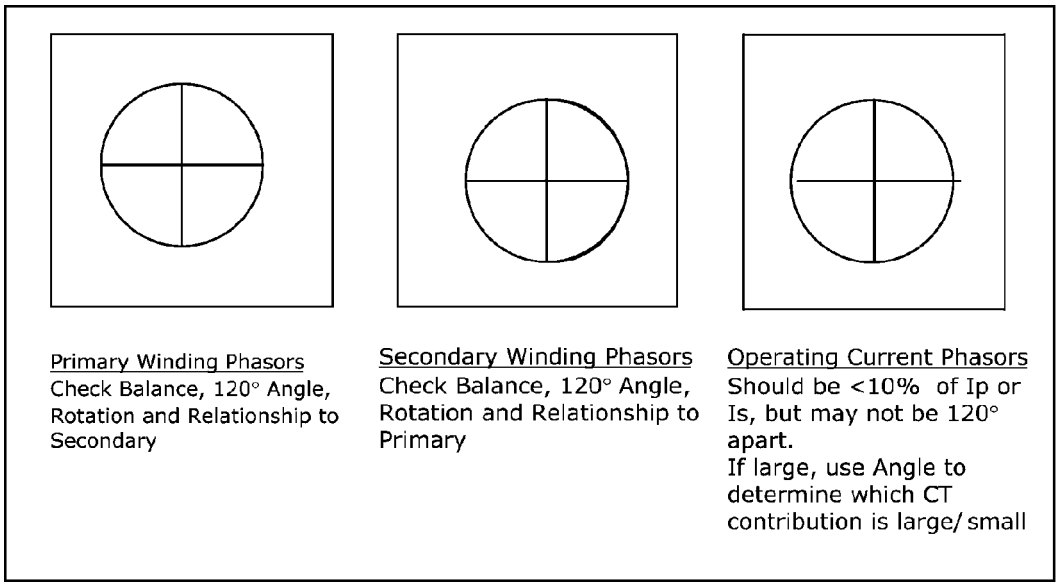

Figure A.1—Phasor balance and operating-current phasors check sheet

Copyright © 2004 IEEE. All rights reserved.
Copyright The Institute of Electrical and Electronics Engineers, Inc.
Provided by IHS under license with IEEE
No reproduction or networking permitted without license from IHS
Not for Resale

Annex B

(informative)

Bibliography

[B1] IEEE 100, *The Authoritative Dictionary of IEEE Standards Terms,* Seventh Edition.[5]

[B2] IEEE Std C37.100-1992, IEEE Standard Definitions for Power Switchgear.

[5]The IEEE standards or products referred to in Annex B Bibliography are trademarks owned by the Institute of Electrical and Electronics Engineers, Incorporated.

--`,,`,`-`-`,,`,,`,`,,`---
Copyright © 2004 IEEE. All rights reserved.

Copyright The Institute of Electrical and Electronics Engineers, Inc.
Provided by IHS under license with IEEE
No reproduction or networking permitted without license from IHS
Not for Resale