IEEE Std C37.102-1995
(Revision of
IEEE Std C37.102-1987)

IEEE Guide for AC Generator Protection

Sponsor

Power System Relaying Committee
of the
IEEE Power Engineering Society

Approved 12 December 1995

IEEE Standards Board

Abstract: A review of the generally accepted forms of relay protection for the synchronous generator and its excitation system is presented. This guide is primarily concerned with protection against faults and abnormal operating conditions for large hydraulic, steam, and combustion-turbine generators.
Keywords: ac generator protection, relay protection, synchronous generator

The Institute of Electrical and Electronics Engineers, Inc.
345 East 47th Street, New York, NY 10017-2394, USA

Copyright © 1996 by the Institute of Electrical and Electronics Engineers, Inc.
All rights reserved. Published 1996. Printed in the United States of America.

ISBN 1-55937-711-9

No part of this publication may be reproduced in any form, in an electronic retrieval system or otherwise, without the prior written permission of the publisher.

Copyright The Institute of Electrical and Electronics Engineers, Inc.
Provided by IHS under license with IEEE
No reproduction or networking permitted without license from IHS
Not for Resale

IEEE Standards documents are developed within the Technical Committees of the IEEE Societies and the Standards Coordinating Committees of the IEEE Standards Board. Members of the committees serve voluntarily and without compensation. They are not necessarily members of the Institute. The standards developed within IEEE represent a consensus of the broad expertise on the subject within the Institute as well as those activities outside of IEEE that have expressed an interest in participating in the development of the standard.

Use of an IEEE Standard is wholly voluntary. The existence of an IEEE Standard does not imply that there are no other ways to produce, test, measure, purchase, market, or provide other goods and services related to the scope of the IEEE Standard. Furthermore, the viewpoint expressed at the time a standard is approved and issued is subject to change brought about through developments in the state of the art and comments received from users of the standard. Every IEEE Standard is subjected to review at least every five years for revision or reaffirmation. When a document is more than five years old and has not been reaffirmed, it is reasonable to conclude that its contents, although still of some value, do not wholly reflect the present state of the art. Users are cautioned to check to determine that they have the latest edition of any IEEE Standard.

Comments for revision of IEEE Standards are welcome from any interested party, regardless of membership affiliation with IEEE. Suggestions for changes in documents should be in the form of a proposed change of text, together with appropriate supporting comments.

Interpretations: Occasionally questions may arise regarding the meaning of portions of standards as they relate to specific applications. When the need for interpretations is brought to the attention of IEEE, the Institute will initiate action to prepare appropriate responses. Since IEEE Standards represent a consensus of all concerned interests, it is important to ensure that any interpretation has also received the concurrence of a balance of interests. For this reason IEEE and the members of its technical committees are not able to provide an instant response to interpretation requests except in those cases where the matter has previously received formal consideration.

Comments on standards and requests for interpretations should be addressed to:

Secretary, IEEE Standards Board
445 Hoes Lane
P.O. Box 1331
Piscataway, NJ 08855-1331
USA

IEEE Standards documents are adopted by the Institute of Electrical and Electronics Engineers without regard to whether their adoption may involve patents on articles, materials, or processes/ Such adoption does not assume any liability to any patent owner, nor does it assume any obligation whatever to parties adopting the standards documents.

--`,-`-`,,`,,`,`,,`---

Copyright The Institute of Electrical and Electronics Engineers, Inc.
Provided by IHS under license with IEEE
No reproduction or networking permitted without license from IHS

Not for Resale

Introduction

(This introduction is not part of IEEE Std C37.102-1995, IEEE Guide for AC Generator Protection.)

IEEE Std C37.102 was initially published in 1987. It was subsequently reaffirmed in 1990. The guide is designed for the protection of typical stream, hydraulic, and combustion-turbine generators. Any scheme that is judged to be a good alternative practice for generator protection is included in the guide. New schemes that have gained acceptance and usage have been added to the guide.

In the revision of IEEE Std C37.102-1987, several areas were improved. Among the most notable are as follows:

— The protection of generators for inadvertent energizing has been updated and includes new, widely used schemes.

— The voltage transformers clause has been changed to improve the description of ferroresonance prevention and the addition of two schemes that use current limiting resistors.

— A gas turbine protection scheme and power transformer protection through mechanical fault detection have been added to the guide.

— The guide has been revised to align with IEEE Std C37.101-1993, IEEE Guide for Generator Ground Protection.

— The tripping modes described in clause 6 have been rewritten to reflect the current industry practices.

— The references and bibliography have been updated. Text and figures have been generally revised for improved readability and technical enhancement.

— The generator motoring protection has been revised to remove those devices used for control logic purposes rather than protection purposes.

— The synchronizing subclause has been expanded to include more details on acceptable synchronizing limits.

At the time this guide was completed, the Revision of AC Generator Protection Guide Working Group had the following membership:

William P. Waudby, *Chair*
Hardy J. King, *Vice Chair*

T. R. Beckwith
W. A. Elmore
E. C. Fennell
D. J. Finley
J. D. Gardell
M. R. Gonzalez
C. H. Griffin
R. W. Haas
W. Hartmann
R. Hedding
J. Horwath
K. C. Kozminski
S. Mazumdar
C. J. Mozina
G. R. Nail
A. C. Pierce
P. W. Powell
V. Rebbapragada
D. W. Smaha
C. L. Wagner
M. Yalla

Copyright The Institute of Electrical and Electronics Engineers, Inc.
Provided by IHS under license with IEEE
No reproduction or networking permitted without license from IHS
Not for Resale

The following persons were on the balloting committee:

Mark Adamiak
John Appleyard
E. A. Baumgartner
Barbara L. Beckwith
R. W. Beckwith
G. Benmouyal
David C. Blackburn, Jr.
John Boyle
B. Bozoki
James A. Bright
J. Burnworth
H. J. Calhoun
Carlos H. Castro
Thomas W. Cease
John W. Chadwick, Jr.
S. R. Chano
Graham.Clough
Stephen P. Conrad
Mark W. Conroy
Carey J. Cook
Albert N. Darlington
Douglas C. Dawson
R. W. Dempsey
C. L. Downs
Paul R. Drum
Lavern L. Dvorak
Walt Elmore
A. Elneweihi
J. Esztergalyos
H. G. Farley
E. C. Fennell
C. W. Fromen
Jonathan D. Gardell
Jeffrey G. Gilbert
A. T. Giuliante
S. E. Grier
Edward M. Gulachenski
E. A. Guro
R. W. Haas
R. E. Hart
Irwin Hasenwinkle
C. F. Henville
J. W. Hohn
J. D. Huddleston
J. W. Ingleson
J. A. Jodice
Edward W. Kalkstein
Mladen Kezunovic
K. J. Khunkhun
W. C. Kotheimer
P. A. Kotos
John R. Linders
W. J. Marsh, Jr.
J. E. McConnell
M. J. McDonald
J. L. McElray
M. Meisinger
William M. Mello
G. L. Michel
R. J. Moran
Charles J. Mozina
K. K. Mustaphi
George R. Nail
B. D. Nelson
G. C. Parr
Robert D. Pettigrew
Arun G. Phadke
Alan C. Pierce
John M. Postforoosh
M. S. Sachdev
Evan T. Sage
Miriam P. Sanders
James E. Stephens
W. M. Strang
M. J. Swanson
Richard P. Taylor
James Teague
John T. Tengdin
James S. Thorp
Demetrios A. Tziouvaras
Joe T. Uchiyama
E. A. Udren
Vid. Varneckas
Charles L. Wagner
William P. Waudby
Thomas E. Wiedman
P. B. Winston
K. Zimmerman
J. A. Zipp
Stan Zocholl
John A. Zulaski

When the IEEE Standards Board approved this standard on 12 December 1995, it had the following membership:

E. G. "Al" Kiener, *Chair* **Donald C. Loughry,** *Vice Chair*
Andrew G. Salem, *Secretary*

Gilles A. Baril
Clyde R. Camp
Joseph A. Cannatelli
Stephen L. Diamond
Harold E. Epstein
Donald C. Fleckenstein
Jay Forster*
Donald N. Heirman
Richard J. Holleman
Jim Isaak
Ben C. Johnson
Sonny Kasturi
Lorraine C. Kevra
Ivor N. Knight
Joseph L. Koepfinger*
D. N. "Jim" Logothetis
L. Bruce McClung
Marco W. Migliaro
Mary Lou Padgett
John W. Pope
Arthur K. Reilly
Gary S. Robinson
Ingo R=FCsch
Chee Kiow Tan
Leonard L. Tripp
Howard L. Wolfman

*Member Emeritus

Also included are the following nonvoting IEEE Standards Board liaisons:

Satish K. Aggarwal
Steve Sharkey
Robert E. Hebner
Chester C. Taylor

Rochelle L. Stern
IEEE Standards Project Editor

--`,,```,,,,````-`-`,,`,,`,`,,`---

Copyright The Institute of Electrical and Electronics Engineers, Inc.
Provided by IHS under license with IEEE
No reproduction or networking permitted without license from IHS
Not for Resale

Contents

CLAUSE PAGE

1. Overview 1
   1.1 Scope 1
   1.2 Description of the guide 1
2. References 2

3. Description of generators, excitation systems and generating station arrangements 3
   3.1 Generator winding design and arrangements 3
   3.2 Generator grounding 4
   3.3 Excitation systems 7
   3.4 Generating station arrangements 10

4. Protection requirements 14
   4.1 Generator stator thermal protection 14
   4.2 Field thermal protection 17
   4.3 Generator stator fault protection 20
   4.4 Generator rotor field protection 46
   4.5 Generator abnormal operating conditions 51
   4.6 System backup protection 72
   4.7 Generator breaker failure protection 76
   4.8 Excitation System Protection 79
   4.9 Power transformer protection through mechanical fault detection 81

5. Other protective considerations 82
   5.1 Current transformers 82
   5.2 Voltage transformers 83
   5.3 Protection during start-up or shut-down 87
   5.4 Inadvertent energizing 90
   5.5 Subsynchronous resonance 93
   5.6 Transmission line reclosing near generating stations 94
   5.7 Synchronizing 85

6. Protection specification 96
   6.1 Protective arrangements 96
   6.2 Protective functions 97

ANNEX

A (informative) Bibliography 110

Copyright The Institute of Electrical and Electronics Engineers, Inc.
Provided by IHS under license with IEEE
No reproduction or networking permitted without license from IHS
Not for Resale

IEEE Guide for AC Generator Protection

1. Overview

1.1 Scope

This application guide for the relay protection of synchronous generators presents a review of the generally accepted forms of protection for the generator and its excitation system. It summarizes the use of relays and devices, and serves as a guide for the selection of equipment to obtain adequate protection. The guide is primarily concerned with protection against faults and abnormal operating conditions for large hydraulic, steam, and combustion-turbine generators. Basing generator protection on machine size is difficult because the desired protection may be determined more by the importance of the generator to the power system than by the size of the generator.

The recommendations made pertain to typical generator installations. However, sufficient background information relating to protection requirements, applications, and setting philosophy is given to enable the reader to evaluate the need to select and apply suitable protection for most situations.

The protective functions discussed in this guide may be implemented with a multi-functional microprocessor-based protection system (digital system). The protection philosophy, practices, and limits are essentially identical to those of the implementation using discrete component relays. The algorithms used to perform some of the protection functions may be different, but should produce equal or better protection. However, the performance and capability may be superior using the digital systems such as improved frequency response (bandwidth) and thresholds (pickup settings). Other additional features that enhance the functionality may be available from these digital systems.

This guide does not purport to detail the protective requirements of all generators in every situation. Standby and emergency use generators are specifically excluded.

1.2 Description of the guide

Clause 3: Description of generators, excitation systems, and generating station arrangements. Clause 3 presents a brief description of typical generator design and connections, generator grounding practices, excitation systems design, and generating station arrangements. The intent of this clause is to present information that affects the protection arrangement and selection of protective relays.

A discussion of auxiliary system transfer and the possible negative impacts of misoperation and faults on these systems is not included in this clause.

The methods employed for grounding and fusing the secondary circuits of voltage transformers and the methods for grounding current-transformer secondary circuits are not generally the same for all installations.

--`,,`-`-`,,`,,`,`,,`---

Copyright The Institute of Electrical and Electronics Engineers, Inc.
Provided by IHS under license with IEEE
No reproduction or networking permitted without license from IHS

Not for Resale

For this reason, no secondary fuses or ground points are indicated in the figures throughout this guide. However, all current and voltage transformer secondary circuits should be grounded in accordance with IEEE Std C57.13.3-1983.[1]

Clause 4: Protection requirements. Clause 4 briefly describes the damaging effects of faults and abnormal operating conditions and the type of devices and their settings commonly used to detect these conditions. A clear understanding of the effects of abnormalities on generators will assist the reader in evaluating the need for, and the means of, obtaining adequate generator protection in any specific situation.

Clause 5: Other protective considerations. Clause 5 presents a discussion of other forms of protection and factors that may be considered in the generator zone.

Clause 6: Protection specifications. Clause 6 presents detailed tabulations and diagrams that are classified according to the method by which the generator is connected to the system. These tables and diagrams show the combination of relays (and their control function) often applied for generator and excitation system protection in accordance with good engineering practices. These tables and diagrams also consider the protective devices on other equipment in or adjacent to the generating station that are connected to trip or shut down the generator.

2. References

This standard shall be used in conjunction with the following publications. When the following standards are superseded by an approved revision, the revision shall apply.

ANSI C50.12-1982 (Reaff 1989), American National Standard Requirement for Salient-Pole Synchronous Generators and Generator/Motors for Hydraulic Turbine Applications.[2]

ANSI C50.13-1989, American National Standard Requirement for Rotating Electrical Machinery—Cylindrical Rotor Synchronous Generators.

IEEE Std 67-1990, IEEE Guide for Operation and Maintenance of Turbine Generators (ANSI).[3]

IEEE Std 142-1991, IEEE Recommended Practice for Grounding of Industrial and Commercial Power Systems (ANSI).

IEEE Std 502-1985 (Reaff 1992), IEEE Guide for Protection, Interlocking, and Control of Fossil-Fueled Unit-Connected Steam Stations (ANSI).

IEEE Std C37.101-1993, IEEE Guide for Generator Ground Protection (ANSI).

IEEE Std C37.106-1987 (Reaff 1992), IEEE Guide for Abnormal-Frequency Protection for Power Generating Plants (ANSI).

IEEE Std C57.13-1993, IEEE Standard Requirements for Instrument Transformers (ANSI).

[1]For information on references, see clause 2.

[2]ANSI publications are available from the Sales Department, American National Standards Institute, 11 West 42nd Street, 13th Floor, New York, NY 10036, USA.

[3]IEEE publications are available from the Institute of Electrical and Electronics Engineers, 445 Hoes Lane, P.O. Box 1331, Piscataway, NJ 08855-1331, USA.

Copyright The Institute of Electrical and Electronics Engineers, Inc.
Provided by IHS under license with IEEE
No reproduction or networking permitted without license from IHS Not for Resale

IEEE Std C57.13.3-1983 (Reaff 1991), IEEE Guide for the Grounding of Instrument Transformer Secondary Circuits and Cases (ANSI).

IEEE Std C62.92.2-1989, IEEE Guide for the Application of Neutral Grounding in Electrical Utility Systems, Part II—Grounding of Synchronous Generator Systems (ANSI).

3. Description of generators, excitation systems, and generating station arrangements

3.1 Generator winding design and arrangements

The stator windings of a three-phase synchronous generator consist of a number of single-turn or multi-turn coils that are connected in a series to form a single-phase circuit. One of these circuits or several circuits connected in parallel are used to form a complete phase winding. The phase windings are normally connected in wye with the neutral grounded through some external impedance. Delta-connected phase windings are used occasionally but this is not a common connection. Figure 3.1 illustrates the possible winding arrangements and connections.

The winding arrangements shown in figures 3.1a) and b) are the configurations most commonly used for all types of generators. When more than one circuit is used per phase as shown in figure 3.1b), these circuits will be connected in parallel inside the machine with two leads being brought out to external connections. In general, up to three current transformers can be provided at each end of the phase winding for relaying and instrumentation purposes.

In some hydrogenerator designs, there may be a number of circuits per phase and each circuit may consist of a number of multi-turn coils connected in series. In these machines, the parallel-connected circuits may be formed into two groups that are paralleled with only two leads being brought out to external connections. There may be an equal or unequal number of circuits in each group. In this design, current transformers can be provided in each phase group and in the leads to the external connections.

Figure 3.1c) illustrates the wye-connected double-winding construction sometimes used in large steam-turbine generators. Each phase has two separate windings that are connected externally to form two wye connections. The high-voltage terminals of each phase are connected in parallel to form a single three-phase output. Separate wye connections are formed on the neutral end of each winding. These neutrals may be physically at opposite ends of the machine. This arrangement is sometimes referred to as the double-ended, twelve-bushing machine and is used where the total full-load phase current exceeds the current carrying capability of a single bushing. The bushings at each end of the winding can accommodate three current transformers.

In the delta-connected generator, there may be one or more paralleled circuits per phase with two leads brought out to external connections. Current transformers can be provided inside the delta, at the ends of each winding, or outside the delta, or both.

3.2 Generator grounding

It is common practice to ground all types of generators through some form of external impedance. The purpose of this grounding is to limit the mechanical stresses and fault damage in the machine, to limit transient voltages during faults, and to provide a means for detecting ground faults within the machine. A complete discussion of all grounding and ground protection methods may be found in IEEE Std C62.92.2-1989 and IEEE Std C37.101-1993.

Copyright The Institute of Electrical and Electronics Engineers, Inc.
Provided by IHS under license with IEEE
No reproduction or networking permitted without license from IHS
Not for Resale

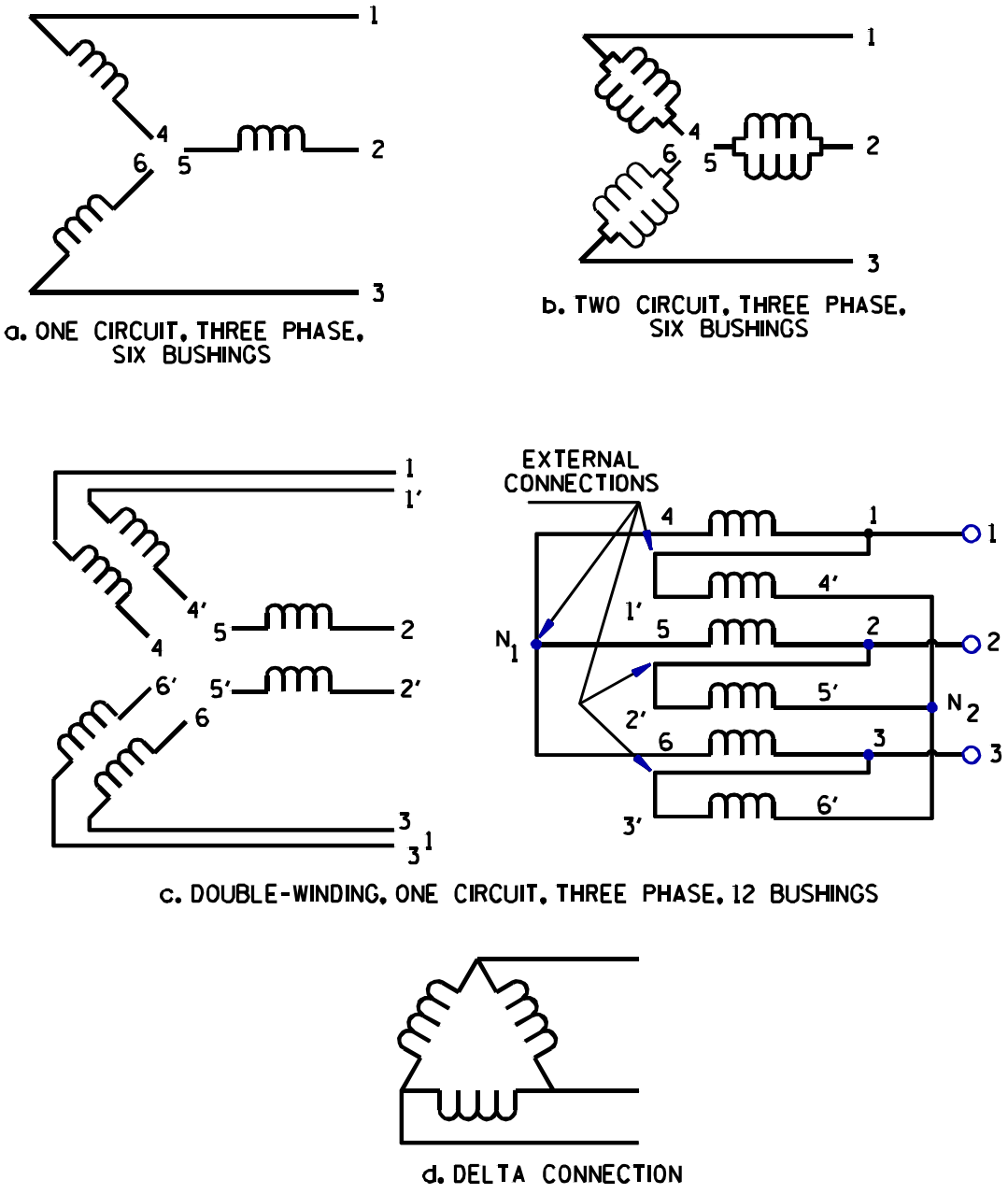

Figure 3.1—Winding configurations

The methods most commonly used for generator grounding will be discussed in this guide. They are listed in the following four broad categories:

a) High-impedance grounding
b) Low-resistance grounding
c) Reactance grounding
d) Grounding-transformer grounding

Copyright The Institute of Electrical and Electronics Engineers, Inc.
Provided by IHS under license with IEEE
No reproduction or networking permitted without license from IHS Not for Resale

Solid grounding of a generator neutral is not generally used since this practice can result in high mechanical stresses and excessive fault damage in the machine. According to ANSI C50.13-1989, the maximum stresses that a generator is normally designed to withstand is that associated with the currents of a three-phase fault at the machine terminals. Because of the relatively low zero-sequence impedance inherent in most synchronous generators, a solid phase-to-ground fault at the machine terminals will produce winding currents that are higher than those for a three-phase fault. Therefore, to comply with this guide, generators shall be grounded in such a manner to limit the maximum phase-to-ground fault current to a magnitude equal to, or less than, the three-phase fault current.

Generators are not often operated ungrounded. While this approach greatly limits the phase-to-ground fault currents, and consequently limits damage to the machine, it can produce high transient overvoltages during faults and also makes the fault location difficult to determine.

The following subclauses provide a very brief description and typical applications of the above grounding methods.

3.2.1 High impedance grounding

Two types of high-impedance grounding are in common use today as discussed in 3.2.1.1 and 3.2.1.2.

3.2.1.1 High-resistance grounding

In this method, a distribution transformer is connected between the generator neutral and ground, and a resistor is connected across the secondary. The primary voltage rating of the distribution transformer is usually equal to, or greater than, rated generator line-to-neutral voltage, while the secondary winding rating is 120 V or 240 V. The secondary resistor is selected so that for a single-phase-to-ground fault at the generator terminals, the power dissipated in the resistor is equal to, or greater than, three times the zero-sequence capacitive kVA to ground of the generator windings, and of all other equipment that may be connected to the machine terminals. With this resistor rating, the transient overvoltages during faults will be kept to safe values. This arrangement is considered high-resistance grounding. For a single-phase-to-ground fault at the machine terminals, the primary fault current will be limited to a value in the range of about 3 A to 25 A. If possible, the ground fault current level should be chosen to coordinate with the primary fuses (when used) of wye-wye connected voltage transformers with grounded neutrals. Note that distribution transformers with internal fuses or circuit breakers should not be used, as they could inadvertently be open and the grounding and protection scheme could be inoperative at the time of fault.

In some cases, the distribution transformer is omitted and a high value of resistance is connected directly between the generator neutral and ground. The resistor size is selected to limit ground-fault current to the range of 3–25 A. While this method of grounding is used in Europe, the physical size of the resistors, the required resistor insulation level, and the cost may preclude the use of this method.

3.2.1.2 Ground fault neutralizer grounding (tuned inductive reactor)

In this grounding method, a distribution-type transformer with a ratio selected as above is used with a secondary tunable reactor. The ohmic value of this secondary reactor is selected so that, when reflected into the primary circuit, its reactance is equal to one-third of the zero-sequence capacitive reactance of the generator and all equipment connected to the generator terminals up to and including the delta-connected windings of the main step-up and station service transformers. This type of grounding limits the single-phase-to-ground fault current to 1 A or less. This low fault current will not sustain an arc or cause damage to the generator stator iron. Ground fault neutralizer grounding can be used with all unit-system installations where a single generator is connected through its individual grounded wye-delta step-up transformer (or transformers) to the system.

Copyright The Institute of Electrical and Electronics Engineers, Inc.
Provided by IHS under license with IEEE
No reproduction or networking permitted without license from IHS
Not for Resale

Also, ground fault neutralizer grounding can detect much higher impedance grounds than is possible with high- resistance grounding. For example, the calculated maximum detectable fault impedance for a typical nuclear unit of 975 MVA is 3 574 000 Ω for ground fault neutralizer grounding. Calculated maximum stator fault current for a typical 975 MVA nuclear unit is 0.45 A. This contrasts with a high-resistance grounding, the maximum fault impedance that can be detected is 66 900 Ω.

If protection from iron burning and greater sensitivity of detecting incipient faults is deemed desirable (e.g., an existing older generator equipped with high-resistance grounding), retrofitting with ground-fault neutralizer grounding can be done by replacing the resistor with a reactor.

Along with these desirable features are several that may be considered undesirable as follows:

a) If automatic tripping is used, coordination with generator vt fuses may not be possible. VT secondary wiring faults may cause ground indications where wye-wye connected generator vts are used. Coordination can be achieved by various methods (see IEEE Committee Report [B19].[4]

b) High zero sequence voltages on the generator system are possible if too high a reactor coil constant is selected for the neutralizer.

c) If surge-protective equipment is used on the generator, it should be selected on the basis of possible higher temporary overvoltages during ground faults. Voltages can be kept to within reasonable limits by selecting a reactor coil constant in a range from 10 to 50 without reducing sensitivity of the fault detection system.

3.2.2 Low-resistance grounding

In this method, a resistor is connected directly between the generator neutral and ground. The resistor is selected to provide sufficient current for selective ground relaying of several machines, feeders, or both. In general, the grounding resistor is selected to limit the generator's contribution to a single-phase-to-ground fault at its terminals to a value in the range of 200 A up to 150% of rated full-load current. Resistor cost and size usually preclude the use of resistors to limit the current below 200 A or to permit currents above machine rated current.

This method of grounding is generally used where two or more generators are bussed at generator voltage and connected to a system through one step-up transformer or where the generator is connected directly to a distribution system having a low-impedance grounding source on the generator bus.

3.2.3 Reactance grounding

This method uses an inductive reactance between the generator neutral and ground. The inductive reactance is selected to produce an X_0/X_1 ratio at the machine terminals in the range of 1 to 10. Common practice is to maintain an effectively grounded system by keeping the X_0/X_1 ratio at 3 or less. This method of grounding produces relatively high levels of phase-to-ground fault currents ranging from approximately 25% to 100% of the three-phase fault current.

This grounding method is generally used where the generator is connected directly to a solidly grounded distribution system.

[4]The numbers in brackets correspond to those bibliographical items listed in annex B.

Copyright The Institute of Electrical and Electronics Engineers, Inc.
Provided by IHS under license with IEEE
No reproduction or networking permitted without license from IHS Not for Resale

3.2.4 Grounding-transformer grounding

This method involves the use of a grounding transformer connected to the machine terminals or to the generator bus. The grounding may be provided by a zig zag transformer or a grounded wye-delta transformer, or by a grounded wye-broken delta transformer with a resistor connected across a corner of the broken delta. When a zig zag or a grounded wye-delta transformer is used, the effective grounding impedance is selected to provide sufficient current for selective ground relaying.

The grounded wye-broken delta transformer with a resistance in the corner of the broken delta is generally a high-resistance grounded system. The resistance would be selected in the same manner as for the distribution transformer with secondary resistor. This method limits the single-phase-to-ground fault current to a range of 3–25 primary A.

A zig zag or grounded wye-delta transformer may be used as an alternate grounding source when a generator with neutral reactor grounding is connected directly to a distribution system. This approach can also be used where several ungrounded-wye or delta-connected generators are bussed at generator voltage.

A grounded wye-broken delta transformer with a resistor across the corner of the broken delta may be used to provide a means for detecting ground faults in ungrounded-wye or delta-connected generators.

3.3 Excitation systems

The following four basic types of excitation systems used to control the output of ac machines:

— the dc generator commutator exciter
— the alternator rectifier exciter with stationary rectifier system
— the alternator rectifier exciter with rotating rectifier system
— the static excitation system

In terms of response times, excitation systems fall into the following two categories—rotating and static. Rotating exciters respond slower than static exciters. The speed of response of the excitation system is commonly expressed in terms of the “response ratio,” which indicates the speed of response during a period of 0.5 s after a sudden 20% reduction in generator terminal voltage. Rotating exciters have a response ratios in the range of 0.5 to 1.0 per unit exciter volts per second. Static exciters have response ratios in the range of 2.5 to 3.5 per unit exciter volts per second. The detailed effects of the excitation system response ratio on the fault current characteristics of the generator is beyond the scope of this guide but is well documented in [B17]. While a detailed description of these systems is beyond the scope of this standard, their general characteristics will be briefly described in the following subclauses.

3.3.1 System with dc generator-commutator exciter

Figure 3.3.1 shows a schematic of the primary elements of this system. Not shown on this diagram and the succeeding figures 3.3.2 through 3.3.5 are the power supplies, such as pilot exciters, the current and potential intelligence inputs to the excitation control, etc., since they are essentially functionally the same for all systems.

Copyright The Institute of Electrical and Electronics Engineers, Inc.
Provided by IHS under license with IEEE
No reproduction or networking permitted without license from IHS
Not for Resale

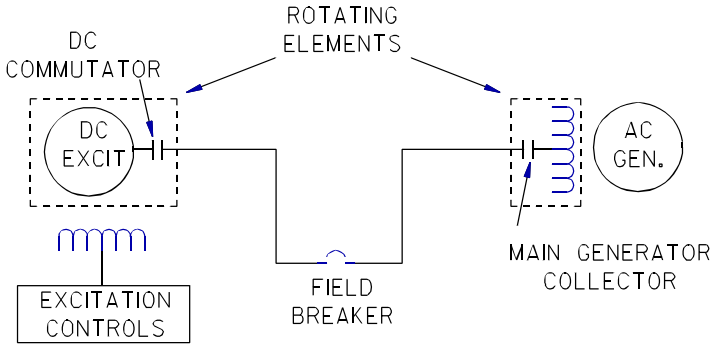

Figure 3.3.1—System with dc generator commutator exciter

In this system, a dc control signal is fed from the excitation control to the stationary field of the dc exciter. The rotating element of the exciter then supplies a direct current through a field breaker to the field winding of the main ac generator. The rotating armature of the dc exciter is either driven from the same shaft as the rotating main field of the generator or can be on a separate motor-driven shaft. In either case, a dc commutator is required on the exciter, and brushes and collector rings are required on the rotating generator field to transmit the main generator field current. This system is used only on the smaller or older machines.

3.3.2 System with alternator rectifier exciter and stationary rectifiers

To eliminate the problems of high-current commutation for medium and large machines, the dc exciter is replaced by an alternator. The system of figure 3.3.2 uses an alternator with a rotating dc field winding driven from the shaft of the main ac generator. Current for this field winding is obtained from the excitation controls through brushes and collector rings. The three-phase ac output of the alternator is rectified through a stationary three-phase diode bridge, and the direct-current output is fed to the field winding of the generator through brushes and collector rings.

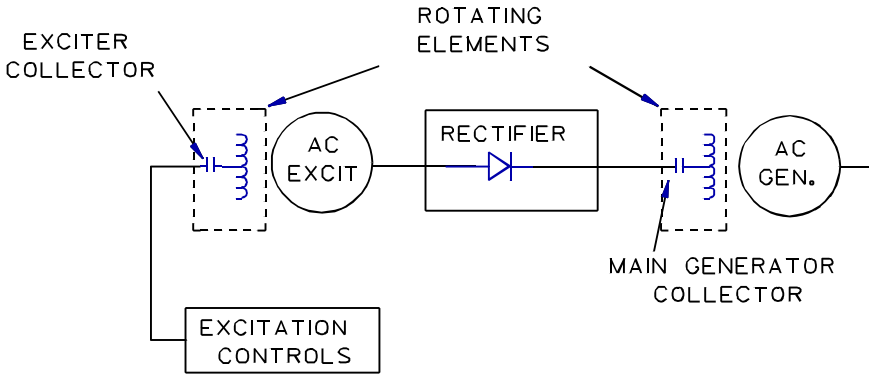

Figure 3.3.2—System with alternator rectifier exciter and stationary exciter and stationary rectifier

3.3.3 System with alternator rectifier exciter and rotating rectifiers (brushless exciters)

The system of figure 3.3.3 again uses an alternator, but by mounting the dc field winding on the stator of the exciter and the ac armature winding on the rotor, all brushes and commutators have been eliminated. In this

Copyright The Institute of Electrical and Electronics Engineers, Inc.
Provided by IHS under license with IEEE
No reproduction or networking permitted without license from IHS
Not for Resale

system, the ac armature of the exciter, the rotating three-phase diode bridge rectifier, and the main field of the ac generator are all mounted on the same rotating shaft system. All electrical connections are made along or through the center of this shaft.

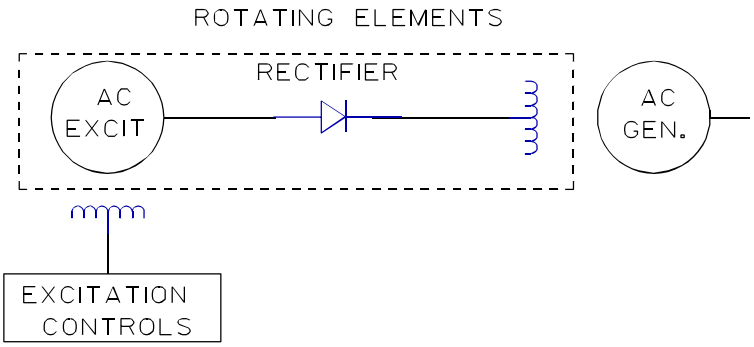

Figure 3.3.3—System with alternator rectifier exciter and rotating rectifiers

3.3.4 System with static exciter

The preceding schemes utilize the energy directly from the prime-mover shaft to obtain the required excitation power. Static excitation systems obtain this power from the electrical output of the generator or the connected system. In figure 3.3.4, external power current transformers or power voltage transformers (or both) feed rectifiers in the regulating system which, in turn, supply direct current to the main field winding of the generator through brushes and collector rings.

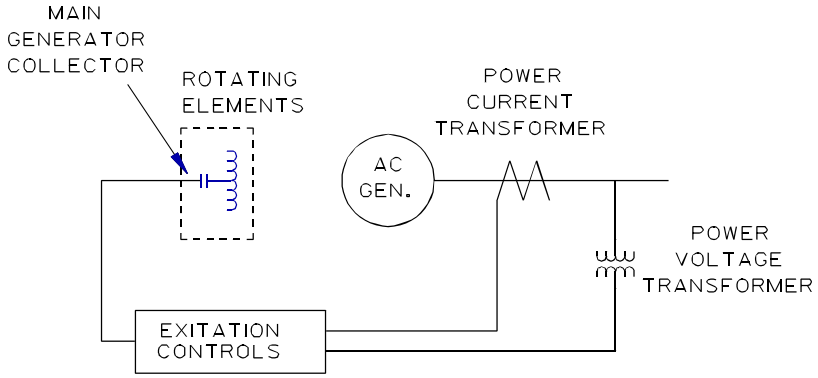

Figure 3.3.4—System with static exciter

Some systems use only potential transformers as input power, while some use additional current transformers to boost the input during fault conditions when the terminal voltage is reduced. During close-in faults, excitation systems using only potential transformers as input power may be unable to sustain fault currents long enough for the protective relaying to operate [B17].

In figure 3.3.5 the excitation power is provided from a voltage and current source within the main generator. The voltage source is a set of three-phase windings mounted in three generator stator winding slots (P bars). These potential windings are connected to each phase of an ungrounded-wye excitation transformer.

Copyright The Institute of Electrical and Electronics Engineers, Inc.
Provided by IHS under license with IEEE
No reproduction or networking permitted without license from IHS
Not for Resale

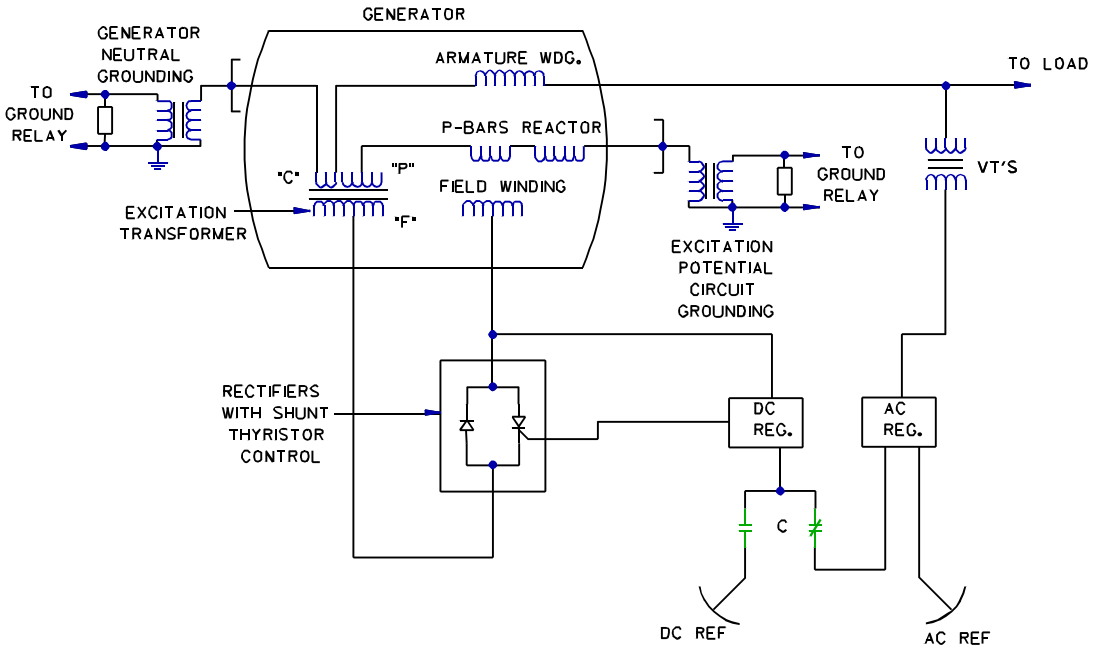

Figure 3.3.5—Static excitation system with internal supply

The current source is achieved by passing each of the three stator main winding leads through a window in each phase excitation transformer.

The output windings of the three single-phase excitation transformers are connected in delta to supply the external bridge rectifier circuits. As indicated in figure 3.3.5, the potential windings in the stator are connected in wye through linear reactors. The neutral is high-resistance grounded through a distribution transformer, thereby providing a means for detecting possible ground faults in the potential windings and excitation transformer.

3.4 Generating station arrangements

The selection and arrangement of protection for generators is influenced to some degree by the method in which the generators are connected to the system and by the overall generating station arrangement. For purposes of this guide, the following generator connections and station arrangements will be considered:

a) Unit generator-transformer configuration
b) Unit generator-transformer configuration with generator breaker
c) Cross-compound generators
d) Generators sharing a unit transformer
e) Generators connected directly to a distribution system

Copyright The Institute of Electrical and Electronics Engineers, Inc.
Provided by IHS under license with IEEE
No reproduction or networking permitted without license from IHS
Not for Resale

For the most part, the configurations represent the most widely used generating station arrangements.

3.4.1 Unit generator-transformer configuration

In this arrangement, a generator and its transformer (unit transformer) are connected as a unit to the system as shown in figure 3.4.1. The generator is usually wye-connected and high-resistance grounded through a distribution transformer. The unit transformer is most commonly a grounded wye-delta connection.

In some large steam turbine generator installations, the generator may be connected to the system through two parallel connected unit transformers, each transformer having one-half the total generator rating.

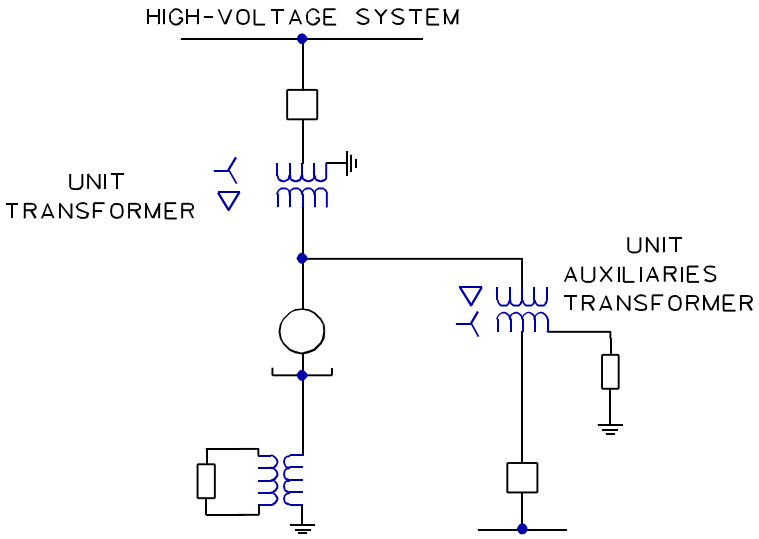

Figure 3.4.1—Unit generator-transformer configuration

There may be one or two unit auxiliaries transformers. These may be two-winding or three-winding transformers, depending upon the size of the generator unit. In most instances the unit auxiliaries transformer(s) is connected delta-wye with the neutral of the wye connected to ground through some impedance.

3.4.2 Unit generator-transformer configuration with generator breakers

This arrangement, illustrated in figure 3.4.2, has been used with some large generators. The generator is wye-connected and high-resistance grounded through a distribution transformer. Two half-size grounded wye-delta connected unit transformers are used to connect the generator to the system. As shown in this figure, two unit auxiliaries transformers are used in this arrangement.

Copyright The Institute of Electrical and Electronics Engineers, Inc.
Provided by IHS under license with IEEE
No reproduction or networking permitted without license from IHS
Not for Resale

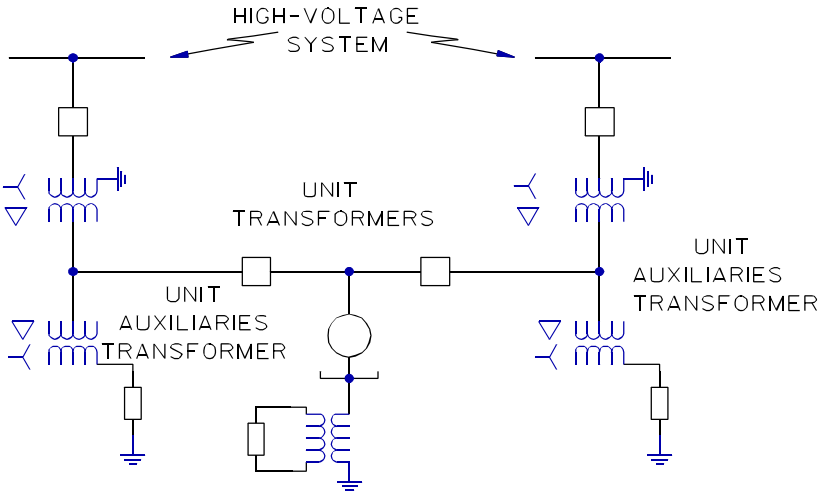

Figure 3.4.2—Unit generator-transformer configuration with generator breakers

3.4.3 Cross-compound generators

The most common method for connecting a cross-compound generator to a system is shown in figure 3.4.3. The low-pressure and the high-pressure units are bussed at generator voltage and connected to the system through a grounded wye-delta unit transformer. Both the low- and the high-pressure units are usually wye-connected, and it is recommended practice to ground only one of the neutrals. High-resistance grounding through a distribution transformer is commonly used.

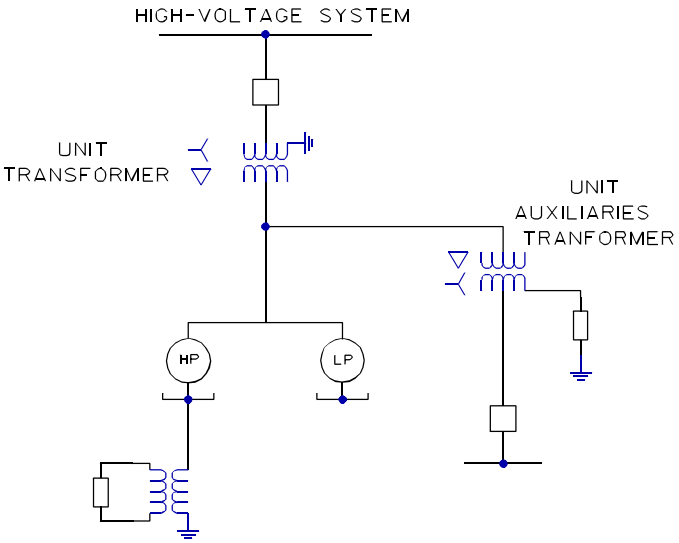

Figure 3.4.3—Cross-compound generators

Copyright The Institute of Electrical and Electronics Engineers, Inc.
Provided by IHS under license with IEEE
No reproduction or networking permitted without license from IHS
Not for Resale

3.4.4 Generators sharing a unit transformer

Figure 3.4.4 illustrates two methods for connecting two or more generators to a system using one step-up transformer. In figure 3.4.4a), two or more generators are bussed at generator voltage and a two-winding grounded wye-delta unit transformer is used to connect the machines to the system. In figure 3.4.4b), a number of generators are connected to the system through a three-winding grounded wye-delta-delta transformer. Either of these approaches may be used with small hydro or combustion-turbine generators.

In either approach, neutral-resistor grounding of the generators would be used in order to achieve selective ground-fault protection for the machines. In some instances, the generators may be high-resistance grounded through a distribution transformer in order to minimize damage due to phase-to-ground faults. However, this grounding method has the disadvantage that it may not provide sufficient current for selective relaying.

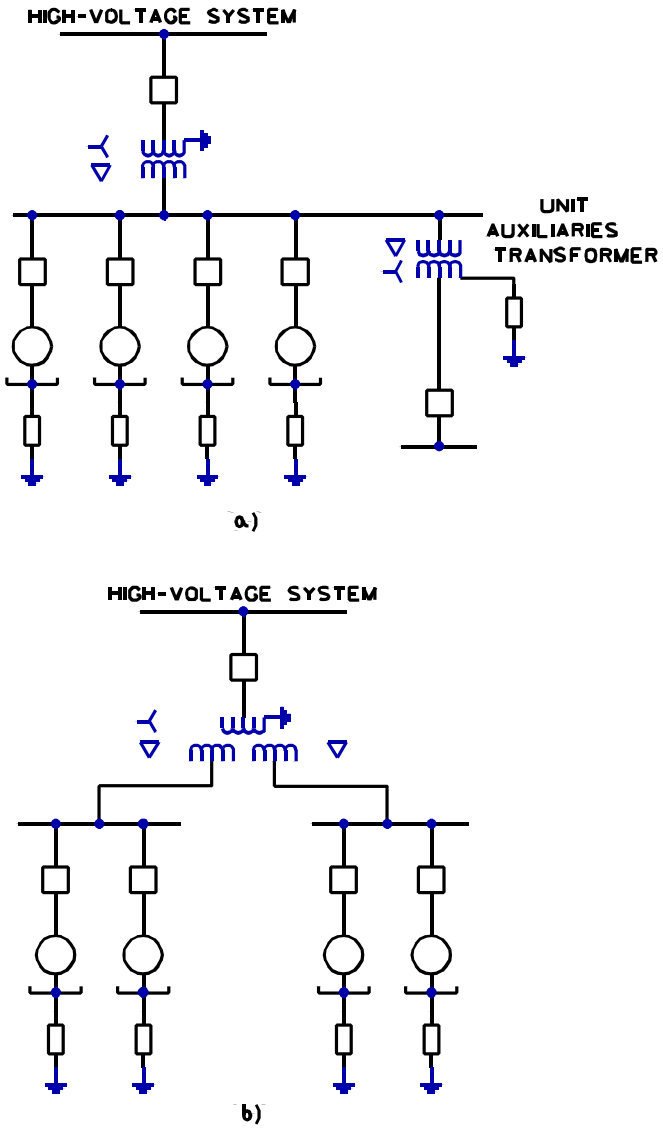

Figure 3.4.4—Generators sharing a transformer

Copyright The Institute of Electrical and Electronics Engineers, Inc.
Provided by IHS under license with IEEE
No reproduction or networking permitted without license from IHS
Not for Resale

3.4.5 Generators connected directly to a distribution system

Figure 3.4.5 shows a typical installation where generators are connected directly to a distribution system. If the system is effectively grounded ($X_0/X_1 \leq 3$, $R_0/X_1 \leq 1$), the generator neutral, or the neutral of the bus grounding transformer if the generator neutral is isolated (as noted in 3.2.4), will be grounded with a neutral inductive reactance. If the system is not effectively grounded, as for some three-wire distribution systems, the generator neutral or grounding transformer neutral will generally be grounded through a low ohmic value resistor.

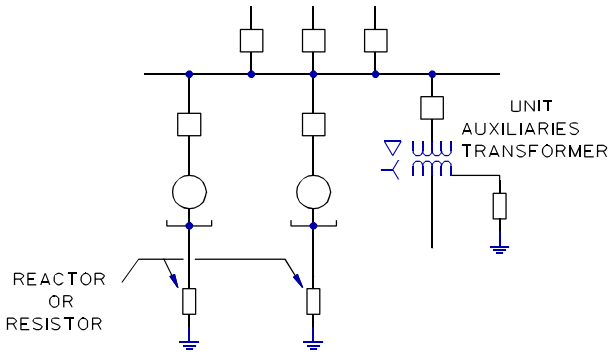

Figure 3.4.5—Generator connected directly to a distribution system

4. Protection requirements

4.1 Generator stator thermal protection

Thermal protection for the generator stator core and windings may be provided for the following contingencies:

a) Generator overload
b) Failure of cooling systems
c) Localized hot spots caused by core lamination insulation failures or by localized or rapidly developing winding failures

4.1.1 Generator overload

The continuous output capability of a generator is expressed in kilovolt-amperes (kVA) available at the terminal at a specified frequency, voltage, and power factor. For hydrogen-cooled generators, the output rating is usually given at the maximum and several lesser hydrogen pressures. For combustion-turbine generators, this capability is given at an inlet air temperature of 15 °C at sea level. In general, generators can operate successfully at rated kVA, frequency, and power factor for a voltage variation of 5% above or below rated voltage.

Under emergency conditions, it is permissible to exceed the continuous output capability for a short time. In accordance with ANSI C50.13-1989, the armature winding short-time thermal capability is given by the following:

Time (seconds)	10	30	60	120

Copyright The Institute of Electrical and Electronics Engineers, Inc.
Provided by IHS under license with IEEE
No reproduction or networking permitted without license from IHS
Not for Resale

Armature current (percent) 226 154 130 116

where

100% current is the rated current of the machine at maximum hydrogen pressure

A plot of this short-time capability is shown in figure 4.1.1. Protective schemes to prevent thermal damage to the stator winding utilize winding temperature detectors or relays having time-current characteristics that conform to the short-time capability curve.

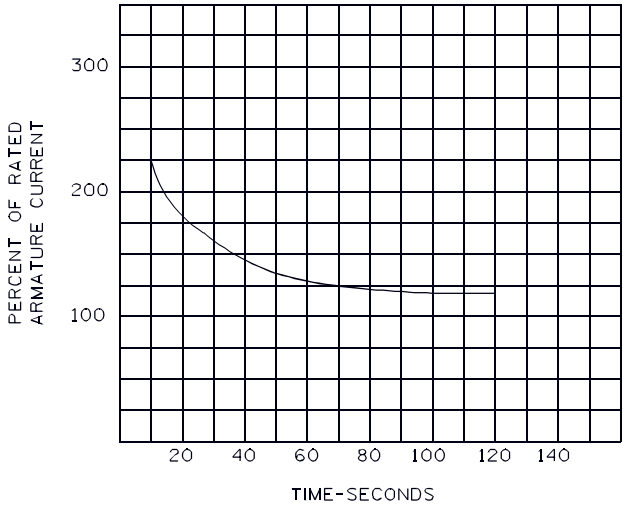

Figure 4.1.1—Turbine-generator short-time thermal capability for balanced three-phase loading (values for figure taken from ANSI C50.13-1989)

4.1.1.1 Winding-temperature protection

Most generators are supplied with a number of temperature sensors to monitor the stator windings. These sensors are usually resistance temperature detectors (RTDs) and thermocouples (TCs). As the name implies, the RTD detects temperature by the change in resistance of the sensor. A TC detects temperature by the change in thermoelectric voltage induced at the TC junction.

These sensors are used to continuously monitor the stator winding. In attended generating stations, the sensors may be connected to a data acquisition system for recording or alarm purposes.

In unattended stations, the sensors may be used with a relay to alarm, to initiate corrective action, or to trip the unit if preset temperatures limits are exceeded.

For generators with conventional (indirectly-cooled) stator windings, RTDs embedded between the top and bottom bars are used to monitor winding temperatures. For generators with inner-cooled (directly-cooled) stator windings, the stator bar coolant discharge temperature is used along with the embedded RTDs to monitor the winding temperature. The generator manufacturer should be consulted for specific recommendations on the preferred method of monitoring these sensors and temperature limits for alarm and trip purposes.

--`,,`-`-`,,`,,`,`,,`---
Copyright The Institute of Electrical and Electronics Engineers, Inc.
Provided by IHS under license with IEEE
No reproduction or networking permitted without license from IHS
Not for Resale

4.1.1.2 Overcurrent protection

In some instances, generator overload protection can be provided through the use of a torque controlled overcurrent relay that is coordinated with the ANSI C50.13-1989 short-time capability curve of figure 4.1.1. This relay consists of an instantaneous overcurrent unit and a time overcurrent unit having an extremely inverse characteristic. The instantaneous unit is set to pick up at 115% of full-load current and is used to torque control the time overcurrent unit. The instantaneous unit dropout should be 95% or higher of pickup setting.

The time overcurrent unit is set to pick up at 75–100% of full-load current and a time setting is chosen so that the relay operating time is 7.0 s at 226% of full load current. With this approach, the relay is prevented from tripping for overloads below 115% of full-load current and yet provides tripping in a prescribed time for overloads above 115% of full-load current.

An overload alarm may be desirable to give the operator an opportunity to reduce load in an orderly manner. This alarm should not give nuisance alarms for external faults and should coordinate with the generator overload protection if this protection is provided.

For air-cooled generators that may operate in a wide range of ambient temperatures, it is necessary to coordinate the ANSI C50.13-1989 thermal capability and the relay setting with the increased capability of the turbine and the generator at reduced ambient temperature. Conversely, it may be difficult to protect the generator for its reduced capability when the ambient temperature is high.

4.1.2 Failure of cooling systems

4.1.2.1 General

Depending upon rating and design, the generator stator core and windings may be cooled by air, oil, hydrogen, or water. In direct-cooled (or so-called conductor-cooled) generators, the coolant is in direct contact with the heat-producing conductors of the stator winding. In indirectly or conventionally cooled generators, the coolant cools the generator by relying on heat transfer through the insulation. For any type of generator, a failure of the cooling system can result in rapid deterioration of the stator core lamination insulation and/or stator winding conductors and insulation.

4.1.2.2 Protection

In general, the generator manufacturer provides all of the necessary protection for the cooling system. This protection is in the form of sensors such as resistance temperature detectors (RTDs), thermocouples (TC), and flow and pressure sensors. These devices are used to monitor the winding temperatures or the coolant temperature, flow, or pressure. They may be connected to alarm, to automatically reduce load to safe levels, or to trip.

For a particular machine, the user should check with the generator manufacturer to ascertain the temperature limits, the protection provided and the recommended operating procedures for a loss of coolant.

4.1.3 Core hot spots

4.1.3.1 General

Localized hot spots in the stator core can be produced by lamination insulation failure caused by misoperation (such as excessive leading power factor operation or overfluxing), by vibration due to looseness (wear of insulation or fatigue of laminations), by foreign objects left in the machine, by damage to the core during installation or maintenance, or by objects that are normally a part of the machine, (such as a nut, wedge, etc.)

--`,,`-`-`,,`,,`,`,,`---

Copyright The Institute of Electrical and Electronics Engineers, Inc.
Provided by IHS under license with IEEE
No reproduction or networking permitted without license from IHS Not for Resale

but become detached from their normal position and move to the core.

The hot spots are the result of high eddy currents, produced from core flux, that find conducting paths across the insulation between laminations. In some designs, stator laminations are electrically shorted together on the outer diameter of the core where it attaches to the stator frame. Any contact between laminations on the inner bore will result in a circuit for eddy currents. The shorting of laminations can cause melting of core steel that can be costly to repair.

4.1.3.2 Protection

The only means for detecting hot spots in air-cooled generators is through the use of RTDs and/or TCs imbedded in strategic locations. Since it is not possible or practical to cover the entire core and windings with these detectors, this approach can provide only partial detection of hot spots.

On hydrogen-cooled generators, the presence, but not the exact location of local hot spots, may be detected by the use of a generator core (or condition) monitor. The core monitor is an ion particle detector that is connected to a generator in a manner that permits a constant flow of cooling gas to pass through the monitor. Under normal conditions, the gas coolant contains no particles that can be detected by the monitor. However, when overheating occurs, the thermal decomposition of organic material, epoxy paint, core lamination enamel or other insulating materials produces a large number of particles. These particles are of submicron size and are detected by the monitor. The general location of the hot spot can be determined by laboratory analysis of the particles and through the use of selective coatings on various parts of the machine.

At present, this type of protection is normally only supplied on large steam turbine generators and is connected to sound an alarm.

4.2 Field thermal protection

Thermal protection for the generator field may be divided into the following two categories:

a) Protection for the main field winding circuit
b) Protection for the main rotor body, wedges, retaining ring, and amortisseur winding

4.2.1 Field winding protection

The field winding can operate continuously at a current equal to, or less than, that required to produce rated kVA at rated power factor and voltage. For power factors less than rated, the generator output must be reduced to keep the field current within these limits. The capability curves as defined in IEEE Std 67-1990 are determined on this basis.

Under abnormal conditions, such as short circuits and other system disturbances, it is permissible to exceed these limits for a short time. ANSI C50.13-1989 lists the short-time thermal capability for cylindrical-rotor machines. In this standard, the field winding short-time thermal capability is given in terms of permissible field voltage as a function of time as noted below.

Time (seconds)	10	30	60	120
Field voltage (percent)	208	146	125	112

A plot of this short-time capability is shown in figure 4.2.1. Protection schemes utilize this characteristic to prevent thermal damage to the field winding circuit.

--`,,`,,`-`-`,,`,,`,`,,`---
Copyright The Institute of Electrical and Electronics Engineers, Inc.
Provided by IHS under license with IEEE
No reproduction or networking permitted without license from IHS
Not for Resale

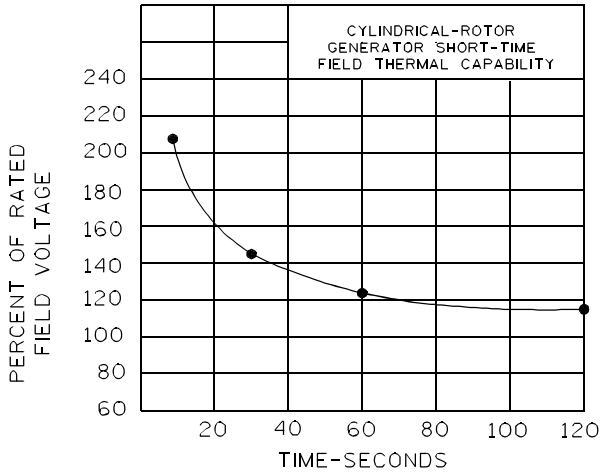

Figure 4.2.1—Generator field short-time thermal capability (values taken from ANSI C50.13-1989)

4.2.1.1 Thermal protection

Since it is not practical to put temperature sensors directly in the field windings, only indirect monitoring of the field winding temperature is normally possible. For excitation systems employing main field collector rings, the average temperature of the field winding can be approximated by calculating the field resistance using simultaneous field current and voltage readings. This resistance, in conjunction with the known cold resistance, is a measure of the operating temperature. This method, described in IEEE Std 67-1990, gives only an indication of the average temperature throughout the field winding and not the more important hot-spot temperature.

Moreover, this method is not applicable with brushless excitation systems where the actual main field current and voltage are not available for measurement.

If a generator is equipped with a core monitor as described in 4.1.3, the monitor will also detect overheating of the field winding.

4.2.1.2 Protection for field overexcitation

Some form of over-excitation protection for the field winding is generally provided utilizing the short-time capability curve of figure 4.2.1. Several different schemes are available using relays or excitation system control elements, or both.

4.2.1.2.1 Fixed-time delay relaying scheme

The simplest form of field protection utilizes a contact making milliammeter or voltmeter connected in either the main field circuit or in the field of the ac exciter. This device is set to pick up when the field current exceeds its rated full-load value. When an overexcitation condition occurs, the device will pick up and perform the following functions:

a) Sound an alarm.
b) Adjust field excitation to a preselected value corresponding to rated full-load level or less.

Copyright The Institute of Electrical and Electronics Engineers, Inc.
Provided by IHS under license with IEEE
No reproduction or networking permitted without license from IHS Not for Resale

c) After a fixed-time delay, trip the generator regulator or transfer to an alternate control.
d) If overexcitation is not eliminated after some additional short-time interval, trip the unit.

This scheme will protect the field for overexcitation conditions during system disturbances and for the rare occurrence of a faulty excitation system component. While simple in form, this scheme has the disadvantage that it will overprotect the machine, since the fixed time delay relay must be set for the maximum possible overexcitation condition that can occur. This means that for less severe overexcitation conditions, tripping will occur at shorter times than is required and, therefore, full advantage of the inverse-time thermal capability of the field winding characteristic cannot be obtained.

4.2.1.2.2 Inverse time delay relaying scheme

This approach utilizes a voltage relay whose characteristic approximately matches the inverse time characteristic of figure 4.2.1. This relay may be connected at the terminals of an ac exciter alternator, in the main generator field or in the field of the ac exciter. When connected to a field circuit, a transducer is used to convert the dc signal to an ac quantity. The relay is normally set so that there is 5–10% margin between the relay characteristic and the field capability curve.

This relay, in conjunction with one or more timers, performs the same functions as the preceding scheme. For an overexcitation condition, it will:

a) Sound an alarm.
b) Adjust the field excitation to a preselected value corresponding to rated full-load level or less.
c) After some delay, trip the generator regulator or transfer to an alternate control.
d) Trip the unit if overexcitation is not eliminated.

This scheme provides protection for overexcitation conditions as well as for possible excitation system failures.

4.2.1.2.3 Voltage regulator system

Modern excitation systems usually incorporate the field protective functions as well as the regulating function. These systems may have built-in circuitry that duplicates the fixed time and/or the inverse time relaying function. When an overexcitation condition occurs and field current exceeds a safe value for a specified period of time, these protective functions will reduce field current to the full-load value or to some other predetermined level. On some excitation systems, if the overexcitation condition persists after an attempt to reduce field current is made, the protective function will trip the regulator or transfer to an alternate exciter after a short period of time. If this does not eliminate the problem, the generator may be tripped. In this type of excitation system, the protective function is separate from the excitation function, and, therefore, can provide protection when there are failures in the regulating systems or when the regulator is not in the control circuit.

If the protective function is part of the regulating system, the protection would be eliminated when the regulator is tripped or is out of service. For this type of system, supplementary relay protection as described in the preceding can be provided.

4.2.2 Rotor body

There are no simple methods for direct thermal protection of the rotor. Various indirect methods are used either to approximate rotor temperatures or to act directly on the quantities that would lead to excessive rotor temperatures. Protection schemes for the rotor are, therefore, directed at the potential causes of thermal distress. For example, negative-sequence currents in the stator, loss of excitation, or loss of synchronism can cause excessive rotor temperatures due to circulating currents in various paths of the rotor body. These

Copyright The Institute of Electrical and Electronics Engineers, Inc.
Provided by IHS under license with IEEE
No reproduction or networking permitted without license from IHS
Not for Resale

phenomena and associated protective schemes are covered in 4.5.

4.3 Generator stator fault protection

4.3.1 General consideration

Generator faults are always considered to be serious since they can cause severe and costly damage to insulation, windings, and the core; they can also produce severe mechanical torsional shock to shafts and couplings. Moreover, fault currents in a generator do not cease to flow when the generator is tripped from the system and the field disconnected. Fault current can continue to flow for many seconds because of trapped flux within the machine, thereby increasing the amount of fault damage.

As a consequence, for faults in or near the generator that produce high magnitudes of short-circuit currents, some form of high-speed protection is normally used to trip and shut down the machine as quickly as possible in order to minimize damage. Where external impedances are used to limit fault currents to a few amperes, slower forms of protection may be justified. In certain cases, it may be justified to consider the use of rapid de-excitation methods that produce a faster decay of fault currents.

4.3.2 Phase-fault protection

Some form of high-speed differential relaying is generally used for phase-fault protection of generator stator windings. Differential relaying will detect three-phase faults, phase-to-phase faults, double-phase-to-ground faults, and some single-phase-to-ground faults, depending upon how the generator is grounded.

Differential relaying will not detect turn-to-turn faults in the same phase since there is no difference in the current entering and leaving the phase winding. Where applicable, separate turn fault protection can be provided with the split-phase relaying scheme. This scheme will be discussed subsequently.

Differential relaying will not detect stator ground faults on high impedance grounded generators. The high impedance normally limits the fault current to levels considerably below the practical sensitivity of the differential relaying.

The high-impedance differential relay may be less tolerant to ct errors caused by proximity effects than the percentage restrained type of differential relay.

4.3.2.1 Variable slope percentage differential relay

The variable slope percentage differential relay is the most widely used form of differential relaying for generator protection. In this type of relay, the percentage slope characteristic can vary from about 5% at low values of through current up to 50% or more at high values of through current as illustrated in figure 4.3.2-1. This characteristic results in a relay that is very sensitive to internal faults and insensitive to current transformer error currents during severe external faults.

Copyright The Institute of Electrical and Electronics Engineers, Inc.
Provided by IHS under license with IEEE
No reproduction or networking permitted without license from IHS Not for Resale

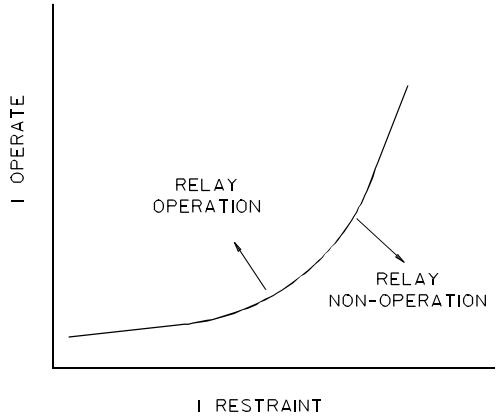

Figure 4.3.2-1—Variable slope differential relay

Current transformers with identical characteristics should be used in a generator differential scheme. Proper operation of the scheme requires that the cts' performance during fault conditions is not degraded due to excessive burdens in the circuits. Therefore, care should be exercised when other relays or devices are used in these current circuits.

In some cases, proximity effects can affect the accuracy of the current transformers, particularly at the neutral ends of generators, where cts on one phase may be physically close to other phase conductors. In such cases, care is required to ensure that the resulting differential currents are less than the minimum sensitivity of the percentage restrained relay.

4.3.2.2 High-impedance differential relay

As the name implies, this is a high-impedance relay connected in a differential circuit as shown in figure 4.3.2-2. The relay discriminates between internal and external faults by the voltage, which appears across the relay. On external faults, the voltage across the relay will be low, while for internal faults, the voltage across the relay is relatively high.

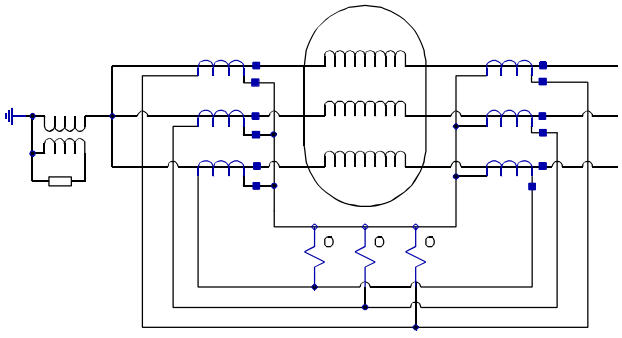

Figure 4.3.2-2—High-impedance differential

The relay may be set to operate for stator winding three-phase or phase-to-phase fault currents as low as 2% of rated generator current.

Copyright The Institute of Electrical and Electronics Engineers, Inc.
Provided by IHS under license with IEEE
No reproduction or networking permitted without license from IHS
Not for Resale

The current transformers (cts) used in this scheme, such as bushing current transformers with fully distributed secondary windings, should have identical characteristics and should have negligible leakage reactance.

4.3.2.3 Self-balancing differential scheme

The self-balancing differential scheme has been used for phase and ground faults on small generators with low-resistance neutral grounding. This scheme is illustrated in figure 4.3.2-3. As shown, leads from both ends of the phase winding are placed in the opening of a window-type current transformer. Any difference between the currents entering and leaving the winding is detected by an instantaneous overcurrent relay. Where applicable, this scheme is capable of providing very sensitive phase and ground fault protection.

Since these cts see a difference current that is normally near zero under nominal system conditions, they are usually not designed to carry continuous load current. This allows the use of cts with low ANSI accuracy designation and very low ct ratios. The measuring of difference current allows the relay to be set very sensitively to detect very low ground faults within the stator. Use of a low ratio may cause the fault current to be much higher than the 20 times rated current of the ct. Because of this, care should be taken to evaluate the relay burden and the ct saturation characteristics at the required fault current levels to assure accurate pickup of the relay and sufficient secondary current to operate the relay.

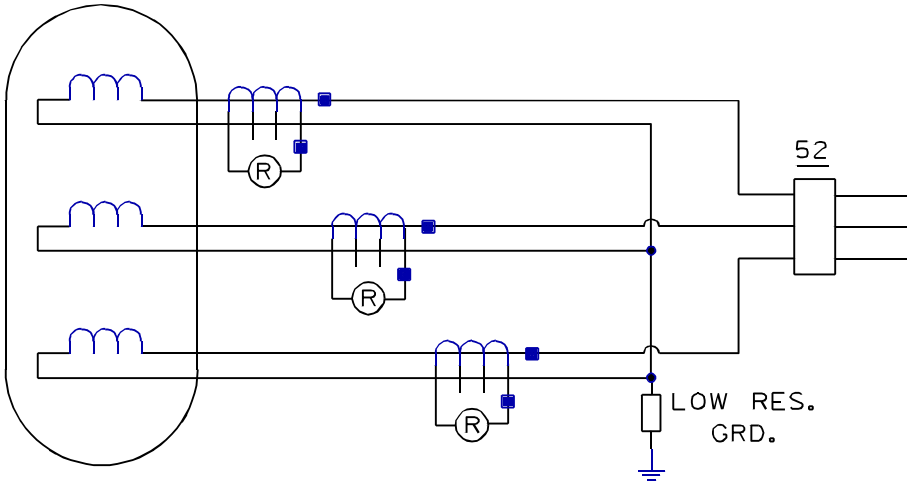

Figure 4.3.2-3—Self-balancing protection scheme

4.3.2.4 Application of differential relaying to different machine configurations

The application of phase-fault protection to the various machine configurations discussed in 3.1 of this guide is illustrated in figures 4.3.2-4 through 4.3.2-8. Figure 4.3.2-4 illustrates the differential connections for a six-bushing machine having single-turn coils and one or more circuits per phase. This is the most widely used machine configuration.

Copyright The Institute of Electrical and Electronics Engineers, Inc.
Provided by IHS under license with IEEE
No reproduction or networking permitted without license from IHS
Not for Resale

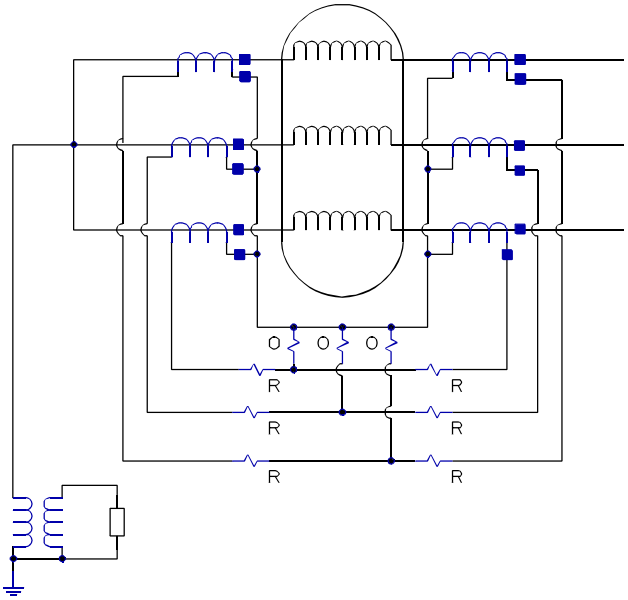

Figure 4.3.2-4—Percentage differential relay connection for six-bushing wye-connected generator

Figure 4.3.2-5 illustrates the application of split-phase relaying and differential protection on generators having multi-turn coils and two or more circuits per phase. This combination is often used on hydro-generators. The application of split-phase relaying should be specified in the design of the generator so that the cts required for this protection can be economically and appropriately engineered into the design.

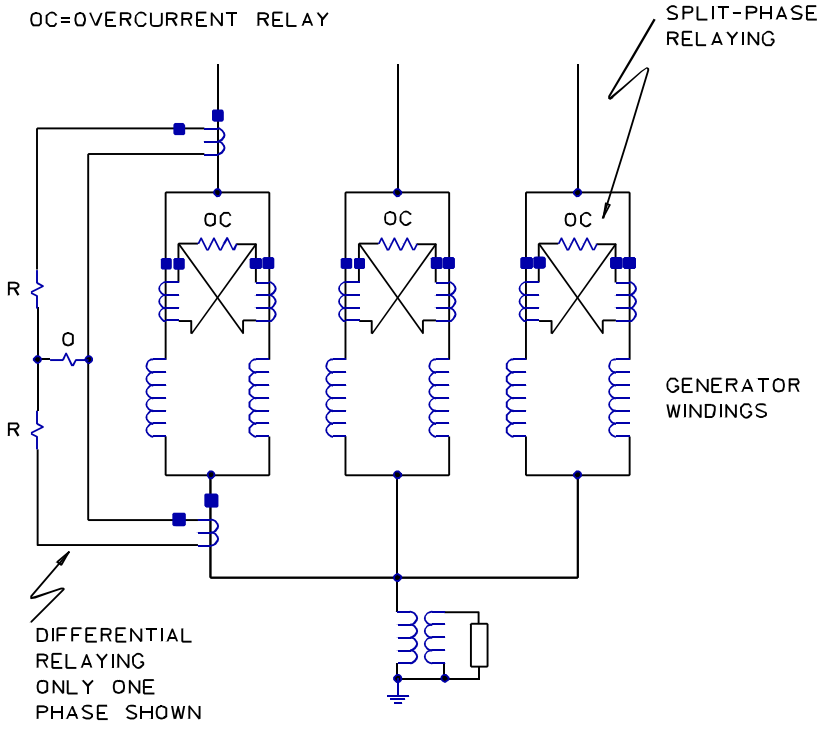

Figure 4.3.2-5—Application of split-phase and differential relaying

Copyright The Institute of Electrical and Electronics Engineers, Inc.
Provided by IHS under license with IEEE
No reproduction or networking permitted without license from IHS
Not for Resale

Another scheme that has been used on this type of generator is shown in figure 4.3.2-6. This arrangement is an attempt to get the benefits of split-phase and differential protection with a reduction in the number of cts and relays; however, this arrangement is not as sensitive as the separate split-phase relaying and differential relaying scheme shown in figure 4.3.2-5. The scheme in figure 4.3.2-6 requires neutral-end cts having half the turns ratio of the terminal-end cts.

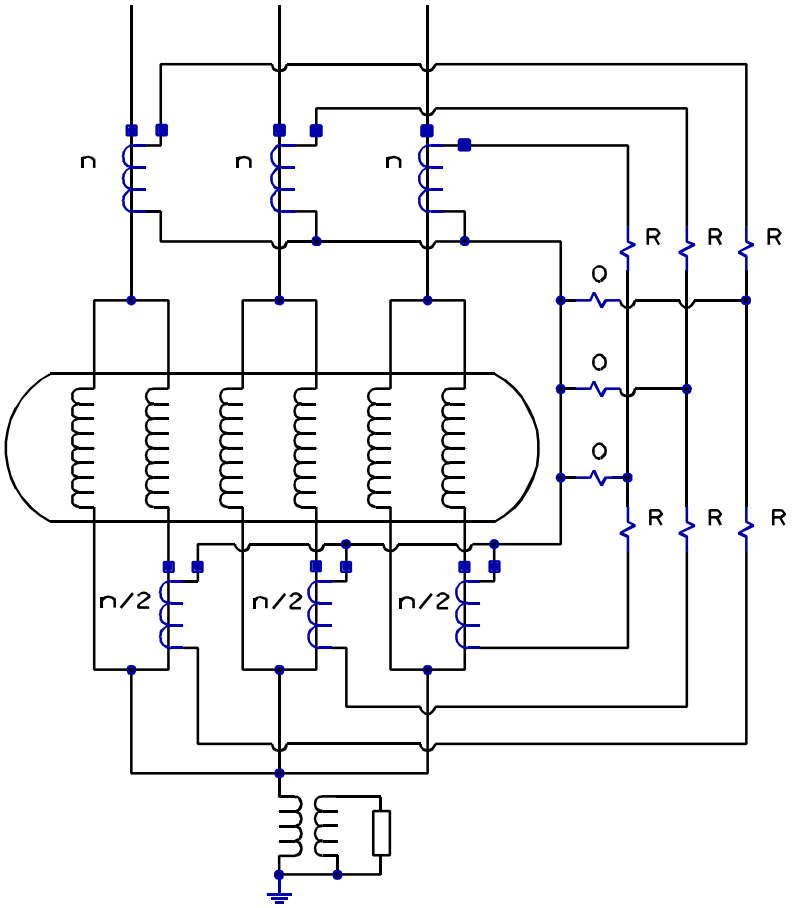

Figure 4.3.2-6—Combination split-phase and differential relaying

Figure 4.3.2-7 illustrates the protection for a two-winding twelve-bushing generator. In this arrangement, separate differential relaying is used to protect each winding. This provides protection for faults between windings and for phase-to-phase and three-phase faults. In general, it is not recommended that the cts in each winding be paralleled and a single differential relay used. Such an approach would not provide protection for all faults between windings, since for some conditions, the fault current would circulate only between the paralleled cts and would not appear in the relay.

Copyright The Institute of Electrical and Electronics Engineers, Inc.
Provided by IHS under license with IEEE
No reproduction or networking permitted without license from IHS
Not for Resale

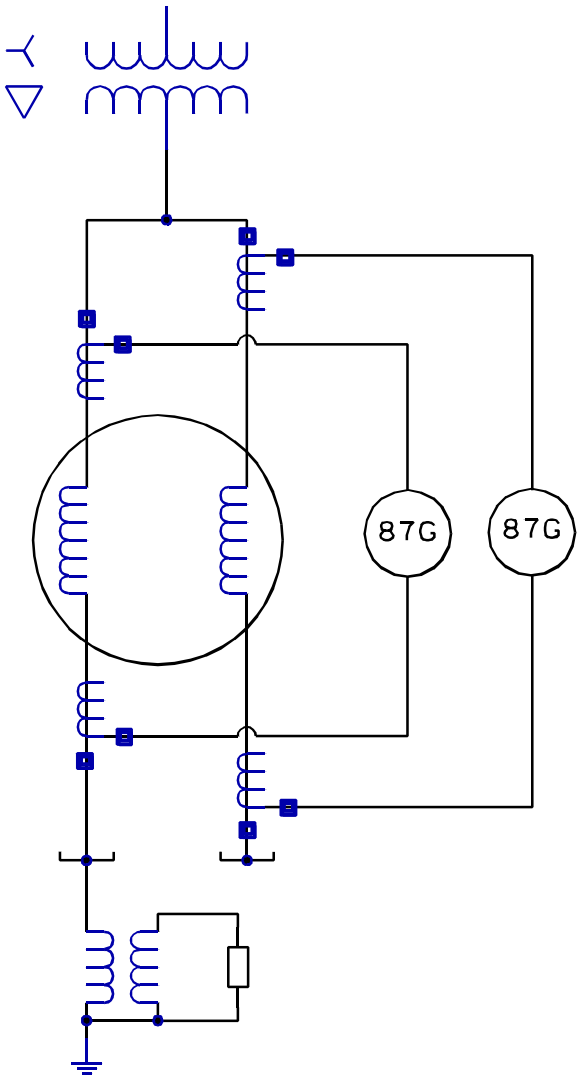

Figure 4.3.2-7—12 Bushing generator (single phase shown)

Copyright The Institute of Electrical and Electronics Engineers, Inc.
Provided by IHS under license with IEEE
No reproduction or networking permitted without license from IHS
Not for Resale

Figure 4.3.2-8 shows the typical differential relaying arrangement used for a delta-connected generator.

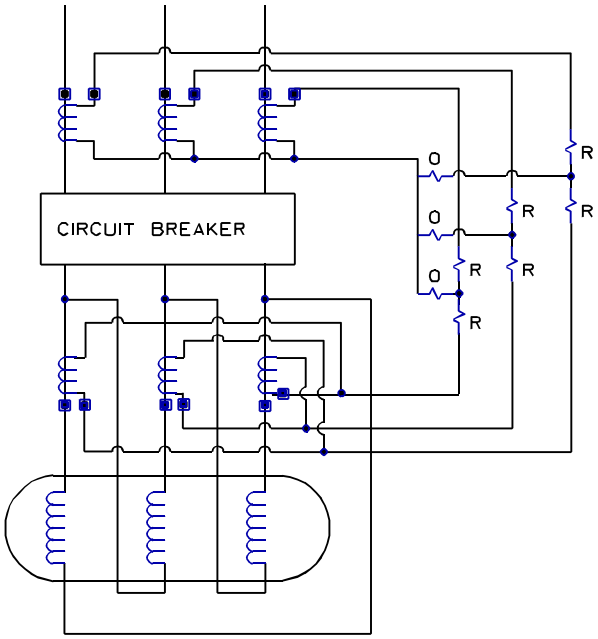

Figure 4.3.2-8—Percentage differential relay connection—Delta-connected generator

4.3.2.5 Turn fault frotection

Most turbine generators have single-turn stator windings. If a generator has stator windings with multi-turn coils and with two or more circuits per phase, the split-phase relaying scheme can be used to provide turn fault protection. In this scheme, the circuits in each phase of the stator winding are split into two equal groups and the currents of each group are compared. A difference in these currents indicates an unbalance caused by a single-turn fault. Figure 4.3.2-9 illustrates the basic split-phase relaying system using bushing type current transformers. The relays used in this scheme usually consist of an instantaneous overcurrent relay and a very inverse time overcurrent relay.

Copyright The Institute of Electrical and Electronics Engineers, Inc.
Provided by IHS under license with IEEE
No reproduction or networking permitted without license from IHS
Not for Resale

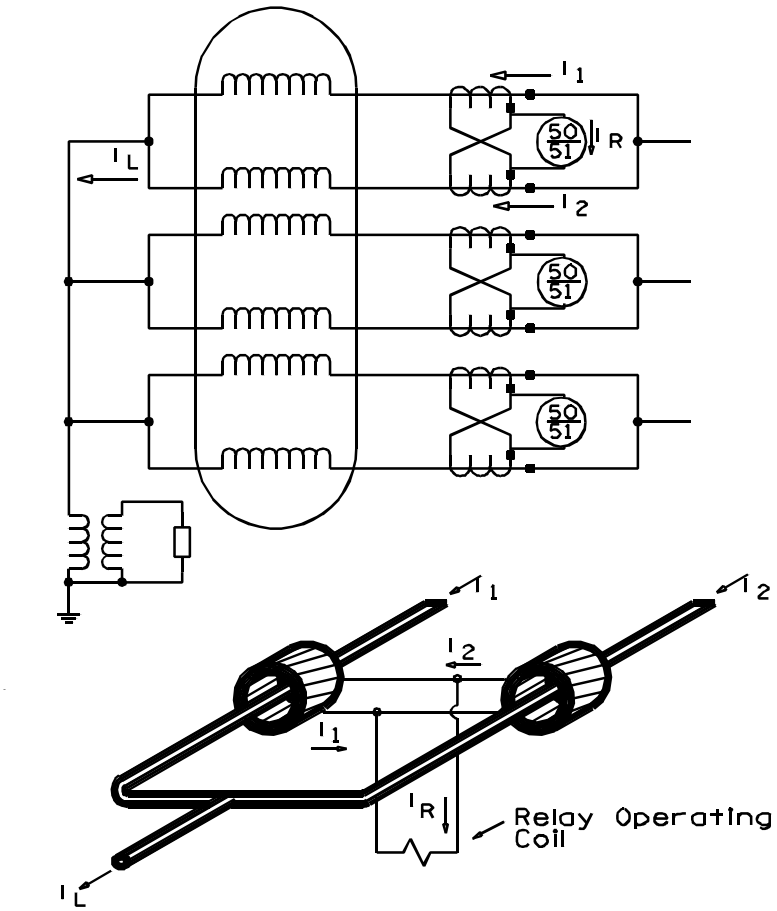

Figure 4.3.2-9—Split-phase protection using separate current transformers

Since there is normally some current unbalance between windings, the time overcurrent relay is set so that it will not respond to this normal unbalance, but will pick up for the unbalance caused by a single turn fault. Time delay is employed to prevent operation on ct transient error currents that may occur during external faults.

The pickup of the instantaneous unit shall be set above the ct error currents that may occur during external faults. The resulting setting will generally be such that it will offer little turn fault protection. However, it can provide inexpensive backup for multi-turn and phase faults.

The problem of ct error currents with the arrangement of figure 4.3.2-9 can be eliminated by using single window or double window cts.

Figure 4.3.2-10 illustrates the single window ct arrangement. In this approach, the single window ct eliminates the error currents because of its common core design. The fluxes produced by the primary currents balance each other in the magnetic structure and only the difference current produces an output in the secondary circuit. Therefore, the relays in the secondary more nearly see only the unbalanced current between the circuit groupings. This permits more sensitive instantaneous relay settings. The single-window ct approach is generally restricted to small machines because of physical and insulation problems in arranging the winding leads in the window ct.

--`,,`-`-`,,`,,`,`,,`---
Copyright The Institute of Electrical and Electronics Engineers, Inc.
Provided by IHS under license with IEEE
No reproduction or networking permitted without license from IHS
Not for Resale

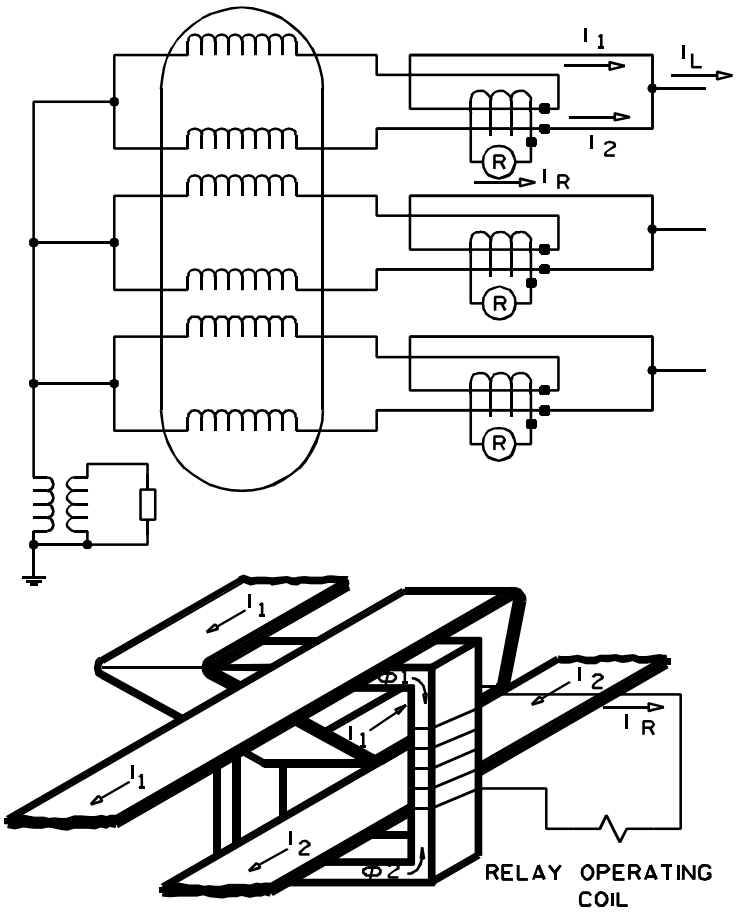

Figure 4.3.2-10—Split-phase protection using a single-window ct

The double-window ct provides the same advantages of the single window approach but without its physical restrictions. The double-window ct approach is shown in figure 4.3.2-11. Again, in this approach only the difference between the primary currents produces an output in the secondary circuit, therefore permitting more sensitive instantaneous relay settings.

If the generator has an odd number of circuits per phase, it still may be possible to provide split-phase protection using separate ct's as shown in figure 4.3.2-9. The currents in the two circuit grouping would not be equal in this case and, therefore, ct ratios would have to be selected to give equal secondary currents during balanced conditions. In this instance, the single- or double-window ct approach would not be applicable since the relays would have to be set above a large difference current, making the scheme virtually insensitive to turn faults.

Split-phase protection will detect phase and some ground faults in the stator winding. However, because of the slow operating time of this protection, it is common practice to provide standard high-speed differential protection for each phase and separate ground fault protection.

Copyright The Institute of Electrical and Electronics Engineers, Inc.
Provided by IHS under license with IEEE
No reproduction or networking permitted without license from IHS Not for Resale

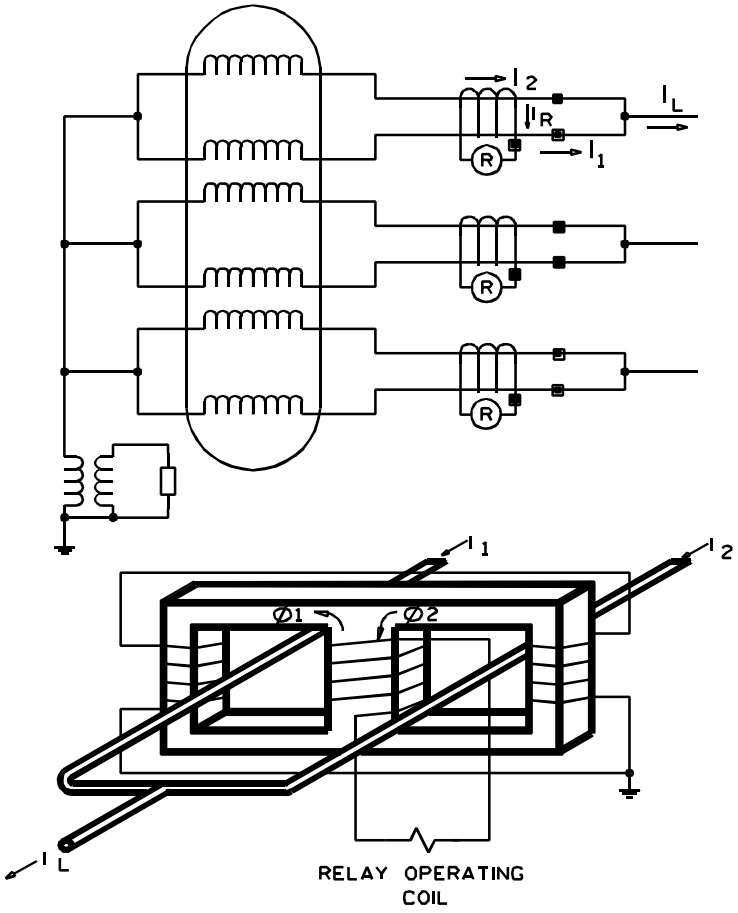

Figure 4.3.2-11—Split-phase protection using double-primary single-secondary ct

4.3.2.6 Backup protection

The type and sophistication of backup protection provided is dependent to some degree upon the size of the generator and on the method of connecting the generator to the system.

When a generator is connected to the system in the unit generator-transformer configuration, high-speed phase fault backup protection can be obtained by extending the protective zone of the unit transformer differential relay scheme to include the generator, the interconnecting leads, and the unit auxiliaries transformer. This backup is often referred to as the overall differential scheme and is illustrated in figure 4.3.2-12.

In this arrangement, the cts in the unit auxiliaries transformer circuit must be high-ratio ct's in order to balance the differential circuit. The required ratio may be obtained with a single bushing ct or with a combination of bushing and auxiliary ct.

In some cases, the unit auxiliaries transformer may be excluded from the overall differential scheme as indicated by the alternate connection. This approach may introduce a blind spot in the protection for the unit auxiliaries transformer. For faults near the high side of this transformer, the available fault current may be

Copyright The Institute of Electrical and Electronics Engineers, Inc.
Provided by IHS under license with IEEE
No reproduction or networking permitted without license from IHS
Not for Resale

150 to 200 times the rating of the current transformers used in the differential scheme for the unit auxiliaries transformer. This high current level would drive the cts into saturation, resulting in little or no current output to the differential relays. This blind spot is eliminated by connecting the overall differential scheme to the low side of the unit auxiliaries transformer. The overall scheme will detect the severe faults, while the unit auxiliaries differential will detect the low-level faults.

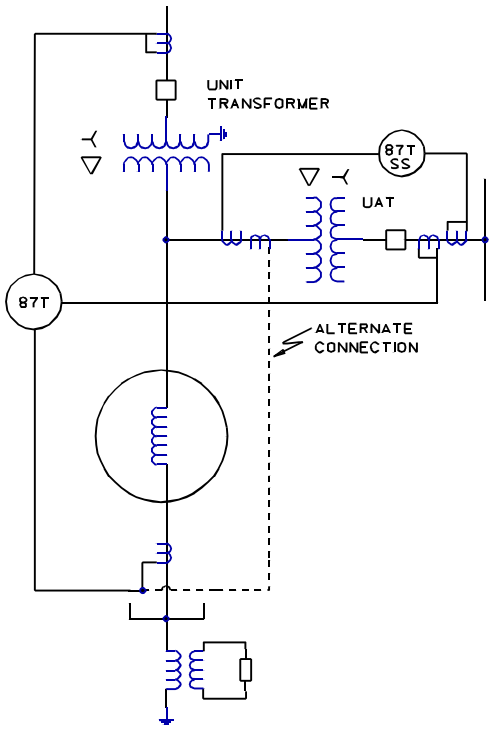

Figure 4.3.2-12—Generator phase fault backup overall differential scheme

Figures 4.3.2-13 and 4.3.2-14 illustrate the application of the overall differential scheme on a two-winding generator and on a cross-compound generator, respectively, where both types of generators are connected in a unit generator-transformer configuration.

Copyright The Institute of Electrical and Electronics Engineers, Inc.
Provided by IHS under license with IEEE
No reproduction or networking permitted without license from IHS Not for Resale

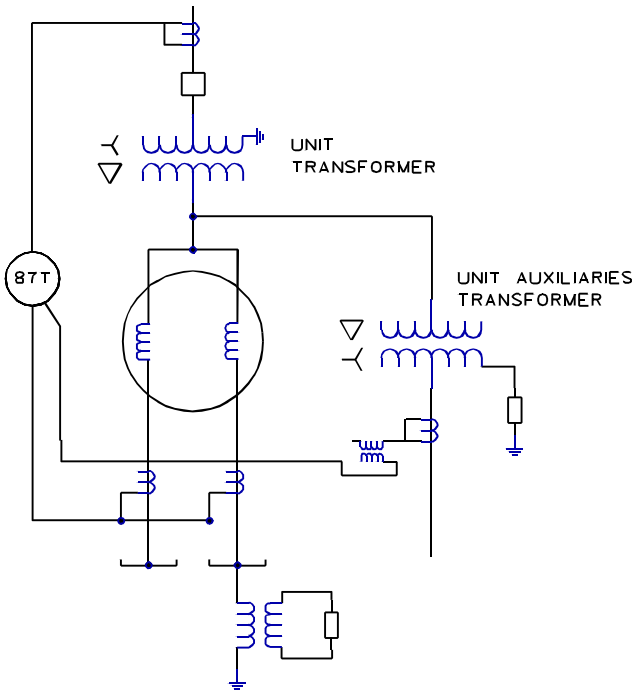

Figure 4.3.2-13—Phase fault backup for a two-winding generator

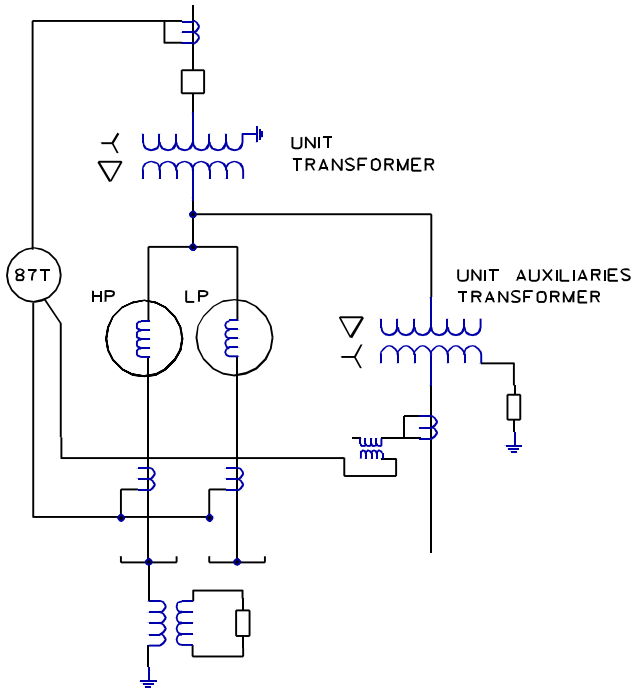

Figure 4.3.2-14—Phase fault backup for cross-compound generator

Copyright The Institute of Electrical and Electronics Engineers, Inc.
Provided by IHS under license with IEEE
No reproduction or networking permitted without license from IHS
Not for Resale

Where generators are bussed at generator voltage as shown in figures 3.4.4 and 3.4.5, or where generator breakers are used in the unit generator-transformer configuration as shown in figure 3.4.2, the overall differential scheme is not applicable and a duplicate differential scheme is rarely used to provide phase fault backup protection. In these configurations, it is common practice to use the unbalanced current protection (negative sequence current relay) and system backup protection to provide backup for all generator phase faults. This protection is discussed in detail in 4.5.2 and 4.6. This backup relaying is generally less sensitive than differential relaying and has time delay associated with it.

4.3.2.7 Tripping modes

It is common practice to have the primary and backup protection energize separate hand-reset multicontact auxiliary relays. These auxiliary relays simultaneously initiate the following:

a) Trip the main generator breaker(s)
b) Trip the field and/or exciter breakers
c) Trip the prime mover
d) Turn on CO_2 internal generator fire protection if provided
e) Operate an alarm and/or annunciator
f) Transfer the station service to the standby source

4.3.3 Ground fault protection

Protective schemes, which are designed to detect three-phase and phase-to-phase stator faults, are not intended to provide protection for phase-to-ground faults in the generator zone. The degree of ground fault protection provided by these schemes is directly related to how the generator is grounded and, therefore, to the magnitude of the ground-fault current available. The maximum phase-to-ground fault current available at the generator terminals may vary from three-phase fault current levels or higher to almost zero. In addition, the magnitude of stator ground-fault current decreases almost linearly as the fault location moves from the stator terminals toward the neutral of the generator. For a ground fault near the neutral of a wye-connected generator, the available phase-to-ground fault current becomes small regardless of the grounding method.

As noted in the preceding subclause, differential relaying will not provide ground fault protection on high-impedance-grounded machines where primary fault current levels are limited to 3–25 A. Differential relaying schemes may detect some stator phase-to-ground faults depending upon how the generator is grounded. Figure 4.3.3-1 illustrates the approximate relationship between available ground fault current and the percent of the stator winding protected by a current-differential scheme. When the ground fault current level is limited below generator rated load current, a large portion of the generator may be unprotected.

Since the available ground-fault current may be small or limited to low values, it is common practice to provide separate sensitive ground fault protection for generators. Depending on the generator grounding method, the protection provided may include both primary and backup relaying or may be used to supplement whatever protection may be provided by differential relaying.

Copyright The Institute of Electrical and Electronics Engineers, Inc.
Provided by IHS under license with IEEE
No reproduction or networking permitted without license from IHS Not for Resale

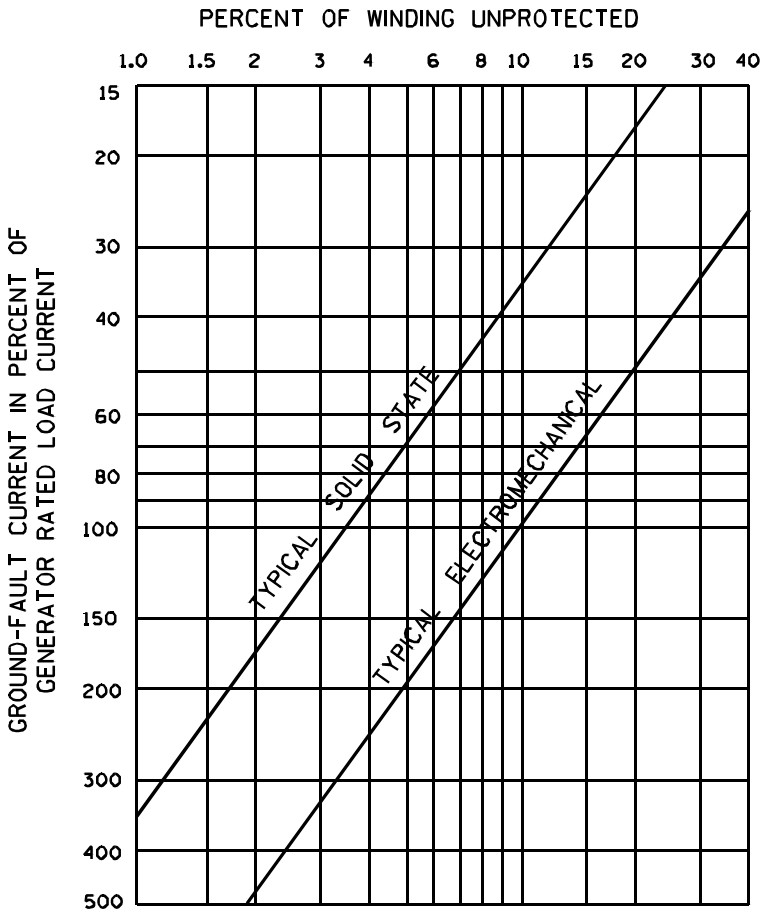

Figure 4.3.3-1—Percent of stator winding unprotected by differential relay for phase-to-ground fault

Numerous schemes have been developed and used to provide sensitive ground fault protection for generators and are discussed in considerable detail in IEEE Std C37.101-1993.

High-impedance grounding is generally used with unit system installations where a single generator or cross-compound generators are connected to the system through individual grounded wye-delta step-up transformers. The protection on a single unit generator-transformer arrangement is illustrated in figures 4.3.3-2 and 4.3.3-4.

Where cross-compound generators are bussed at generator voltage or where a single generator has double windings, it is the practice to ground only one unit or winding as shown in figure 4.3.3-3. Protection for both units and/or windings is provided by the one set of ground relays. Some types of 100% stator ground fault protection require relays for each neutral. The following discussion covers only the most widely used schemes for the four grounding methods considered in 3.2.

4.3.3.1 High-impedance grounding

As noted in 3.2.1, two types of high-impedance grounding are in use today as follows:

Copyright The Institute of Electrical and Electronics Engineers, Inc.
Provided by IHS under license with IEEE
No reproduction or networking permitted without license from IHS
Not for Resale

a) High-resistance grounding
b) Ground fault neutralizer grounding

In both cases, the ground-fault current is limited to such low levels that differential relaying will not detect phase-to-ground faults. Therefore, for high-impedance grounded generators, it is common practice to provide separate primary and backup relaying for ground-fault protection.

4.3.3.1.1 Protection

The most widely used protective scheme with the resistance-loaded distribution transformer method of grounding is a time delay overvoltage relay, 59GN, connected across the grounding impedance to sense zero-sequence voltage as shown in figure 4.3.3-2.

The relay used for this function is designed to be sensitive to fundamental-frequency voltage and insensitive to third-harmonic and other higher harmonic voltages that may be present at the generator neutral.

Since the grounding impedance is large compared to the generator impedance and other impedances in the circuit, the full phase-to-neutral voltage will be impressed across the grounding device for a phase-to-ground fault at the generator terminals. The voltage on the relay is a function of the distribution transformer ratio and the location of the fault. The voltage will be a maximum for a terminal fault and decreases in magnitude as the fault location moves from the generator terminals toward the neutral.

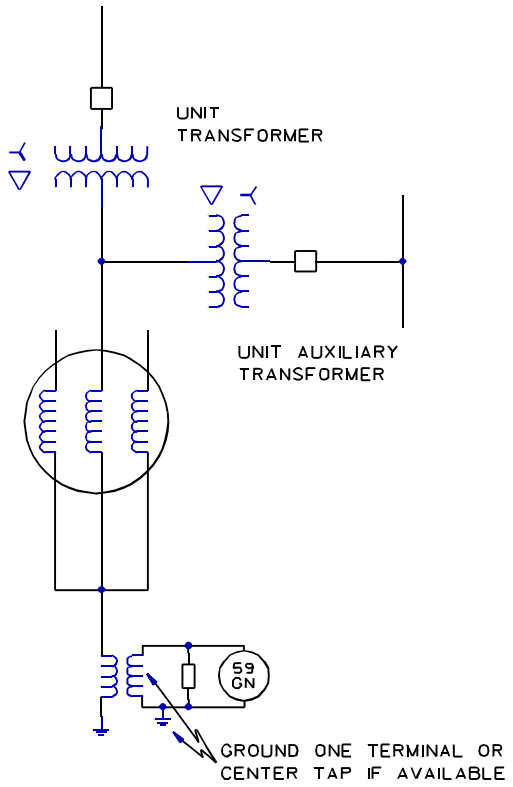

Figure 4.3.3-2—Generator ground fault protection for high-impedance grounded generator

Copyright The Institute of Electrical and Electronics Engineers, Inc.
Provided by IHS under license with IEEE
No reproduction or networking permitted without license from IHS
Not for Resale

Typically, the overvoltage relay has minimum pickup setting of approximately 5 V. With this setting and with typical distribution transformer ratios, this scheme is capable of detecting faults to within 2–5% of the stator neutral.

It should be noted that for personnel safety the distribution transformer secondary winding is usually grounded at one point as shown in figure 4.3.3-2. This point may be at one terminal of the secondary winding, or at a center tap, if available.

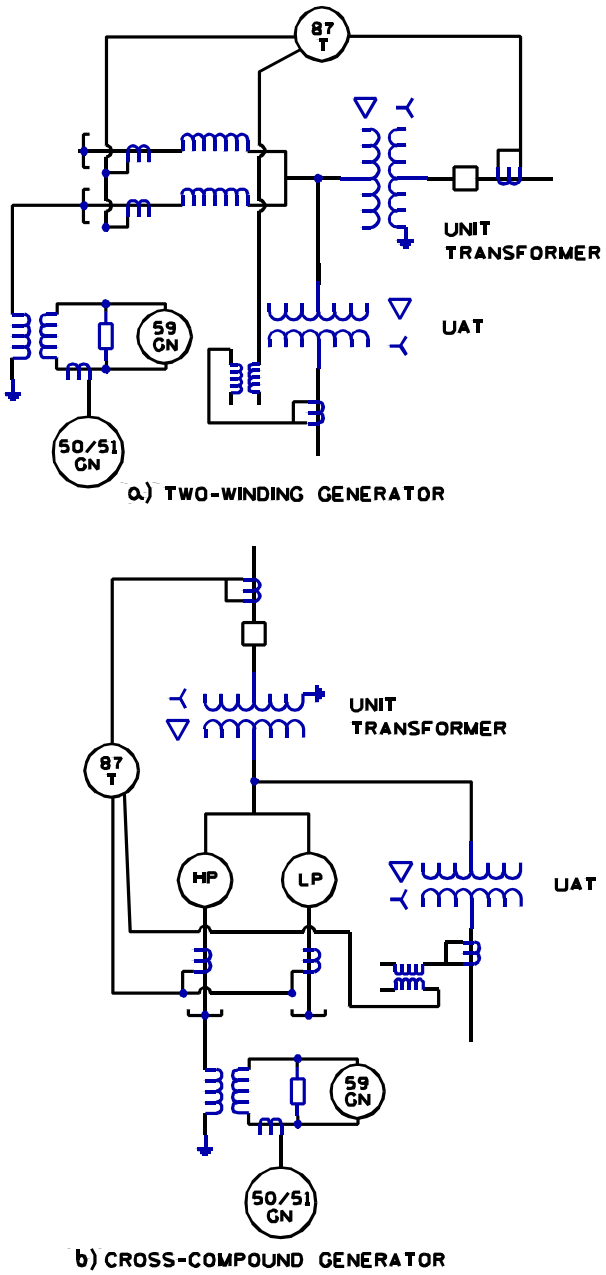

Figure 4.3.3-3—Ground protection for a two-winding or cross-compound generator

Copyright The Institute of Electrical and Electronics Engineers, Inc.
Provided by IHS under license with IEEE
No reproduction or networking permitted without license from IHS
Not for Resale

The time setting for the voltage relay is selected to provide coordination with other system protective devices. Specific areas of concern are the following:

a) When grounded wye-grounded wye voltage transformers are connected at the machine terminals, the voltage relay must be time coordinated with voltage transformer fuses for faults on the transformer secondary windings. If relay time delay for coordination is not acceptable, the coordination problem can be alleviated by grounding one of the secondary phase conductors instead of the secondary neutral. When this technique is used, the coordination problem still exists for ground faults on the secondary neutral. Thus, its usefulness is limited to those applications where the exposure on the secondary neutral-to-ground faults is small.

b) The voltage relay may have to be coordinated with system relaying for system ground faults. System phase-to-ground faults will induce zero-sequence voltages at the generator due to capacitive coupling between the windings of the unit transformer. This induced voltage will appear on the secondary of the grounding distribution transformer and may cause operation of the zero-sequence voltage relay.

In general, a long time delay setting for an inverse time relay has been found necessary to provide adequate coordination with voltage transformer fuses and system ground relaying. Shorter time delays have been used where the voltage transformer secondary neutral is isolated and a secondary phase conductor grounded and where high-speed ground relaying is used on the high-voltage system.

A time overcurrent relay with instantaneous element may be used as primary or backup protection when the generator is grounded through a distribution transformer with a secondary resistor. The current transformer supplying the overcurrent relay may be located in the generator neutral or in the secondary circuit of the distribution transformer as shown in figure 4.3.3-4. When the current transformer is connected directly in the neutral, a 5:5 A ct ratio is employed. When the current transformer is connected in the distribution transformer secondary circuit, the ct ratio should be selected so that the maximum current in the 50/51GN relay is approximately the same as the maximum generator ground fault amperes. In either case, the accuracy of the ct must be carefully assessed, bearing in mind the possible high burden if electromechanical relays with sensitive settings are connected.

With the generator on line, there will be a continuous flow of current in the 50/51GN relay caused by the stray capacitances of the system being protected. This current will consist mostly of harmonics of the fundamental frequency, principally the third. It will vary directly with the real and reactive power on the machine, so that the maximum current flow will occur with the unit fully loaded. If the secondary resistor is properly selected, this value will seldom exceed 0.5 A, where the maximum fault current (in the generator and in the ground relay) approaches 10 A.

Copyright The Institute of Electrical and Electronics Engineers, Inc.
Provided by IHS under license with IEEE
No reproduction or networking permitted without license from IHS Not for Resale

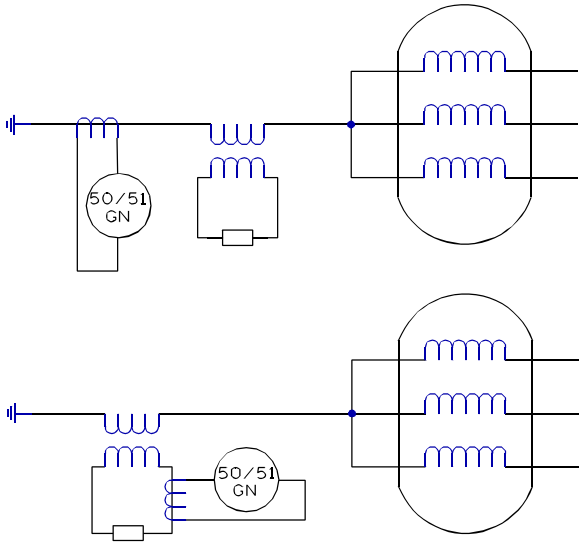

Figure 4.3.3-4—Backup ground overcurrent protection

It is important that the current in the 50/51GN relay be measured with the unit running at full load. For example, if the relay pickup is set for 135% of the measured value, this protection will typically provide for 90–95% of the stator winding. See IEEE Std C37.101-1993. A relay insensitive to harmonics can be set at a lower pickup, providing more protection to the stator.

Since a voltage may exist at the generator neutral when a fault occurs on the high tension side of the GSU transformer, some time delay must be provided for the 50/51GN TOC unit. Otherwise, the machine may be incorrectly tripped for a transmission system fault. The setting should also prove adequate for coordination with the generator potential transformer fuses.

The IOC unit in the 50/51GN relay will provide high-speed tripping of the generator field and generator high side breakers for ground faults in the transformer delta windings and the bus work connected to the generator terminals. It will also give high-speed protection for all faults in the first 50–70% of the generator, measuring in from the high voltage end of the machine. Thus, the IOC unit is extremely valuable in limiting machine damage, particularly in the case of nearly simultaneous ground faults on two different phases. However, if it is desired to coordinate the 50/51GN relay with the generator potential transformer fuses, the IOC unit will have to be connected to alarm only. This will still prove of considerable value, since the action or inaction of this unit will aid in the frequently difficult task of determining fault location.

Some utilities have used overcurrent relays on generators grounded through a ground fault neutralizer. In this case an overcurrent relay will provide protection only in case of failure of the tunable reactor or distribution transformer.

As noted previously, the zero-sequence voltage relay will detect faults to within 2–5% of the stator neutral. There are several schemes for detecting ground faults at or near the neutral.

In one approach, a recording voltmeter connected across the grounding impedance records the harmonic voltages which are always present at the generator neutral. A sudden reduction in voltage reading would indicate a phase-to-ground fault in the vicinity of the stator neutral or a failure in the grounding equipment. An increase in voltage may indicate possible insulation deterioration.

Copyright The Institute of Electrical and Electronics Engineers, Inc.
Provided by IHS under license with IEEE
No reproduction or networking permitted without license from IHS
Not for Resale

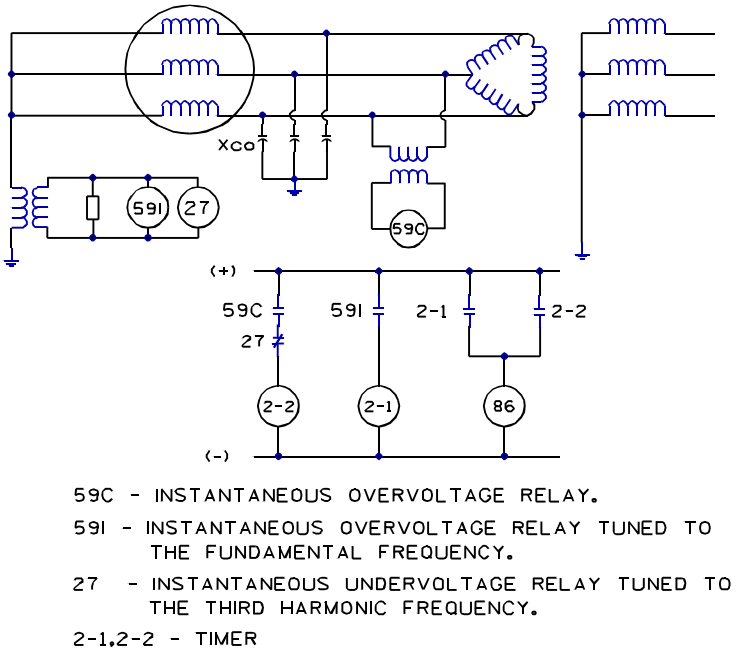

Figure 4.3.3-5—Third harmonic undervoltage scheme for generator ground protection

Several schemes use third harmonic voltage at the neutral or at the generator terminals as a means to detect faults near the stator neutral. These schemes supplement the fundamental frequency zero-sequence voltage relay and are illustrated in figures 4.3.3-5, 4.3.3-6, and 4.3.3-7. Note that these schemes assume that adequate harmonic voltage is present at the neutral of the machine. Typical values needed are approximately 1% of rated voltage.

In figure 4.3.3-5, a third harmonic undervoltage relay is placed across the grounding impedance. The relay operates on the decrease in third harmonic voltage at the neutral which will occur during a stator phase-to-ground fault near the neutral. The 27 relay is supervised by a voltage relay to prevent the relay from operating when excitation is removed from the generator. Other means of supervising the 27 relay are also available.

In figure 4.3.3-6, a voltage relay is connected to measure the third-harmonic voltage at the machine terminals. When a stator phase-to-ground fault occurs at or near the generator neutral, there will be an increase in third-harmonic voltage at the generator terminals, which will cause relay operation.

Copyright The Institute of Electrical and Electronics Engineers, Inc.
Provided by IHS under license with IEEE
No reproduction or networking permitted without license from IHS
Not for Resale

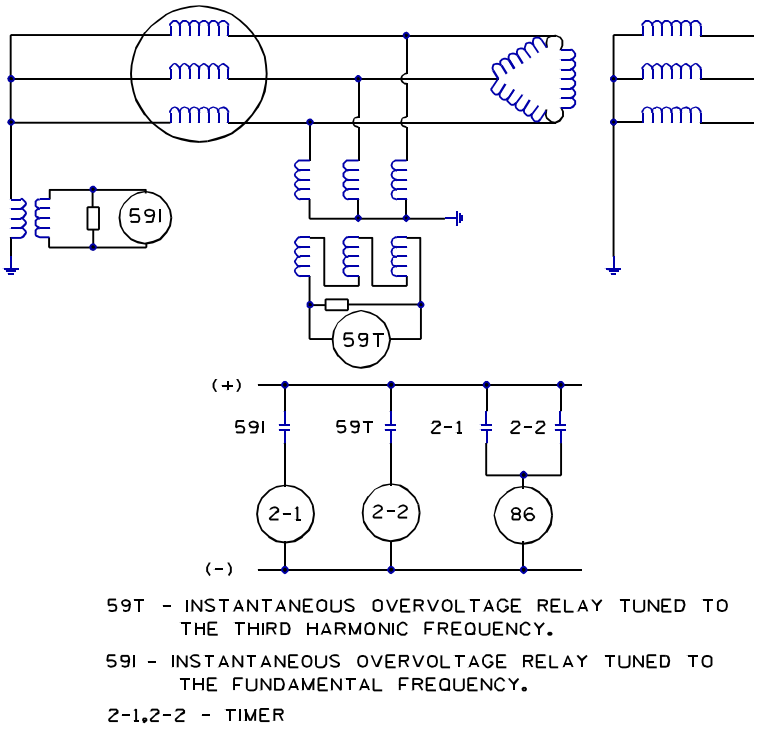

Figure 4.3.3-6—Third harmonic overvoltage scheme for generator ground fault protection

Figure 4.3.3-7 illustrates a third-harmonic voltage differential scheme. This scheme compares the third-harmonic voltage appearing at the neutral to that which appears at the generator terminals. The ratio of these third-harmonic voltages is relatively constant for all load conditions. A stator phase-to-ground fault will disrupt this balance, thus causing operation of the differential relay. This scheme will not operate for a phase-to-ground fault near the generator winding midpoint and requires an additional relay scheme for complete protection.

One additional important advantage of this scheme is that it continuously monitors the grounding transformer primary and secondary connections and voltage transformer at the terminals of the machine. It operates for certain opens or shorts that might prevent the overvoltage relay or other relays from operating. Thus, a problem could be detected before a stator ground occurs.

Copyright The Institute of Electrical and Electronics Engineers, Inc.
Provided by IHS under license with IEEE
No reproduction or networking permitted without license from IHS
Not for Resale

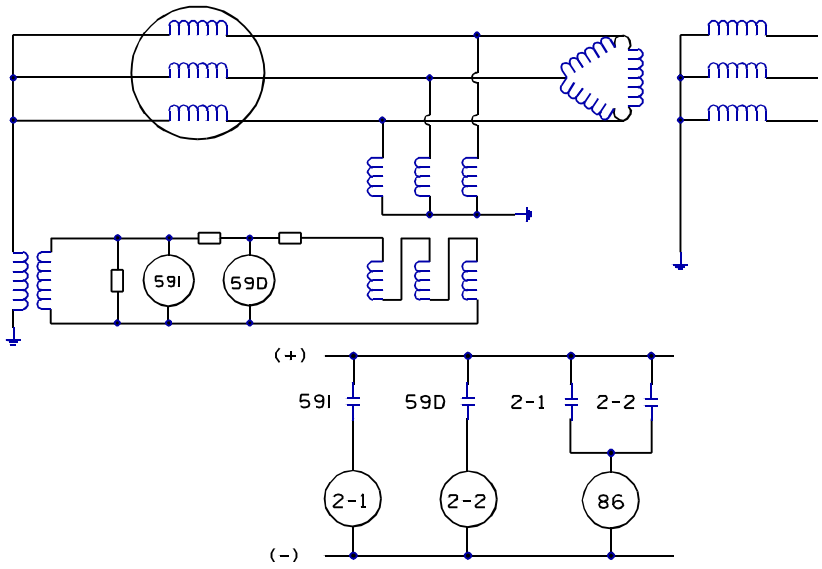

59D - INSTANTANEOUS THIRD HARMONIC VOLTAGE DIFFERENTIAL RELAY

59I - INSTANTANEOUS OVERVOLTAGE RELAY TUNED TO THE FUNDAMENTAL FREQUENCY

2-1,2-2 - TIMER

Figure 4.3.3-7—Third harmonic differential scheme for generator ground fault protection

--``,-`-`,,`,,`,`,,`---

Copyright The Institute of Electrical and Electronics Engineers, Inc.
Provided by IHS under license with IEEE
No reproduction or networking permitted without license from IHS Not for Resale

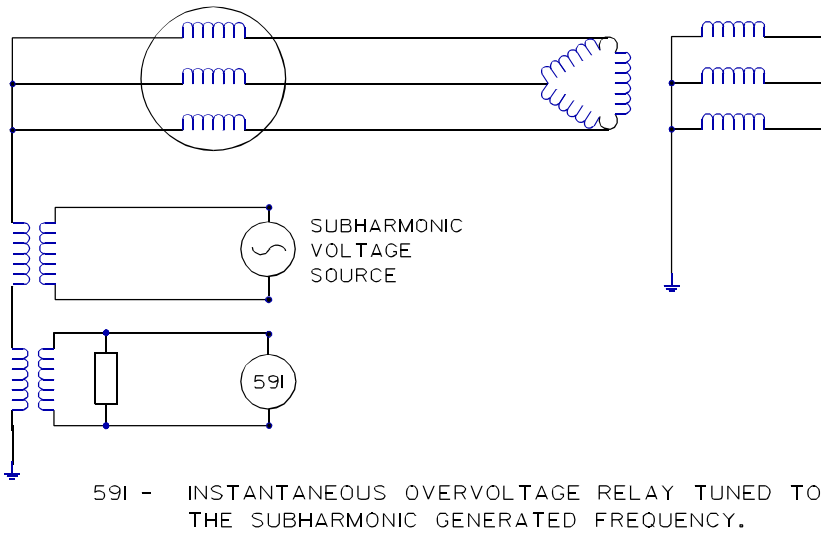

Figure 4.3.3-8—Subharmonic voltage injection scheme for generator ground fault protection

Figure 4.3.3-8 illustrates a scheme wherein a subharmonic voltage signal is injected at the neutral or terminals of the protected generator. The injected signal returns to ground through the stator winding shunt capacitances to ground. When a stator phase-to-ground fault occurs, the shunt capacitances are short circuited and the magnitude of the injected signal increases. This change in signal level is detected by the relay. This scheme provides ground-fault protection with the generator energized or at standstill.

Copyright The Institute of Electrical and Electronics Engineers, Inc.
Provided by IHS under license with IEEE
No reproduction or networking permitted without license from IHS
Not for Resale

4.3.3.1.2 Tripping mode

In general, both the primary and backup protection is connected to trip and shut down the generator, and the prime mover. Separate lockout relays should be used to distinguish phase faults from ground faults and/or primary from backup relay operation.

In some instances where the generator is grounded through a ground fault neutralizer, the user may only alarm with the ground fault protection. The operator is thereby given time to analyze and assess the situation, and tripping may be delayed as long as an hour or two to permit fault isolation. Even though the ground fault current will be very small and may not damage the stator iron, the elevated voltages on the other two phases increases the risk that another ground fault may develop, which will result in a very high phase-to-phase fault current flow.

Where the protection is connected to alarm, it may be necessary to remove potential from the sensitive zero-sequence voltage relay since this relay generally has a limited continuous overvoltage capability. This can be accomplished with an auxiliary relay as shown in figure 4.3.3-9. See IEEE Std C62.92.2-1989 for ratings of the other components.

4.3.3.2 Low-resistance grounding

As indicated in 3.2.2, the grounding resistor is selected to limit the generator's contribution to a single phase-to-ground fault at its terminals to a range of current between 200 A and 150% rated full load current. With this range of available fault current, differential relaying will provide some ground-fault protection (see figure 4.3.3-1). However, since the differential relaying will not provide ground-fault protection for the entire stator phase winding, it is common practice to provide supplementary sensitive protection for ground faults.

This method of grounding is generally used where two or more generators are bused at generator voltage and connected to a system through one step-up transformer as illustrated in figure 3.4.4, or connected directly to a distribution system as illustrated in figure 3.4.5. The protection discussed above will permit selective ground relaying of several generators.

Copyright The Institute of Electrical and Electronics Engineers, Inc.
Provided by IHS under license with IEEE
No reproduction or networking permitted without license from IHS Not for Resale

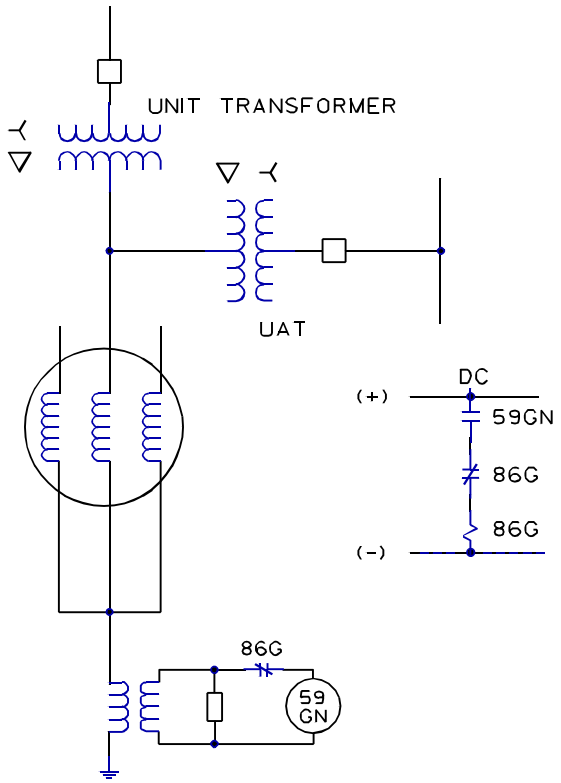

Figure 4.3.3-9—Scheme for removing potential from ground fault overvoltage relay when relay is used to alarm

4.3.3.2.1 Protection

Sensitive ground-fault protection can be provided with either a current-polarized directional relay or with a simple time overcurrent relay connected as shown in figure 4.3.3-10. When a directional overcurrent relay is used, the polarizing coil is energized from a current transformer in the generator neutral while the operating coil is in the neutral of the generator differential relaying scheme. This application provides sensitivity without a high operating coil burden. The 1.1 or 1.2 factor biases the system to assure that there is restraining “torque” for external faults. Using figure 4.3.3-10, “torque” can be in either direction, depending on which ct saturates.

When a simple overcurrent relay is used, a sensitively set time overcurrent relay is connected in the neutral of the differential scheme.

In both approaches, the sensitive ground protection will only detect faults covered by the differential zone, thereby eliminating the need to time-coordinate these relays with other system relaying.

In addition to the above protection, it is common practice to install a sensitive ground time overcurrent relay in the generator neutral. This relay provides backup for generator and external system ground faults.

4.3.3.2.2 Tripping mode

The tripping mode is the same as for high-impedance grounding (see 4.3.3.1.2).

Copyright The Institute of Electrical and Electronics Engineers, Inc.
Provided by IHS under license with IEEE
No reproduction or networking permitted without license from IHS
Not for Resale

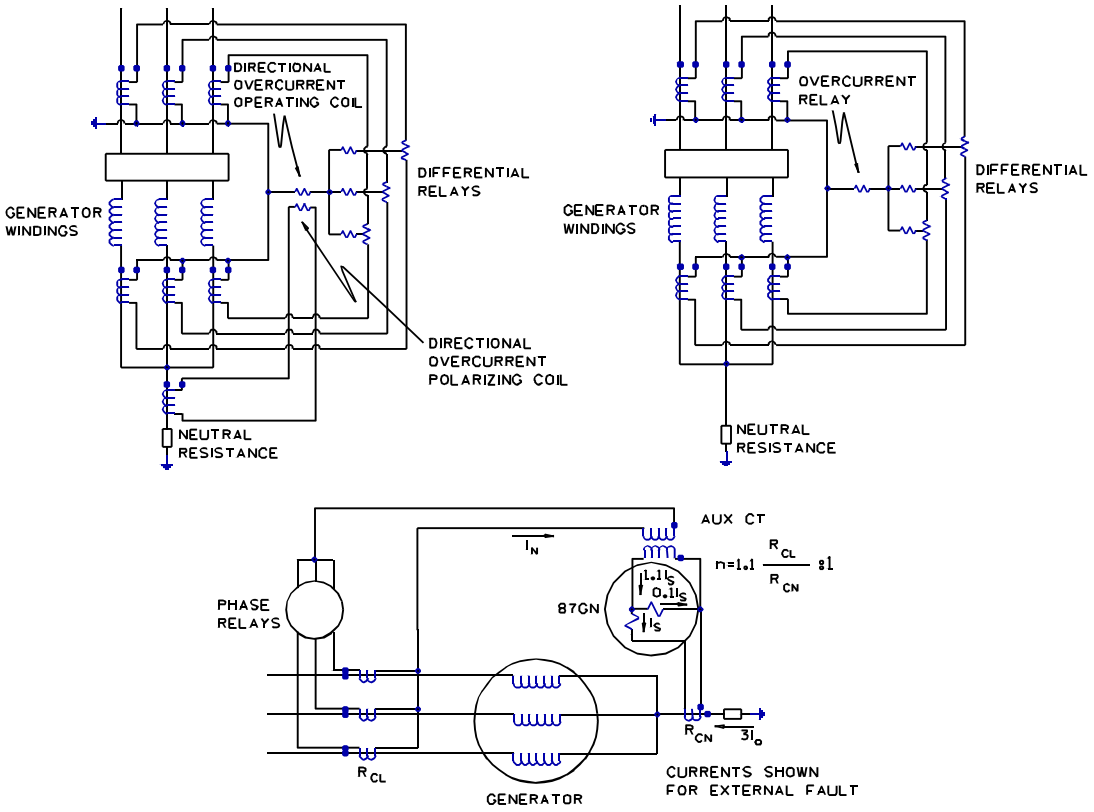

Figure 4.3.3-10—Sensitive ground-fault protection

4.3.3.3 Reactance grounding

Reactance grounding is used where the generator is connected directly to an effectively grounded distribution system. With this method of grounding, the available ground-fault current levels will range from 25–100% of the three-phase fault current. With this high level of fault current, differential relaying will be capable of providing almost complete protection of the stator phase winding for most ground faults. However, differential relaying may not detect high-resistance faults or faults near the generator neutral. Therefore, it is common practice to provide additional sensitive ground protection as backup for generator and system ground faults.

Backup protection is generally provided by a time overcurrent relay connected to a current transformer in the generator neutral. The pickup of this relay must be set above the normal currents that flow in the neutral due to the unbalanced system loads and zero-sequence harmonic currents. Since this overcurrent relay will operate for system ground faults, it must be time coordinated with system ground relaying.

Copyright The Institute of Electrical and Electronics Engineers, Inc.
Provided by IHS under license with IEEE
No reproduction or networking permitted without license from IHS
Not for Resale

More sensitive ground fault protection may be provided with the directional overcurrent relay or with the simple overcurrent relay connected in the neutral of the differential scheme as described in 4.3.3.2.1.

4.3.3.3.1 Tripping modes

The tripping mode is the same as for high-impedance grounding (see 4.3.3.1.2).

4.3.3.4 Grounding transformer grounding

4.3.3.4.1 Protection

As discussed in 3.2.4, grounding may be provided by a zigzag transformer, or a grounded wye-delta transformer or by a grounded wye-broken delta transformer with a resistor connected across a corner of the broken delta.

When a zigzag or grounded wye-delta transformer is used, the effective grounding impedance is selected to provide sufficient current for selective ground relaying. The available ground-fault current is generally on the order of 400 A. These types of grounding transformers are generally used as an alternate grounding source when a generator with neutral reactance grounding is connected directly to a distribution system or as a bus grounding source where several ungrounded-wye or delta-connected generators are bussed at generator voltage. A typical application is illustrated in figure 4.3.3-11. In this arrangement, the generators are ungrounded and the grounding bank is the sole path of ground fault current for faults in the generators or on the feeders.

Primary ground overcurrent relaying is required at each generator and feeder breaker. This protection could be sensitive instantaneous overcurrent relaying. Backup protection can be provided by a time overcurrent relay connected to a current transformer in the neutral of the grounding bank.

The grounded wye-broken delta transformer with a resistance in the corner of the broken delta is generally a high-resistance-grounded system that limits the single-phase-to-ground fault current to a range of 3 to 25 primary A. This approach is generally used to provide a means for detecting ground faults in ungrounded generators prior to synchronizing the generator to the system or as a means for providing backup for high-impedance grounded generators. In the application, the grounding transformer is connected at the terminals of the generator and a zero sequence overvoltage relay of the type described in 4.3.3.1.1. is connected across the resistance in the broken delta. The relay pickup setting and coordination is discussed in 4.3.3.1.1.

Copyright The Institute of Electrical and Electronics Engineers, Inc.
Provided by IHS under license with IEEE
No reproduction or networking permitted without license from IHS
Not for Resale

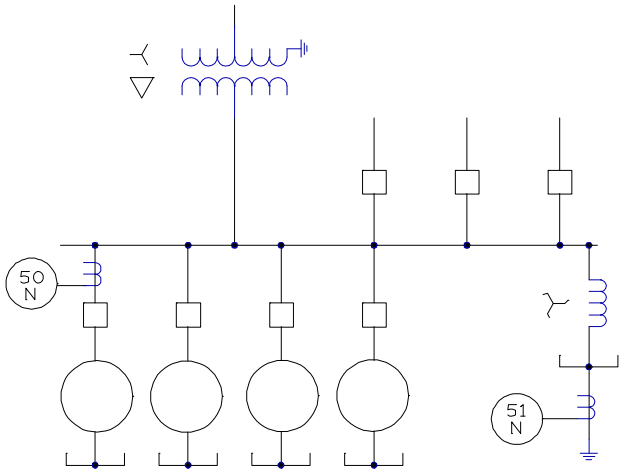

Figure 4.3.3-11—Ground fault protection with a zigzag grounding bank

4.3.3.4.2 Tripping mode

The tripping mode is the same as for high-impedance grounding (see 4.3.3.1.2).

4.4 Generator rotor field protection

This section is primarily concerned with the detection of ground faults in the field circuit. Other protection for the field circuit is covered in 4.5.1.

The field circuit of a generator is an ungrounded system. As such, a single ground fault will not generally affect the operation of a generator. However, if a second ground fault occurs, a portion of the field winding will be short-circuited, thereby producing unbalanced air gap fluxes in the machine. These unbalanced fluxes may cause rotor vibration that can quickly damage the machine; also, unbalanced rotor winding and rotor body temperatures caused by uneven rotor winding currents can cause similar damaging vibrations. The probability of the second ground occurring is greater than the first, since the first ground establishes a ground reference for voltages induced in the field by stator transients, thereby increasing the stress to ground at other points on the field winding.

4.4.1 Protection

There are several methods in common use for detecting rotor field grounds.

Copyright The Institute of Electrical and Electronics Engineers, Inc.
Provided by IHS under license with IEEE
No reproduction or networking permitted without license from IHS
Not for Resale

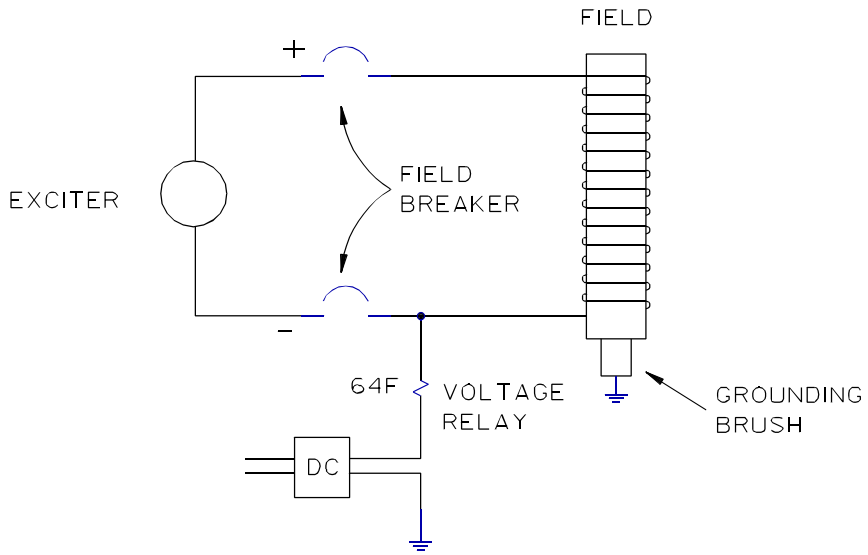

Figure 4.4-1—Field ground detection using a dc source

In the method shown in figure 4.4-1, a dc voltage source in series with an overvoltage relay coil is connected between the negative side of the generator field winding and ground. A ground anywhere in the field will cause the relay to operate. A brush is used to ground the rotor shaft since the bearing oil film may insert enough resistance in the circuitry so that the relay would not operate for a field ground. One to three seconds of time delay is normally used with this relay in order to prevent unnecessary operations for momentary transitory unbalances of the field circuit with respect to ground. These momentary unbalances may be caused by the operation of fast response thyristor type excitation systems.

Copyright The Institute of Electrical and Electronics Engineers, Inc.
Provided by IHS under license with IEEE
No reproduction or networking permitted without license from IHS
Not for Resale

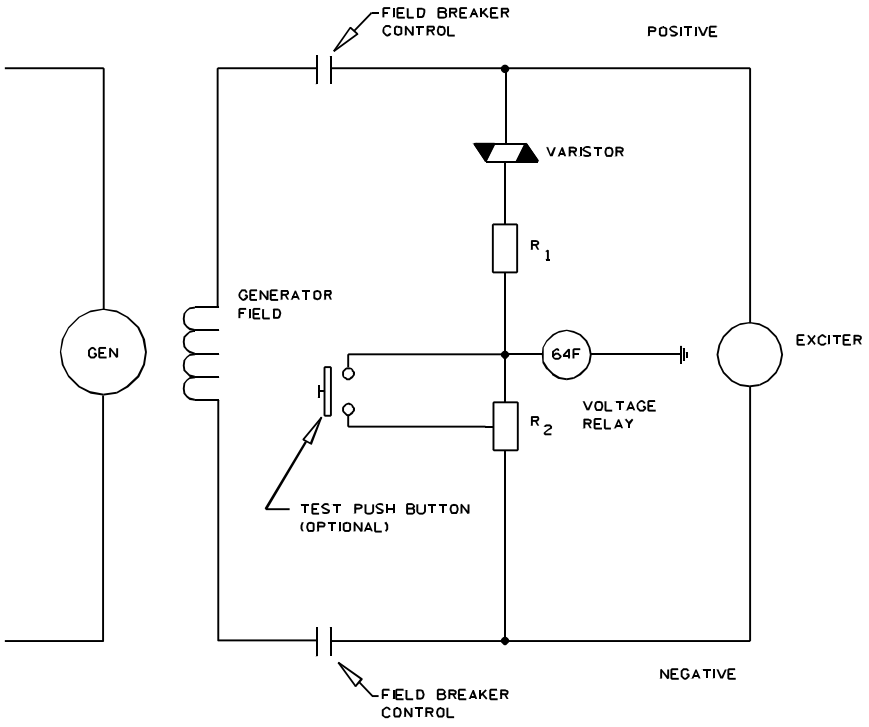

Figure 4.4-2—Field ground detection using a voltage divider

Figure 4.4-2 illustrates a second method used to detect field circuit grounds. It is similar to ground detection schemes used to sense grounds on substation control batteries. This method uses a voltage divider and a sensitive overvoltage relay between the divider midpoint and ground. A maximum voltage is impressed on the relay by a ground on either the positive or negative side of the field circuit. However, there is a null point between positive and negative where a ground fault will not produce a voltage across the relay unless the polarity on the ground detector is reversed. This generator field ground relay is designed to overcome the null problem by using a nonlinear resistor (varistor) in series with one of the two linear resistors in the voltage divider. The resistance of the nonlinear resistance varies with the applied voltage. The divider is proportioned so that the field winding null point is at the winding midpoint when the exciter voltage is at rated voltage. Changes in exciter voltage will move the null point from the field winding center.

Copyright The Institute of Electrical and Electronics Engineers, Inc.
Provided by IHS under license with IEEE
No reproduction or networking permitted without license from IHS
Not for Resale

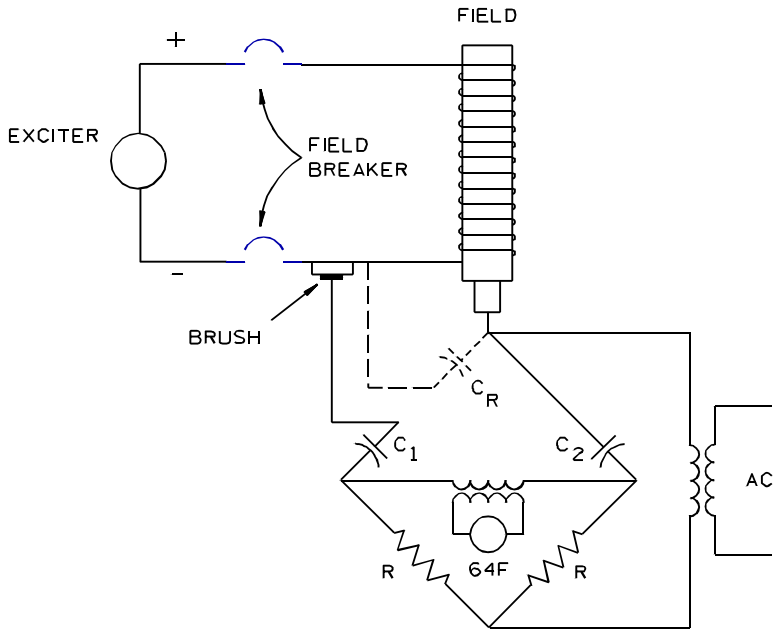

Figure 4.4-3—Field ground detection using pilot brushes

On a brushless excitation system continuous monitoring for field ground is not possible with conventional field ground relays since the generator field connections are contained in the rotating element.

Figure 4.4-3 illustrates the addition of a pilot brush or brushes to gain access to the rotating field parts. Normally this is not done since eliminating the brushes is one of the advantages of a brushless system. However, detection systems can be used to detect field grounds if a collector ring is provided on the rotating shaft along with a pilot brush that can be periodically dropped to monitor the system. The ground check can be done automatically by a sequencing timer and control, or by the operator. The brushes used in this scheme are not suitable for continuous contact with the collector rings. The field circuit impedance to ground is one leg of a Wheatstone bridge connected via the brush. A ground fault shorts out the field winding to rotor capacitance, C_R, which unbalances the bridge circuit. If a voltage is read across the 64F relay, then a ground exists. For brushless machines resistance measurements can be used to evaluate the integrity of the field winding.

Copyright The Institute of Electrical and Electronics Engineers, Inc.
Provided by IHS under license with IEEE
No reproduction or networking permitted without license from IHS
Not for Resale

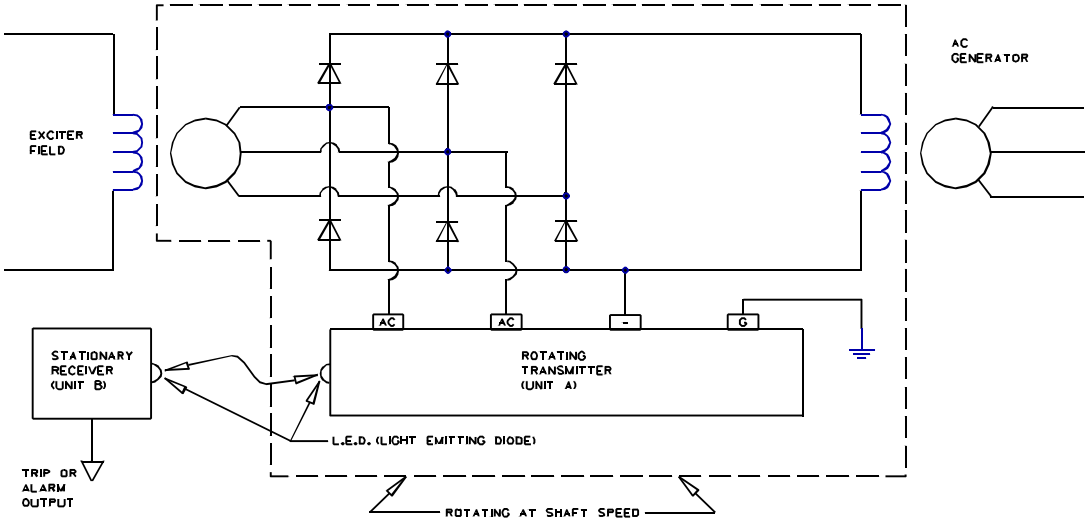

Figure 4.4-4—Field ground detection for brushless machines

Figure 4.4-4 illustrates a method for continuous monitoring of field grounds on brushless machines without using pilot brushes. The relay's transmitter is mounted on the generator field diode wheel. Its source of power is the ac brushless exciter system. Two leads are connected to the diode bridge circuit of the rotating rectifier to provide this power. Ground detection is obtained by connecting one lead of the transmitter to the negative bus of the field rectifier and the ground lead to the rotor shaft. These connections put the field rectifier in series with the voltage of the rectifier in the transmitter. Current is determined by the field ground resistance and the location of a fault with respect to the positive and negative bus. The transmitter detects the resistance change between the field winding and the rotor core. The transmitter Light Emitting Diodes (LEDs) emit light for normal conditions. The receiver is mounted on the exciter housing. The receiver's infrared detectors sense the light signal from the LED across the air gap. Upon detection of a fault, the LEDs are turned off. Loss of LED light to the receiver will actuate the ground relay and initiate a trip or alarm. The relay has a setable time delay of up to 10 s.

Backup protection for the above described schemes usually consists of vibration detecting equipment. Contacts are provided to trip the main and field breakers if vibration is above that associated with normal short circuit transients for faults external to the unit. A brush seating verification scheme is also sometimes used when brushes are retractable. The scheme requires two brushes with a power supply which by relay action will indicate if either brush does not seat and therefore the ground detection is not functioning.

4.4.2 Tripping

From a protection viewpoint, the safest practice is to shut down the generator automatically when the first ground is detected. A second ground fault may be imminent because of insulation problems in the field. There have been instances in which a second ground fault has caused damage to the field. Many utilities alarm with the field ground relay with written instructions for the operator to unload and shut down the machine in an orderly manner so that other machines can pick up the load, thus avoiding a system disturbance.

Copyright The Institute of Electrical and Electronics Engineers, Inc.
Provided by IHS under license with IEEE
No reproduction or networking permitted without license from IHS
Not for Resale

4.5 Generator abnormal operating conditions

This subclause describes those hazards to which a generator may be subjected that may not necessarily involve a fault in the generator. It discusses the typical means for detecting these abnormal operating conditions and the tripping practices.

4.5.1 Loss of field

The source of excitation for a generator can be completely or partially removed through such incidents as accidental tripping of a field breaker, field open circuit, field short circuit (flashover of the slip rings), voltage regulation system failure, or the loss of supply to the excitation system. Whatever the cause, a loss of excitation can present serious operating conditions for both the generator and the system.

4.5.1.1 Steam turbine generators

When a synchronous generator loses excitation, it will overspeed and operate as an induction generator. It will continue to supply some power to the system and it will receive its excitation from the system in the form of VARs. The machine slip and power output will be a function of initial machine loading, machine and system impedances, and governor characteristic. High system impedances tend to produce a high slip and a low power output.

If a generator is operating initially at full load when it loses excitation, it will reach a speed of 2–5% above normal. The level of kVARS drawn from the system can be equal to or greater than the generator kVA rating. If a generator is initially operating at reduced loading (for instance, 30% loading), the machine speed may only be 0.1–0.2% above normal and it will receive a reduced level of vars from the system.

In general, the severest condition for both the generator and the system is when a generator loses excitation while operating at full load. For this condition, the stator currents can be in excess of 2.0 pu and, since the generator has lost synchronism, there can be high levels of current induced in the rotor. These high current levels can cause dangerous overheating of the stator windings and the rotor within a very short time. In addition, since the loss-of-field condition corresponds to operation at very low excitation, overheating of the end portions of the stator core may result. No general statements can be made with regard to the permissible time a generator can operate without field; however, at speeds other than synchronous, it is very short.

With regard to effects on the system, the VAR drain from the system can depress system voltages and thereby affect the performance of generators in the same station, or elsewhere on the system. In addition, the increased reactive flow across the system can cause voltage reduction and/or tripping of transmission lines and thereby adversely affect system stability.

When a lightly loaded machine loses field, the effects will be less damaging to the machine, but the var drain may still be detrimental to the system.

4.5.1.2 Hydrogenerators

Due to saliency, the normal hydrogenerator may carry 20–25% of normal load without field and not lose synchronism. The actual load carrying capability is a function of machine and system characteristics. Also, operation with nearly zero field and at reduced load is often necessary to accept line charging current. However, if a loss of field occurs when a hydrogenerator is carrying full load, it will behave and produce the same effects as a steam turbine generator. High stator and induced field currents may damage the stator winding, the field windings and/or the amortisseur windings and the unit will impose a VAR drain on the system.

Copyright The Institute of Electrical and Electronics Engineers, Inc.
Provided by IHS under license with IEEE
No reproduction or networking permitted without license from IHS
Not for Resale

4.5.1.3 Protection

The most widely applied method for detecting a generator loss of field is the use of distance relays to sense the variation of impedance as viewed from the generator terminals. It has been shown that when a generator loses excitation while operating at various levels of loading, the variation of impedance as viewed at the machine terminals will have the characteristics shown on the *R-X* diagram in figure 4.5.1-1.

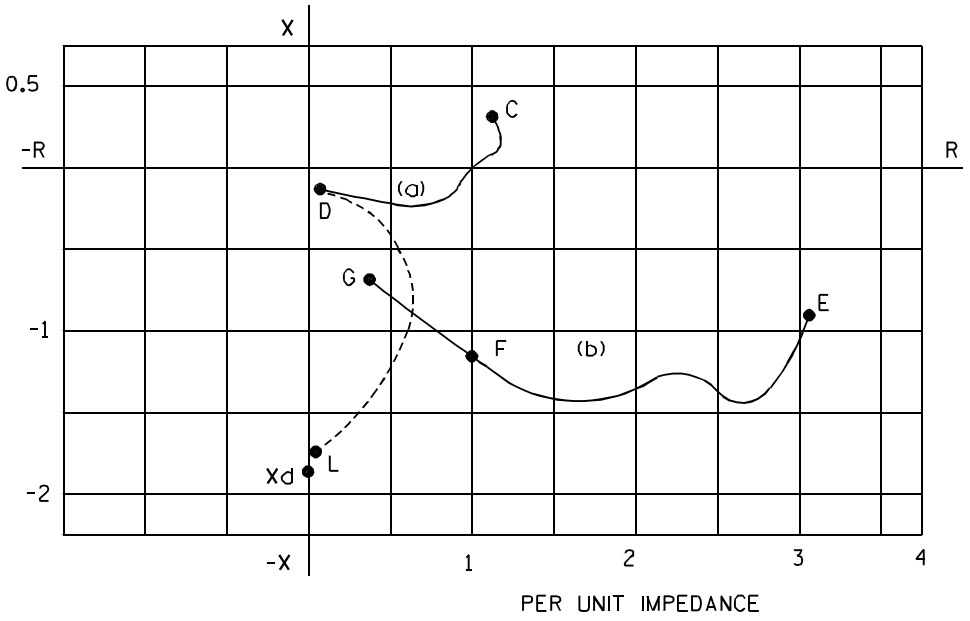

Figure 4.5.1-1—Loss-of-excitation characteristics for a tandem compound generator

In this diagram, curve (a) shows the variation of impedance with the machine operating initially at or near full load. The initial load point is at C and the impedance locus follows the path C-D. The impedance locus will terminate at D to the right of the (-*x*) ordinate and will approach impedance values somewhat higher than the average of the direct and quadrature axis subtransient impedances of the generator. Curve (b) illustrates the case in which a machine is initially operating at 30% load and underexcited. In this case, the impedance locus follows the path E F G and will oscillate in the region between points F and G. For a loss of field at no load, the impedance as viewed from the machine terminals will vary between the direct and quadrature axis synchronous reactances (X_d, X_q). In general, for any machine loading, the impedance viewed from the machine terminals will terminate on or vary about the dashed curve (D-L).

There are two types of distance relaying schemes used for detecting the impedances seen during a loss of field. One approach is shown in figure 4.5.1-2 where one or two offset Mho units are used to protect a machine.

Copyright The Institute of Electrical and Electronics Engineers, Inc.
Provided by IHS under license with IEEE
No reproduction or networking permitted without license from IHS Not for Resale

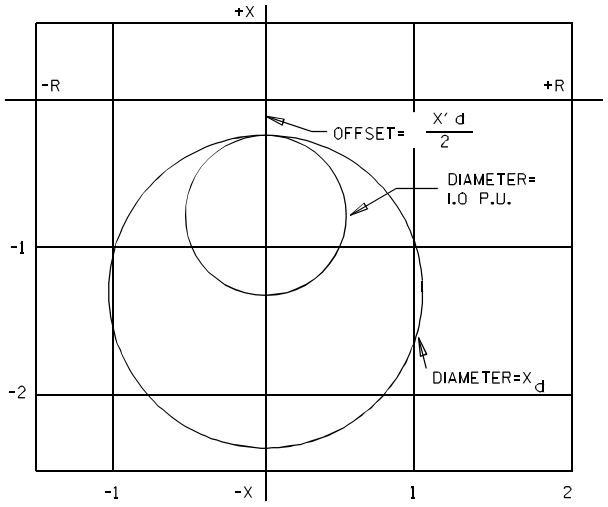

Figure 4.5.1-2—Generator protection using two loss-of-excitation relays

These relays are applied to the generator terminals and set to look into the machine. On small or less important units, only a single relay would be used with the diameter of its circular characteristic set equal to synchronous reactance of the machine (X_d) and with an offset equal to one half transient reactance (X'_d). Time delay of 0.5 to 0.6 s would be used with this unit in order to prevent possible incorrect operations on stable swings.

Depending upon machine and system parameters, two relays are sometimes used as shown in figure 4.5.1-2. The relay with 1.0 pu (generator base) impedance diameter will detect a loss of field from full load down to about 30% load. This relay is generally permitted to trip without any added external time delay and thereby provides fast protection for the more severe conditions in terms of possible machine damage and adverse effects on the system. The second relay would have a diameter setting equal to X_d and would use a time delay of 0.5–0.6 s. Both units would be set with an offset equal to one-half transient reactance.

The second distance relaying approach is illustrated in figure 4.5.1-3. This scheme uses a combination of an impedance unit, a directional unit, and an undervoltage unit applied at the generator terminals and set to look into the machine. The impedance ($Z2$) and directional units are set to coordinate with the generator minimum excitation limiter and its steady state stability limit. During abnormally low excitation conditions, such as might occur following a failure of the minimum excitation limiter, these units operate and sound an alarm, allowing a station operator to correct the condition.

Copyright The Institute of Electrical and Electronics Engineers, Inc.
Provided by IHS under license with IEEE
No reproduction or networking permitted without license from IHS
Not for Resale

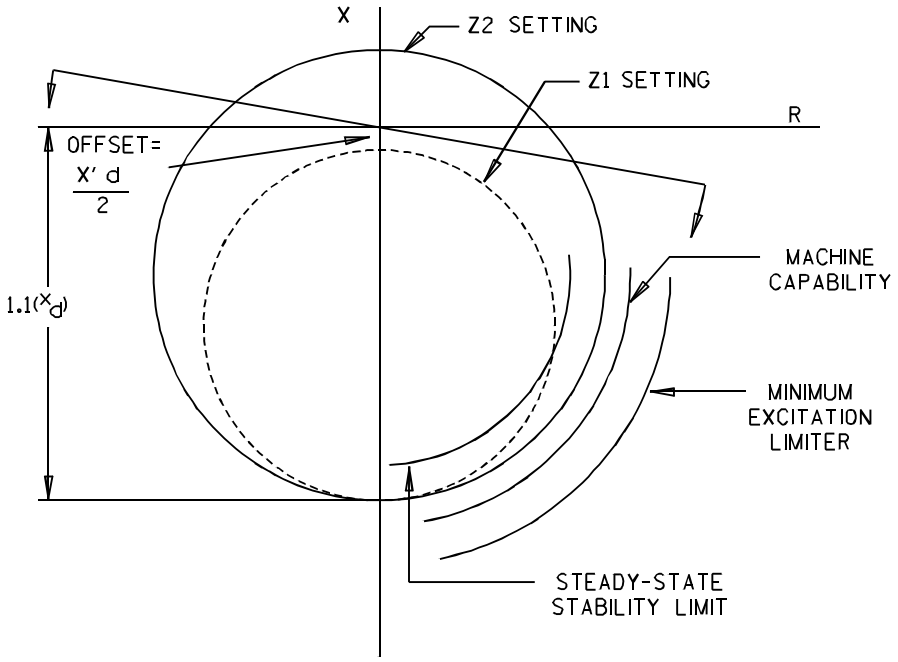

Figure 4.5.1-3—Loss-of-excitation relaying scheme

Should a low voltage condition also exist, indicating a loss-of-field condition, the undervoltage unit would operate and initiate tripping with a time delay of 0.25–1.0 s.

Two relays may also be used in this scheme, with the second (shown as *Z*1 on figure 4.5.1-3) set with an offset equal to $X'_d/2$ and with the long reach intercept equal to 1.1 times X_d. In this case, the relay with the *Z*1 setting should trip without any external time delay, with the other relay delayed by approximately 0.75 s to prevent operation on stable swings.

In both of the above schemes where two relay units are used, one may be considered primary protection and the second as backup. However, there is a widespread practice of using no backup for the loss of field relay. Dependence is placed upon an operator to trip the machine before it is damaged if the primary protection and that inherent in the excitation system fails.

When applying this protection to hydrogenerators, there are other factors that may have to be considered. Since hydrogenerators may be operated on occasion as synchronous condensers, it is possible for the above loss of field relaying schemes to operate unnecessarily when the generator is operated underexcited, that is, taking in vars approaching machine rating. To prevent unnecessary operations, an undervoltage relay can be used to supervise the distance relaying schemes. The dropout level of this undervoltage relay would be set at 90–95% of rated voltage and the relay would be connected to block tripping when it is picked up and to permit tripping when it drops out. This combination will provide protection for almost all loss-of-field conditions but may not trip when the generator is operating at light load, since the voltage reduction may not be sufficient to cause relay drop-out.

A system separation that leaves transmission lines connected to a hydrogenerator may also cause unnecessary operation of the distance relay schemes. For this condition, the hydrogenerator may temporarily reach speeds and frequencies up to 200% of normal. It may not be desirable to trip for this condition. At frequencies above 60 Hz, the angle of maximum torque for some distance relays will shift farther into the fourth quadrant and

Copyright The Institute of Electrical and Electronics Engineers, Inc.
Provided by IHS under license with IEEE
No reproduction or networking permitted without license from IHS Not for Resale

the circle diameter may increase by 200–300%. With this shift and increase in characteristic, it is possible for the relay to operate on the increased line charging current caused by the temporary overspeed and overvoltage condition. Unnecessary operation of the distance relay schemes for this condition can be prevented by supervising the schemes with either an undervoltage relay or an overfrequency relay. The undervoltage relay would be set and connected as discussed in this subclause. The overfrequency relay would be set to pick up at 110% of rated frequency and would be connected to block tripping when it is picked up and to permit tripping when it resets.

When two or more machines are tied together at machine voltage level, including cross-compound units, any undervoltage unit supervising loss-of-field must be set higher or have its contacts shorted, because the voltage regulator and excitation system of the good machine(s) will maintain the voltage.

On small generators, loss of field may be detected by sensing the magnitude of field current, or by a power relay connected to sense var flow into the generator or by sensing power factor angle in excess of some angle, such as 30^{N} underexcited. These devices tend to be less secure than the distance relay approach and therefore are often used just to sound an alarm.

4.5.1.4 Tripping modes

The loss-of-field protection is normally connected to trip the main generator breaker(s) and the field breaker and transfer unit auxiliaries. The field breaker is tripped to minimize damage to the rotor field in case the loss of field is due to a rotor field short circuit or a slip ring flashover. With this approach, if the loss of field were due to some condition that could be easily remedied, a tandem compound generator could be quickly re-synchronized to the system.

This approach may not be applicable with once-through boilers, with cross-compound units, or those units that cannot transfer sufficient auxiliary loads to maintain the boiler and fuel systems. In these cases, the turbine stop valves would also be tripped. Cross-compound units with directly interconnected stator circuits can be resynchronized with the system only if the units are in synchronism with each other. If the units are out of synchronism, normal starting procedures must be used to return the units to the line. However, recent developments in the industry have established that it may be possible to resynchronize some cross-compound generators after an accidental trip without returning the two generators to turning gear speed. This procedure should be established only after very careful consideration with the manufacturer. See IEEE Std 502-1985 for further details on tripping.

4.5.2 Unbalanced currents

There are a number of system conditions that may cause unbalanced three-phase currents in a generator. The most common causes are system asymmetries (untransposed lines), unbalanced loads, unbalanced system faults and open phases. These system conditions produce negative-phase-sequence components of current which induce a double-frequency current in the surface of the rotor, the retaining rings, the slot wedges, and to a smaller degree, in the field winding. These rotor currents may cause high and possibly dangerous temperatures in a very short time.

The ability of a generator to accommodate unbalanced currents is specified by ANSI C50.12-1982 and ANSI C50.13-1989 in terms of negative-sequence current (I_2). This standard specifies the continuous I_2 capability of a generator and the short time capability of a generator, specified in terms I_2^2t, as shown in figure 4.5.2-1.

A generator shall be capable of withstanding, without injury, the effects of a continuous current unbalance corresponding to a negative-sequence current I_2 of the following values, providing the rated kVA is not exceeded and the maximum current does not exceed 105% of rated current in any phase. (Negative-sequence current is expressed as a percentage of rated stator current.)

Copyright The Institute of Electrical and Electronics Engineers, Inc.
Provided by IHS under license with IEEE
No reproduction or networking permitted without license from IHS
Not for Resale

Type of Generator		Permissible I_2 (percent)
Salient Pole		
With connected amortisseur windings		10
With non-connected amortisseur windings		5
Cylindrical Rotor		
Indirectly cooled		10
Directly cooled	— to 960 MVA	8
	961 to 1200 MVA	6
	1201 to 1500 MVA	5

These values also express the negative-sequence current capability at reduced generator kVA capabilities.

Unbalanced fault negative-sequence current capability is expressed in per unit of rated current and time in seconds.

Type of Generator	Permissible I_2^2t
Salient pole generator	40
Synchronous condenser	30
Cylindrical rotor generators	
Indirectly cooled	30
Directly cooled (0–800 MVA)	10
Directly cooled (801–1600 MVA)	see curve below

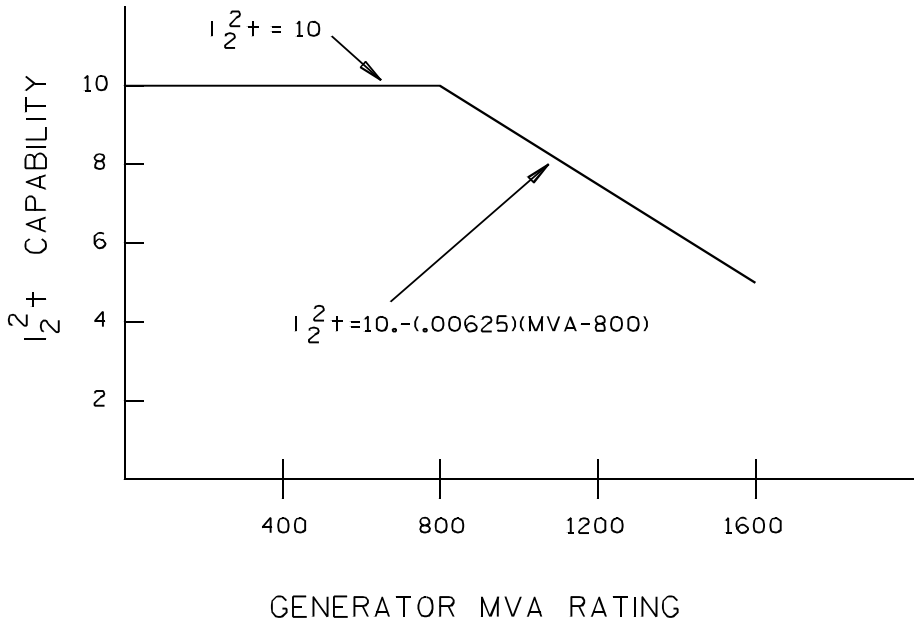

Figure 4.5.2-1—Continuous and short-time unbalanced current capability of generators (values taken from ANSI C50.13-1989)

Copyright The Institute of Electrical and Electronics Engineers, Inc.
Provided by IHS under license with IEEE
No reproduction or networking permitted without license from IHS Not for Resale

4.5.2.1 Protection

It is common practice to provide protection for the generator for external unbalanced conditions that might damage the machine. This protection consists of a time overcurrent relay which is responsive to negative-sequence current as illustrated in figure 4.5.2-2. Two types of relays are available for this protection—an electromechanical time overcurrent relay with an extremely inverse characteristic and a static relay with a time overcurrent characteristic which matches the I_2^2t capability curves for generators.

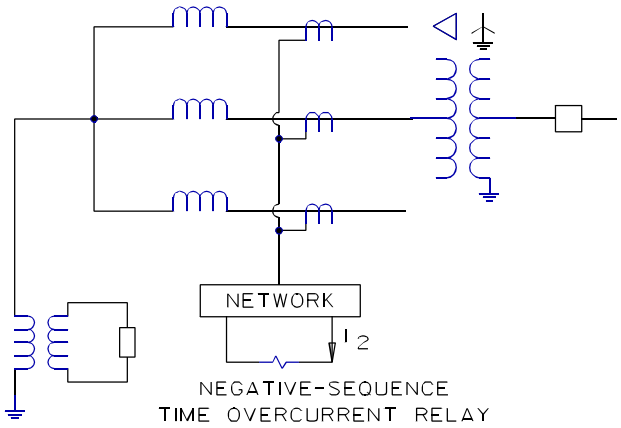

Figure 4.5.2-2—Unbalanced current protection

The electromechanical relay was designed primarily to provide machine protection for uncleared unbalanced system faults. The negative-sequence current pickup of this unit is generally 0.6 pu of rated full-load current and hence may not detect open conductors and/or severe unbalanced load conditions. Typical characteristics for this relay are shown in figure 4.5.2-3a.

Copyright The Institute of Electrical and Electronics Engineers, Inc.
Provided by IHS under license with IEEE
No reproduction or networking permitted without license from IHS
Not for Resale

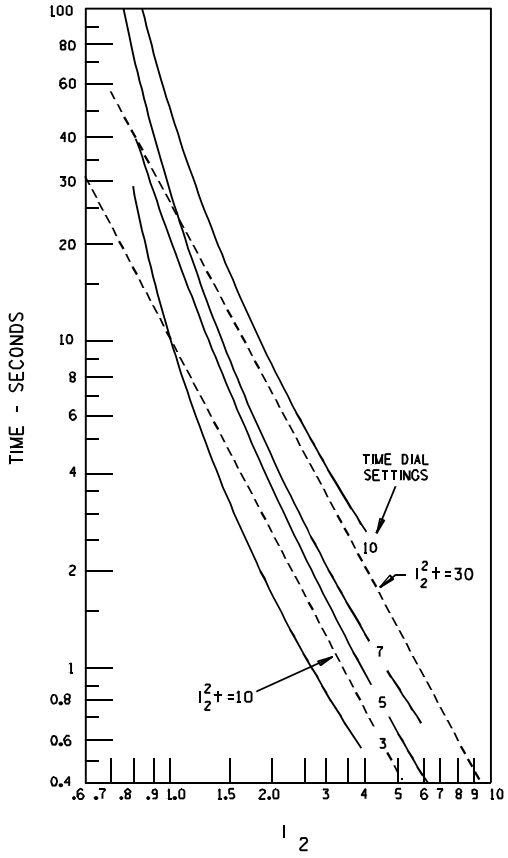

Figure 4.5.2-3a—Typical time-overcurrent curves for an electromechanical negative sequence relay

The static relays are generally more sensitive and are capable of detecting and tripping for negative-sequence currents down to the continuous capability of a generator. Typical characteristics for this type of relay are shown in figure 4.5.2-3b. Its reset characteristic typically approximates the machine cooling following an intermittent current unbalance condition.

Some relays can be provided with sensitive alarm units (I_2 pickup range 0.03–0.20 pu) that can be used to forewarn an operator when machine continuous capability is exceeded. In some types of static relays, a meter can be provided to indicate the I_2 level in a machine.

In general, no separate relaying is applied to back up the negative-sequence time overcurrent relay, since in most applications it is providing a backup function itself. Also, the system backup protection, (phase and ground) discussed in 2.6 and system relaying will provide some degree of backup for unbalanced generator currents.

Copyright The Institute of Electrical and Electronics Engineers, Inc.
Provided by IHS under license with IEEE
No reproduction or networking permitted without license from IHS Not for Resale

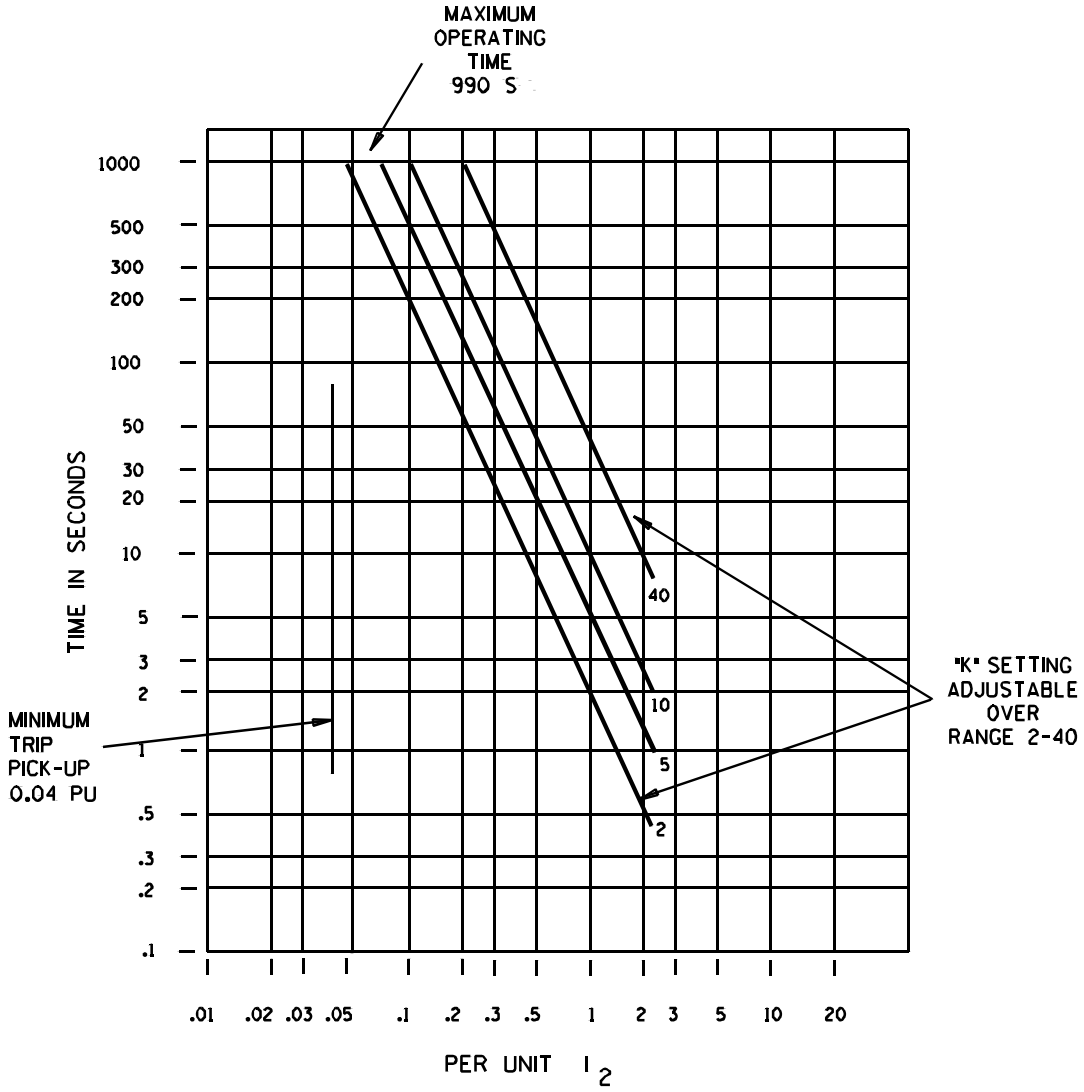

Figure 4.5.2-3b—Characteristics of a static negative-sequence time-overcurrent relay

4.5.2.2 Tripping modes

The negative-sequence relay is connected to trip the main generator breaker(s). This is the preferred tripping if the machine auxiliaries permit operation under this condition because this approach allows quick resynchronization of the unit after the unbalanced conditions have been eliminated. If the machine auxiliaries do not permit operation of the machine with the above tripping, then the negative-sequence relay must also trip the machine prime mover, the field, and transfer the auxiliaries. See the cautionary advice in 4.5.1.4.

4.5.3 Loss of synchronism

As machine sizes have increased, generator per unit reactances have increased and inertia constants have decreased. The culmination of these factors has resulted in reduced critical clearing times required to isolate a system fault near a generating plant before the generator losses synchronism with the power system. In addition to prolonged fault clearing times, generator loss of synchronism can also be caused by low system

Copyright The Institute of Electrical and Electronics Engineers, Inc.
Provided by IHS under license with IEEE
No reproduction or networking permitted without license from IHS
Not for Resale

voltage, low machine excitation, high impedance between the generator and the system, or some line switching operations. When a generator loses synchronism, the resulting high peak currents and off-frequency operation causes winding stresses, pulsating torques, and mechanical resonances that are potentially damaging to the generator and turbine generator shaft. To minimize the possibility of damage, the generator should be tripped without delay, preferably during the first half slip cycle of a loss-of-synchronism condition.

4.5.3.1 Protection

The protection normally applied in the generator zone, such as differential relaying, time delayed system backup relaying, etc., will not detect loss of synchronism. The loss-of-excitation relay may provide some degree of protection but cannot be relied on to detect generator loss of synchronism under all system conditions. Therefore, if during a loss of synchronism the electrical center is located in the region from the high voltage terminals of the generator step-up transformer down into the generator, separate out-of-step relaying should be provided to protect the machine. This is generally required for larger machines that are connected to EHV systems. On large machines the swing travels through either the generator or the main transformer. This protection may also be required even if the electrical center is out in the system and the system relaying is slow or cannot detect a loss of synchronism. Transmission line pilot-wire relaying or phase comparison relaying will not detect a loss of synchronism.

The conventional relaying approach for detecting a loss-of-synchronism condition is to analyze the variation in apparent impedance as viewed at the terminals of system elements. It has been shown that during a loss of synchronism between two system areas or between a generator and a system, the apparent impedance as viewed at a line or generator terminals will vary as a function of the generator and system impedance, the system voltages, and the angular separation between the systems.

For example, figure 4.5.3-1 shows for a generator loss of synchronism the variation of impedance as viewed from the machine terminals for three different system impedances. The point *P* is the initial load impedance. *S* is the short circuit impedance at fault application and *R* is the impedance at the instant of clearing. In all cases, instability was caused by the prolonged clearing of a nearby three-phase fault on the high voltage side of the generator unit transformer. The variation of impedance or impedance loci are approximately circular characteristics that move in a counterclockwise direction. For a system impedance of 0.05 pu, the electrical center is inside the machine: for a Z_{sys} = 0.2 the electrical center is at the machine terminals, while for a Z_{sys} = 0.4 the electrical center is in the unit transformer. This variation in impedance can be readily detected by impedance relaying and in most instances the generator can be separated before the completion of one slip cycle. For specific cases, stability studies can determine the loci of an unstable swing so that the best selection of an out-of-step relay or relay scheme can be made.

Copyright The Institute of Electrical and Electronics Engineers, Inc.
Provided by IHS under license with IEEE
No reproduction or networking permitted without license from IHS Not for Resale

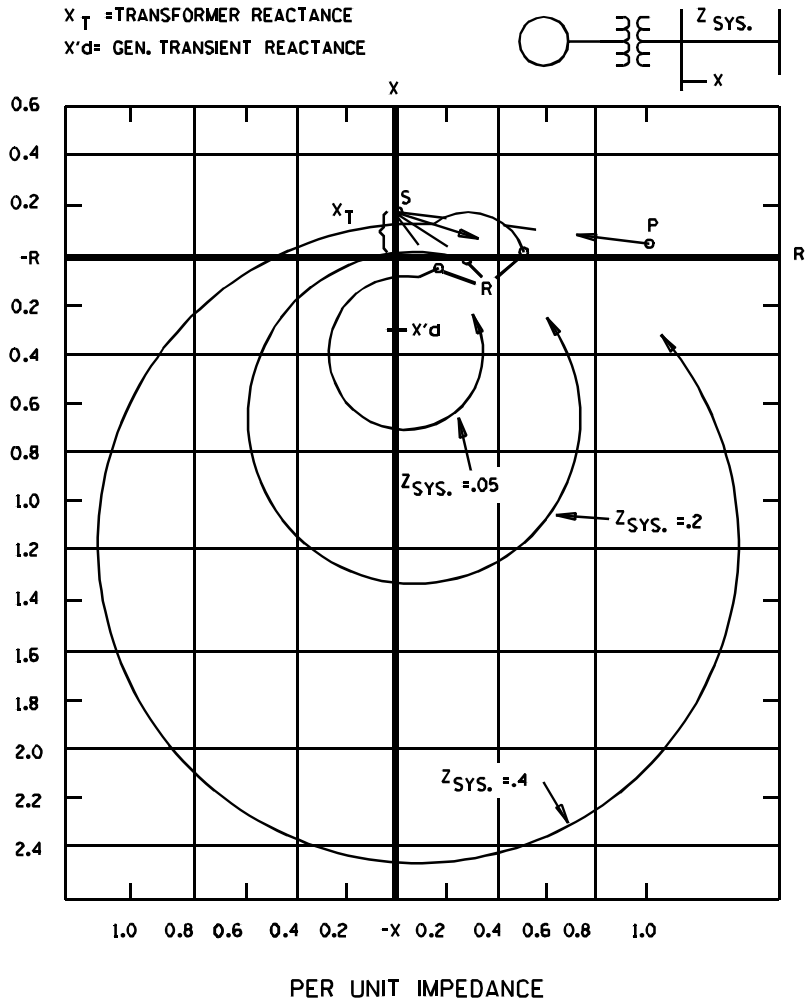

Figure 4.5.3-1—Loss of synchronizing for a tandem compound generator—Voltage regulator out of service

4.5.3.2 Single-blinder scheme

A number of different schemes have been used for detecting generator instability. A basic scheme used for generator loss-of-synchronism protection is the single-blinder scheme. This scheme is illustrated in figure 4.5.3-2 and explained in [B65]. The blinder units are supervised by a Mho unit that is set to permit tripping for impedance swings that appear in the generator or unit transformer and a limited portion of the system but to prevent operation of the scheme on stable swings that pass through both blinders and outside the mho characteristic. The blinders, the mho unit, and associated logic evaluate the progressive change in impedance as it moves from *M* to *P* during a loss of synchronism and initiate tripping when the angle between the generator and system voltages is 90^N or less. Tripping at this angle (90^N or less) may be necessary to minimize duty on the circuit breaker(s).

Copyright The Institute of Electrical and Electronics Engineers, Inc.
Provided by IHS under license with IEEE
No reproduction or networking permitted without license from IHS
Not for Resale

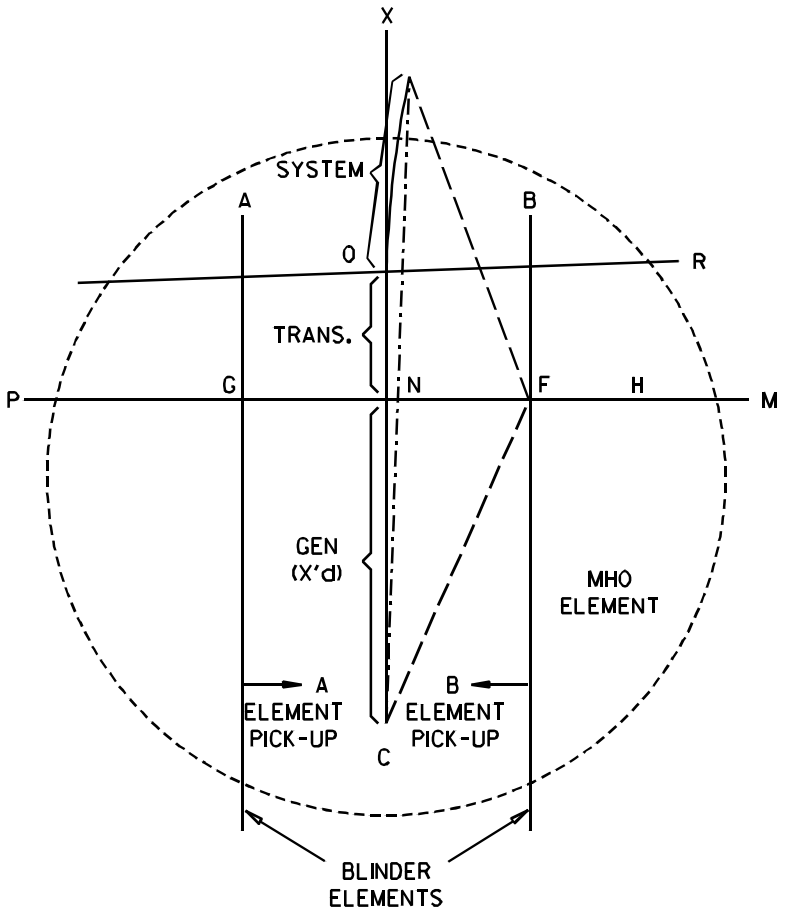

Figure 4.5.3-2—Single blinder scheme

As the impedance changes from *M* to *P* during system swing, regions traversed cause blinder elements to operate and reset. As the swing progresses, element "**A**" operates, then element "**B**" operates. As the swing progresses further toward *P*, element "**A**" resets, and finally "**B**" resets. Timers and associated logic in the relay monitor the pickup and drop out of these elements. If "**A**" and "**B**" remained picked up for a certain time period, and "**A**" subsequently resets, an out-of-step condition is recognized and the relay operates. Such a scheme is used for generator Out-of-Step sensing because logic requires that swing ohms emerge from the side of the relay characteristic opposite to that which it entered. That is, there must be reversal of the power flow as viewed from the machine terminals, and the reversal must occur during a high current. These two conditions will not be satisfied unless the machine is out-of-step with the system.

It should be noted in figure 4.5.3-2 that the generator out-of-step relaying scheme may detect swings that pass through lines leaving the generating station. If the line relays are not blocked by out-of-step detection schemes, they will operate before the generator out-of-step relaying scheme and could separate the generating plant from the system. The scheme illustrated in figure 4.5.3-2 is shown connected at the high-voltage terminals of the unit transformer. This scheme can also be applied at the generator terminals.

4.5.3.3 Double-lens or double-blinder schemes

The double-lens and double-blinder systems perform in a manner similar to the systems previously described. The supervisory Mho element is included in the double-blinder system to obtain the same security features covered in the discussion on the single-blinder scheme. Referring to figures 4.5.3.3-1 and 4.5.3.3-2, the outer

Copyright The Institute of Electrical and Electronics Engineers, Inc.
Provided by IHS under license with IEEE
No reproduction or networking permitted without license from IHS Not for Resale

element operates when the swing impedance enters its characteristics, as at F. Note that in the double-blinder scheme the Mho element will pick-up before the outer blinder element. If the swing remains between the outer and inner element characteristics for longer than a pre-set time, it is recognized as an out-of-step condition in the logic circuitry. When the swing impedance enters the inner element characteristic, a portion of the logic circuitry is sealed in after a short time delay. Then as the swing impedance leaves the inner element characteristic, its traverse time must exceed a pre-set interval before it reaches the outer characteristic. Tripping does not occur until the swing impedance passes out of the outer characteristic, or for the double-blinder scheme, until the reset of the supervisory mho element, depending upon the particular logic being used. The preset traverse time of the swing impedance between the inner and outer elements is provided to prevent the trip logic being set up for sequential clearing of a fault. In the case of a fault, the inner and outer elements reset practically simultaneously and no incorrect tripping results.

The swing angle DFC is controlled by the settings to limit the voltage across the opening poles of the breakers. Once the swing has been detected and the impedance has entered the inner characteristic, the swing can now leave the inner and outer characteristics in either direction and tripping will take place. Therefore, the setting of the inner element must be such that it will respond only to swings from which the system cannot recover.

This restriction does not apply to the single-blinder scheme because the logic requires that the apparent ohms enter the inner area from one direction and exit toward the opposite.

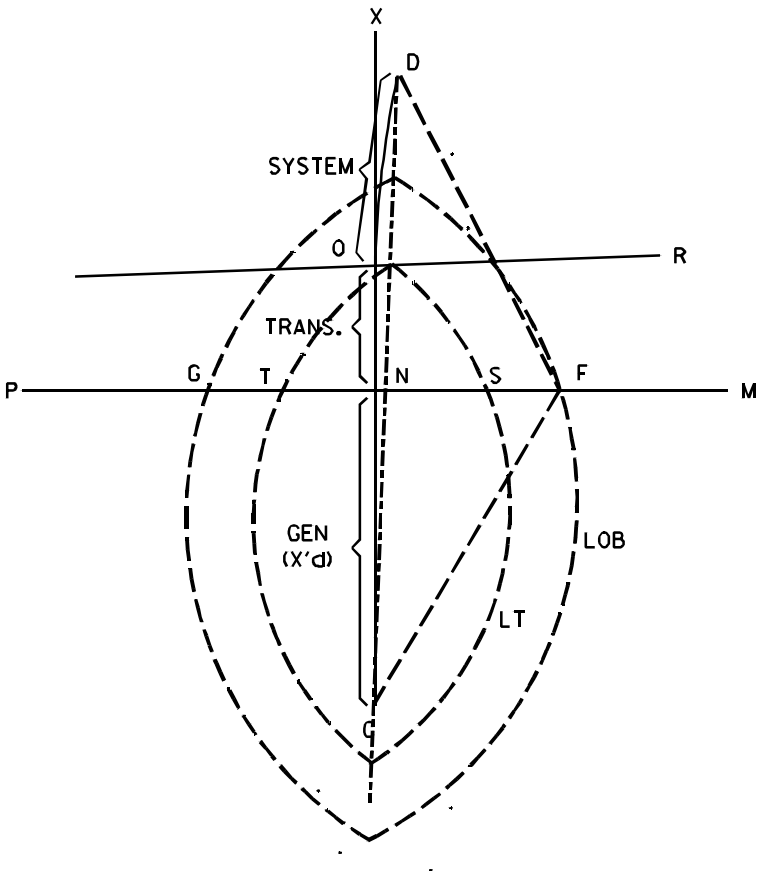

Figure 4.5.3.3-1—Double lens scheme

Copyright The Institute of Electrical and Electronics Engineers, Inc.
Provided by IHS under license with IEEE
No reproduction or networking permitted without license from IHS
Not for Resale

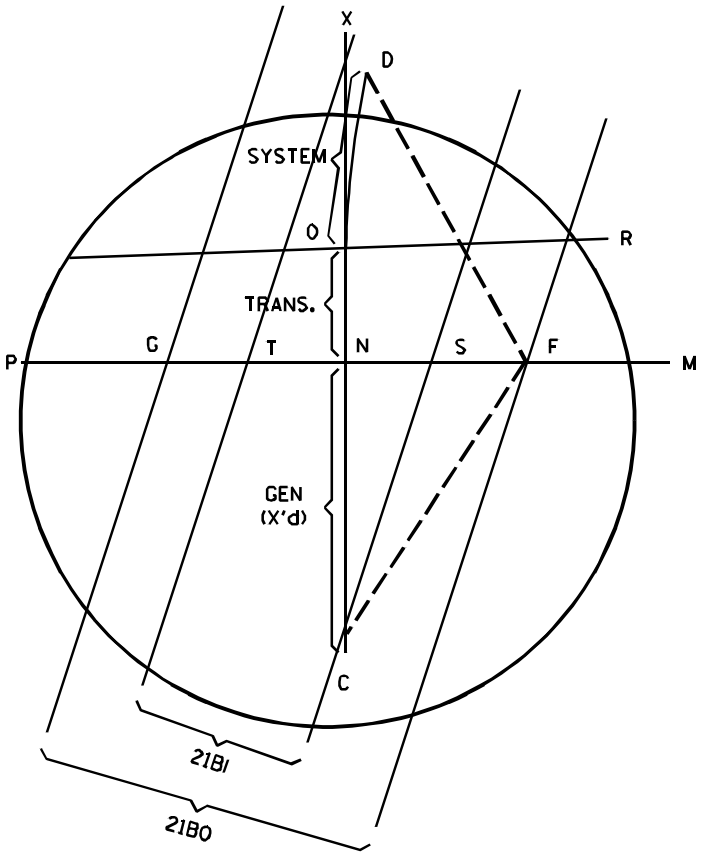

Figure 4.5.3.3-2—Double blinder scheme

The majority of users do not apply specific backup for loss-of-synchronism relaying; however, some rely on the loss-of-field relay to provide a degree of backup and/or a distance relay applied on the high voltage side of the unit transformer looking into the unit transformer and generator with no offset and tripping with no intentional time delay, other than that required to provide security against misoperation on stable swings.

4.5.3.4 Tripping mode

This protection can be connected to trip only the main generator breaker(s) and thereby isolate the generator with its auxiliaries if the unit has full load rejection capabilities. In this way, when system conditions have stabilized, the unit can be readily resynchronized to the system. If the unit does not have full load rejection capability, this protection should be converted to trip and shut down the generator and the prime mover. See the cautionary advice in 4.5.1.4.

4.5.4 Overexcitation

ANSI C50.12-1982, ANSI C50.13-1989, and IEEE Std 67-1990 state that generators shall operate successfully at rated kVA, frequency and power factor at any voltage not more than 5% above or below rated voltage. Deviations in frequency, power factor and voltages outside these limits can cause thermal distress unless the generator is specifically designed for such conditions. Overexcitation is one such deviation for which monitoring and protection schemes can be provided.

Copyright The Institute of Electrical and Electronics Engineers, Inc.
Provided by IHS under license with IEEE
No reproduction or networking permitted without license from IHS Not for Resale

Overexcitation of a generator or any transformers connected to the generator terminals will occur whenever the ratio of the voltage to frequency (volts/ hertz) applied to the terminals of the equipment exceeds 1.05 pu (generator base) for a generator; and 1.05 pu (transformer base) at full load, 0.8 pf or 1.1 pu at no load at the secondary terminals for a transformer. The secondary is defined to be the output terminals of the transformer. When these volts/hertz (V/Hz) ratios are exceeded, saturation of the magnetic core of the generator or connected transformers can occur and stray flux can be induced in nonlaminated components which are not designed to carry flux and can also cause excessive interlaminar voltages between laminations at the ends of the core. The field current in the generator could also be excessive. This can cause severe overheating in the generator or transformer and eventual breakdown in insulation.

One of the primary causes of excessive V/Hz on generators and transformers is operation of the unit under regulator control at reduced frequencies during start-up and shutdown. With the regulator maintaining rated voltage while the unit is at 95% or lower speed, the V/Hz at the terminals of the machine will be 1.05 pu or greater and damage can occur to the generator and/or connected transformers. Generator rotor pre-warming is an example of operating an unloaded machine at reduced terminal voltage and frequency.

Overexcitation can also occur during complete load rejection which leaves transmission lines connected to a generating station. Under this condition, the V/Hz may exceed 1.25 pu. With the excitation control in service, the overexcitation will generally be reduced to safe limits in a few seconds. With the excitation control out of service, the overexcitation may be sustained and damage can occur to the generator and/or transformers.

Failures in the excitation system or loss of signal voltage to the excitation control can also cause overexcitation.

Industry standards do not at present specify definite short-time capabilities for generators and transformers. However, manufacturers will generally provide overexcitation capability limits for this equipment. There are several methods of preventing an overexcitation condition:

4.5.4.1 Volts/hertz limiter in excitation control

The limiter will limit the output of the machine to a set maximum V/Hz no matter what the speed of the unit. This limiter functions only in the automatic control mode. To provide protection when the unit is under manual control, the limiter may have a relay signal output which will activate any additional protective circuits to trip the generator field. The relay circuit is functional whether the excitation control is in or out of service.

With or without a V/Hz limiter in the excitation control, it is common practice to provide separate V/Hz relaying to protect the station transformers and the generator, when the excitation control is out of service.

4.5.4.2 Single or dual fixed time volts/hertz relays

Several forms of protection are available and may be provided with the generating unit. One form uses a single V/Hz relay set at 110% of normal which alarms and trips in 6 s. A second form of fixed time protection uses two relays to better match the generating unit V/Hz capability.

The first relay is set at 118–120% V/Hz and energizes an alarm and a timer set to trip in 2–6 s. The second relay is set at 110% V/Hz and energizes an alarm and a timer set to trip just below the permissible generator and/or transformer operating time at the V/Hz setting of the first relay (for example, 110%). This is typically 45–60 s. Refer to figure 4.5.4-1 for a dual level V/Hz setting example.

Typical V/Hz relays are single phase devices that are connected to the generator voltage transformers. Since a voltage transformer fuse failure can give an incorrect voltage indication, complete and redundant protection can be provided by connecting one set of relays to voltage transformers which supply the voltage regulator

Copyright The Institute of Electrical and Electronics Engineers, Inc.
Provided by IHS under license with IEEE
No reproduction or networking permitted without license from IHS
Not for Resale

and connecting a second set of relays to a different set of voltage transformers such as those used for metering or relaying functions. Strong consideration should be given to applying two V/Hz relays connected to separate vts on large or critical generators.

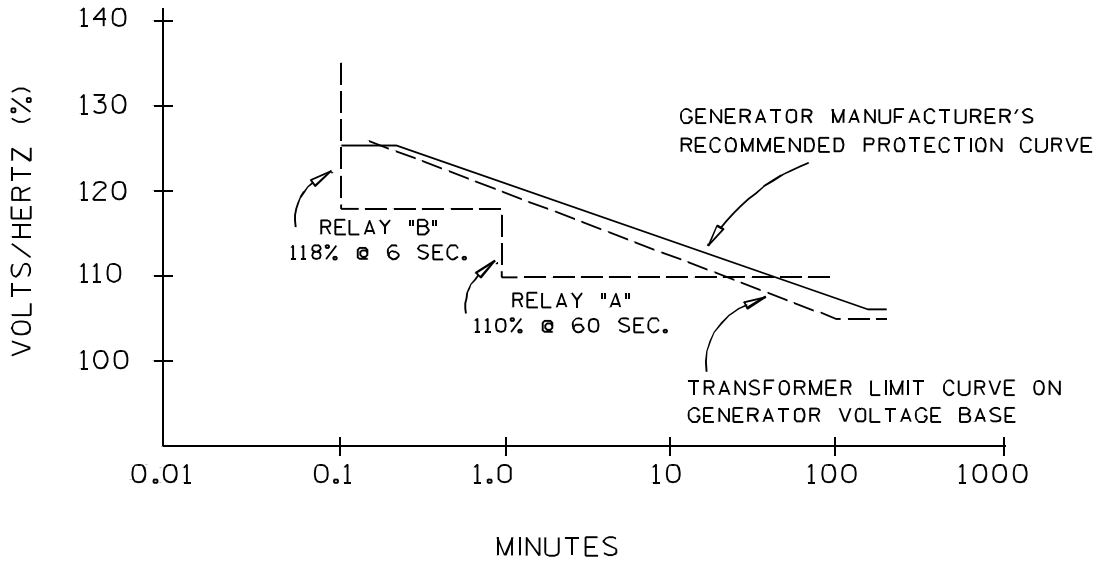

Figure 4.5.4-1—Example of setting for dual fixed-time V/Hz relays

4.5.4.3 Inverse time volts/hertz relay

A V/Hz relay with an inverse characteristic can be applied to protect a generator and/or transformer from an excessive level of V/Hz. A minimum operating level of V/Hz and time delay can usually be set to provide a close match to the combined generator-transformer V/Hz characteristics. The manufacturers' V/Hz limitations should be obtained if possible, and used to determine the combined characteristic.

One version of the V/Hz relay has an inverse time characteristic and a separate definite time delay unit. This unit can be connected to trip or alarm and extend the ability of the relay characteristic to match the V/Hz characteristic of a generator-transformer combination. Refer to figure 4.5.4-2 for a setting example of a V/Hz relay with an inverse characteristic. When the transformer-rated voltage is equal to the generator-rated voltage, the above schemes supplied with the generator can protect both the generator and the transformer. In many cases, however, the rated transformer voltage is lower than the rated generator voltage and may result in a more limiting V/Hz characteristic. Therefore, both the generator and transformer V/Hz characteristics should be determined with protection applied for the most restrictive curve.

Another factor which should be considered during an overexcitation condition is the possible unnecessary operation of the transformer differential relays in a unit generator transformer arrangement. This is undesirable since it would falsely indicate a fault in the transformer. When the unit transformer is delta-connected on the low-voltage side, an overexcitation condition may produce exciting currents that contain a large 60 Hz component with very little odd harmonics. In this instance, the 60 Hz component of exciting current may be above relay pickup and the magnitudes of the harmonics may not be sufficient to provide adequate restraint.

Copyright The Institute of Electrical and Electronics Engineers, Inc.
Provided by IHS under license with IEEE
No reproduction or networking permitted without license from IHS Not for Resale

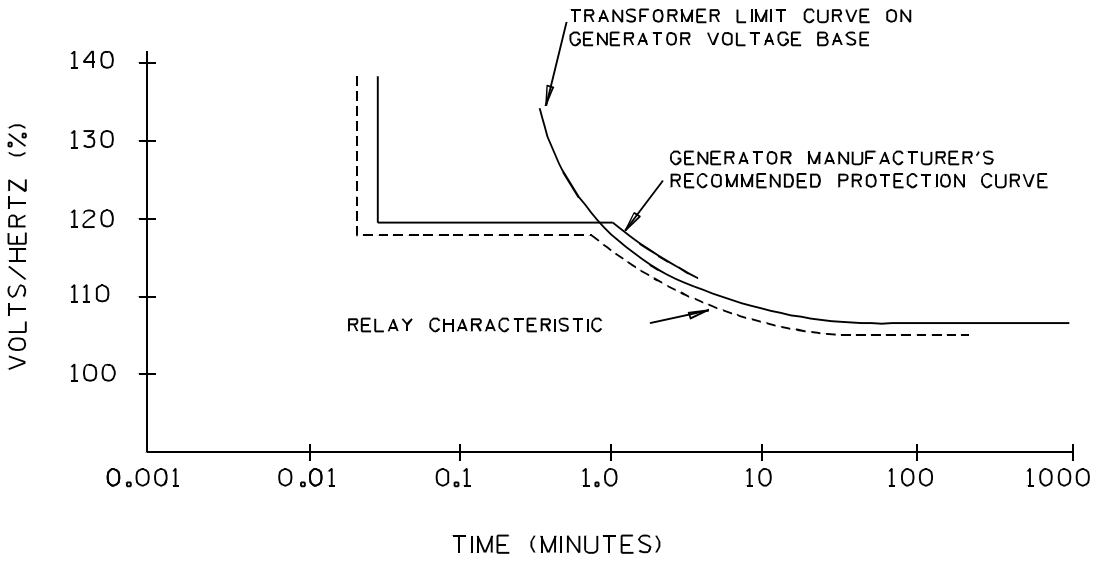

Figure 4.5.4-2—Example of setting for inverse-time V/Hz relay with fixed-time unit

Three approaches have been used to prevent such operations. One approach uses a V/Hz relay to block tripping of or to desensitize the transformer differential relay when the V/Hz exceeds a specified level.

The second approach uses a modified differential scheme which extracts and utilizes a third harmonic exciting current from the transformer delta winding to restrain the relay from operating during an overexcitation condition. It should be recognized that the first two approaches somewhat degrade the differential protection.

The third approach utilizes a differential relay that restrains on the fifth harmonic as well as the second harmonic. The fifth is the lowest harmonic flowing from the delta windings under balanced conditions.

4.5.4.4 Exciter relay

A dc relay (device 53) can be connected across a field shunt to check when the machine field voltage has reached a given value. During start-up, this supplemental off-line protection can help prevent an overexcitation condition if something is wrong with the potential circuits and the volts/hertz relays are unable to function. This relay will be set to operate when field current exceeds its rated full field no-load voltage by a certain value. Operating with a short time delay, this scheme can be set to: alarm, initiate automatic field run back, and/or trip the generator.

4.5.4.5 Tripping

This protection is generally connected to trip the main generator breaker(s) and the field breaker(s) and transfer auxiliaries if necessary. Again, this permits fast resynchronization of the generator if the overexcitation condition can be remedied quickly. When a unit is off-line, alarm and inhibit circuits may be required to prevent an operator from exceeding safe levels of excitation when preparing a unit for synchronizing. See the caution in 4.5.1.4.

--`,,`-`-`,,`,,`,`,,`---
Copyright The Institute of Electrical and Electronics Engineers, Inc.
Provided by IHS under license with IEEE
No reproduction or networking permitted without license from IHS
Not for Resale

4.5.5 Motoring

Motoring of a generator occurs when the energy supply to the prime mover is cut off while the generator is still on line. When this occurs, the generator will act as a synchronous motor and drive the prime mover. While this condition is defined as generator motoring, the primary concern is the protection of the prime mover which can be damaged during a motoring condition.

In sequential tripping schemes for steam turbine generators, a deliberate motoring period is included in the control logic to prevent potential overspeeding of the unit (see also 6.2.2). While some of the devices used in the control logic for sequential tripping schemes are the same as those used in antimotoring protection, the two functions should not be confused. Antimotoring protection should provide backup protection for this control logic, as well as for other possible motoring conditions which would not be detected by the sequential tripping control logic (such as inadvertent closure of governor valves or high system frequency conditions).

4.5.5.1 General considerations

Motoring causes many undesirable conditions. For example, in a steam turbine, the rotation of the turbine rotor and blades in a steam environment causes idling or windage losses. Since windage loss is a function of the diameter of rotor disc and blade length, this loss will usually be greatest in the exhaust end of the turbine. Windage loss is also directly proportional to the density of enclosing steam. Thus, any situation in which the steam density is high will cause dangerous windage losses. For example, if vacuum is lost on the unit, the density of the exhaust steam will increase and cause the windage losses to be many times greater than normal. Also, when high density steam is entrapped between the throttle valve and the interceptor valve in reheat units, the windage losses in the high pressure turbine are very high.

Windage loss energy is dissipated as heat. The steam flow through a turbine has a twofold purpose—to give up energy to cause rotation of the rotor and to carry away the heat of the turbine parts. Since there is no steam flow through the turbine during motoring, the heat of the windage losses is not carried away and the turbine is heated. Even in the situation where the unit has been synchronized but no load has been applied and enough steam is flowing through the unit to supply the losses, the ventilating steam flow may not be sufficient to carry away all of the heat generated by the losses. Although the generator is not motoring under this condition, the problems caused in the turbine will be the same and protection must be provided.

Since the temperature of the turbine parts is controlled by the steam flow, various parts will cool or heat at abnormal, uncontrolled rates during motoring. This can cause severe thermal stresses in the turbine parts. Another problem resulting from this temperature change would be unequal contraction or expansion of the turbine parts. This could cause a rub between rotating and stationary parts. Since a rub will generate heat, the problem is made more severe (as with windage losses) by the lack of ventilation steam flow to carry the heat away.

There is a maximum permissible time that a steam turbine can be operated in a motoring condition and this time is generally a function of the rated speed of the unit. This data can readily be obtained from the manufacturer for a particular steam turbine unit.

Windage loss is not a particular problem in other types of prime movers, but they exhibit additional motoring difficulties. Gas turbines, for example, may have gear problems when being driven from the generator end. With hydro-turbines, motoring can cause cavitation of the blades on low water flow. If hydro units are to operate as synchronous condensers, the unit will be motoring. This should be recognized in any motoring protection. With diesel engine generating units, there is the additional danger of explosion and fire from unburned fuel. Motoring protection must therefore be provided for all generating units except units designed to operate as synchronous condensers, such as hydro units, and can be detected by various means.

Copyright The Institute of Electrical and Electronics Engineers, Inc.
Provided by IHS under license with IEEE
No reproduction or networking permitted without license from IHS Not for Resale

4.5.5.2 General cautions

Since rotational losses are relatively small, destructive overspeeds may occur if the unit is disconnected from the power system unless the prime mover power is shut off. Steam turbines are particularly vulnerable, given the complexity of the turbine steam flow paths. Failure of steam valves to close completely due to warpage or mechanical sticking or backflow from steam extraction lines could provide sufficient steam flow into the turbine to overspeed the unit. For this reason, antimotoring protection by the detection of electrical reverse power flow provides the highest assurance against excessive overspeed. If other devices are used for protection, consideration must be given to potential overspeeding of the unit.

Hydro turbine-driven units, in contrast, are frequently designed to withstand even the most onerous overspeed conditions.

4.5.5.3 Reverse-power relay

From a system standpoint, motoring is defined as the flow of real power into the generator acting as a motor. With current in the field winding, the generator will remain in synchronism with the system and act as a synchronous motor. If the field breaker is opened, the generator will act as an induction motor. A power relay set to look into the machine is therefore used on most units. The sensitivity and setting of the relay is dependent upon the type of prime mover involved, since the power required to motor is a function of the load and losses of the idling prime mover.

In gas turbines, for example, the large compressor load represents a substantial power requirement from the system, up to 50% of the nameplate rating of the unit, so the sensitivity of the reverse-power relay is not critical. A diesel engine with no cylinders firing represents a load of up to 25% of rating, so again there is no particular sensitivity problem.

With hydro-turbines, when the blades are under the tail-race water level, the percent motoring power is high. When the blades are above the tail-race level, however, the reverse-power is low, between 0.2–2.0% of rated and a sensitive reverse-power relay may be required.

Steam turbines operating under full vacuum and zero steam input require about 0.5–3% of rating to motor. This may be detected by a sensitive reverse-power relay.

There may be operating conditions where a reverse-power relay will not be able to detect a condition detrimental to the prime mover. Specifically, accurate measurement of very low power levels at low power factors may not be possible for some reverse-power relays. Reduction in generator reactive power will reduce the requirement for such high precision. This action may be accomplished through control actions in the excitation system or by operator intervention. Additional means of protection or alerting of operators can also be used.

Reverse-power relays are always applied with time delay. Up to 60 s time delay (typically 30 s) can be used to prevent operation during power swings caused by system disturbances or when synchronizing the machine to the system. The time delay selected should coordinate with allowable turbine motoring times.

4.5.5.4 Exhaust hood temperature

Since the prime cause of distress in a motoring steam turbine is the temperature rise due to the windage losses, temperature sensing devices can be used for protection. Since windage loss is generally most severe in the exhaust end of the turbine, a temperature sensing device located in the exhaust hood is often used as auxiliary protection. This device is used to alarm the operator for this motoring condition.

Copyright The Institute of Electrical and Electronics Engineers, Inc.
Provided by IHS under license with IEEE
No reproduction or networking permitted without license from IHS
Not for Resale

This device should not be used as primary protection, since the temperatures measured will vary with the location on the exhaust end of the turbine. Placement of the detector is important. Also, the reliability of existing detectors is questionable. Some other form of protection should therefore be used as primary protection.

4.5.5.5 Turbine steam flow

Steam flow equal to or greater than synchronous-speed no-load steam flow is an indication that the unit is not being motored. The steam flow, even at this very low percentage of rated steam flow, can be determined by measuring the pressure drop across the high-pressure turbine element. Use of a differential pressure switch across this high-pressure element is a method of detecting a motoring condition. It functions independently of the type of control system, whether hydraulic or electrohydraulic. This device is not susceptible to the potential problems associated with lower power factor operation as are reverse-power relays. Although these pressure switches are generally reliable, mechanical malfunctioning of the switch can occur.

4.5.5.6 Protection summary

Primary motoring protection is provided by reverse-power relays for all types of units. The relay is generally connected to trip the main generator breaker(s), the field breaker(s), and provides a trip signal to the prime mover.

On steam turbine generators, differential steam pressure across the high-pressure turbine element can also be used as primary protection. Steam turbine exhaust hood temperature may be used as an alarm.

A manual trip bypass may be necessary to allow operator intervention in the event of the lack of operation of the primary motoring protection.

4.5.6 Overvoltage

Generator overvoltage may occur without necessarily exceeding the V/Hz limits of the machine. In general, this is a problem associated with hydrogenerators, where upon load rejection, the speed may reach 200% of normal, and cause a proportional rise in voltage if the automatic voltage regulator is not is service. Under this condition on a V/Hz basis, the overexcitation may not be excessive but the sustained voltage magnitude may be above permissible limits. In general, this is not a problem with steam and gas turbine generators because of the rapid response of the speed-control system.

4.5.6.1 Protection

Protection for generator overvoltage is provided with a frequency-compensated (or frequency insensitive) overvoltage relay. The relay should have both an instantaneous unit and a time delay unit with an inverse time characteristic. The instantaneous unit is generally set to pick up at 130–150% voltage while the inverse time unit is set to pick up at about 110% of normal voltage.

4.5.6.2 Tripping mode

The protection is generally connected to trip the main generator breaker(s) and the field breaker(s). See the cautionary advice in 4.5.1.4.

4.5.7 Abnormal frequencies

The operation of generators at abnormal frequencies (either overfrequency or underfrequency) generally results from full or partial load rejection or from overloading of the generator.

Copyright The Institute of Electrical and Electronics Engineers, Inc.
Provided by IHS under license with IEEE
No reproduction or networking permitted without license from IHS Not for Resale

Full or partial load rejection may be caused by clearing of system faults or by overshedding of load during a major system disturbance. Load rejection will cause the generator to overspeed and operate at some frequency above normal. The final steady state frequency will be a function of the amount of load rejected and the governor droop characteristic. For example, assuming a 5% governor droop characteristic, a load reduction of 50% of rated would cause a 2½% rise in frequency. In general, the overfrequency condition does not pose serious problems since operator and/or control action can be used to quickly restore generator speed and frequency to normal without the need for tripping the generator.

Overloading of a generator may be caused by a variety of system disturbances and/or operating conditions. However, of primary concern is the system disturbance caused by a major loss of generation which produces system separation and severe overloading on the remaining system generators. Under this condition, the system frequency will decay and the generators may be subjected to prolonged operation at reduced frequency. While load shedding schemes are designed to arrest the frequency decay and to restore frequency to normal during such disturbances, it is possible that undershedding of load may occur. This may cause an extremely slow return of frequency to normal or the bottoming out of system frequency at some level below normal. In either case, there exists the possibility of operation at reduced frequency for sufficient time to damage steam or gas turbine generators. In general, underfrequency operation of a turbine generator is more critical than overfrequency operation since the operator does not have the option of control action. Therefore, it is usually recommended that some form of underfrequency protection be provided for steam and gas turbine generators.

4.5.7.1 Abnormal frequency capabilities of turbine generators

Both the generator and the turbine are limited in the degree of abnormal frequency operation that can be tolerated.

At reduced frequencies, there will be a reduction in the output capability of a generator. The reduction in capability is generally in some proportion to the reduction in frequency. There are no standards that specify generator capability at reduced frequencies but this information is generally available from the generator manufacturer. The reduction in output capability coupled with possible overloading of the generator during a system disturbance may result in thermal damage to the generator if its short-time thermal capability is exceeded. This possibility should be recognized and protection provided as discussed in 4.1 of this guide.

The turbine is usually considered to be more restrictive than the generator at reduced frequencies because of possible mechanical resonances in the many stages of turbine blades. Departure from rated speed will bring stimulus frequencies closer to one or more of the natural frequencies of the various blades and there will be an increase in vibratory stresses. As vibratory stresses increase, damage is accumulated that may lead to cracking of some parts of the blade structure, most likely the tie wires or blade covers. Tie wire and blade cover cracks are not catastrophic failures but they change the vibration behavior of the blade assembly so that it is likely to have natural resonance frequencies closer to rated speed. This may produce blade fatigue during normal running conditions.

Turbine manufacturers provide time limits for abnormal frequency operation. This data is usually provided in the form of permissible operating time in a specified frequency band. There may be anywhere from one to six frequency bands specified for a turbine under load, depending upon the design and the manufacturer. The effects of abnormal frequency operation are cumulative. Hence, if a turbine is operated for 50% of the permissible time in a specified frequency band, this leaves only 50% of the permissible time left in that frequency band for the remainder of the turbine’s life.

These turbine capability limitations generally apply to steam turbine generators. Combustion turbine generators (CTGs) in general have greater capability than steam units for underfrequency operation. However, CTGs are frequently limited by combustion instability and/or sharply reduced turbine output as frequency drops. The specific underfrequency limit should be obtained from the manufacturer for each CTG. In general, there are no restrictions on hydrogenerators.

Copyright The Institute of Electrical and Electronics Engineers, Inc.
Provided by IHS under license with IEEE
No reproduction or networking permitted without license from IHS
Not for Resale

4.5.7.2 Protection

In effect, primary underfrequency protection for steam and gas turbine generators is provided by the implementation of automatic load shedding programs on the power system. These load shedding programs should be designed so that for the maximum possible overload condition, sufficient load is shed to quickly restore system frequency to near normal.

Backup protection for underfrequency conditions should be provided by the use of one or more underfrequency relays and timer on each generator.

IEEE Std C37.106-1987 should be consulted for a more complete discussion of turbine underfrequency protection. The most complete schemes require that an underfrequency relay be used for each specified frequency band and the relay be set to pick up when the frequency enters the band. There is a timer associated with each underfrequency relay and the timer is set so that for any one underfrequency incident only a portion of the total permissible time in that band is used up. Less comprehensive schemes employ one underfrequency relay for several bands.

The multiple underfrequency relay and timer schemes are not used on CTGs. CTG manufacturers generally provide the underfrequency protection and this usually consists of a single step underfrequency trip. The trip level should be obtained from the manufacturer.

The underfrequency relays and timers are usually connected to trip the generator. However, in those cases where the consequences of a loss of machine are catastrophic, a utility may only alarm with the underfrequency protection and accept the possibility of doing some damage to the turbine.

4.6 System backup protection

The protective relaying described in the preceding sections provides protection for all types of faults in the generator zone and for generator abnormal operating conditions. In addition to this protection, it is common practice to provide protective relaying that will detect and operate for system faults external to the generator zone that are not cleared due to some failure of system protective equipment. This protection, generally referred to as system backup, is designed to detect uncleared phase and ground faults on the system.

4.6.1 System phase fault backup

Two types of relays are commonly used for system phase fault backup—a distance type of relay or a voltage-restrained or voltage-controlled time overcurrent relay. The choice of relay in any application is usually a function of the type of relaying used on the transmission system. In order to simplify coordination, the distance backup relay is used where distance relaying is used for transmission line protection, while the overcurrent type of backup relay is used where overcurrent relaying is used for line protection.

4.6.1.1 Application of distance type of backup

One zone of distance relaying with a mho characteristic is commonly used for system phase-fault backup. These relays are usually connected to receive currents from current transformers in the neutral ends of the generator phase windings and potential from the terminals of the generator. If the generator is connected to the system using some means other than a delta-wye step-up transformer (i.e., direct connection, wye-wye transformer, etc.), then standard ct and vt connections made to a standard Mho distance relay will provide accurate measurement of impedances for system faults (neglecting infeed). However, if there is a delta grounded-wye step-up transformer between the generator and the system, special care must be taken in selecting the distance relay and in applying the proper currents and potentials so that these relays see correct impedances for system faults. With some relay designs, the phase angle of the voltages applied to the relay

Copyright The Institute of Electrical and Electronics Engineers, Inc.
Provided by IHS under license with IEEE
No reproduction or networking permitted without license from IHS Not for Resale

have to be shifted so that they are in phase with the system voltages in order for the relay to see system faults correctly. If required, this phase shift is accomplished by using auxiliary voltage transformers connected in delta-wye as shown in figure 4.6-1.

NOTE—This is a phase shifting transformer only. The turns ratio is chosen so that the line-to-line voltages on either side of the auxiliary vts are 1:1.

When a generator is connected directly to a system, the connections to the relay are shown in figure 4.6-2. In both cases, for the connections shown, the relay will not only provide backup for system faults but it will also provide some backup protection for phase faults in the generator and generator zone before and after the generator is synchronized to the system.

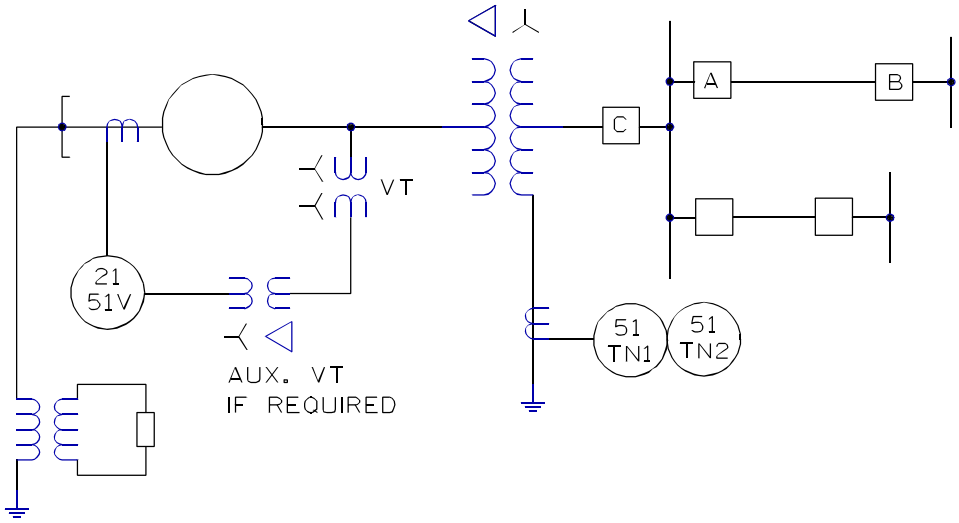

Figure 4.6-1—Application of system back-up relays—Unit generator-transformer arrangement

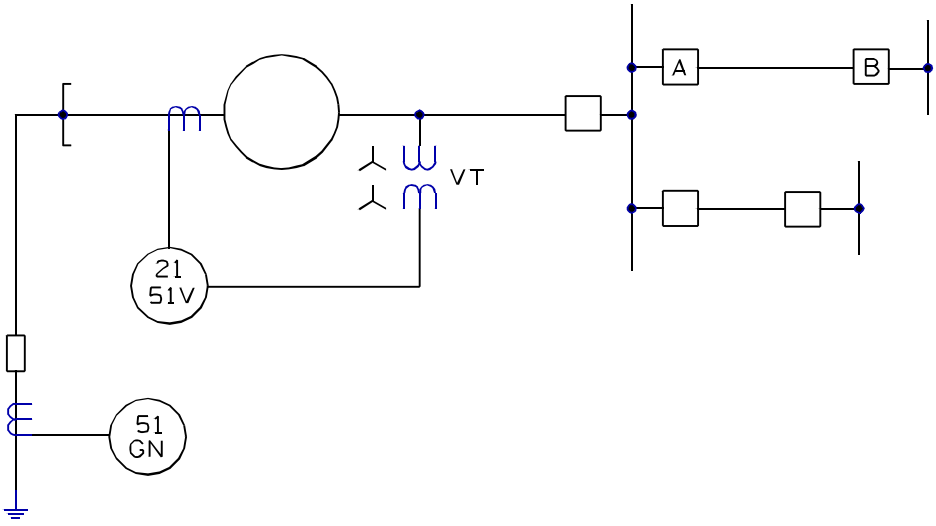

Figure 4.6-2—Application of system back-up relays—Generator connected directly to the system

Copyright The Institute of Electrical and Electronics Engineers, Inc.
Provided by IHS under license with IEEE
No reproduction or networking permitted without license from IHS
Not for Resale

In some cases, the distance relay is connected looking toward the system receiving both current and potential from the terminals of the generator. In this approach an offset mho characteristic is used to provide backup protection for system faults and for some generator and generator zone faults when the generator is connected to the system. However, this connection will not provide backup for the generator or generator zone when the generator is disconnected from the system.

The distance relay applied for this function is intended to isolate the generator from the power system for a fault which is not cleared by the transmission line breakers. In some cases this relay is set with a very long reach. A condition which causes the generator voltage regulator to boost generator excitation for a sustained period may result in the system apparent impedance, as monitored at the generator terminals, to fall within the operating characteristics of the distance relay. The “reach” setting should consider system transient stability studies. Modern excitation control systems include overexcitation limiting and protection devices to protect the generator field, but the time delays before they reduce excitation is several seconds. In distance relay applications for which the voltage regulator action could cause an incorrect trip, consideration should be given to reducing the reach of the relay and/or coordinating the tripping time delay with the time delays of the protective devices in the voltage regulator. Within its operating zone, the tripping time for this relay *must* coordinate with the longest time delay for the phase distance relays on the transmission lines connected to the generating substation bus [B21].

4.6.1.2 Overcurrent type of backup

In general, a simple time overcurrent relay cannot be properly set to provide adequate backup protection. The pickup setting of this type of relay would normally have to be set from 1.5 to 2 times the maximum generator rated full-load current in order to prevent unnecessary tripping of the generator during some emergency overload condition. With this pickup setting and with time delays exceeding 0.5 s, the simple time overcurrent relay may never operate since the generator fault current may have decayed below relay pickup. After 0.5 s or more, generator fault current will be determined by machine synchronous reactance and the current magnitude could be well below generator rated full load current which would be below the relay setting.

The type of overcurrent device generally used for system phase fault backup protection is either a voltage-restrained or voltage-controlled time overcurrent relay. Both types of relays are designed to restrain operation under emergency overload conditions and still provide adequate sensitivity for the detection of faults.

In the voltage-restrained relay, the current pickup varies as a function of the voltage applied to relay. In one type of relay with zero voltage restraint, the current pickup is 25% of the pickup setting with 100% voltage restraint. On units that have a short short-circuit time constant, the 51 V voltage-restrained overcurrent relay should be used.

In the voltage-controlled relay, a sensitive low pickup time overcurrent relay is torque controlled by a voltage relay. At normal and emergency operating voltage levels, the voltage relay is picked up and the relay is restrained from operating. Under fault conditions, the voltage relay will drop out, thereby permitting operation of the sensitive time overcurrent relay. If applied properly, the overcurrent pickup level in both types of relays will be below the generator fault current level as determined by synchronous reactance.

To provide system phase-fault backup, three voltage-restrained or voltage-controlled time overcurrent relays are connected to receive currents and voltages in the same manner as the distance relays illustrated in figures 4.6-1 and 4.6-2. In some small and medium size machine applications, a single 51 V relay is used if a negative sequence overcurrent is included. The two together provide phase backup protection for all types of external faults.

Copyright The Institute of Electrical and Electronics Engineers, Inc.
Provided by IHS under license with IEEE
No reproduction or networking permitted without license from IHS Not for Resale

4.6.2 System ground-fault backup

When a generator is connected in a unit generator-transformer arrangement, it is generally desirable to connect two inverse or very inverse overcurrent ground relays (51TN1 and 51TN2) to a high-accuracy current transformer in the GSU transformer neutral, as shown in figure 4.6-1. When the generator is connected directly to the system, a single ground backup relay (51GN) is connected to a current transformer in the generator neutral, as shown in figure 4.6-2.

4.6.3 Settings

Ideally, the phase and ground-fault backup relays are set to detect and operate for uncleared bus and transmission line faults outside of the generator zone. When the generating station and system configuration are simple as shown in figures 4.6-1 and 4.6-2, it is generally not difficult to obtain reasonable relay settings. Both the phase and ground backup relays would be set to detect and operate for faults at the end of the longest line leaving the station. This would be for a fault at breaker B on line A-B in figure 4.6-1 or 4.6-2.

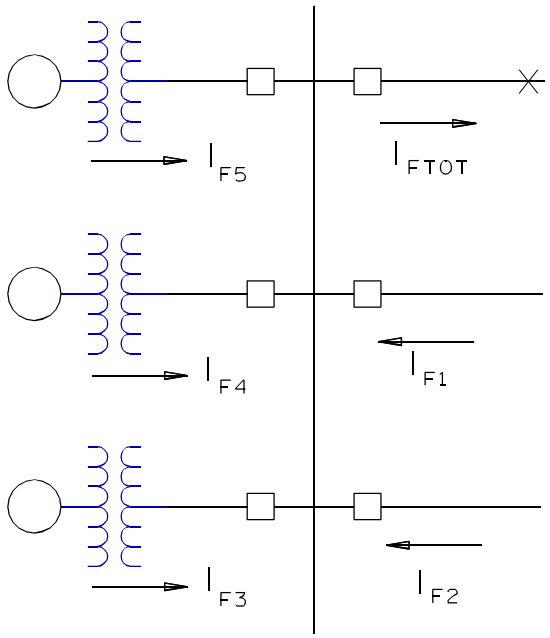

Figure 4.6-3—Complex system configuration

On the other hand, if there are a number of generators and lines connected to the generating station as shown in figure 4.6-3, it becomes difficult to obtain reasonable settings for the phase-fault backup relays. Because of infeed effects, sensitive relay settings may be required to detect faults at the end of the longest line.

With these sensitive settings, the backup relays may operate under some loading conditions or for minor stable swings to unnecessarily trip a generator from the system. With this type of system configuration, it will generally be possible to set these backup relays to detect only close-in faults. Redundant line relaying and breaker failure relaying will have to be provided for line protection.

It should be noted that where voltage transformer type static exciters are used, the generator fault current can decay quite rapidly when there is low voltage at the generator terminals due to a fault. As a consequence, the overcurrent type of phase-fault backup relay with long time delays may not operate for system faults.

Copyright The Institute of Electrical and Electronics Engineers, Inc.
Provided by IHS under license with IEEE
No reproduction or networking permitted without license from IHS
Not for Resale

Therefore, the performance of these relays should be checked with the fault current decrement curve for a particular generator and vt static excitation system.

Both the phase and ground backup relays should be time coordinated with the protection on all system elements outside of the generator zone to assure proper selectivity; however, this may not always be possible.

4.6.4 Tripping modes

Phase Faults. The 21 and/or 51 V phase relays provide a single step of backup protection. When used as primary protection, these relays are connected to energize a hand-reset lockout relay, which simultaneously trips the main generator breaker(s), the generator field and/or exciter breakers, the low-side breakers on the unit auxiliary transformers, and the prime mover. See the caution in 4.5.1.4. The relays can be used for system backup, provided the unit is capable of full load rejection. In this case, the relays are wired to trip only the generator breaker(s).

Ground Faults. Relays 51TN1 and 51TN2 provide two steps of ground-fault backup protection. Relay 51TN1 is coordinated with the highest-set ground relay on the transmission lines connected to the station bus (refer to 4.6.3). This relay is connected to trip the GSU transformer high-side breaker(s) only (Breaker C in figure 4.6-1) and thus disconnect the generator and leave it isolated on its station service—if such operation is permitted—whenever a transmission line fault fails to clear.

If the ground fault is in the GSU transformer itself, operation of relay 51TN1 will not be effective in clearing the fault. This will require relay 51TN2, which is coordinated with 51TN1, to operate and shut down the generator in the same manner as described for the 21 and 51 V relays.

Relay 51GN provides a single step of ground-fault backup protection for the generator in figure 4.6-2. It will generally be connected to trip the same as the unit backup phase relays (21 and/or 51 V).

4.7 Generator breaker failure protection

Functional diagrams of two typical generator zone breaker failure schemes are shown in figures 4.7-1a) and 4.7-1b). Like all such schemes, when the protective relays detect an internal fault or an abnormal operating condition, they will attempt to trip the generator and at the same time initiate the breaker-failure timer.

If a breaker does not clear the fault or abnormal condition in a specified time, the timer will trip the necessary breakers to remove the generator from the system. As shown in figure 4.7-1a), to initiate the breaker-failure timer, a protective relay must operate and a current detector or a breaker “a” switch must indicate that the breaker has failed to open. Figure 4.7-1b) shows a variation of this scheme which times out and then permits the current detector to trip if current continues to flow. The reset time of the current detector need not enter into the setting of the BF timer. The breaker “a” switch must be used since there are faults and/or abnormal operating conditions such as stator or bus ground faults, over excitation (volts/hertz), excessive negative sequence, excessive underfrequency, reverse-power flow, etc, which may not produce sufficient current to operate the current detectors. If each pole of the breaker operates independently, breaker “a” switches from all three poles must be paralleled and connected into the logic circuit.

Copyright The Institute of Electrical and Electronics Engineers, Inc.
Provided by IHS under license with IEEE
No reproduction or networking permitted without license from IHS Not for Resale

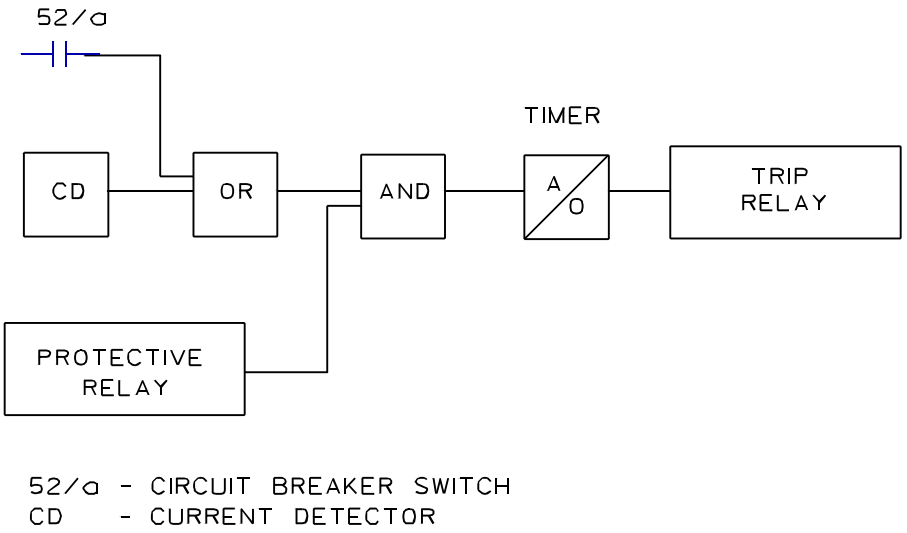

Figure 4.7-1a—Functional diagram of a generator zone breaker failure scheme

While there are a number of methods of initiating the breaker-failure scheme with protective relays, it is generally desirable to separate the generator zone protection into groups and have each group operate a separate lockout or auxiliary relay which would trip the generator and initiate the breaker-failure scheme. In this way, a single lockout or tripping relay failure will not eliminate all protection. It should be noted that all of the protective relays in the generator zone should be connected to the breaker-failure scheme.

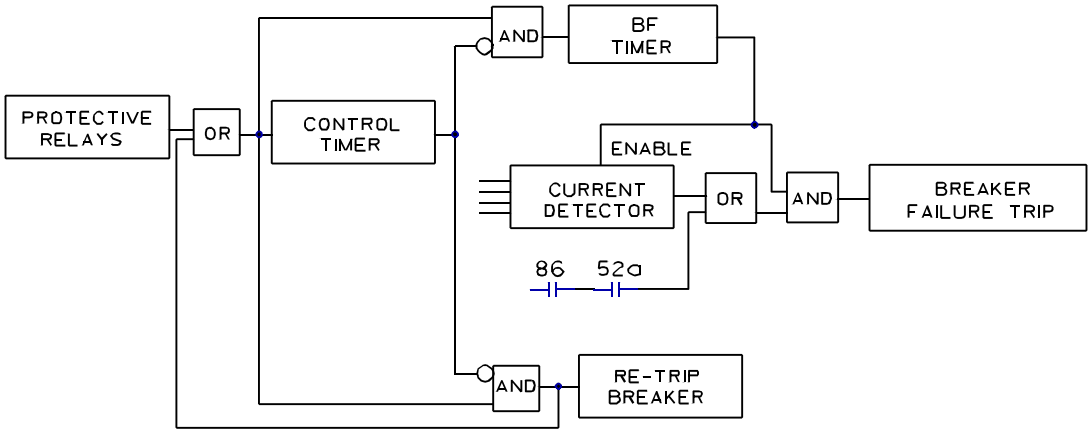

Figure 4.7-1b—Functional diagram of alternate generator breaker failure scheme

Another factor to consider is the operating procedure when a machine is shut down for maintenance. When a ring bus, or a breaker-and-a-half or a double breaker-double bus arrangement is used on the high side, it is common practice for some utilities to isolate the unit generator and close the high-voltage breakers to close

Copyright The Institute of Electrical and Electronics Engineers, Inc.
Provided by IHS under license with IEEE
No reproduction or networking permitted without license from IHS
Not for Resale

the ring or tie the two buses together. Under these conditions, it will be necessary to isolate the lockout and trip relay contacts in order to prevent unnecessary breaker-failure backup operation during generator relay testing. Test switches are sometimes used for this function.

It should be noted that if the generator is connected to the system through two circuit breakers, each breaker should be equipped with a breaker failure relay.

4.7.1 Open generator breaker flashover protection

Another form of breaker failure that can occur and damage the generator is an open breaker flashover; that is, an internal or external flashover across the contacts of one or more breaker poles to energize the generator. This is most likely to occur just prior to synchronizing or just after the generator is removed from service when the voltage across the generator breaker contacts approaches twice normal as the generator slips in frequency with respect to the system. Although circuit breakers are rated to withstand this voltage, the probability of a flashover occurring during this period is increased. Rarely are such flashovers simultaneous three-phase occurrences. Thus, most protection schemes are designed to detect the flashover of one or two breaker poles.

If one or two poles of a breaker flash over, the resulting unbalance current will generally cause the generator negative-sequence relay or possibly ground overcurrent backup relays to operate, which will initiate a tripping of the flashed-over breaker. However, since the breaker is already open, breaker failure relaying must be initiated. Breaker failure relaying as shown in figure 4.7-1a) will be initiated if current detectors (CD) are set with sufficient sensitivity to detect this situation.

An approach used to speed up the detection of a high voltage unit breaker flashover is to modify the breaker-failure scheme as shown in figure 4.7-2. An instantaneous overcurrent relay (50N) is connected to the neutral of the generator step-up transformer. The relay's output is supervised by the generator breaker “b” contact and provides an additional start to the breaker-failure scheme. When the generator breaker is open and one or two poles of the breaker flash over, the resulting transformer neutral current is detected by the 50N relay without the delay that would be associated with negative-sequence or neutral backup relays. Again, current detectors associated with the generator breaker failure must be set with sufficient sensitivity to detect this flashover condition. Generator breaker flashover can also be detected by breaker pole disagreement relaying. This relay monitors the three-phase currents flowing through the breaker and senses whether any phase is below a certain low threshold level (indicating an open breaker pole) at the same time that any other phase is above a substantially higher threshold level (indicating a closed or flashed-over pole). For breaker-and-a-half or ring-bus application, $3E_0$ voltage across the breaker is used to supervise the relay tripping to prevent false operation due to unbalance currents caused by dissimilarities in phase bus impedances.

Copyright The Institute of Electrical and Electronics Engineers, Inc.
Provided by IHS under license with IEEE
No reproduction or networking permitted without license from IHS Not for Resale

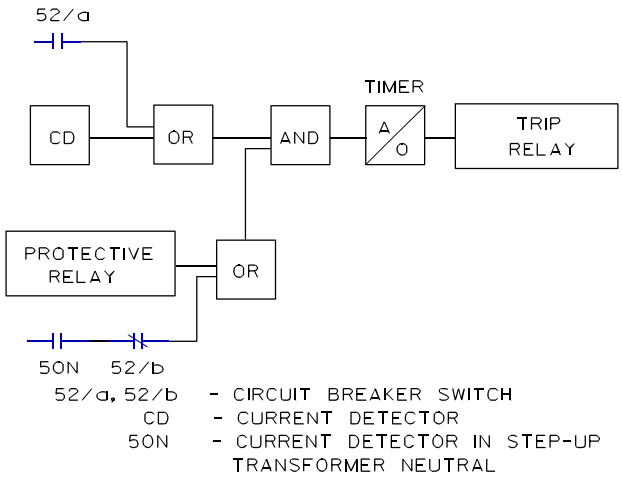

Figure 4.7-2—Modified breaker failure scheme for open breaker flashover detection

4.7.2 Tripping modes

Breaker-failure schemes are connected to energize a hand-reset lockout relay which will trip the necessary backup breakers.

4.8 Excitation system protection

The excitation system has many similarities to the generator it supplies, and hence requires much of the same kinds of protection. Although the consequences from equipment damage are less serious, more or less in proportion to its rating, adequate protection of the excitation system is important for reasons of continuity of service.

4.8.1 General

There are a number of excitation system types in use and/or currently being produced. Although numerous, very few dc (commutator) exciters are now produced, so these are not considered here.

Present-day exciters fall into two broad categories: those using ac generators (alternators) as a power source, and those using transformers. This difference has some effect on protection requirements, and this will be noted where it occurs. Both types use rectifiers, usually either silicon diode or thyristor, or both, which may be either air- or water-cooled.

Because the protection requirements are so closely related to the design of the excitation system and often require more specialized hardware than standard relays, the protection equipment should be, and normally is, included as part of the excitation system.

4.8.2 Exciter phase unbalance

A phase-to-phase, internal turn-to-turn fault, or an open winding can each produce an unbalance in the normally balanced three-phase excitation power source. Detection can be by a detector, which compares the

Copyright The Institute of Electrical and Electronics Engineers, Inc.
Provided by IHS under license with IEEE
No reproduction or networking permitted without license from IHS
Not for Resale

three-phase voltages with their average, or by differential relays as used for generator stator phase faults. The latter are not useful for detecting shorted turns.

In some excitation systems, the alternator/transformer voltage varies with excitation requirements. In these cases, the phase unbalance detector should operate over a very wide voltage range, such as 10:1.

Since phase unbalance can be symptomatic of a serious problem, the unit should be tripped as quickly as possible. Tripping of turbine generator line breaker(s) and excitation is recommended.

4.8.3 Exciter ground fault

A phase-to-ground fault may occur on an alternator/transformer winding or in the rectifier connected to it. As is the case with the generator field, one ground alone will cause no harm, but a second ground could cause heavy current flow and consequent damage.

Since the rectifier is normally connected to the generator field, and the latter must have a ground relay, most grounds in the rectifier will be detected by the same relay. Thus, no separate ground detector is required.

When an alternator is used as an excitation power source, it has a field that is subject to ground faults. While the consequences from a fault are less serious than with the generator field, it is, nevertheless, recommended that the alternator field be provided with a ground detector. This may be connected to provide only an alarm.

4.8.4 Overcurrent

As with exciter ground faults, overcurrent protection for the exciter alternator/transformer/ rectifier cannot be separated from that required for the generator field.

While cylindrical-rotor generator field current capability is defined by ANSI C50.13-1989 in terms of field voltage versus time, the excitation system current capability depends on the design of the equipment, and in general will be greater than that of the field.

Because of the shape of the ANSI curve, some kind of inverse current versus time protection is indicated. Where the alternator/transformer/rectifier capability is less than that of the generator field, the protection characteristics must be modified to reflect this.

Another factor that must be incorporated into the design of the protection system is the need for field forcing following faults to aid in maintaining transient stability. This dictates that very high induced field currents must be permitted to flow for short periods without causing the voltage regulator to reduce the field voltage because of the high current.

The overcurrent protection should be designed to correct the problem, if possible, and keep the unit on line. If the problem is one that does not yield to preprogrammed control actions in a fixed, short time, then a unit trip signal should be produced.

4.8.5 Loss of rectifier cooling

The semiconductor rectifiers used in most excitation systems are dependent upon forced cooling, either air or water. Because of the short thermal time constant involved, it is imperative that load (that is, field) current be reduced or removed in a matter of several seconds if cooling medium flow is lost or greatly reduced.

The method and details of loss-of-flow detection will be dependent, in part, upon the design of the rectifier and its cooling system. In addition to the loss-of-flow signal, it is advisable to provide an over-temperature alarm.

Copyright The Institute of Electrical and Electronics Engineers, Inc.
Provided by IHS under license with IEEE
No reproduction or networking permitted without license from IHS Not for Resale

4.8.6 Alternator armature winding over-temperature

The alternator, in excitation systems which use one, is somewhat like the main generator on a small scale. As such, it is subject to many of the same faults and requires similar protection. Overheating of the stator winding is one example of this. The stator winding could overheat due to partial failure of the stator cooling system, for example.

Stator winding temperature can be monitored by imbedded TCs or RTDs. Since such a problem is likely to arise relatively slowly, an alarm is considered adequate for protection.

4.8.7 Alternator air cooler loss of water flow

One possible cause of stator winding over-temperature is loss of air cooler water flow. While the alternator may be sufficiently protected by the stator winding over-temperature alarm, loss of water flow to the air coolers provides a backup and early warning. This is considered to be an optional protection.

4.8.8 Bearing vibration

Alternator bearings, in systems which have separate alternators, should be treated in the same manner as other bearings in the turbine-generator. That is, they should be provided with vibration detectors and recorders.

Specific tripping recommendations should be made by the alternator manufacturer. In general, for lower levels of vibration, the recommendations will be to correct when convenient or at first opportunity, with the urgency increasing with vibration level.

4.9 Power transformer protection through mechanical fault detection

Protection through mechanical fault detection for the unit transformer and unit auxiliary transformer is provided through gas detection devices and fault pressure relays. For further details, see [B18].

4.9.1 Gas detection

Combustible gases, generated as the oil and insulation breaks down due to localized heating, are detected to indicate incipient faults. A relay can detect gas accumulations above a predetermined level by using a gas accumulator device connected between the main and conservator tanks or a gauge and float chamber connected by tubing to the high point of the transformer cover. This relay action would activate an alarm. A rapid accumulation due to a severe fault is detected by another part of this device and can be used to remove the transformer from service.

4.9.2 Fault pressure

Sensitive protection for a transformer can be provided using a sudden pressure relay based on mechanical principles. Detection methods use the pressure waves that are created during fault conditions inside the insulating oil of the transformer. An internal fault in the transformer will cause a sudden movement of oil within the transformer which in turn causes a pressure wave. This pressure wave will initiate operation of the fault pressure relay. On the other hand, small oil pressure rises due to changes in loading or ambient are gradual changes and are relieved by the device. Relay sensitivity and response to a fault is independent of transformer operating pressure.

High current faults in the high side of the unit transformer can cause ct saturation that may inhibit operation of the 87T or 87U differential relays. Similarly, high side unit auxiliary transformer faults can cause ct saturation that disables both the 87T and 50/51 relays. In these cases, the fault pressure relays provide the required protection. These relays also are needed to detect ground faults in the transformer medium voltage

Copyright The Institute of Electrical and Electronics Engineers, Inc.
Provided by IHS under license with IEEE
No reproduction or networking permitted without license from IHS
Not for Resale

windings that the differential relay (87U) can not see due to the low resistance grounding of the medium voltage auxiliary system.

4.9.2.1 Protection

Relays which respond either to sudden pressure changes in the gas above the oil or in the oil itself are used to detect a fault within the transformer tank, with more sensitivity than a differential relay. They have an inverse-time characteristic to respond faster to more severe faults, and yet will not trip under normal pressure variations experienced with loading and temperature changes.

4.9.2.2 Tripping modes

Both the unit transformer and the unit auxiliary transformer fault pressure relays should be connected to lockout relays that are separate from the lockout relays connected to the differentials. In some system configurations, these lockout relays trip the main generator and field and/or exciter breakers, trip the prime mover, and transfer the unit auxiliaries. However, if the unit auxiliary transformer has a breaker to isolate it from the generator bus, then that breaker can be tripped and the unit auxiliaries transferred without affecting the generator or field and exciter breakers or tripping the prime mover. See the cautionary advice in 4.5.1.4.

5. Other protective considerations

5.1 Current transformers

The performance of the sensitive, high-speed differential protection used in the generator zone depends to a large degree on the overall performance of the current transformers (cts) used with these schemes. While there are a number of factors that may affect cts, of particular concern are the effects of residual flux and stray external flux fields (proximity effects).

5.1.1 Residual flux

Residual flux can be left in cores of conventional cts by normal interruption of an offset fault current and by the use of direct current (dc) in the testing of cts. With regard to the latter point, it is common practice to use a dc source to check ct polarity and circuit continuity. When making these tests, the interruption of the dc source can leave high levels of residual flux in the core. This residual flux can adversely affect both the steady-state and the transient performance of the cts used in a differential scheme, especially when the residual flux levels are different in each ct.

With unequal residual flux levels in differentially connected cts, the difference in ratio errors between the cts can be sufficient to cause the misoperation of sensitive differential relays under normal load conditions.

Under fault conditions, residual flux levels can cause rapid unequal saturation of the differential cts, which in turn may prevent operation or cause incorrect operation of a differential scheme for internal or external faults, respectively.

The effects of residual flux can be minimized by demagnetizing the cts after they have been tested during a maintenance shutdown. The use of cts with small air gaps in the core will greatly reduce the effects of residual flux. These cts are generally designed to limit residual flux below 1.5 kG where for all practical purposes the residual will have little or no effect on ct performances.

Demagnetization of high-ratio generator cts can be accomplished by connecting an ac source to the ct secondaries and raising the secondary voltage until the ct is driven into saturation as determined from the secondary excitation curve for the ct; the voltage should then be gradually decreased to zero. Some high ratio

--`,,`-`-`,,`,,`,`,,`---

Copyright The Institute of Electrical and Electronics Engineers, Inc.
Provided by IHS under license with IEEE
No reproduction or networking permitted without license from IHS Not for Resale

cts may have high knee-point voltages, which will fall in the 1000–1500 V range. In these cases, a maximum applied voltage of 2000 V will generally be sufficient to saturate the ct. In any case, the maximum applied voltage should *never* exceed the 2500 V dielectric test specified by IEEE Std C57.13-1993 for cts.

5.1.2 Proximity effects

The proximity of a current-carrying conductor to a ct can affect the overall performance of the ct. The stray flux field produced by the current-carrying conductor can cause both phase angle and ratio errors which in turn can cause incorrect operation of differential schemes under both steady state (load) and fault conditions.

The adverse effects of stray fields (proximity effects) can be minimized by using cts with shield windings and in some cases with the use of twisted and shielded cable.

5.2 Voltage transformers

Loss of the voltage transformer (vt) signal can occur due to a number of causes. The most common reason is fuse failure. Other causes may be actual vt or wiring failure, an open in the draw-out assemblies, contact opening by corrosion, or fuse blowing due to screwdriver shorts during on-line maintenance. Such loss of vt signal can cause misoperation/failure to operate of protective relays or generator voltage regulator run away leading to an overexcitation condition. This portion of the guide identifies schemes to detect the loss of voltage signal. Some method of detection is required so that the affected relay tripping can be blocked and the voltage regulator transferred to manual operation. This subclause also addresses additional concerns regarding the application of vts. These are ferroresonance and grounding, as well as the use of current limiting resistors.

5.2.1 Blown fuses

It is common practice, on large generators, to use two or more sets of vts in the generator zone. These vts, connected grounded wye-grounded wye, normally have secondary and possibly primary fuses and are used to provide potential to a number of protective relays and the voltage regulator. If one or more of the fuses blow in the vt circuits, the secondary voltages applied to the relays and voltage regulator will be reduced in magnitude and shifted in phase angle. This change in voltage can cause both the relays to misoperate and the regulator to overexcite the generator. The same effect can result from an open vt circuit.

5.2.1.1 Failure detection by comparison

To eliminate the possibility of such misoperations, it is common practice to apply a voltage-balance relay which compares the three-phase secondary voltages of two sets of vts as shown in figure 5.2-1. If the fuses blow in one set of vts, the resulting unbalance will cause the relay to operate. If a fuse blows in the voltage regulator vts, the relay will alarm and remove the voltage regulator from service. If a fuse blows in the protective relay vts, the relay will alarm and block possible incorrect tripping by protective relays whose performance may be affected by the change in potential. Typical relay functions such as 21 V, 40 V, and 51 V are normally blocked.

Historically the relay has been set around 15% unbalance between voltages. A concern when considering the setting of this relay is that corrosion or poor contact of the vt stabs can result in a voltage drop in the circuit significant enough to cause a regulator runaway (overexcitation) but too small for detection by the relay. This is due to the sensitivity of the automatic voltage regulator circuitry.

Copyright The Institute of Electrical and Electronics Engineers, Inc.
Provided by IHS under license with IEEE
No reproduction or networking permitted without license from IHS
Not for Resale

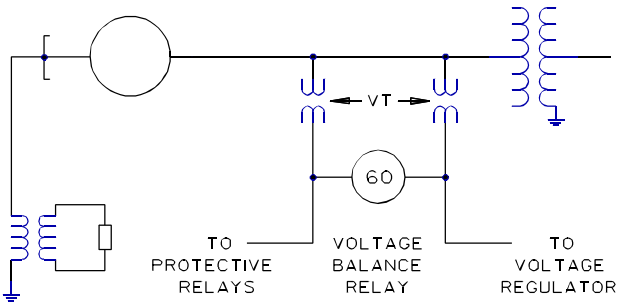

Figure 5.2-1—Application of voltage balance relay

5.2.1.2 Failure detection by symmetrical component analysis

A modern method used in vt failure detection makes use of the relationship between sequence voltages and currents during a loss of potential. When one vt signal is lost the three phase voltages become unbalanced. Due to this unbalance, a negative sequence voltage is produced. Positive sequence voltage diminishes for a loss of a vt signal. To distinguish this condition from a fault, both negative and positive sequence generator currents are checked. This type of detection can be used when only one set of vts are applied to the generator system.

5.2.2 Vt application concerns

Two concerns will be addressed in this subclause regarding the proper application of vts. These are

a) Ferroresonance and grounding
b) Use of current limiting resistors

5.2.2.1 Vt ferroresonance and grounding

A ferroresonance phenomena can be created when wye/wye vts with grounded primaries are connected to an ungrounded system.

This condition can occur in the generator zone if either the generator neutral becomes disconnected or the generator is electrically disconnected and the vts are left connected to the delta winding of the unit transformer as illustrated in figure 5.2-2. Should a higher than normal voltage be impressed across the vt windings during backfeeding due to a ground fault or switching surge on the ungrounded system, the likelihood of ferroresonance is enhanced. The higher voltage requires the vts to operate in the saturated region which promotes the ferroresonance oscillations. These high currents can cause thermal failure of the vts in a short period of time.

By using line-to-line rated vts connected line to ground, the potential for ferroresonance can be reduced. To completely suppress ferroresonance, it may be necessary to apply resistance loading across each phase of the secondary winding sufficient to produce loading equal to the thermal capability of the vt.

This solution can be used during the above mentioned special operating conditions. During normal operation these resistive loads should be removed.

Copyright The Institute of Electrical and Electronics Engineers, Inc.
Provided by IHS under license with IEEE
No reproduction or networking permitted without license from IHS Not for Resale

Note that during this special operating condition the normal ground fault protection is isolated from the energized system. Consideration should be given to installing a temporary ground-over voltage relay connected to the vts on the low side of the step-up transformer.

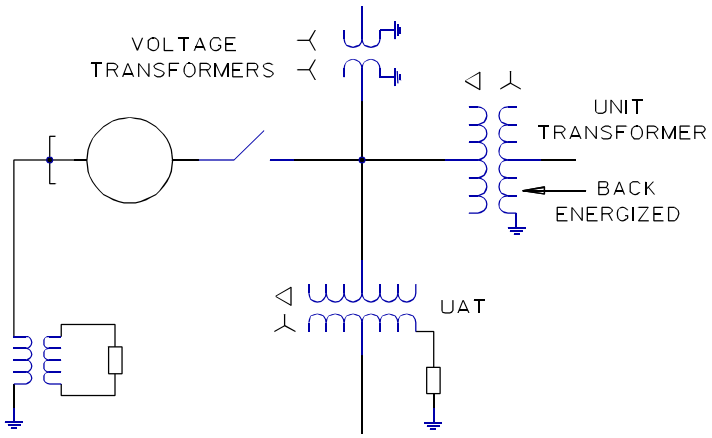

Figure 5.2-2—Generator zone configuration that may produce voltage transformer ferroresonance

Permanent ground fault and overvoltage protection can also be applied. If the grounded wye-grounded wye vts have an idle (unused) secondary winding, these idle windings can be connected into a broken delta configuration. By applying a damping resistance across the break less than 45% (15% of X_m per phase) of the vt X_m, but not so low that the vts exceed their thermal rating, the ungrounded bus system is stable against ferroresonance [B54]. The minimum watt rating of this damping resistor can be calculated by squaring the $3E_0$ voltage across the broken delta connection when a bolted ground occurs on the primary bus, and dividing by the selected ohmic resistance of the resistor. A 60 Hz tuned ground overvoltage relay, also connected across the broken delta, can detect the arcing ground and clear the fault. If idle vt secondary windings are not available on the grounded wye-grounded wye main generator or main bus vts, then a wye-broken delta auxiliary set of vts loaded with the same relay and appropriate resistance across the open-delta can provide similar protection. The resistance loading on the idle windings or the auxiliary vts is negligible until a ground develops while the unit step-up transformer is in the backfeed mode. For this reason, a prudent practice would be to size the resistor for the rated thermal capability of the vts.

The criterion of $R_o \leq X_{co}$ for high resistance grounded systems can be checked to see if the broken delta resistor's resistance R is low enough to limit transient overvoltages due to arcing ground faults. See IEEE Std 142-1982. X_{co} is the primary side distributed per phase capacitive reactance to ground of the system and R_o is the effective primary side per phase resistance that equals R (vt voltage ratio)^2/3. If the above criterion is met, transient overvoltages should not be a problem. With the primary system unenergized, X_{co} can be determined by applying a voltage V across the broken delta connection with the resistor, overvoltage relay and all phase loads disconnected from the vts on the isolated bus system and measuring the current *I*. Since *I* is predominately leakage current due to the system capacitance to ground, X_{co} can be approximately calculated by V (vt voltage ratio)^2/3*I*.

5.2.2.2 Use of current limiting resistors

Current limiting resistors are sometimes used in vt circuits from isolated phase busses to insure that current limiting fuse ratings are not exceeded by fault current levels. Several issues arise that the user must be aware of regarding the proper application of current limiting resistors. A serious exposure occurs when only one resistor is used per phase with two or more vts applied. Figure 5.2-3 illustrates this arrangement.

Copyright The Institute of Electrical and Electronics Engineers, Inc.
Provided by IHS under license with IEEE
No reproduction or networking permitted without license from IHS
Not for Resale

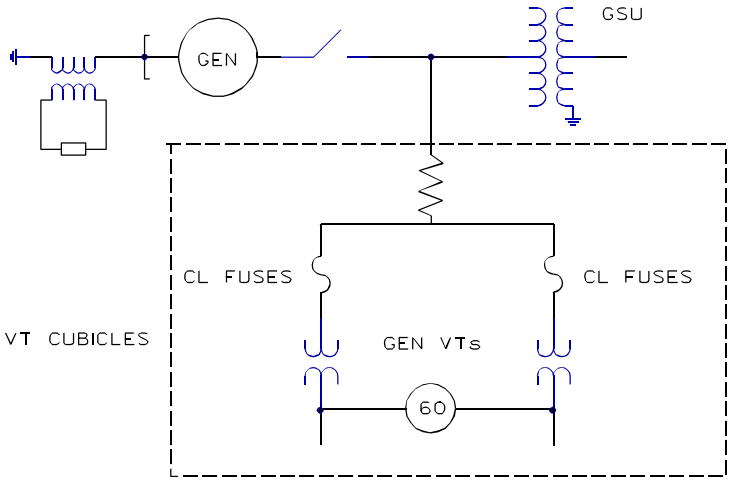

Figure 5.2-3—One current limiting resistor per phase

One concern is when the resistor fails open or partially fails inserting a high resistance in the circuit. The outcome of this is that with the open resistor both vts are left with zero or reduced voltage signals. This condition would render the voltage balance relay inoperative and automatic voltage regulator run away could occur.

Single switched voltmeter schemes would be impacted if connected to the afflicted phase. An operator may respond to the reduced voltage during a unit startup by inappropriately increasing the field to the point of failure. This is more than a hypothetical hazard, having occurred in practice, resulting in equipment damage.

A remedy to this problem is to provide a current limiting resistor for each vt, thereby eliminating the common mode failure of both vt circuits. Figure 5.2-4 shows the suggested circuit arrangement for this remedy.

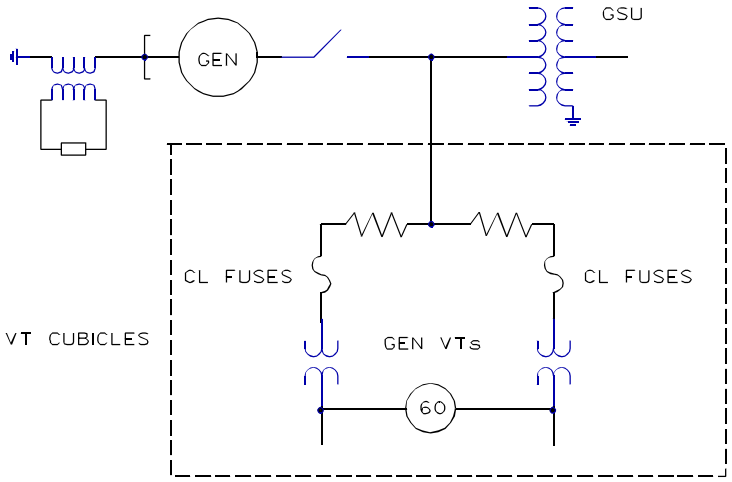

Figure 5.2-4—One current limiting resistor per vt

Copyright The Institute of Electrical and Electronics Engineers, Inc.
Provided by IHS under license with IEEE
No reproduction or networking permitted without license from IHS
Not for Resale

When requested, manufacturers provide this arrangement, the potential of the above mentioned conditions are minimized and allow the voltage balance relay to operate appropriately. Use of failure detection by symmetrical components will successfully provide vt failure detection when the common resistor arrangement is used for both generator vts.

5.3 Protection during start-up or shut-down

During start-up or shut-down of a generator, in particular, cross-compound units, the unit may be operated at reduced and/or decreasing frequency with field applied for a period of time. When operating frequency decreases below rated, the sensitivity of some of the generator zone protective relays may be adversely affected. The sensitivity of a few relays will only be slightly reduced while other relays will not provide adequate protection or become inoperative. Figure 5.3-1 shows the effects of frequency on the pickup of electromechanical relays which may be used in the generator zone. It should be noted that some relays lose sensitivity rather rapidly below 60 Hz. Induction disk current type relays could provide adequate protection down to 20 Hz while plunger type relays are not adversely affected by off-frequency operation.

Solid-state relays and digital protection systems have various frequency response characteristics. The specific effect of off-frequency operation should be checked with the manufacturer.

Current transformer performance can be a problem at reduced frequency. The knee-point ct voltage capability decreases with frequency. While the reactive component of most relay burdens also decreases with frequency, the resistive component does not, nor does the lead resistance. Therefore, the reduction in ct capability is not fully compensated for by a reduction in total burden.

Copyright The Institute of Electrical and Electronics Engineers, Inc.
Provided by IHS under license with IEEE
No reproduction or networking permitted without license from IHS
Not for Resale

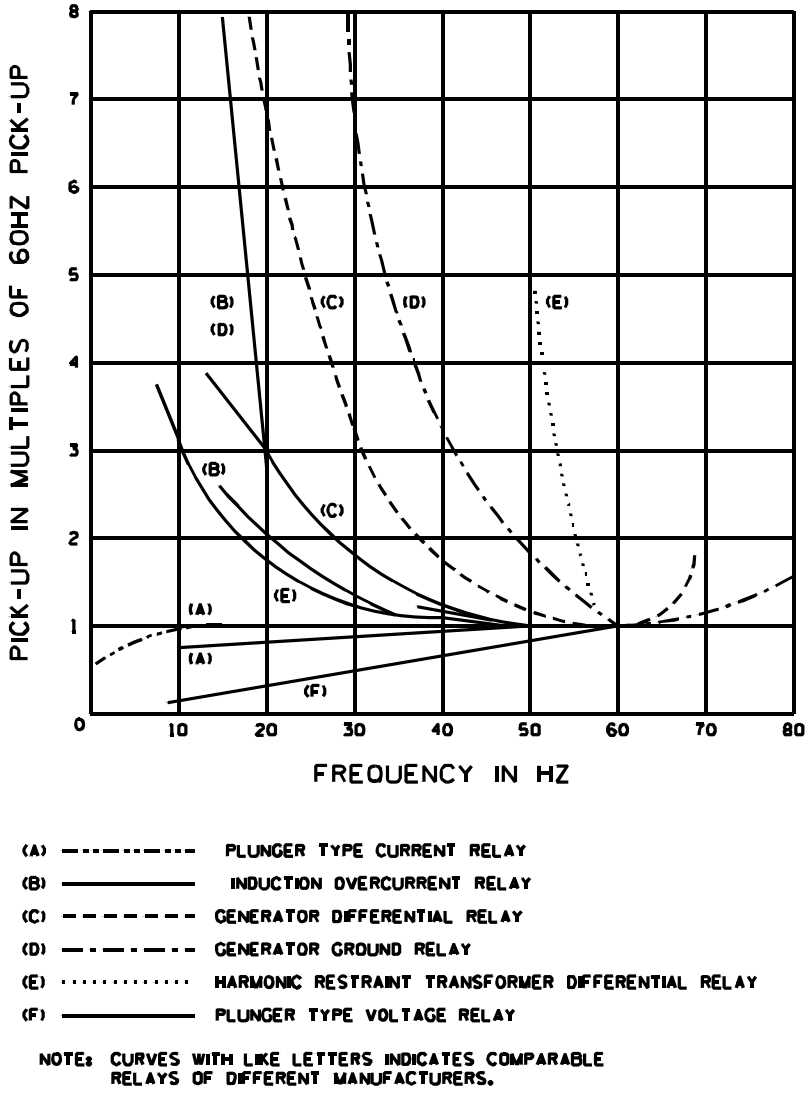

Figure 5.3-1—Example of relay pick-up versus frequency

Supplementary protection during start-up or shut-down of a unit generator transformer arrangement can be provided through the use of protective relays whose pickup is not adversely affected by frequency such as instantaneous overcurrent or plunger-type voltage relays. Supplementary protection using plunger type relays is shown in figure 5.3-2. In general, this protection would be placed in service only when the generator is disconnected from the system. A cut-off contact may be required to remove the relay from service to avoid exceeding the thermal rating of the relay.

Supplementary ground-fault protection can be provided by using a plunger-type voltage relay connected in parallel with the normal ground overvoltage protection. Relays with a pickup range of below 10 V would be desirable for this purpose.

Copyright The Institute of Electrical and Electronics Engineers, Inc.
Provided by IHS under license with IEEE
No reproduction or networking permitted without license from IHS Not for Resale

Supplementary phase fault protection can be provided by using plunger type instantaneous overcurrent relays in either one of the following two ct connections:

a) Placing instantaneous overcurrent relays in series with the operate circuits of the transformer differential relay
b) Placing instantaneous overcurrent relays in the ct phase leads which connect to the generator backup relays or metering

The first approach is capable of providing sensitive supplementary protection. In this method, the instantaneous overcurrent relay would be set above the difference current that will flow in the differential circuit during normal 60 Hz operation to avoid damage due to continuous operation in the picked-up position. In general, the difference current will be small and it will be possible in most instances to set the instantaneous overcurrent relay at its minimum pickup setting.

One factor which must be considered when using this method is the effect of the instantaneous overcurrent burden on the 60 Hz operation of the transformer differential relays. The instantaneous overcurrent relay current coils will be in the differential circuit at all times and will present additional burden to the cts. The effect of added burden on the low-voltage cts will generally be negligible, but it may be necessary to check the ratio error of the high voltage cts.

When method b) is used (alternative position for 50 in figure 5.3-2), the plunger type of instantaneous overcurrent relay would have to be set above maximum full-load current so that the relay would not be picked up continuously when the machine is on line. This setting would not provide as sensitive protection during start-up or shutdown. If a pickup setting below full-load current is used, the instantaneous overcurrent relay coil would have to be short circuited before the machine is connected to the system since plunger relays cannot be operated picked up continuously. In general, short circuiting current coils is not considered a desirable practice. Method b) has an advantage in that it may also be used to provide protection for accidentally energizing a generator on turning gear. In this instance, it could be used in place of the fault-detector relay as discussed in 5.4.

When generators are bused at their terminals, supplemental ground protection could be provided by using a sensitive instantaneous overcurrent relay in series with the time overcurrent relay normally used for protection. These relays are connected to cts located on the neutral end of the machine phase winding.

Supplemental phase fault protection could be provided by method b). In this case, it would be necessary to short circuit both the phase and ground instantaneous overcurrent relays current coil when the machine is connected to the system if both relays could be picked up continuously.

The supplementary protection for both types of generator arrangements is usually deactivated when the units are connected to the system. This can be accomplished by opening the trip circuits with a breaker “b” switch, directional or voltage sensing relay, or with an underfrequency relay as shown in figure 5.3-2.

Copyright The Institute of Electrical and Electronics Engineers, Inc.
Provided by IHS under license with IEEE
No reproduction or networking permitted without license from IHS
Not for Resale

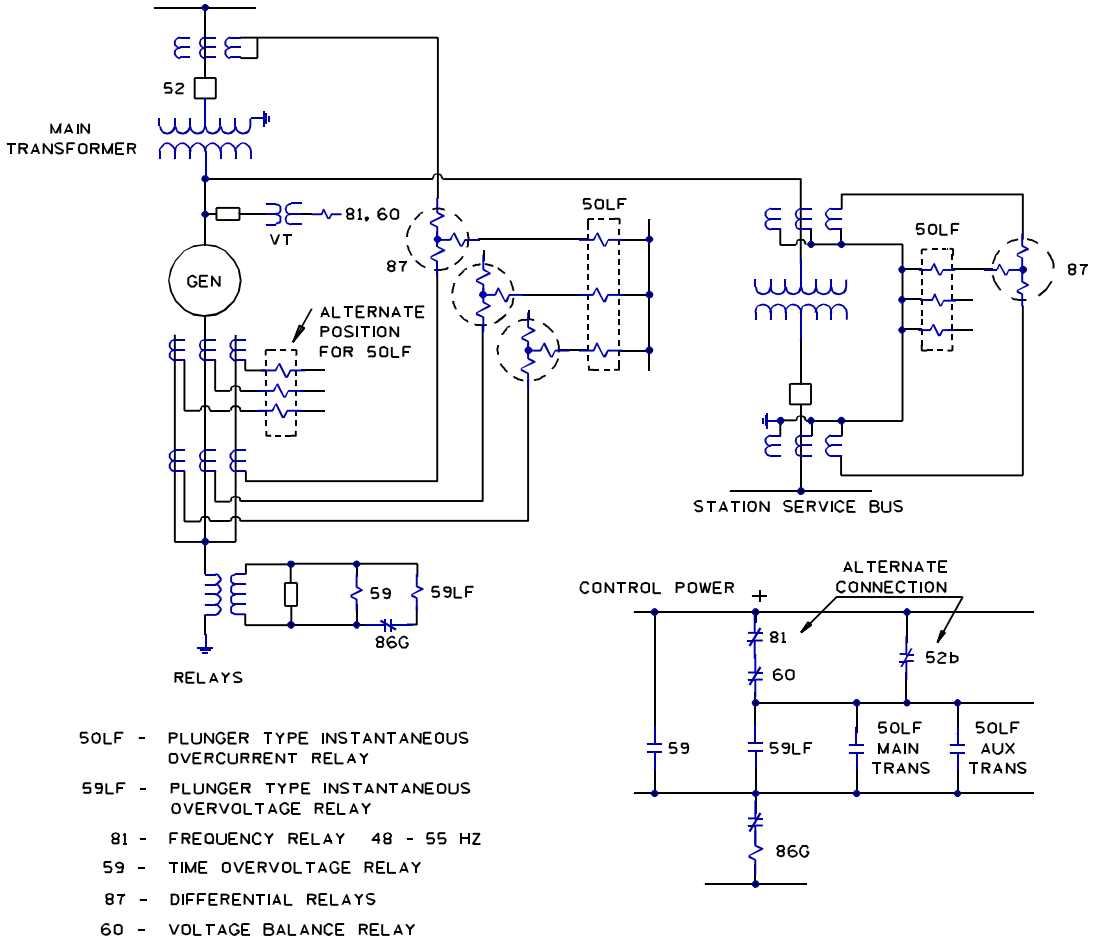

Figure 5.3-2—Protection during low-frequency operation

5.4 Inadvertent energizing

Inadvertent or accidental energizing of off-line generators has occurred often enough to warrant installation of dedicated protection to detect this condition. Operating errors, breaker head flashovers, control circuit malfunctions or a combination of these causes have resulted in generators being accidently energized while off-line. This subclause discusses the problem of generator inadvertent energization, the limitations of conventional generator protection to detect this condition, and the use of dedicated inadvertent energizing protection schemes.

The problem is particularly prevalent on large generators that are commonly connected through a disconnect switch to either a ring bus or breaker-and-a-half bus configuration. These bus configurations allow the high-voltage generator breakers to be returned to service as bus breakers, to close a ring bus or breaker-and-a-half bay when the machine is off-line. The generator, under this condition, is isolated from the power system through only the high-voltage disconnect switch. While interlocks are commonly used to prevent accidental

Copyright The Institute of Electrical and Electronics Engineers, Inc.
Provided by IHS under license with IEEE
No reproduction or networking permitted without license from IHS
Not for Resale

closure of this disconnect switch, a number of generators have been damaged or completely destroyed when interlocks were inadvertently bypassed or failed and the switch accidentally closed.

When a generator on turning gear is energized from the power system (three-phase source), it will accelerate like an induction motor. The generator terminal voltage and the current are a function of the generator, transformer, and system impedances. Depending on the system, this current can be as high as 3–5 pu and as low as 1–2 pu of the machine rating. While the machine is accelerating, high currents induced into the rotor can cause significant damage in only a matter of seconds.

If the generator is accidentally back-fed from the station auxiliary transformer, the current can be as low as 0.1–0.2 pu. While this is of concern and has occurred, there have not been reports of extensive generator damage from this type of energization, however, auxiliary transformers have failed.

5.4.1 Normally available relays

The normal relay complement for generator protection has serious limitations when trying to detect inadvertent energizing. Specifically, the following relays cannot be relied on to protect the generator for all of the following inadvertent energizing conditions:

a) Loss-of-excitation relays
b) Reverse-power relays
c) System backup relays
d) Negative sequence relays

5.4.2 Dedicated protection schemes

Unlike conventional schemes, which provide protection when the generator is on-line, these schemes are designed to protect the generator when it is off-line. Great care is required to insure that dc tripping power and input quantities are not removed when the generator is off-line. Consideration should be given to locating this protection in the switchyard where it is less likely to be disabled during generator maintenance.

Relays that are voltage dependent are disabled if the standard procedure is to remove voltage transformer fuses when the machine is off-line. For reverse-power relays, with the potential applied, a voltage drop of 50% or more will usually render them inoperative. Relays with intentional time delay for coordination purposes are too slow to provide any substantial protection for inadvertent energization.

When assessing whether a relay will provide adequate protection, it is necessary to determine its status when the generator is off-line. There have been numerous cases reported where all of the generator protection was inoperative when the machine was accidentally energized.

Common schemes used to detect inadvertent energizing are

a) Directional overcurrent relays
b) Frequency supervised overcurrent
c) Distance relay scheme
d) Voltage supervised overcurrent
e) Auxiliary contacts scheme with overcurrent relays

5.4.2.1 Directional overcurrent

This scheme has three directional inverse time overcurrent relays that use current and voltage sensing from the generator terminals. It is necessary to choose a relay with a maximum sensitivity angle combined with the current transformer connection to assure that the underexcited loading capability of the machine is not

Copyright The Institute of Electrical and Electronics Engineers, Inc.
Provided by IHS under license with IEEE
No reproduction or networking permitted without license from IHS
Not for Resale

appreciably impaired. The setting used may involve a compromise between desired sensitivity and a setting at which the relay will not be thermally damaged by machine full load current. This scheme is dependant on potential being present for operation. Thus, if operating procedures dictate removing voltage transformer fuses when the generator is off-line, this scheme is not recommended [B88].

5.4.2.2 Frequency supervised overcurrent

This scheme uses a combination of frequency and overcurrent relays that are only enabled when the machine is off-line. The current relays are instantaneous overcurrent with a pick-up setting of about half of the expected inadvertent energizing current. The underfrequency relays are set to close their contacts when the frequency falls below the setting, which is in the range of 48–55 Hz, thus enabling the overcurrent relay. This scheme may require pick-up and drop-out time delays and voltage balance supervision to prevent misoperation. For this scheme to work properly, the underfrequency relay contact must be closed when there is no voltage. Relays which do not operate below 50% voltage should not be used for this application.

5.4.2.3 Distance relay

There are a number of schemes developed using distance relays to “look into” the generator from the high voltage switchyard. The distance relay is set to detect the sum of the reactance of the unit step-up transformer and the machine negative sequence reactance with appropriate margin. In some cases, the distance relay is supervised by an instantaneous overcurrent relay to prevent false operation on loss of potential. Since the impedance relay can operate for stable power swings, a thorough stability analysis is required to ensure the relay will not operate for such swings. Additional protection is required for single-phase energization, since the distance relay has limited capability to detect this condition [B88]. Also, in order to prevent undesirable operations on recoverable swings, it may be desirable to delay operation of this relay by 0.1 s [B65].

5.4.2.4 Voltage supervised overcurrent

This scheme uses under and overvoltage relays with pick-up and drop-out time delays to supervise instantaneous overcurrent tripping relays. The undervoltage detectors automatically arm the over-current relays when its generation is taken off-line. Overvoltage relays disable the scheme when the machine is put back in service. This scheme does use potential from the generator voltage transformers, but will work properly even if it is the practice to remove voltage transformer fuses when the generator is off-line. This scheme is well suited for location in the switchyard where it is less likely to be accidentally removed from service during generation maintenance.

5.4.2.5 Auxiliary contact-enabled overcurrent

This scheme uses the generator field breaker auxiliary contacts to enable non-directional instantaneous overcurrent relays when the field breaker is either open or racked out. Overcurrent relays are set for 50% of the minimum accidental energizing current. Coordination time delays are used to prevent misoperation. Although this scheme will not provide protection after the field is applied to the unit, it is preferred over the scheme which uses the auxiliary contacts of a motor operated disconnect and high voltage generator breakers to supervise these same non-directional instantaneous relays. This latter scheme will provide accidental energizing protection for the unit regardless of the frequency or voltage applied to the unit. The drawback to this scheme is the complexity of the contact logic and the unreliability of the auxiliary contacts, particularly those on the motor operated disconnect. This kind of off-line supervision should be avoided. Also, if the motor could ever be disengaged from the disconnect switch such that the auxiliary contacts would not follow the switch position, inadvertent energizing protection may not be enabled and personnel could be endangered.

Copyright The Institute of Electrical and Electronics Engineers, Inc.
Provided by IHS under license with IEEE
No reproduction or networking permitted without license from IHS Not for Resale

5.4.2.6 Summary recommendations

Inadvertent energization protection was expanded in this guide to alert protection engineers to the real and devastating consequences of inadvertently energizing a generator. Conventional generator protection schemes are typically insensitive or so slow to operate that they do not prevent the generator from being damaged. Therefore, it is recommended that some form of dedicated inadvertent energizing scheme be used as part of an overall generator protection package. This scheme should be isolated so that there is good assurance that it will not be disabled during plant shutdown or maintenance.

5.5 Subsynchronous resonance

When a generator is connected to a transmission system that has series capacitor compensation, it is possible to develop subsynchronous frequency oscillations and shaft torques which can be damaging to the generators. Therefore, when a generator will be operating on such a series compensated system, the user should work closely with the generator manufacturer in order to ascertain the severity of the problem and to define the requirements for equipment to protect the generator on a particular system. The successful mitigation of the oscillations may be accomplished by equipment selection, control, and protection techniques.

5.5.1 Equipment selection

Where subsynchronous resonance is expected, install generators with pole face amortisseur windings. These windings will reduce the machine impedance in the subsynchronous range, minimizing torsional interaction at subsynchronous frequencies. Selection of the proper amount of series compensation to avoid subsynchronous resonance is another technique.

5.5.2 Control

Several control techniques may dampen oscillations before a trip is necessitated. Some examples are the application of control dampening in the excitation system to alter power output, subsynchronous blocking filters to limit subsynchronous currents, series capacitor bypass switches that close upon detection of subsynchronous resonance, and torsional dynamic stabilizers.

5.5.3 Protection

When the above techniques either fail or have not been applied, protective devices can be applied to remove the generator from the system. A torsional vibration monitor can be set to trip for both low level oscillatory torques that are growing in magnitude, and for very high level torques occurring between different sections of the shaft. The inputs are instantaneous watt and velocity derivation transducers. A subsynchronous resonance relay can also be set to trip when oscillations persist.

5.6 Transmission line reclosing near generating stations

Switching operations involving the opening and closing of circuit breakers at or near a generating station can produce transient power and current oscillations that can stress or damage turbine generators. Of particular concern are the switching operations that produce torsional oscillations and shaft torques, which may cause major shaft fatigue damage in one or relatively few incidents of severe switching disturbances. The switching disturbances of primary concern are:

a) Steady-state switching of lines
b) High-speed reclosing of circuit breakers following transmission line faults

Copyright The Institute of Electrical and Electronics Engineers, Inc.
Provided by IHS under license with IEEE
No reproduction or networking permitted without license from IHS
Not for Resale

5.6.1 Steady-state switching of lines

The switching of lines near a generating station for maintenance purposes can produce a step change in power, which can result in transient mechanical forces on both the rotating and stationary components of a turbine generator. This sudden change in power is a function of the switching angle across an open circuit breaker and the system impedance. Studies have shown that if switching from a steady-state condition results in an instantaneous change in power, ΔP, not exceeding 0.5 pu, the duty (loss of life) on the turbine generator will be negligible. If this change in power, ΔP, exceeds 0.5 pu, it is recommended that the turbine-generator manufacturer be consulted in order to determine if there is potential for significant damage.

5.6.2 High-speed reclosing following system faults

High-speed reclosing of transmission lines at or near a generating station following a fault has the potential for causing major shaft fatigue damage to a turbine generator. Of particular concern is the possibility of an unsuccessful reclosure into a persistent fault that may reinforce the torsional oscillations and shaft torques caused by the original disturbance and thereby cause a significant loss in fatigue life of turbine-generator shafts. Studies of this problem would indicate that high-speed reclosing into nearby severe faults can result in a significant loss of shaft fatigue life.

In order to minimize the potential detrimental effects of high-speed reclosing of transmission lines near generating stations, the following alternative reclosing practices are being proposed as a means for reducing fatigue duty:

a) *Delayed reclosing for all faults.* A delay of 10 s or longer is suggested.

b) *Sequential reclosing.* Reclose initially from the remote end of a line and block reclosing at the generating station if the fault persists. This approach is only applicable if the remote end of the line is not electrically near turbine generator units. Reclosing remote on long lines can cause transient overvoltage if the other end of the line is a weak source.

c) *Selective high-speed reclosing.* The type of reclosing used (high-speed or delayed) is a function of fault severity or the type of fault.

d) *Single-phase tripping and reclosing.* Trip only the faulted phase and delay its reclose until after secondary fault arc extinction. This provides an advantage that the remaining connected phases tend to hold the machine in synchronism during the first clearing attempt, minimizing power swings, helping to maintain stability.

5.7 Synchronizing

Improper synchronizing of a generator to a system can result in damage to the generator step-up transformer and any type of generating unit. The damage incurred can be slipped couplings, increased shaft vibration, a change in bearing alignment, loosened stator windings, loosened stator laminations and fatigue damage to shafts and other mechanical parts.

In order to avoid damaging a generator during synchronizing, the generator manufacturer will generally provide synchronizing limits in terms of breaker closing angle and voltage matching. Typical limits are given in the following paragraphs:

Breaker closing angle: within ±10 electrical degrees. The closing of the circuit breaker should ideally take place when the generator and the grid are at zero degrees phase angle with respect to each other. To accomplish this, the breaker must be indexed to close in advance of phase angle coincidence to accommodate for the breaker closing time.

Copyright The Institute of Electrical and Electronics Engineers, Inc.
Provided by IHS under license with IEEE
No reproduction or networking permitted without license from IHS Not for Resale

This is mathematically expressed as

$\phi A = 360 \cdot F_S \cdot T_S$

where

ϕA is the advance angle in degrees
F_S is the slip frequency in Hertz
T_S is the breaker closing time in seconds

Voltage matching: 0–+5%. The voltage difference should be minimized and not exceed 5%. This aids in maintaining system stability by insuring some VAR flow into the system. Additionally, if the generator voltage is excessively lower than the grid when the breaker is closed, sensitively-set reverse-power relays may trip.

Frequency difference: less than 0.067 Hz. The frequency difference should be minimized to the practical control/ response limitations of the given prime mover. A large frequency difference causes rapid load pickup or excessive motoring of the machine. This manifests itself both as power swings on the system and mechanical torques on the machine. Additionally, if the machine is motored, sensitively set reverse-power relays may trip.

Slip frequency limits applied for certain machine types are based on the ruggedness of the turbine generator under consideration and the controllability of the turbine generator.

There are several synchronizing approaches used to minimize the possibility of damaging a generator. These are as follows:

a) Automatic synchronizing
b) Semi-automatic synchronizing
c) Manual synchronizing

5.7.1 Automatic synchronizing system

Complete automatic synchronizing includes an integrated combination of elements that monitor voltage magnitude, phase angle, and rate of change of the phase angle across a controlled circuit breaker. It takes into account the closing time of the controlled breaker to predict when to initiate closing. This system includes an automatic synchronizer and elements (relays or modules) to monitor and control the frequency and voltage of the generator.

The synchronizing relay measures the speed of the generator relative to the system, the phase angle between the generator and the system, and then gives a closing impulse to the breaker at the correct angle in advance of synchronism to ensure that the breaker poles will close when the machine and system are in phase. For a given breaker closing time, the closing impulse will be given at the correct angle in advance of synchronism provided that the frequency difference is within a set limit. In general, there must be a small difference in frequency between the generator and the system for the synchronizing relays to operate.

The speed matching relay is used to automatically match a generator frequency to a system frequency. To do this, the relay produces control signals that can be used to raise or lower generator speed. In general, generator speed is adjusted to be slightly higher than system frequency for synchronizing purposes to prevent motoring or tripping on reverse-power. Sync-check relays are often applied with automatic synchronizers to supervise the automatic control function.

In some instances, the speed-matching and voltage-matching functions are provided with the automatic

Copyright The Institute of Electrical and Electronics Engineers, Inc.
Provided by IHS under license with IEEE
No reproduction or networking permitted without license from IHS
Not for Resale

control systems supplied with the generator.

5.7.2 Manual and semi-automatic synchronizing systems

The manual synchronizing system relies on the operator's judgment for breaker closure while controlling generator voltage and frequency. The information required for the operator to make a closing decision is provided by a group of instruments. The operator's action may be supervised by additional devices, but are "transparent" to the operator, i.e., the devices act as permissive only and do not match speed and voltage or initiate closure.

The semi-automatic synchronizing system has aspects of both the manual and automatic systems in that the operator has supervision of the automatic device and may directly control the generator speed and voltage.

The relay used to perform the supervisory function is a sync-check relay. Depending on the sophistication of the applied relay, it may be of the phase angle/time and voltage variety or phase angle/slip relationship and voltage variety. The angular setting of the sync-check relay should be set to the maximum angle expected at the maximum slip frequency allowed for the particular application per the equation in 5.7. Utilization of an intentional time delay on a sync-check relay may result in undesirable closure beyond phase coincidence. Additional increments in angle must be added to account for relay propagation time, accuracy and contact debounce.

Both the closing angle and frequency difference cutoff are adjustable. In general, with this type of relay, the angular difference for synchronizing can be limited to 10^{N} or less.

High speed sync-check relays should be used for this supervisory role for either automatic or manual synchronizing applications due to the quick, repeatable response on rotation phase angle applications.

6. Protection specification

This clause presents detailed protective arrangements for six generating station configurations. There is a one-line diagram for each station configuration. A typical control logic diagram for the unit generator-transformer connection illustrates the combination of protective relays, with their control functions, normally applied in accordance with good engineering practices. The intent of these diagrams is to illustrate one approach for providing protection. The reader can modify the protection provided to meet his particular protective philosophy and reliability requirements. While it is generally agreed that the unit is tripped, steam system is shutdown and auxiliaries are transferred for internal electrical faults, there is no generally agreed on approach for condition items such as volts/hertz, underfrequency, etc. See IEEE Std 502-1985 for further discussion.

The protection of combustion turbine generators (CTG) is quite similar to the protection of steam turbine generators. There are, however, certain differences in the design and application of CTGs that may result in different protection requirements. Since many CTGs are unmanned stations, control systems provide automatic protection. Figure 6-6 shows the recommended protection for a CTG.

6.1 Protective arrangements

The protective arrangements for the various generating station configurations are illustrated in figures 6-1 through 6-6.

A number of factors will determine the selection of a protective scheme for 100% stator ground, generator breaker failure and inadvertent energizing. To simplify the one-lines, examples of these schemes were not shown. These protective functions should be applied after considering factors described in the following

Copyright The Institute of Electrical and Electronics Engineers, Inc.
Provided by IHS under license with IEEE
No reproduction or networking permitted without license from IHS Not for Resale

related subclauses:

100% stator ground (4.3.3)
Generator breaker failure (4.7)
Inadvertent energizing (5.4)

Due to space restrictions, the figures do not incorporate external timers in all cases. Refer to appropriate clauses within the guide for timer applications.

6.2 Protective functions

The protective functions noted in the various generating station configurations provide both primary and backup protection for the generating station as well as additional protection schemes which could also be applied. These protective functions are listed below with a reference to the subclause in the text that discusses their application in detail. Also included is a discussion of the various tripping modes used in generating stations.

6.2.1 Protective Devices

Device	Function	Subclause
21	Distance relay. Backup for system and generator zone phase faults. Device 21 requires a time delay for coordination.	4.6.1
24	Volts/hertz overexcitation protection for the generator and its associated step-up and auxiliary transformers.	4.5.4
27	Undervoltage relay.	4.3.3.1
32	Reverse-power relay. Motoring protection.	4.5.5
40	Loss of field protection.	4.5.1
46	Stator unbalanced current protection. Negative sequence relay.	4.5.2
49	Stator thermal protection.	4.1
50N	Instantaneous overcurrent relay used as current detector in a breaker failure scheme.	4.7
50/51	Time overcurrent relays with instantaneous element. High-side bank overcurrent relays providing phase-fault protection for unit auxiliary transformer and backup protection for failure of UAT low-side bank breaker.	
50/51GN	Time overcurrent relay with instantaneous element. Primary and/or backup protection for generator ground faults.	4.3.3.1.1
51	Time overcurrent relay. Detection of turn-to-turn faults in generator windings.	4.3.2
51TN1	Time overcurrent relay. Provides backup protection for transmission ground faults when applied to GSU neutral. Protects for ground faults on the unit auxiliary bus when applied to UAT neutral.	4.6.2 4.6.4
51TN2	Time overcurrent relay. Provides backup protection for GSU ground faults	4.6.2

Copyright The Institute of Electrical and Electronics Engineers, Inc.
Provided by IHS under license with IEEE
No reproduction or networking permitted without license from IHS
Not for Resale

	when applied to GSU neutral. Protects for faults in the low-side of the UAT down to the low-side bank breaker when applied to UAT neutral. Provides backup for failure of low-side breaker to trip.	4.6.4

Device	Function	Subclause
51 UAT	Time overcurrent relays connected to current transformers in UAT low-side bank breaker. Protects for phase faults on unit auxiliary bus.	
51V	Voltage controlled or voltage-restrained time overcurrent relay. Backup for system and generator zone phase faults.	4.6.1
53	Exciter or dc generator relay.	4.5.4.4
59	Overvoltage protection.	4.5.6
59BG	Zero-sequence voltage relay. Ground fault protection for an ungrounded bus.	
59GN	Voltage relay. Primary ground fault protection for a generator.	4.3.3
60	Voltage balance relay. Detection of blown potential transformer fuses.	5.2.1.1
62B	Breaker failure timer.	4.7
63	Fault pressure relay. Detects transformer faults.	4.9.2
64F	Voltage relay. Primary protection for rotor ground faults.	4.4
71	Transformer oil or gas level.	4.9.1
78	Loss of synchronism protection. This protection is optional. Applied when, during a loss of synchronism, the electrical center is in the step-up transformer or in the generator zone. Alternate locations are shown for this protection. A study should be made to determine which location is best for the detection of an out-of-step condition.	4.5.3
81	Frequency relay. Both under frequency and overfrequency protection may be required.	4.5.7
86	Hand-reset lockout auxiliary relay.	
87B	Differential relay used for bus protection.	
87G	Differential relay. Primary phase-fault protection for the generator.	4.3.2
87GN	Differential relay. Sensitive ground-fault protection for the generator.	4.3.3.2
87T	Differential relay. Primary protection for the GSU or UAT transformer. May be used to provide phase fault backup for the generator in some station arrangements. The zone may be extended to cover the generator bus using cts from the generator and Unit Auxiliary Transformer when lowside cts are not available.	
87U	Differential relay for overall unit and transformer.	

Copyright The Institute of Electrical and Electronics Engineers, Inc.
Provided by IHS under license with IEEE
No reproduction or networking permitted without license from IHS Not for Resale

6.2.2 Tripping modes

Table 6-1 is an example of the trip logic for protective devices on a unit generator-transformer. It provides guidance in developing a generator protection trip scheme. Individual trip scheme logic will vary, dependent upon the owner's preference and the capabilities of the prime mover and steam supply system.

Where possible, the arrangement of the lockout relays should provide redundancy in both trip paths and trip functions, so that backup relays trip a separate lockout relay from the primary protection. The task associated with applying tripping schemes on generating units should not be underestimated. This effort requires a broad knowledge of the generating unit equipment and its behavior during both normal and abnormal conditions. It would be shortsighted if the only consideration given is to disconnect the generator from the electrical system without taking into consideration the precise manner in which the generating unit can be isolated from the power system for various protective relay operations.

Described below are four (4) common methods for isolating the generator from service following unacceptable abnormal operating conditions or electrical faults.

Simultaneous Tripping—Provides the fastest means of isolating the generator. This tripping mode is used for all internal generator faults and severe abnormalities in the generator protection zone. Isolation is accomplished by tripping at the same time the generator breakers, field breaker, and shutting down the prime mover by closing the turbine valves. Auxiliary loads are transferred to a standby source. If there exists a potential for significant overspeed condition of the unit, a time delay may be used in the generator breaker trip path. If time delay is used, the effect of this delay on the generator and/or system should be determined.

Generator Tripping—This mode of isolation trips the main generator and field breakers. The scheme does not shut down the prime mover and is used where it may be possible to correct the abnormality quickly, thereby permitting the reconnection of the machine to the system in a short period of time. This protection trips the generator for a power system disturbance, rather than an internal generator faults/abnormalitie. This mode can be used if permitted by the type of prime mover, boiler and governor control systems and requires that the unit be capable of quick response following a load rejection.

Unit Separation Tripping—A variation of the generator tripping scheme is one where only the main generator breakers are opened. It is recommended for applications when it is desirable to maintain the unit auxiliary loads connected to the generator. The advantage of this scheme is that the unit can be reconnected to the system with minimum delay. As with the generator tripping scheme, the unit shall be capable of a quick response following a load rejection.

Sequential Tripping—This mode is primarily used for steam turbines when delayed tripping has no detrimental effect on the generating unit. It is generally used to trip the generator for prime mover problems where high speed tripping is not a requirement. When the turbine control system indicates that the turbine has been tripped, tripping of the generator breaker followed by the field breaker is initiated. Inclusion of a reverse-power relay in series with a mechanical signal indicating that the turbine has been tripped provides security against possible overspeed of the turbine by ensuring that steam flows have been reduced below the amount necessary to produce an overspeeding condition when the generator breakers are tripped. For steam turbine problems this is the preferred mode since it prevents any overspeed of the machine. However, the disadvantage is that there is no trip output for a failure of the turbine control trip indication or reverse-power relay. If this approach is used, backup protection, in the form of motoring protection, should be provided to assure tripping of the generator main and field breakers in case there is a failure in the sequential trip signal. This mode should not override the generator switchyard protection that instantaneously opens the generator breaker when a critical electrical fault occurs that might cause serious damage to the generator or switchyard

Copyright The Institute of Electrical and Electronics Engineers, Inc.
Provided by IHS under license with IEEE
No reproduction or networking permitted without license from IHS
Not for Resale

equipment.

Many factors contribute to the decision on the selection of the appropriate tripping scheme. Listed below are several key items:

a) Type of prime mover—diesel/gas engine, gas turbine, steam turbine, or waterwheel
b) Impact of the sudden loss of output power on the electrical system
c) Safety to personnel
d) Operating experience
e) Management of unit auxiliary loads during emergency shutdown
f) Extent of damage or potential damage due to the fault or abnormality

Table 6-1 and logic diagram figure 6-1a provide an **example** of the trip function for the unit connected generator shown in figure 6-1. The specific trip logic is dependant upon many factors, including the plant electrical configuration, the operating capability of the turbine and the operational experience of the utility. The trip logic should be designed to minimize the impact of a failure of any protective relay or lockout relay.

6.2.3 Other generator tripping considerations

In large power plants, it is common to use a breaker-and-a-half yard layout with a disconnect on the generator feed. This allows the generator to be taken off-line, the disconnect opened, and the breakers closed to maintain another tie between the main busses. In the early phases of plant construction, it is common to have a ring bus configuration that will later be expanded to a breaker-and-a-half. The ring configuration requires a disconnect switch on the generator feed that can be opened so that the ring can be closed when the generator is off-line. Some engineers have used auxiliary contacts in the motor operator of these disconnect switches to disable some or all of the generator protection when the generator is off-line. While this appears to be a convenient indication of the status of the machine, it can be fooled by abnormal conditions and should be avoided.

6.2.3.1 Maintenance

When the generator is off-line for maintenance, safety rules and procedures may require the generator potential transformers to be racked out and tagged. Also, in some instances, current transformers may be shorted and even the station dc tripping source can be disconnected. The design engineer must be aware of these possibilities when determining the type and location of generator backup and inadvertent energizing protection. The common belief is that if the generator is off-line, the protection is not needed. However, the long list of generators that have been inadvertently energized tends to support the need to have as much of the protection in service as possible even when the machine is off-line. Refer to 5.4.

6.2.3.2 Disconnect switch

When protective relaying is routinely disabled with auxiliary contacts from the disconnect switch, the following should be carefully considered. Due to contamination, adjustment and linkage problems the auxiliary contacts may not properly close and vital protection can be out of service when needed most. Also, if the auxiliary contacts are located inside the motor operator compartment, they may only follow the motor mechanism and not the actual switch blades. When the motor operator is uncoupled from the switch shaft and the switch is closed manually, the protection will be out of service. Even if the auxiliary stack is mounted so that it follows the disconnect switch operating shaft, it is not considered reliable. Several very serious accidents can be traced directly to using auxiliary contacts to disable protection and this practice is not recommended.

6.2.3.3 Potential sensitive relays

Underfrequency relays that depend on potential may misoperate during startup if they are energized from the

Copyright The Institute of Electrical and Electronics Engineers, Inc.
Provided by IHS under license with IEEE
No reproduction or networking permitted without license from IHS Not for Resale

generator voltage transformers. An alternative to using the disconnect switch auxiliary contacts to disable these relays is to use switchyard potential or startup source potential. Electromechanical impedance type relays that use voltage for restraint can generally be adjusted so that there is sufficient spring restraint to keep the relays from misoperating during startup.

6.2.3.4 Control schemes

Some control schemes use the disconnect switch auxiliary contacts to disable certain boiler trips while the machine is in startup. This is fairly common on coal fired units where it takes a long time to get the machine on line. If a nuisance trip occurs, many hours may be wasted. While it is necessary to be sensitive to the control problems, the generator protection shall not be compromised in the process.

Copyright The Institute of Electrical and Electronics Engineers, Inc.
Provided by IHS under license with IEEE
No reproduction or networking permitted without license from IHS
Not for Resale

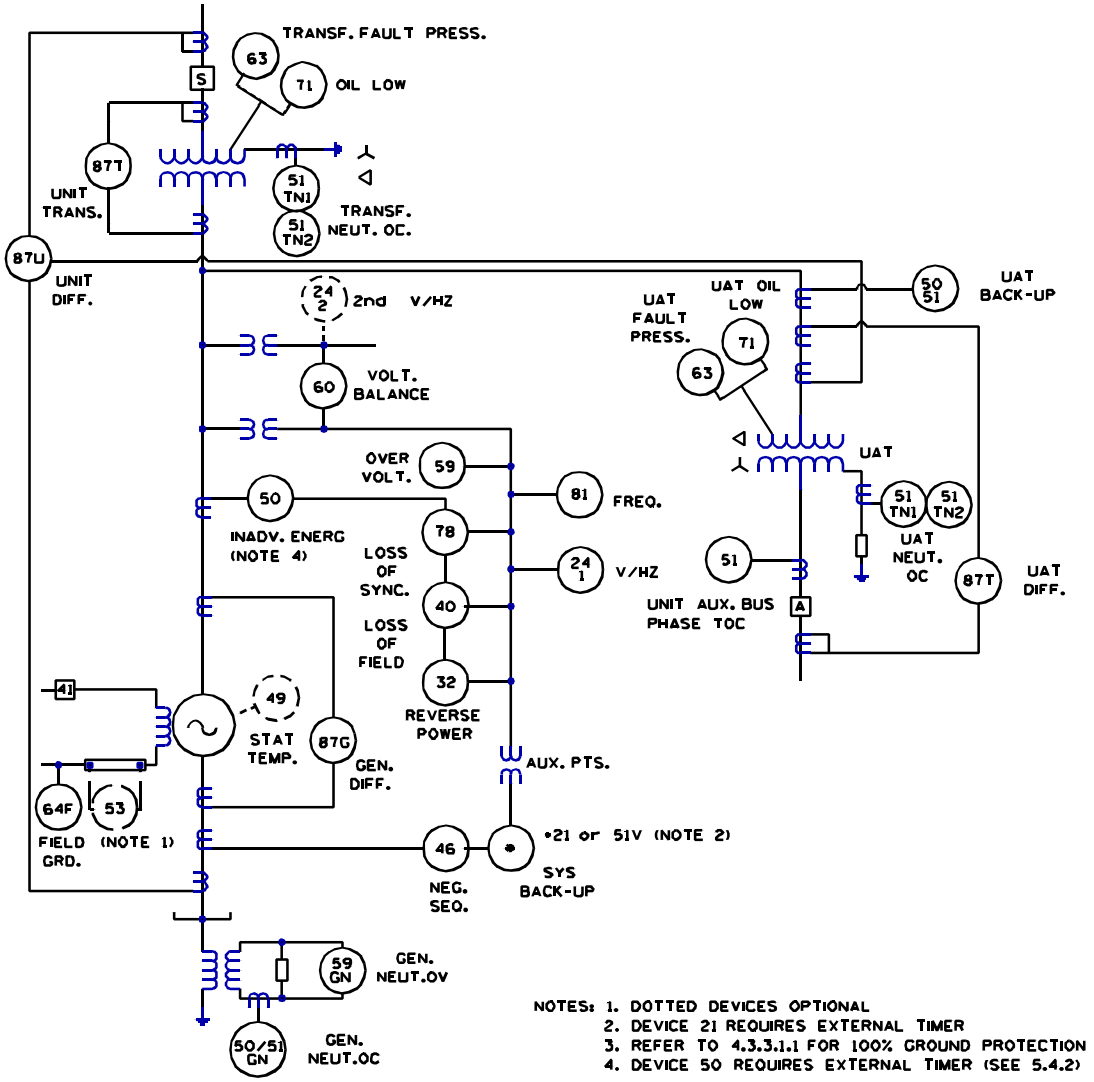

Figure 6-1—Unit generator-transformer configuration

Copyright The Institute of Electrical and Electronics Engineers, Inc.
Provided by IHS under license with IEEE
No reproduction or networking permitted without license from IHS
Not for Resale

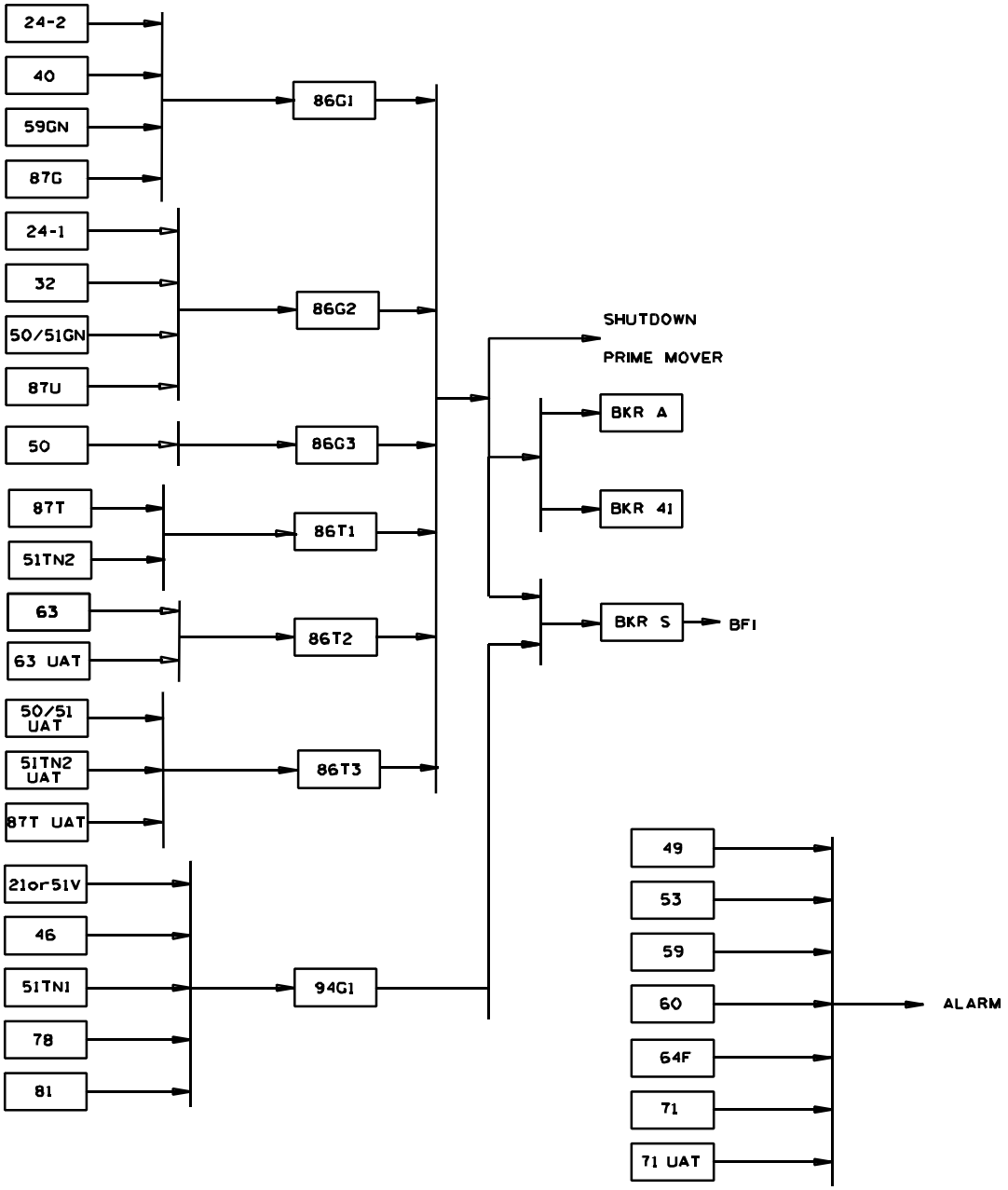

Figure 6-1a—Generator-transformer configuration dc tripping logic

Copyright The Institute of Electrical and Electronics Engineers, Inc.
Provided by IHS under license with IEEE
No reproduction or networking permitted without license from IHS
Not for Resale

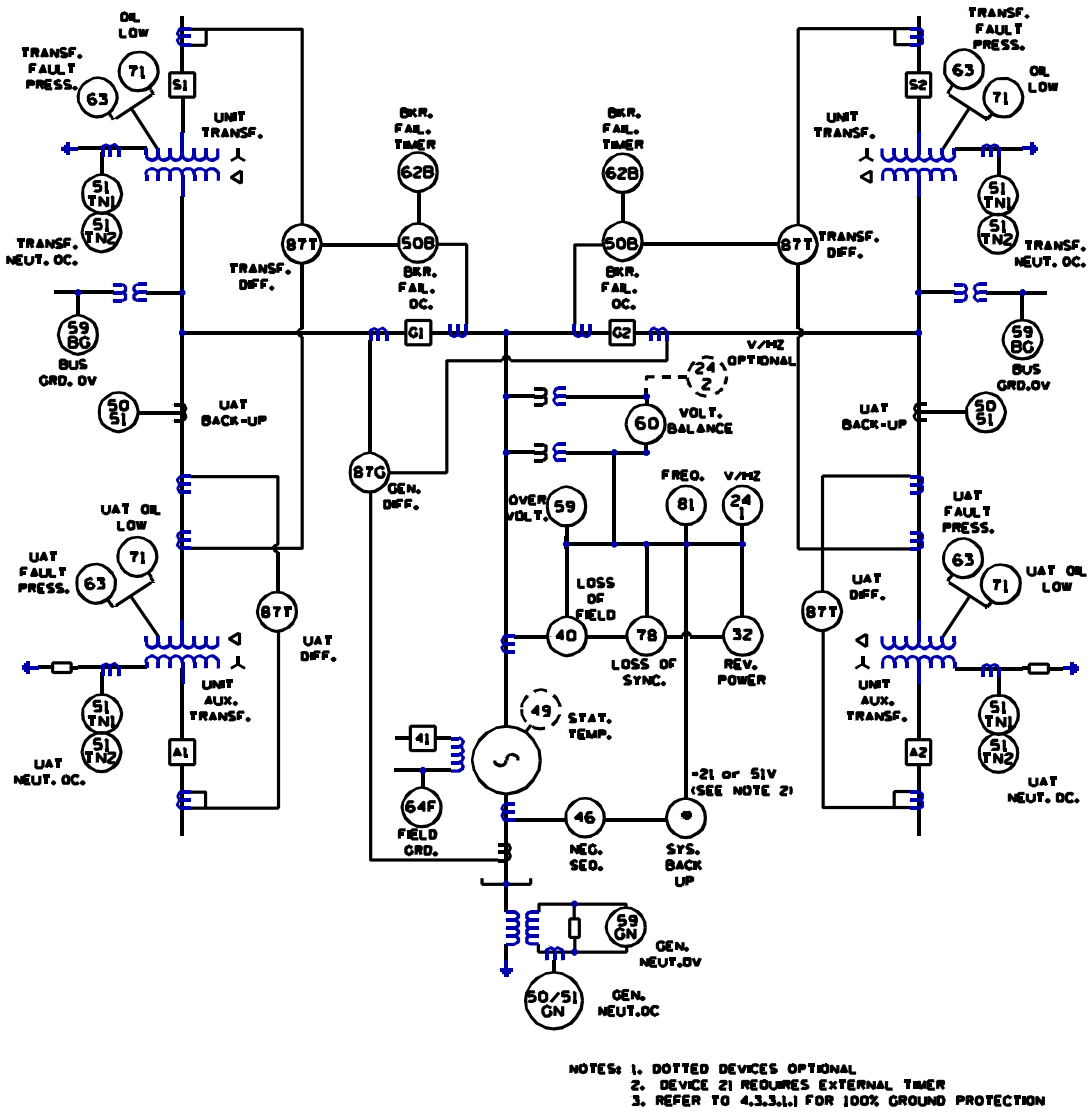

Figure 6-2—Unit generator-transformer configuration with dual generator breakers

Copyright The Institute of Electrical and Electronics Engineers, Inc.
Provided by IHS under license with IEEE
No reproduction or networking permitted without license from IHS
Not for Resale

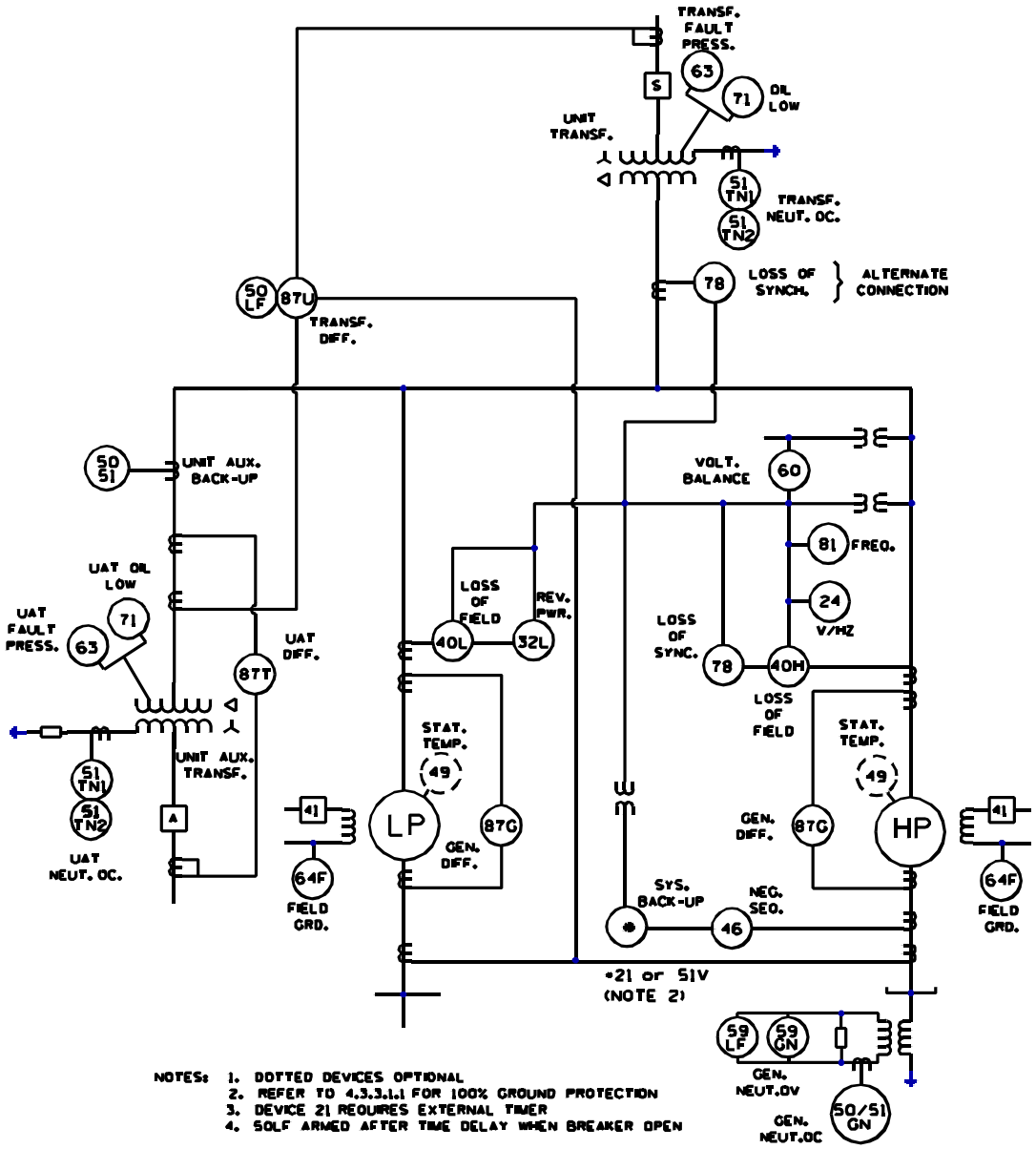

Figure 6-3—Cross-compound generators

Copyright The Institute of Electrical and Electronics Engineers, Inc.
Provided by IHS under license with IEEE
No reproduction or networking permitted without license from IHS
Not for Resale

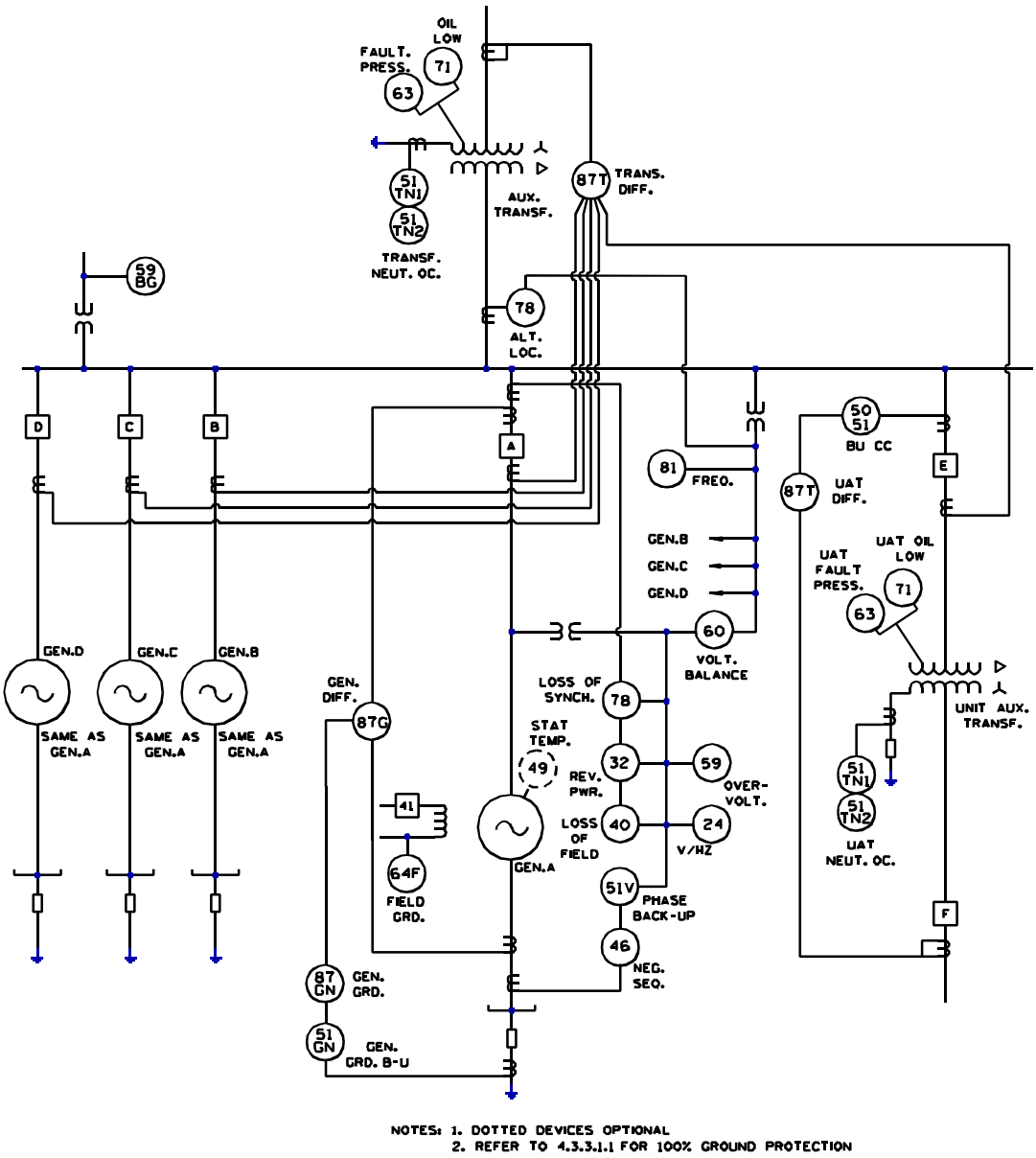

Figure 6-4—Protection for generators sharing a unit transformer

Copyright The Institute of Electrical and Electronics Engineers, Inc.
Provided by IHS under license with IEEE
No reproduction or networking permitted without license from IHS
Not for Resale

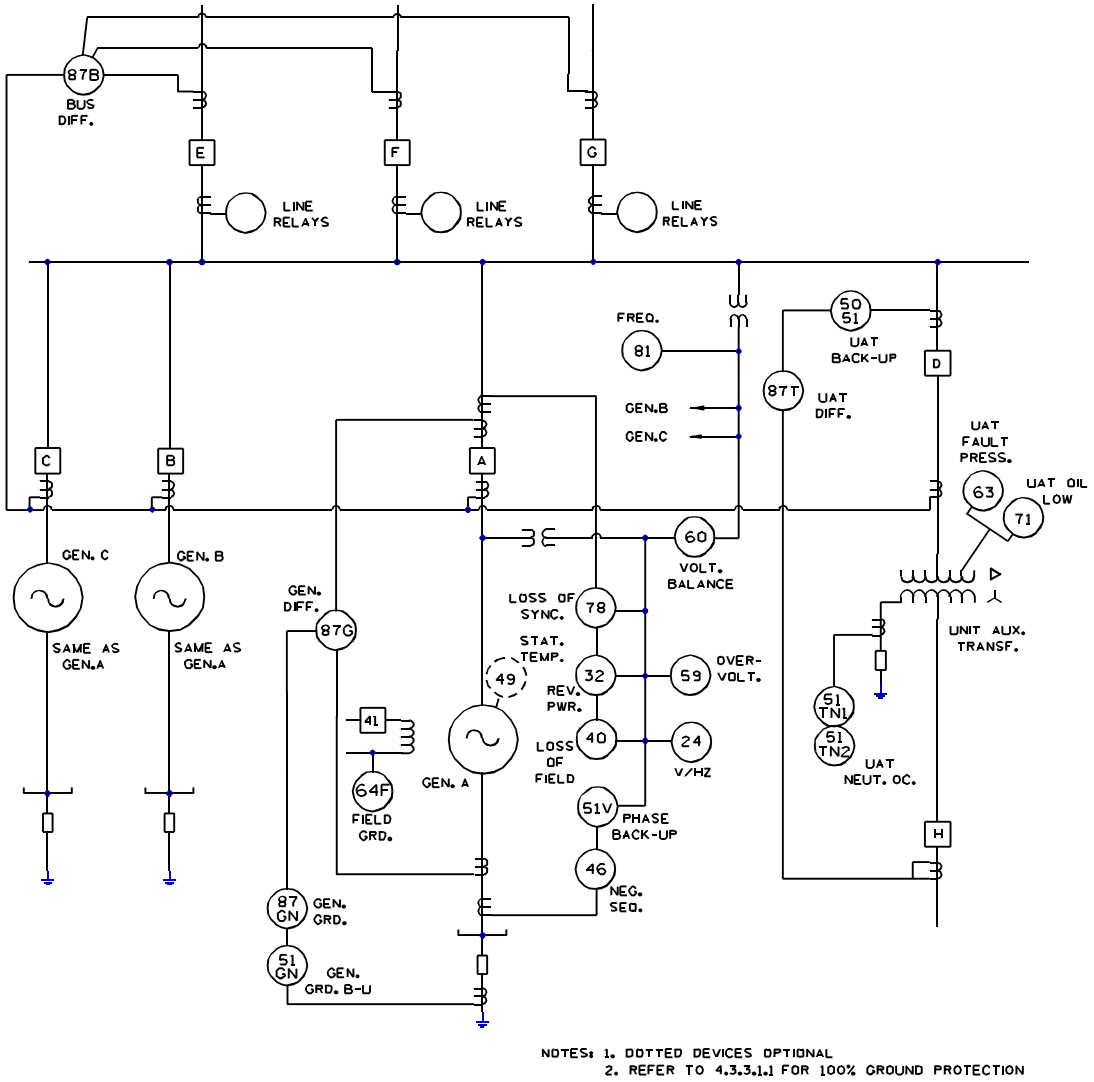

Figure 6-5—Protection for generators connected directly to a distribution system

Copyright The Institute of Electrical and Electronics Engineers, Inc.
Provided by IHS under license with IEEE
No reproduction or networking permitted without license from IHS
Not for Resale

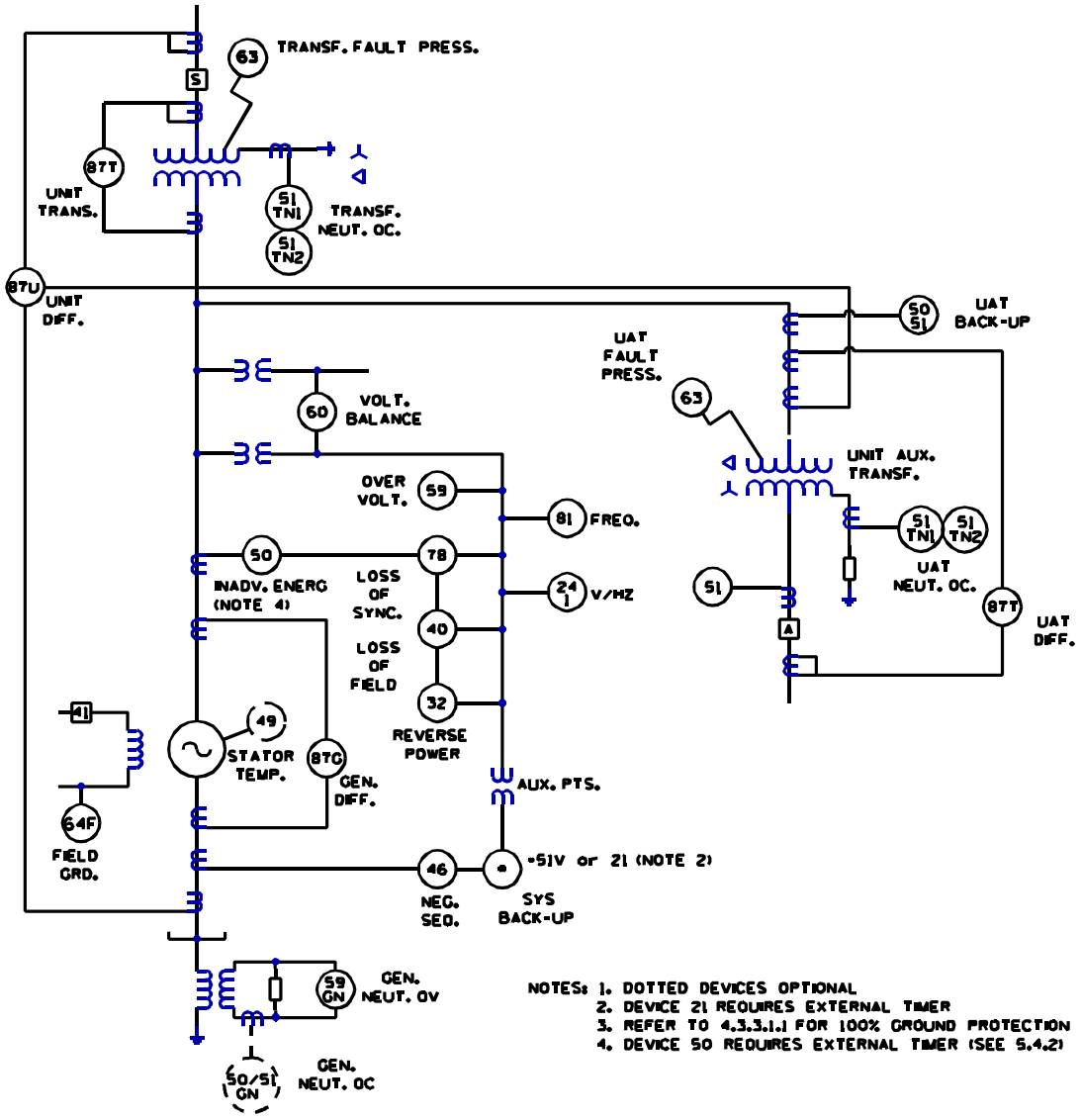

Figure 6-6—Protection for combustion turbine generator

Copyright The Institute of Electrical and Electronics Engineers, Inc.
Provided by IHS under license with IEEE
No reproduction or networking permitted without license from IHS
Not for Resale

Table 6-1—Trip table

Device	Generator Breaker Trip	Field Breaker Trip	Transfer Auxiliaries	Prime Mover Trip	Alarm Only	Subclause Reference
21 or 51V	X					4.6.4
24	X	Note 2	X			4.5.4.5
32	X	X	X	X		4.5.5.6
40	X	X	X			4.5.1.4
46	X					4.5.2.2
49					X	4.1.1
50/51	X	X	X	X		
50/51GN	X	X	X	X		4.3.3.1.2
51TN1	X					4.6.4
51TN2	X	X	X	X		4.6.4
51TN1 UAT	Note 6	Note 6	Note 5	Note 6		
51TN2 UAT	X	X		X		
51 UAT	Note 6	Note 6	Note 5	Note 6		
53		Note 2			X	4.5.4.5
59	Note 1	Note 1			X	4.5.6.1
59GN	X	X	X	X	Note 3	4.3.3.1.2
60					X	5.2.1
63	X	X	X	X		4.9.2.2
63 UAT	X	X	X	X		
64F	Note 4	Note 4			X	4.4.2
71					X	4.9.1
71 UAT					X	
78	X					4.5.3.4
81	X					4.5.7.2
87G	X	X	X	X		4.3.2.7
87T	X	X	X	X		4.3.2.7
87T UAT	X	X	X	X		
87U	X	X	X	X		4.3.2.7

NOTES

1—Device 59 may be connected to trip at hydro units.

2—If generator is off-line, trip only field breaker.

3—Refer to Subclause 4.3.3.1.1 on 100% ground protection.

4—May be connected to trip, per generator manufacturer.

5—Trips unit auxiliary bus incoming breaker (Breaker A, figure 6-1).

6—These trips are required and 51TN2/UAT is not required if tripping of Breaker A results in loss of auxiliaries.

--`,,-`-`,,`,,`,`,,`---

Copyright The Institute of Electrical and Electronics Engineers, Inc.
Provided by IHS under license with IEEE
No reproduction or networking permitted without license from IHS
Not for Resale

Annex A
Bibliography

A.1 General

[B1] Alger, P. L., Franklin, R. F., Kilbourne, C. E., and McClure, J. B., "Short-Circuit Capabilities of Synchronous Machines for Unbalanced Faults," *AIEE Transactions*, vol. 72, pt. III, pp. 394-403, 1953.

[B2] Baker, D. S., "Generator Backup Overcurrent Protection," *IEEE Transactions on Industry Applications*, vol. IA-18, no. 6, pp. 632-640, Nov/Dec 1982.

[B3] Baldwin, M. S., Elmore, W. A., and Bonk, J. J., "Improve Turbine-Generator Protection for Increased Plant Reliability," *IEEE Transactions on Industry Applications*, vol. 99, no. 3, pp. 982-989, May/June 1980.

[B4] Berdy, J., "Protection of Large Tandem Generators," Georgia Institute of Technology Relay Conference, 1972.

[B5] Berdy, J., Brown, P. G., Mathews, C. A., Walker, D. N., and Wilkinson, S. B., "Automatic High Speed Reclosing Near Large Generating Stations," Paper 34-02, CIGRE, 1982.

[B6] Berdy, J., Crenshaw, M. L., and Temoshok, M., "Protection of Large Steam Turbine Generators During Abnormal Conditions," Paper 11.05, CIGRE, 1972.

[B7] Blackburn, J. L., *Protective Relaying; Principles and Applications*, New York: Marcel Dekker, Inc, 1987.

[B8] Breedlove, H. A. and Harbaugh, J. R., "Protection of the Induction Motor/Generator," *IEEE Transaction on Industry Applications*, vol. IA-19, no. 6, pp. 958-961, Nov-Dec 1983.

[B9] Carleton, J. T., Bobo, P. O., and Burt, D. A., "Minimum Excitation Limit For Magnetic Amplifier Regulating System," *AIEE Transactions*, vol. 73, pp. 869-874, Aug 1954.

[B10] Concordia, C., *Synchronous Machines—Theory and Performance*, New York: John Wiley & Sons, 1951.

[B11] Concordia, C. and Temoshok, M., "Resynchronizing of Generators," *AIEE Transactions*, vol. 66, pp. 1512-1518, 1947.

[B12] Dash, P. K., Malik, O. P., and Hope, G. S., "Fast Generator Protection Against Internal Asymmetrical Faults," *IEEE Transactions on Power Apparatus and Systems*, vol. PAS-96, no. 5, pp. 1498-1506, Sep-Oct 1977.

[B13] Elmore, W. A., ed., *Protective Relaying, Theory and Applications*, New York: Marcel Dekker, Inc, 1994.

[B14] GEC Measurements, *Protective Relays Application Guide Book*, 1975.

Copyright The Institute of Electrical and Electronics Engineers, Inc.
Provided by IHS under license with IEEE
No reproduction or networking permitted without license from IHS Not for Resale

[B15] Griffith, M. Shan, "Modern A-C Generator Control Systems: Some Plain and Painless Facts," *IEEE Transactions on Industry Applications*, vol. IA14, no. 6, pp. 481-491, Nov/Dec 1978.

[B16] Gross, E. T. B. and LeVesconte, L. B., "Backup Protection for Generators," *AIEE Transactions*, vol. 72, pt. III-A, pp. 585-589, June 1953.

[B17] Higgins, T. A., Holly, H. J., and Wall, L. A., "Generator Representation and Characteristics For Three Phase Faults," Georgia Institute of Technology Relay Conference, 1989.

[B18] IEEE C37.91-1985, IEEE Guide for Protective Relay Applications to Power Transformers (ANSI).

[B19] IEEE Committee Report, "Potential Transformer Application on Unit-Connected Generators," *IEEE Transactions on Power Apparatus and Systems*, vol. 91, pp. 24-28, Jan/Feb 1972.

[B20] IEEE Committee Report, "Readers Guide to Subsynchronous Resonance," *IEEE Transactions on Power Apparatus and Systems*, vol.7, pp.150-156, Feb 1992.

[B21] IEEE Power System Committee Report, "A Survey of Generator Back-up Protection Practices," *IEEE Transactions on Power Delivery*, vol. 5, no. 2, pp. 575-584, April 1990.

[B22] IEEE Power System Relaying Committee Report, "Automatic Reclosing of Transmission Lines," *IEEE Transactions on Power Apparatus and Systems*, vol. PAS-103, no. 2, pp. 234-245, Feb 1984.

[B23] IEEE Power System Committee Report, "Impact of EHV Transmission on Generator Protection," *IEEE Transaction on Power Delivery*, vol. 8, no. 3, pp. 962-971, July 1993.

[B24] Mason, C. R., *The Art and Science of Protective Relaying*, New York: Wiley, 1956.

[B25] McConnell, H. M., "Transductor-Type Field Ripple Detector for Synchronous Generators," *AIEE Transactions*, vol. 74, pt. III, pp. 476-79, June 1955.

[B26] Pope, J. W., "Parallel Operation of Customer Generation," *IEEE Transactions on Industry Applications*, vol. IA-19, no. 1, pp. 32-36, Jan/Feb 1983.

[B27] Power System Relaying Committee, "Relay Protection of A-C Generators," *AIEE Transactions*, vol. 70, pt. 1, pp. 275-281, 1951.

[B28] Schmitt, N. and Winchester, R. L., "Today's Large Generators Design, Performance and Operation," *IEEE Transactions on Power Apparatus and Systems*, vol. PAS-94, no. 6, pp. 2115-2123, Nov-Dec 1975.

[B29] Sills, H. R. and McKeever, J. L., "Characteristics of Split-Phase Currents As a Source of Generator Protection," *AIEE Transactions*, vol. 72, pt. III, pp. 1005-1013, 1953.

[B30] Tice, J. B. and Bowler, C. E. J. "Control of the Phenomenon of Sub-Synchronous Resonance," American Power Conference, Chicago, IL, April 21-23, 1975.

[B31] Warrington, A. R. and Van, C., *Protective Relays, Their Theory and Practice*, London: Chapman and Hall, Ltd, 1968.

[B32] Zocholl, S. E. and Waldron, J. E., "Solid-State Relays for Generator Protection," Western Protective Relay Conference-Washington State University, Oct 16-18, 1979.

--`,,`-`-`,,`,,`,`,,`---
Copyright The Institute of Electrical and Electronics Engineers, Inc.
Provided by IHS under license with IEEE
No reproduction or networking permitted without license from IHS Not for Resale

A.2 Loss of field

[B33] Arndt, C. R. and Rogers, M., "A Study of Loss-of-Excitation Relaying and Stability of a 595 MVA Generator on the Detroit Edison System," *IEEE Transactions on Power Apparatus and Systems*, vol. PAS-94, no. 5, pp. 1449-1456, Sep/Oct 1975.

[B34] Berdy, J., "Loss of Excitation Protection for Modern Synchronous Generators," *IEEE Transactions on Power Apparatus and Systems*, vol. PAS-94, no. 5, pp. 1457-1463, Sep/Oct 1975.

[B35] Crossman, G. C., Lindemuth, H. F., and Webb, R. L., "Loss-of-Field Protection for Generators," *AIEE Transactions*, vol. 61, pp. 261-266, 1942.

[B36] Darron, H. G., Koepfinger, J. L., Mather, J. R., and Rusche, P., "The Influence of Generator Loss of Excitation on Bulk Power System Reliability," *IEEE Transactions on Power Apparatus and Systems*, vol. PAS-94, no. 5, pp. 1473-1478, Sep/Oct 1975.

[B37] Gibson, W. P. and Wagner, C. L., "Application of Loss-of-Field Relays on Cross Compound Generators," PEA Relay Committee Meeting, Harrisburg, PA, Oct 24, 1969.

[B38] Higgins, D. D. and Wild, E., "Re-establishing Excitation of a Loaded Alternator in Parallel With Others," *AIEE Transactions*, vol. 50, pp. 1194-1200, Dec 1931.

[B39] Mason, C. R., "A New Loss of Excitation Relay For Synchronous Generators," *AIEE Transactions*, vol. 68, pp. 1240-1245, 1949.

[B40] Power System Relaying Committee, "Loss-of-Field Relay Operation During System Disturbances," *IEEE Transactions on Power Apparatus and Systems*, vol. PAS-94, no. 5, pp. 1464-1472, Sep/Oct 1975.

[B41] Tremaine, R. L. and Blackburn, J. L., "Loss-of-Field Protection for Synchronous Machines," *AIEE Transactions*, vol. 73, pt. III A, pp. 765-77, Aug 1954.

A.3 Grounding and ground protection

[B42] AIEE Committee Report, "Application Guide for the Grounding of Synchronous Generator Systems," *AIEE Transactions on Power Apparatus and Systems*, vol. 72, pt. III, pp. 517-530, 1953.

[B43] AIEE Committee Report, "Present Day Grounding Practices on Power Systems, Part I: Grounding Practices at Generating Stations," *AIEE Transactions*, vol. 66, pp. 1525-37 and 1548-51, 1947.

[B44] Barkle, J. E., Sterrett, C. C., and Fountain, L. L., "Detection of Grounds in Generator Field Windings," *AIEE Transactions*, 74, pt. III, pp. 467-470, 1955.

[B45] Brown, P. G., Johnson, I. E., and Stevenson, J. R., "Generator Neutral Grounding," *IEEE Transactions on Power Apparatus and Systems*, vol. PAS 97, no. 3, pp. 683-684, May/June 1978.

[B46] Greenwood, A., *Electrical Transients in Power Systems*, John Wiley & Sons, pp.87-89, 1971.

[B47] Griffin, C. H. and Pope, J. W., "Generator Ground Fault Protection Using Overcurrent, Overvoltage and Undervoltage Relays," *IEEE Transactions on Power Apparatus and Systems*, vol. PAS-101, no. 12, pp. 4490-4501, Dec 1982.

Copyright The Institute of Electrical and Electronics Engineers, Inc.
Provided by IHS under license with IEEE
No reproduction or networking permitted without license from IHS Not for Resale

[B48] Gross, E. T. B., "Sensitive Ground Relaying of A-C Generators," *AIEE Transactions*, vol. 71, pt. III, pp. 539-544, (TP51-371), Apr 1952.

[B49] Gross, E. T. B. and Atherton, E. W., "Application of Resonant Grounding in U.S.," *AIEE Transactions*, vol. 70, pt. I, pp. 389-397, 1951.

[B50] Gulachenski, E. M. and Courville, E. W., "New England Electrics' 39 Years of Experience with Resonant Neutral Grounding of Unit Connected Generators," *IEEE Transactions on Power Delivery*, vol. 6, pp. 1016-1024, July 1991.

[B51] IEEE Std 32-1972 (Reaff. 1991), IEEE Standard Requirements, Terminology and Test Procedure for Neutral Grounding Devices (ANSI).

[B52] Khunkhun, K. J. S., Koepfinger, J. L., and Haddad, Michael V., "Resonant Grounding (Ground Fault Neutralizer) of a Unit Connected Generator," *IEEE Transactions on Power Apparatus and Systems*, vol. PAS-96, no. 2, pp. 550-559, Mar-Apr 1977.

[B53] McFadden, R. H., "Grounding of Generators Connected to Industrial Plant Distribution Buses," *IEEE Transactions on Industry Applications*, vol. IA-17, no. 6, pp. 553-556, Nov/Dec 1981.

[B54] Peterson, H. A., Transients in Power Systems, New York: Dover, p. 279, 1951.

[B55] Pope, J. W., "A Comparison of 100% Stator Ground Fault Protection Schemes," *IEEE Transactions on Power Apparatus and Systems*, vol. PAS 103, pp. 832-840, 1984.

[B56] Rajk, M. N., "Ground Fault Protection of Unit Connected Generators," *AIEE Transactions*, vol. 77, pt. III, pp. 1082-1093, Dec 1958.

[B57] Tomlinson, H. R., "Ground-Fault Neutralizer Grounding of Unit-Connected Generators," *AIEE Transactions*, vol. 72, pt. III, pp. 953-961, Oct 1953.

A.4 Generator differential protection

[B58] McConnell, A. J., "A New Generator Differential Relay," *AIEE Transactions*, vol. 62, pp. 11-13, 1943.

[B59] Sachdev, M. S. and Wind, D. W., "Generator Differential Protection Using A Hybrid Computer," *IEEE Transactions on Power Apparatus and Systems*, vol. PAS-92, no. 6, pp. 2063-2072, Nov-Dec 1973.

[B60] Sonnemann, W. K., "A High Speed Differential Relay For Generator Protection," *AIEE Transactions*, vol. 59, pp. 608-612, 1940.

A.5 Protection of plant auxiliaries

[B61] AEEE Relay Committee Report, "Protection of Power House Auxiliaries," *AIEE Transactions*, vol. 65, pp. 746-751, 1940.

[B62] Griffin, C. H., "Relay Protection of Generator Station Service Transformers," *IEEE Transactions on Power Apparatus and Systems*, vol. PAS 101, pp. 2780-2789, 1982.

Copyright The Institute of Electrical and Electronics Engineers, Inc.
Provided by IHS under license with IEEE
No reproduction or networking permitted without license from IHS
Not for Resale

[B63] Power Generation Committee, “Minimum Recommended Protection, Interlocking and Control for Fossil Fuel Unit-Connected Steam Station,” *IEEE Transactions on Power Apparatus and Systems*, vol. 92, 1973.
Part I—Overall Protection—pp. 374-380
Part II—Plant Auxiliaries, Circulating Water, Service Water, and Condensate and Feedwater—pp. 380-386
Part III—Boiler Water Systems—pp. 386-391
Part IV—Air and Fuel Systems—pp. 392-396
Part V—Turbine-Generator System—pp. 396-399
Jan/June 1973.[B62]

A.6 Generator Stability

[B64] Berdy, J., “Out of Step Protection for Generators,” Georgia Institute of Technology Relay Conference, 1976.

[B65] IEEE Committee Report, “Out of Step Relaying for Generators,” *IEEE Transactions on Power Apparatus and Systems*, vol. 96, pp. 1556-1564, Sept/Oct 1977.

[B66] McFadden, R. H., “Stability Considerations For Industrial Power Systems,” *IEEE Transactions on Industry Applications*, vol. IA-13, no. 2, pp. 107-115, Mar/Apr 1977.

[B67] Michelson, E. L. and Lischer, L. F., “Generator Stability at Low Excitation,” *AIEE Transactions*, vol. 67, pp. 1-9, AIEE Technical Paper 48-2, 1948.

A.7 Under and over excitation of generators

[B68] Adams, C. G. and McClure, J. B., “Underexcited Operation of Turbo-Generators,” *AIEE Transactions*, vol. 67, pp. 521-528, 1948.

[B69] Dillman, T. L., Keay, F. W., Raczkowski, C., Skooglund, J. W. and South, W. H., “Brushless Excitation,” *IEEE Spectrum*, pp. 58-66, Mar 1972.

[B70] Farnham, S. B. and Swarthout, R. W., “Field Excitation in Relation to Machine and System Operation,” *AIEE Transactions*, vol. 72, pt. III, pp. 1215-1223, Dec 1953.

[B71] Estcourt, V. F., Holley, Ch.H., Johnson, W. R., and Light, P. H., “Underexcited Operation of Large Turbine Generators of Pacific Gas and Electric Company’s System,” *AIEE Transactions*, vol. 72, pt. III, pp. 16-22, Feb 1953.

[B72] Bobo, P. O., Skooglund J. W., and Wagner, C. L., “Performance of Excitation Systems Under Abnormal Conditions,” *IEEE Transactions on Power Apparatus and Systems*, vol. PAS-87, no. 2, pp. 547-553, Feb 1968.

A.8 Distance Relay protection on generators

[B73] Clarke, E., “Impedance Seen by Relays During Power Swings With and Without Faults,” *AIEE Transactions*, vol. 64, pp. 372-384, 1945.

[B74] Warrington, A. R. and Van, C., “Graphical Method for Estimating the Performance of Distance Relays During Faults and Power Swings,” *AIEE Transaction*, vol. 68, pt. I, pp. 608-621, 1949.

Copyright The Institute of Electrical and Electronics Engineers, Inc.
Provided by IHS under license with IEEE
No reproduction or networking permitted without license from IHS Not for Resale

A.9 Protection for unbalanced currents

[B75] Barkle, J. E. and Glassburn, W. E., "Protection of Generators Against Unbalanced Currents," *AIEE Transactions*, vol. 72, pt. III, pp. 282-285, Apr 1953.

[B76] Barkle, J. E. and Von Roeschlaub, F., "Application of Relays for Unbalanced Faults on Generators, Part III," *AIEE Transactions*, vol. 72, pp. 277-281, 1953.

[B77] Berdy, J. and Brown, P. G., "Protection of Synchronous Generators During Unbalanced System Conditions," Georgia Institute of Technology Relay Conference, 1975.

[B78] Graham, D. J., Brown, P. G., and Winchester, R. L., "Generator Protection With A New Static Negative Sequence Relay," *IEEE Transactions on Power Apparatus and Systems*, vol. PAS-94, no. 4, pp. 1208-1213, Jul/Aug 1975.

[B79] Lawrence, R. F. and Ferguson, R. W., "Generator Negative-Sequence Currents for Line-to-Line Faults, Part III," *AIEE Transactions*, vol. 72, pp. 9-16, 1953.

[B80] Morris, W. C. and Goff, L. E., "A Negative-Phase Sequence-Overcurrent Relay for Generator Protection, Part III," *AIEE Transactions*, vol. 72, pp. 615-618, 1953.

[B81] Pollard, E. I., "Effects of Negative Sequence Currents on Turbine-Generator Rotors, Part III," *AIEE Transactions*, vol. 72, pp. 404-406, 1953.

A.10 Temperature protection

[B82] Alger, J. R. M., Kilbourne, C. E., and Snell, D. S., "Turbine Generator Stator Winding Temperatures at Various Hydrogen Pressures, Part III," *AIEE Transactions*, vol. 74, pp. 232-250, 1955.

[B83] Jerrard, R. P., "Temperature Drop to Resistance Temperature Detector in Stator Windings of Turbine Generators, Part III," *AIEE Transactions*, vol. 73, pp. 665-669, 1954.

[B84] Ross, M. D. and King, E. I., "Turbine Generator Rotor Heating During Single Phase Short Circuits, Part III," *AIEE Transactions*, vol. 72, pp. 40-45, 1953.

[B85] "Symposium on the Effect of Low Frequency and Low Voltage on Thermal Plant Capability and Load Relief during Power System Emergencies, Part III," *AIEE Transactions*, vol. 73, pp. 1628-1668, 1954.

A.11 Vibration protection

[B86] Webb, R. L. and Murray, C. S., "Vibration Protection for Rotating Machinery," *AIEE Transactions*, vol. 63, pp. 534-537, 1944.

A.12 Open breaker flashover protection

[B87] Detjen, E. R., "Some Additional Thoughts on Generator Protection," Pennsylvania Electric Association Relay Committee, May 1981.

[B88] IEEE Committee Report, "Inadvertent Energizing Protection of Synchronous Generators," *IEEE Transactions on Power Delivery*, vol. 4, no. 2, pp. 965-977, April 1989.

[B89] Wagner, C. L. Elmore, W. A., "Pole Disagreement Relaying," Western Protective Relay Conference, 1983.

--`,,`-`-`,,`,,`,`,,`---
Copyright The Institute of Electrical and Electronics Engineers, Inc.
Provided by IHS under license with IEEE
No reproduction or networking permitted without license from IHS
Not for Resale