C37.012™



IEEE Application Guide for Capacitance Current Switching for AC High-Voltage Circuit Breakers

IEEE Power Engineering Society

Sponsored by the
Switchgear Committee

IEEE
3 Park Avenue
New York, NY 10016-5997, USA

9 December 2005

IEEE Std C37.012™-2005
(Revision of
IEEE Std C37.012-1979)

Copyright The Institute of Electrical and Electronics Engineers, Inc.
Provided by IHS under license with IEEE
No reproduction or networking permitted without license from IHS

Not for Resale

--`,,```,,,,````-`-`,,`,,`,`,,`---
and Electronics Engineers, Inc.
IEEE
nitted without license from IHS
Not for Resale

Recognized as an
American National Standard (ANSI)

IEEE Std C37.012™-2005
(Revision of
IEEE Std C37.012-1979)

IEEE Application Guide for Capacitance Current Switching for AC High-Voltage Circuit Breakers

Sponsor

Switchgear Committee
of the
IEEE Power Engineering Society

Approved 28 October 2005

American National Standards Institute

Approved 9 June 2005

IEEE-SA Standards Board

Abstract: Guidance for the application of ac high-voltage circuit breakers for capacitance current switching is provided. The application guide addresses the general theory of capacitance current switching; and the notions of restrike, reignition, non-sustained disruptive discharge (NSDD), and voltage factors are explained. Application of circuit breakers for different network conditions and different capacitive loads (lines, cables, capacitor and filter banks) is treated.
Keywords: ac high-voltage circuit breakers, application, capacitance current switching, inrush currents, non-sustained disruptive discharge, restrike, reignition, NSDD, overvoltages

---

The Institute of Electrical and Electronics Engineers, Inc.
3 Park Avenue, New York, NY 10016-5997, USA

Copyright © 2005 by the Institute of Electrical and Electronics Engineers, Inc.
All rights reserved. Published 9 December 2005. Printed in the United States of America.

IEEE is a registered trademark in the U.S. Patent & Trademark Office, owned by the Institute of Electrical and Electronics Engineers, Incorporated.

Print: ISBN 0-7381-4748-6 SH95352
PDF: ISBN 0-7381-4749-4 SS95352

No part of this publication may be reproduced in any form, in an electronic retrieval system or otherwise, without the prior written permission of the publisher.

--`,,```,,,,````-`-`,,`,,`,`,,`---

Copyright The Institute of Electrical and Electronics Engineers, Inc.
Provided by IHS under license with IEEE
No reproduction or networking permitted without license from IHS Not for Resale

IEEE Standards documents are developed within the IEEE Societies and the Standards Coordinating Committees of the IEEE Standards Association (IEEE-SA) Standards Board. The IEEE develops its standards through a consensus development process, approved by the American National Standards Institute, which brings together volunteers representing varied viewpoints and interests to achieve the final product. Volunteers are not necessarily members of the Institute and serve without compensation. While the IEEE administers the process and establishes rules to promote fairness in the consensus development process, the IEEE does not independently evaluate, test, or verify the accuracy of any of the information contained in its standards.

Use of an IEEE Standard is wholly voluntary. The IEEE disclaims liability for any personal injury, property or other damage, of any nature whatsoever, whether special, indirect, consequential, or compensatory, directly or indirectly resulting from the publication, use of, or reliance upon this, or any other IEEE Standard document.

The IEEE does not warrant or represent the accuracy or content of the material contained herein, and expressly disclaims any express or implied warranty, including any implied warranty of merchantability or fitness for a specific purpose, or that the use of the material contained herein is free from patent infringement. IEEE Standards documents are supplied "**AS IS**."

The existence of an IEEE Standard does not imply that there are no other ways to produce, test, measure, purchase, market, or provide other goods and services related to the scope of the IEEE Standard. Furthermore, the viewpoint expressed at the time a standard is approved and issued is subject to change brought about through developments in the state of the art and comments received from users of the standard. Every IEEE Standard is subjected to review at least every five years for revision or reaffirmation. When a document is more than five years old and has not been reaffirmed, it is reasonable to conclude that its contents, although still of some value, do not wholly reflect the present state of the art. Users are cautioned to check to determine that they have the latest edition of any IEEE Standard.

In publishing and making this document available, the IEEE is not suggesting or rendering professional or other services for, or on behalf of, any person or entity. Nor is the IEEE undertaking to perform any duty owed by any other person or entity to another. Any person utilizing this, and any other IEEE Standards document, should rely upon the advice of a competent professional in determining the exercise of reasonable care in any given circumstances.

Interpretations: Occasionally questions may arise regarding the meaning of portions of standards as they relate to specific applications. When the need for interpretations is brought to the attention of IEEE, the Institute will initiate action to prepare appropriate responses. Since IEEE Standards represent a consensus of concerned interests, it is important to ensure that any interpretation has also received the concurrence of a balance of interests. For this reason, IEEE and the members of its societies and Standards Coordinating Committees are not able to provide an instant response to interpretation requests except in those cases where the matter has previously received formal consideration. At lectures, symposia, seminars, or educational courses, an individual presenting information on IEEE standards shall make it clear that his or her views should be considered the personal views of that individual rather than the formal position, explanation, or interpretation of the IEEE.

Comments for revision of IEEE Standards are welcome from any interested party, regardless of membership affiliation with IEEE. Suggestions for changes in documents should be in the form of a proposed change of text, together with appropriate supporting comments. Comments on standards and requests for interpretations should be addressed to:

Secretary, IEEE-SA Standards Board

445 Hoes Lane

Piscataway, NJ 08854

USA

NOTE—Attention is called to the possibility that implementation of this standard may require use of subject matter covered by patent rights. By publication of this standard, no position is taken with respect to the existence or validity of any patent rights in connection therewith. The IEEE shall not be responsible for identifying patents for which a license may be required by an IEEE standard or for conducting inquiries into the legal validity or scope of those patents that are brought to its attention.

Authorization to photocopy portions of any individual standard for internal or personal use is granted by the Institute of Electrical and Electronics Engineers, Inc., provided that the appropriate fee is paid to Copyright Clearance Center. To arrange for payment of licensing fee, please contact Copyright Clearance Center, Customer Service, 222 Rosewood Drive, Danvers, MA 01923 USA; +1 978 750 8400. Permission to photocopy portions of any individual standard for educational classroom use can also be obtained through the Copyright Clearance Center.

Copyright The Institute of Electrical and Electronics Engineers, Inc.
Provided by IHS under license with IEEE
No reproduction or networking permitted without license from IHS Not for Resale

Introduction

This introduction is not part of IEEE Std C37.012-2005, IEEE Application Guide for Capacitance Current Switching for AC High-Voltage Circuit Breakers.

This application guide is a revision of IEEE Std C37.012-1979. This revision reflects the changes made to the capacitive current switching requirements and test procedures stated in IEEE Std C37.04a™[a] and IEEE Std C37.09™.

Notice to users

Errata

Errata, if any, for this and all other standards can be accessed at the following URL: http://standards.ieee.org/reading/ieee/updates/errata/index.html. Users are encouraged to check this URL for errata periodically.

Interpretations

Current interpretations can be accessed at the following URL: http://standards.ieee.org/reading/ieee/interp/index.html.

Patents

Attention is called to the possibility that implementation of this application guide may require use of subject matter covered by patent rights. By publication of this application guide, no position is taken with respect to the existence or validity of any patent rights in connection therewith. The IEEE shall not be responsible for identifying patents or patent applications for which a license may be required to implement an IEEE standard or for conducting inquiries into the legal validity or scope of those patents that are brought to its attention.

Participants

This application guide was developed by the High-Voltage Circuit Breaker Subcommittee of the IEEE Power Engineering Society (PES) Switchgear Committee. The following is a list of the participants in the Revision of C37.012 Working Group at the time this application guide was completed:

Anne Bosma, *Chair*

R. W. Alexander
B. J. Behl
W. J. Bergman
Denis Dufournet
K. Edwards
Leslie Falkingham
T. E. Field
R. Garzon
Mietek Glinkowski
C. Hampe
Franco Lo Monaco
R. W. Long
Antonio Mannarino
G. F. Montillet
Y. I. Musa
J. Nelson
E. J. O'Donnell
H. Melvin Smith
R. Kirkland Smith
C. L. Wagner

[a]Information on references can be found in Clause 2.

Copyright © 2005 IEEE. All rights reserved.

Copyright The Institute of Electrical and Electronics Engineers, Inc.
Provided by IHS under license with IEEE
No reproduction or networking permitted without license from IHS
Not for Resale

The following members of the individual balloting committee voted on this application guide. Balloters may have voted for approval, disapproval, or abstention.

Roy W. Alexander
Marcos Andrade
Edwin Averill
Behdad Biglar
Wallace Binder
Anne Bosma
Lyne Brisson
Steven Brown
Chih Chow
Tommy Cooper
R. Daubert
Matthew Davis
Guru Dutt Dhingra
Jerome DiSciullo
Denis Dufournet
Doug Edwards
Amir El-Sheikh
Gary Engmann
Leslie Falkingham
Rabiz Foda
Marcel Fortin
Harry Gianakouros
Mietek Glinkowski
Keith Gray
Randall Groves
Erik Guillot
Kenneth Hanus
John E. Harder
Ian Harvey
Edward Horgan, Jr.
David Jackson
Richard Jackson
Robert Jeanjean
Joseph L. Koepfinger
Alan Kollar
Stephen R. Lambert
Thomas LaRose
John Leach
Jason Lin
Franco Lo Monaco
R. W. Long
Gregory Luri
Antonio Mannarino
Peter Meyer
G. Michel
Georges Montillet
Charles Morse
Yasin Musa
Art Neubauer
T. W. Olsen
Miklos Orosz
David Peelo
Tony Picagli
Johannes Rickmann
Michael Roberts
Surya Santoso
Devki Sharma
H. Jin Sim
H. Melvin Smith
James E. Smith
R. Kirkland Smith
Rao Sunkara
Stanton Telander
Norbert Trapp
Charles Wagner
Tom Wandeloski
James Wilson
Jan Zawadzki

When the IEEE-SA Standards Board approved this application guide on 9 June 2005, it had the following membership:

Steve M. Mills, *Chair*
Richard H. Hulett, *Vice Chair*
Judith Gorman, *Secretary*

Mark D. Bowman
Dennis B. Brophy
Joseph Bruder
Richard Cox
Bob Davis
Julian Forster*
Joanna N. Guenin
Mark S. Halpin
Raymond Hapeman
William B. Hopf
Lowell G. Johnson
Herman Koch
Joseph L. Koepfinger*
David J. Law
Daleep C. Mohla
Paul Nikolich
T. W. Olsen
Glenn Parsons
Ronald C. Petersen
Gary S. Robinson
Frank Stone
Malcolm V. Thaden
Richard L. Townsend
Joe D. Watson
Howard L. Wolfman

*Member Emeritus

Also included are the following nonvoting IEEE-SA Standards Board liaisons:

Satish K. Aggarwal, *NRC Representative*
Richard DeBlasio, *DOE Representative*
Alan H. Cookson, *NIST Representative*

Don Messina
IEEE Standards Project Editor

--`,,```,,,,````-`-`,,`,,`,`,,`---

Copyright © 2005 IEEE. All rights reserved.

Copyright The Institute of Electrical and Electronics Engineers, Inc.
Provided by IHS under license with IEEE
No reproduction or networking permitted without license from IHS
Not for Resale

Contents

1. Overview 1

1.1 Scope 1
1.2 Purpose 1

2. Normative references 1

3. General 2

4. General theory of capacitive current switching 3

4.1 De-energization of capacitive loads 3
4.1.1 Capacitor banks 3
4.1.2 No-load cables 6
4.1.3 No-load overhead lines 8
4.1.4 Voltage factors for capacitive current switching tests 11
4.2 Energization of capacitive loads 13
4.2.1 Capacitor banks 14
4.2.2 Cables 18
4.2.3 Energization and re-energization of overhead lines 24

5. General application considerations 26

6. Capacitance current switching application considerations 26

6.1 Maximum voltage for application 26
6.2 Frequency 26
6.3 Rated capacitive current 26
6.3.1 Overhead lines and cables 26
6.3.2 Capacitor and filter banks 27
6.4 Voltage and grounding conditions of the network 27
6.5 Restrike performance 28
6.6 Class of circuit breaker 28
6.7 Interrupting time 29
6.8 Transient overvoltages and overvoltage limitation 29
6.8.1 Overvoltages 29
6.8.2 Overvoltage limitation 30
6.9 No-load overhead lines 30
6.9.1 Line charging current 30
6.9.2 Compensated overhead lines 32
6.9.3 No-load line recovery voltage 32
6.10 Capacitor banks 32
6.10.1 Capacitor bank current 32
6.10.2 Methods for calculating transient inrush currents 33
6.11 Cables 38
6.11.1 Cable inrush current 38
6.11.2 Alternate configurations 38
6.12 Switching through transformers 39
6.13 Unusual circuits 40
6.13.1 Exposure to transient inrush currents 41
6.13.2 Exposure to total capacitor bank discharge current 41
6.13.3 Exposure to capacitive switching duties during fault switching 43

Copyright © 2005 IEEE. All rights reserved.

Copyright The Institute of Electrical and Electronics Engineers, Inc.
Provided by IHS under license with IEEE
No reproduction or networking permitted without license from IHS
Not for Resale

6.14 Effect of load 43
6.15 Effect of reclosing 43
6.16 Resistor thermal limitations 44
6.17 Application considerations for different circuit breaker types 44
6.17.1 Oil circuit breakers 44
6.17.2 Vacuum circuit breakers 45
6.17.3 Sulfur hexafluoride (SF6) circuit breakers 45
6.17.4 Air-blast circuit breakers 46

7. Considerations of capacitive currents and recovery voltages under fault conditions 46

7.1 Voltage and current factors 46
7.2 Reasons for these specific tests being non-mandatory in the standard 46
7.3 Contribution of a capacitor bank to a fault 47
7.4 Switching overhead lines under faulted conditions 47
7.5 Switching capacitor banks under faulted conditions 48
7.5.1 Reference condition 49
7.5.2 Fault to neutral in one phase (one capacitor bank phase short-circuited) 49
7.5.3 Fault to ground in one phase 50
7.5.4 Other fault cases 50
7.6 Switching cables under faulted conditions 50
7.7 Examples of application alternatives 50

Annex A (informative) Bibliography 51

Copyright © 2005 IEEE. All rights reserved.

Copyright The Institute of Electrical and Electronics Engineers, Inc.
Provided by IHS under license with IEEE
No reproduction or networking permitted without license from IHS
Not for Resale

Figures

Figure 1—Single-phase equivalent circuit for capacitive current interruption 3
Figure 2—Voltage and current shapes at capacitive current interruption 4
Figure 3—Voltage and current wave shapes in the case of a restrike 5
Figure 4—Theoretical maximum voltage buildup by successive restrikes 5
Figure 5—Recovery voltage of the first pole-to-clear at interruption of a three-phase ungrounded capacitive load 6
Figure 6—Cross section of a high-voltage cable 7
Figure 7—Screened cable with equivalent circuit 8
Figure 8—Belted cable with equivalent circuit 8
Figure 9—Recovery voltage peak in the first pole-to-clear as a function of C1/C0, delayed interruption of the second phase 9
Figure 10—Typical current and voltage relations for a compensated line 10
Figure 11—Half cycle of recovery voltage 11
Figure 12—Recovery voltage on first pole-to-clear for three-phase interruption: capacitor bank with isolated neutral (50 Hz) 13
Figure 13—Parallel capacitor banks 15
Figure 14—Typical circuit for back-to-back switching 20
Figure 15—Equivalent circuit for back-to-back cable switching 22
Figure 16—Bank-to-cable switching circuit 23
Figure 17—Equivalent bank-to-cable switching circuit 23
Figure 18—Energization of no-load lines: basic phenomena 25
Figure 19—Pre-insertion resistors and their function 25
Figure 20—Example of the recovery voltage across a filter bank circuit breaker 27
Figure 21—RMS charging current versus system voltage for different line configurations at 60 Hz 31
Figure 22—Typical circuit for back-to-back switching 34
Figure 23—Example of 115 kV system 36
Figure 24—Voltage and current relations for capacitor switching through interposed transformer 40
Figure 25—Station illustrating large transient inrush currents through circuit breakers from parallel capacitor banks 42
Figure 26—Fault in the vicinity of a capacitor bank 47
Figure 27—Recovery voltage and current for first pole-to-clear when faulted phase is the second pole-to-clear 48
Figure 28—Reference condition 49

Copyright © 2005 IEEE. All rights reserved.

Copyright The Institute of Electrical and Electronics Engineers, Inc.
Provided by IHS under license with IEEE
No reproduction or networking permitted without license from IHS
Not for Resale

Tables

Table 1—Voltage factors for single-phase capacitive current switching tests 12
Table 2—Inrush current and frequency for switching capacitor banks 33
Table 3—Typical values of inductance between capacitor banks 35
Table 4—Frequency and current amplitude relations 39

Copyright © 2005 IEEE. All rights reserved.

Copyright The Institute of Electrical and Electronics Engineers, Inc.
Provided by IHS under license with IEEE
No reproduction or networking permitted without license from IHS

Not for Resale

IEEE Application Guide for Capacitance Current Switching for AC High-Voltage Circuit Breakers

1. Overview

1.1 Scope

This application guide for capacitance current switching applies to ac high-voltage circuit breakers rated in accordance with IEEE Std C37.04™[1] and listed in ANSI Std C37.06. It is intended to supplement IEEE Std C37.010™. Circuit breakers rated and manufactured to meet other standards should be applied in accordance with application procedures adapted to their specific ratings.

1.2 Purpose

This guide is intended for general use in the application of circuit breakers for capacitance current switching. Familiarity with other American National Standards applying to circuit breakers is assumed, and provisions of those standards are indicated in this guide only when necessary for clarity in describing application requirements.

2. Normative references

The following referenced documents are indispensable for the application of this application guide. For dated references, only the edition cited applies. For undated references, the latest edition of the referenced document (including any amendments or corrigenda) applies.

ANSI Std C37.06, American National Standard for AC High-Voltage Circuit Breakers Rated on a Symmetrical Current Basis – Preferred Ratings and Related Required Capabilities.[2]

[1]Information on references can be found in Clause 2.

[2]ANSI publications are available from the Sales Department, American National Standards Institute, 25 West 43rd Street, 4th Floor, New York, NY 10036, USA (http://www.ansi.org/).

--`,,```,,,,````-`-`,,`,,`,`,,`---

Copyright © 2005 IEEE. All rights reserved.

Copyright The Institute of Electrical and Electronics Engineers, Inc.
Provided by IHS under license with IEEE
No reproduction or networking permitted without license from IHS

Not for Resale

IEEE Std C37.04™, IEEE Standard Rating Structure for AC High-Voltage Circuit Breakers Rated on a Symmetrical Current Basis.[3, 4]

IEEE Std C37.09™, IEEE Standard Test Procedure for AC High-Voltage Circuit Breakers Rated on a Symmetrical Current Basis.

IEEE Std C37.010™, IEEE Application Guide for AC High-Voltage Circuit Breakers Rated on a Symmetrical Current Basis.

3. General

Capacitive currents are encountered in the following cases:

- Switching of no-load overhead lines
- Switching of no-load cables
- Switching of capacitor banks
- Switching of filter banks

Interruption of capacitive currents is generally a light duty for a circuit breaker because the currents are normally a few hundred amperes. There is, however, a probability that restrikes will occur. Restrikes may lead to undesirable overvoltages or high-frequency transients affecting power quality in the network and may also cause damage to the breaking unit.

Energization of capacitive loads may lead to overvoltages or high currents. Two such cases are the switching of parallel capacitor banks and the switching of no-load lines.

The testing is designed to be representative of the service conditions up to the point of clearing, reigniting, or restriking. Because the actual value of overvoltage and transient response is totally system dependent, tests cannot replicate these effects. By providing a means of assessing the likelihood of restrike occurrence, users can determine what best suits their application. It is assumed that because capacitor switching is not the only source of overvoltage, other protection systems are employed; and in the case of unacceptable power quality for sensitive electronic equipment, a sufficiently low number of likely events are selected. A separate study of actions relative to power quality on energization should also be made.

In the selection of the rating for the circuit breaker for capacitive current switching, the following needs to be considered:

a) Application, i.e., overhead line, cable, capacitor bank, or filter bank
b) Power frequency of the network
c) Grounding situation of the network
d) Presence of single- or two-phase-to-ground faults

From the application, the restrike performance class of the circuit breaker can be determined (C1 or C2) as well as the mechanical endurance class (M1 or M2). The grounding situation of the network and the presence of single- and two-phase-to-ground faults are important factors that determine the recovery voltage across the circuit breaker, which, in turn, determines the test voltage of the circuit breaker.

The general theory of capacitive current switching is given in Clause 4, and the application and testing considerations are given in Clause 5, Clause 6, and Clause 7.

[3]IEEE publications are available from the Institute of Electrical and Electronics Engineers, 445 Hoes Lane, Piscataway, NJ 08854, USA (http://standards.ieee.org/).

[4]The IEEE standards or products referred to in this clause are trademarks of the Institute of Electrical and Electronics Engineers, Inc.

Copyright © 2005 IEEE. All rights reserved.
Copyright The Institute of Electrical and Electronics Engineers, Inc.
Provided by IHS under license with IEEE
No reproduction or networking permitted without license from IHS Not for Resale

4. General theory of capacitive current switching

4.1 De-energization of capacitive loads

4.1.1 Capacitor banks

The single-phase equivalent circuit shown in Figure 1 may be used to illustrate the conditions when de-energizing a capacitor bank.

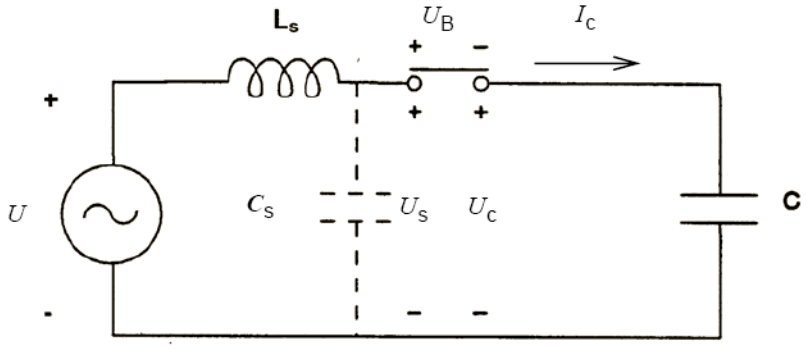

C	Capacitive load (capacitor bank)	U_c	Voltage across the capacitor bank (rms)
C_S	Source side capacitance	I_c	Capacitive current (rms)
U	Source voltage (rms)	U_S	Voltage on source side of the circuit breaker (rms)
U_B	Voltage across the circuit breaker (rms)	L_S	Source inductance

Figure 1—Single-phase equivalent circuit for capacitive current interruption

4.1.1.1 Capacitive current

The capacitive current I_c flowing in the circuit is given by Equation (1).

$$I_c = \frac{\omega_s C \times U}{1 - \omega_s^2 L_s C} = \frac{\omega_s C \times U}{1 - \frac{\omega_s^2}{\omega_i^2}} \quad (1)$$

with

$\omega_s = 2\pi f_s$, where f_s is the system frequency (Hz)

$\omega_i = \frac{1}{\sqrt{L_s C}} = 2\pi f_i$, where f_i is the inrush current frequency (Hz) (see also 4.2.1)

With $\omega_i >> \omega_s$, Equation (1) transforms to $I_c = \omega_s C \times U$.

Copyright © 2005 IEEE. All rights reserved.

Copyright The Institute of Electrical and Electronics Engineers, Inc.
Provided by IHS under license with IEEE
No reproduction or networking permitted without license from IHS Not for Resale

4.1.1.2 Recovery voltage

Figure 2 shows the current and voltage shapes at interruption.

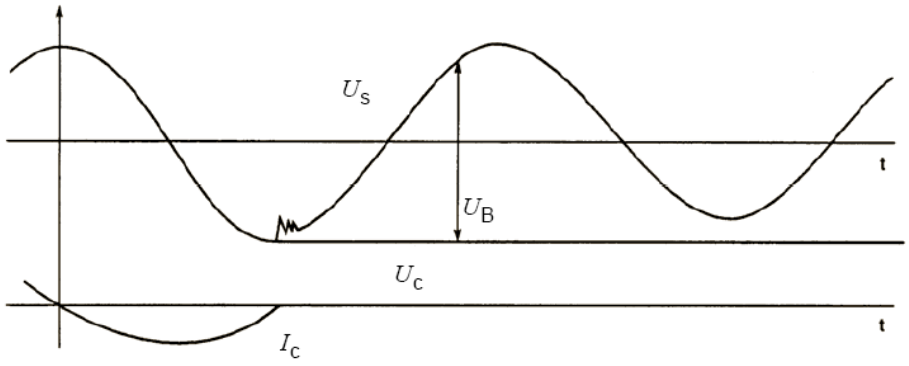

Figure 2—Voltage and current shapes at capacitive current interruption

After interruption of the current, the supply side voltage U_s will be more or less unaffected. There is only a minor decrease in amplitude, associated with the disappearance of the capacitive load. The transition to the new amplitude value is associated with a slight oscillation, the frequency of which is determined by L_s and C_s.

From the moment the current is interrupted, the charge of the capacitor bank C is trapped. The voltage U_c will, therefore, remain constant at the value it had at current zero (namely, the peak value of the supply voltage).

Together with the low current amplitude to be interrupted, the low initial rate-of-rise of the recovery voltage makes it extremely easy for the circuit breaker to interrupt. Some circuit breakers may interrupt even if the current zero would occur immediately after contact separation. Half a cycle after current zero, the recovery voltage has risen to an amplitude of no less than twice the peak value of the supply voltage. From this, it can easily be seen that a rated frequency of 60 Hz is more severe than 50 Hz. The circuit breaker may then not be able to withstand the high value of the recovery voltage across a relatively small contact gap. Dielectric breakdown may occur between the contacts, and current would start to flow again.

Figure 3 shows current and voltage wave shapes in a case where voltage breakdown occurs relatively close to the recovery voltage peak. The load side voltage will swing up to a voltage that ideally (without damping present) reaches three times the supply voltage peak u_p. The oscillation frequency of the current and voltage after the breakdown is determined by L_s and C (assuming $C \approx C_s$). The circuit breaker may easily interrupt the current again at one of its current zeros, with the result that the voltage across the capacitor may attain a new constant value, perhaps higher than before. Further breakdowns associated with even higher overvoltages across the load may then occur (see also Figure 4).

Voltage breakdowns at capacitive current interruption are divided into two categories:

a) Reignitions: Voltage breakdown during the first 1/4 cycle following current interruption.

b) Restrikes: Voltage breakdown 1/4 of a cycle or more following current interruption.

Copyright © 2005 IEEE. All rights reserved.
Copyright The Institute of Electrical and Electronics Engineers, Inc.
Provided by IHS under license with IEEE
No reproduction or networking permitted without license from IHS
Not for Resale

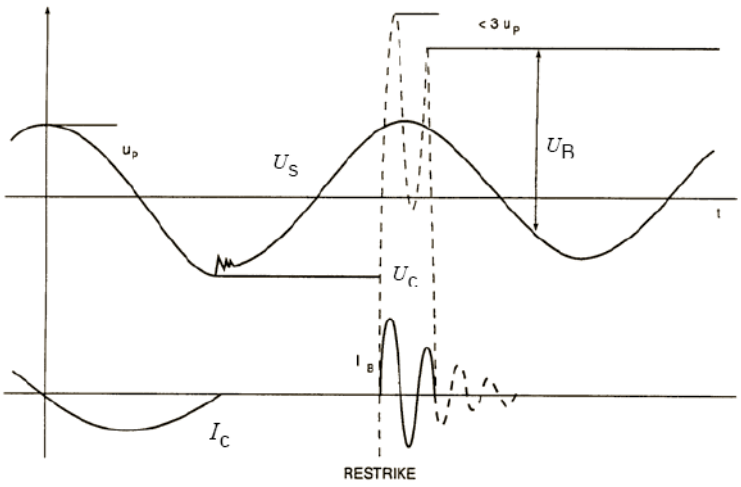

Figure 3—Voltage and current wave shapes in the case of a restrike

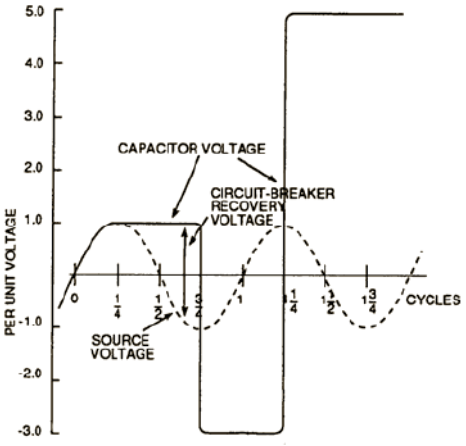

Key: 1 p.u. is the peak value of the phase-to-ground voltage.

Figure 4—Theoretical maximum voltage buildup by successive restrikes

Another phenomenon, which has been observed predominantly on vacuum circuit-breakers, may occur during capacitive current and short-circuit breaking current tests, but also at lower currents and voltages. This phenomenon is known as a *non-sustained disruptive discharge* (NSDD).

An NSDD is defined as a disruptive discharge associated with current interruption that does not result in the resumption of power frequency current or, in the case of capacitive current interruption, does not result in current at the natural frequency of the circuit.

NOTE—Oscillations following NSDDs are associated with the parasitic capacitance and inductance local to, or of, the circuit breaker itself. NSDDs may also involve the stray capacitance to ground of nearby equipment.

Copyright © 2005 IEEE. All rights reserved.

Copyright The Institute of Electrical and Electronics Engineers, Inc.
Provided by IHS under license with IEEE
No reproduction or networking permitted without license from IHS
Not for Resale

Restrikes will lead to overvoltages across the capacitive load (maximum 3 p.u. for a single restrike, where 1 p.u. is the peak value of the phase-to-ground voltage) while reignitions will not produce any overvoltages (maximum 1 p.u. theoretically). Reignitions are acceptable, but they may cause power quality problems, as they represent a temporary short circuit.

In reality, there are no restrike-free circuit breakers. It would take an infinite number of test shots to verify this. For this reason, the concept of restrike performance was introduced in IEEE Std C37.04a.

When interrupting small capacitive currents, some circuit breaker types may exhibit current chopping. Current chopping is a distortion of the current prior to current zero and is usually caused by the high arc voltage. Different types of circuit breakers have varying degrees of current chopping.

Current chopping will cause an interruption prior to the current zero of the power frequency current. In other words, the trapped charge on the capacitive load will not be at its peak. This case results in a lower recovery voltage peak and a lower stress on the contact gap of the circuit breaker.

The recovery voltages in three-phase circuits are more complicated than in the single-phase case. Figure 5 shows as an example the recovery voltage of the first pole-to-clear in a case with an ungrounded capacitive load. For the first pole-to-clear, the recovery voltage initially has a shape that would lead to a peak value equal to three times the supply voltage peak (dotted line). When the two last poles interrupt 90° after the first, there is, however, a discontinuity in the slope; and the final peak value for the first pole-to-clear is 2.5 times the supply voltage peak (see also 4.1.4).

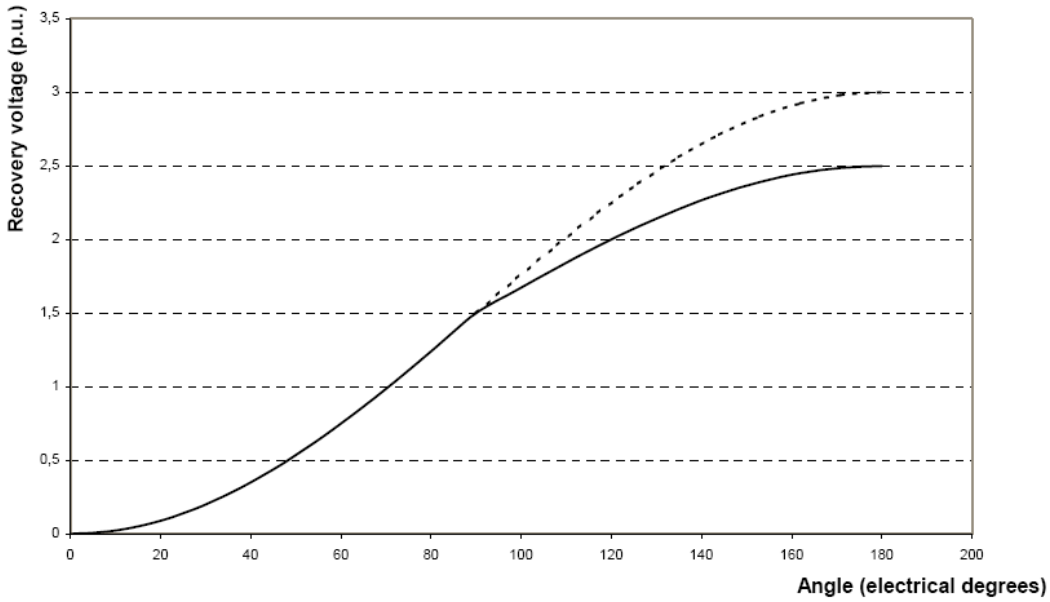

Figure 5—Recovery voltage of the first pole-to-clear at interruption of a three-phase ungrounded capacitive load

4.1.2 No-load cables

4.1.2.1 Cable charging current

The cable charging current is a function of the following characteristics:

— System voltage
— Cable geometry

Copyright © 2005 IEEE. All rights reserved.
Copyright The Institute of Electrical and Electronics Engineers, Inc.
Provided by IHS under license with IEEE
No reproduction or networking permitted without license from IHS
Not for Resale

— Insulation dielectric constant
— Cable length

The shunt capacitive reactance can be obtained from the cable manufacturer; or, if the physical constants of the cable are known, the shunt capacitive reactance can be calculated (see Gabrielle, et al. [B6])[5]. For single-conductor and three-conductor shielded cables (for the different cable configurations, see Figure 8 and Figure 7), the shunt capacitive reactance can be written as shown in Equation (2).

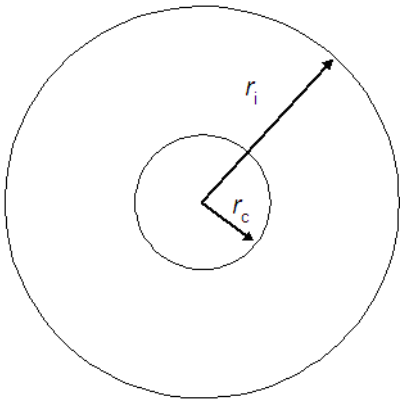

Figure 6—Cross section of a high-voltage cable

$$X_c = \frac{0{,}3495}{f_s \varepsilon_r} \ln \frac{r_i}{r_c} \text{ (MΩ per phase per km)}^6 \quad (2)$$

where

f_s is the system frequency (Hz)
ε_r is the dielectric constant of cable dielectric material (F/m)
r_i is the inside radius of shield (mm)
r_c is the conductor radius (mm)

Using the capacitive reactance, the cable charging current can be calculated and compared with the rated cable charging current of the circuit breaker given in ANSI Std C37.06. If the calculation exceeds the rating, the manufacturer should be consulted. Before an application can be made, the inrush current rating should also be checked (see 6.11.1).

4.1.2.2 Recovery voltage

The recovery voltage is equal to that of a capacitor bank (see 4.1.1.2).

[5]Number in brackets correspond to the numbers in the bibliography in Annex A.

[6]When using the quantity megaohm per phase per kilometer, it should be remembered that the shunt capacitive reactance in megaohms for more than 1 km decreases because the capacitance increases. For more than 1 km of line, therefore, the value of shunt capacitive reactance as given in Equation (2) should be divided by the number of kilometers of line.

Copyright © 2005 IEEE. All rights reserved.

Copyright The Institute of Electrical and Electronics Engineers, Inc.
Provided by IHS under license with IEEE
No reproduction or networking permitted without license from IHS
Not for Resale

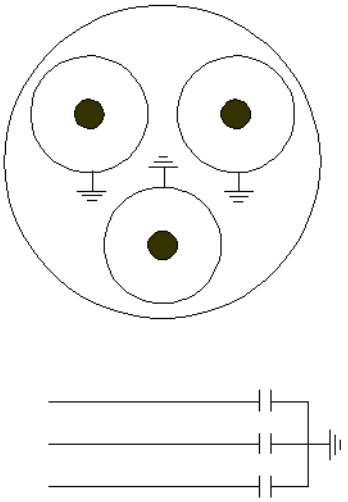

Figure 7—Screened cable with equivalent circuit

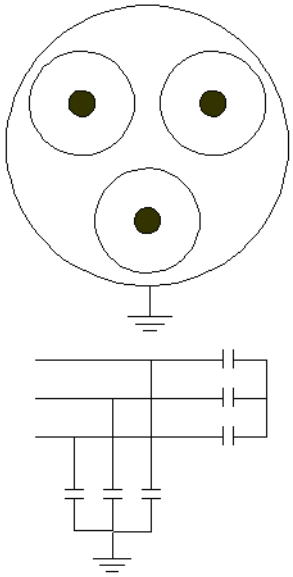

Figure 8—Belted cable with equivalent circuit

4.1.3 No-load overhead lines

4.1.3.1 Uncompensated overhead lines

4.1.3.1.1 Line charging current

A no-load overhead line can generally be represented by a capacitance. In the case of short lines (< 200 km), this capacitance can be considered concentrated. However, in the case of long lines, it must be considered distributed. Typical capacitance values vary from 9.1 nF/km per phase for single-conductor overhead lines to 14 nF/km per phase for four-conductor bundle overhead lines (see also CIGRE Technical Brochure 47 [B1]).

Due to the distributed nature of the inductance and the capacitance of the line, the peak value of the power frequency voltage at the remote (or receiving) end is higher than that at the circuit breaker (sending) end of the line. This effect is called the *Ferranti effect*. For a line length of 500 km, the voltage increase is approximately 4% and for a line of 200 km, approximately 1%. The Ferranti effect is not considered for line lengths below 200 km.

4.1.3.1.2 Recovery voltage

Overhead lines have capacitance both between phases and to ground. Figure 9 shows the peak value of the recovery voltage in the first pole-to-clear as a function of the capacitance ratio C_1/C_0 (positive to zero sequence capacitance). It has been assumed that the amplitude approaches 3 p.u. The conditions for this case are as follows:

— No capacitance to ground
— Delayed interruption of the second phase

An example of the voltages in such a case is given in Figure 5. The other extreme, $C_1 = C_0$, is the case where each phase has capacitance to ground only. The recovery voltage peak is then 2 p.u. as in a single-phase case.

--`,,```,,,,````-`-`,,`,,`,`,,`---
Copyright © 2005 IEEE. All rights reserved.
Copyright The Institute of Electrical and Electronics Engineers, Inc.
Provided by IHS under license with IEEE
No reproduction or networking permitted without license from IHS
Not for Resale

Overhead lines typically have C_1/C_0 ratios in the order of 2.0. In this case, Figure 9 shows that the recovery voltage peak is approximately 2.4 p.u.

While Figure 5 and Figure 9 assume a delayed interruption of the second phase, when the second and third phases interrupt 90° after the first, the maximum recovery voltage peak is 2.4 p.u. one half cycle after interruption (see 4.1.4).

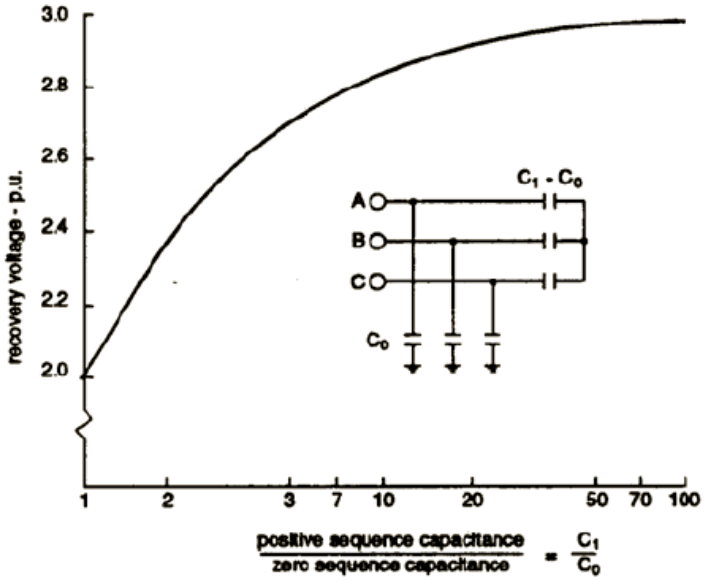

Figure 9—Recovery voltage peak in the first pole-to-clear as a function of C_1/C_0, delayed interruption of the second phase

When the characteristics of the voltage in service (e.g., shape and peak value) deviate from those of the test voltage, the restrike probability may increase or decrease. For example, if the line is compensated, the line-side component is not a trapped voltage resulting from the trapped charge, but a voltage oscillating with a frequency determined by the compensating reactors and the line-side capacitance (see 4.1.3.2).

If the C_1/C_0 ratio is greater than 2, higher voltages may be coupled to the first pole-to-clear, resulting in increased probability of restrike. In this case, the manufacturer should also be consulted because circuit breaker designs are sensitive to both current magnitude and recovery voltage waveshapes.

4.1.3.2 Shunt compensated overhead lines

Long overhead lines are often compensated with shunt reactors to reduce the charging current of the line. The compensation factor (k_l) of an overhead line is given by the ratio of the capacitive reactance of the line ($X_{C,\ line}$) to the inductive reactance ($X_{L,\ reactor}$) of the compensating reactor, as in Equation (3).

$$k_l = \frac{X_{C,line}}{X_{L,reactor}} \tag{3}$$

If $X_{L,\ reactor} > X_{C,\ line}$, the line is called *undercompensated*. A line with $X_{L,\ reactor} < X_{C,\ line}$ is called *overcompensated*.

4.1.3.2.1 Line charging current

The compensated line charging current is given by $I_{lc} = I_c^{'}(1 - k_l)$

Copyright © 2005 IEEE. All rights reserved.

Copyright The Institute of Electrical and Electronics Engineers, Inc.
Provided by IHS under license with IEEE
No reproduction or networking permitted without license from IHS Not for Resale

where

I_{lc} is the line charging current of the compensated line (A) (rms)
I_c' is the line charging current of the uncompensated line (A) (rms)
k_l is the compensation factor

Assuming a line compensated at 60% (i.e., $k_l = 0.60$), the line charging current is as follows:

$I_{lc} = I_c' (1 - 0.6) = 0.4 I_c'$ or 40% of the uncompensated value

4.1.3.2.2 Recovery voltage

If the line is compensated, the line-side component of the recovery voltage is no longer a dc voltage, but an oscillation of which the frequency is determined by the compensating reactor and the line capacitance.

The resonant frequency is approximated by Equation (4).

$$f_l \approx \frac{1}{2\pi\sqrt{LC}} = f_s \sqrt{\frac{X_{C,\,line}}{X_{L,\,reactor}}} = f_s \sqrt{k_l} \tag{4}$$

where

f_l is the resonance frequency of the compensated line (Hz)
L is the inductance of the reactor (H)
C is the total capacitance of the line (F)
f_s is the system frequency (Hz)
k_l is the compensation factor

In other words, the resonance frequency of a compensated line is dependent on the degree of compensation. Because the compensation usually is less than 1, this resonance frequency is less than the system frequency, resulting in a reduction of the recovery voltage. Typical current and voltage waveshapes are given in Figure 10.

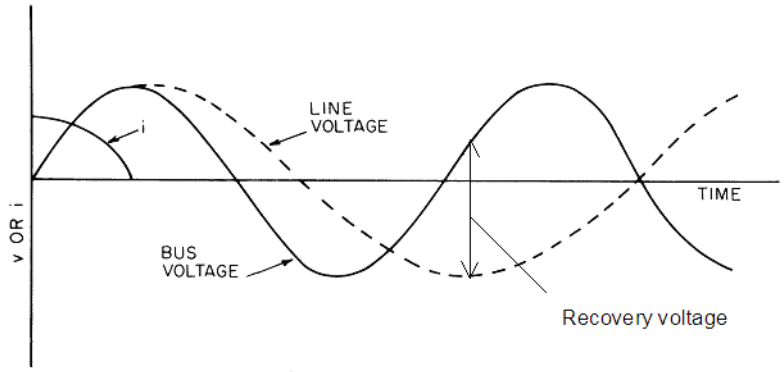

Figure 10—Typical current and voltage relations for a compensated line

The first half cycle of recovery voltage is, for this example, as shown in Figure 11. Compensation thus results in a decrease of the probability of restrike at a particular current. Under these conditions, improved performance may result, and the circuit breaker becomes restrike-free or possibly able to interrupt higher values of charging current. The manufacturer should be consulted on applications that markedly alter the recovery voltage.

Copyright © 2005 IEEE. All rights reserved.
Copyright The Institute of Electrical and Electronics Engineers, Inc.
Provided by IHS under license with IEEE
No reproduction or networking permitted without license from IHS
Not for Resale

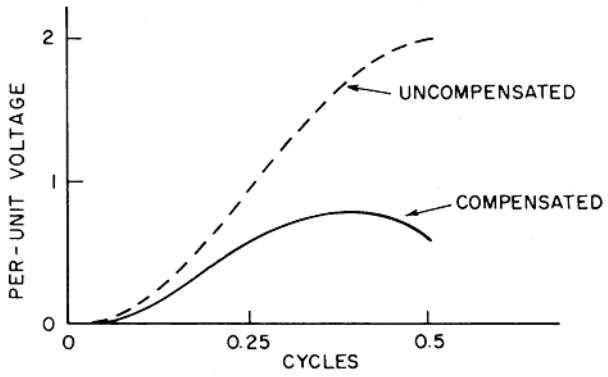

Figure 11—Half cycle of recovery voltage

4.1.3.3 Switching the charging currents of long overhead lines

Very long overhead lines in excess of 300 km, even those of simple construction type, present a special case not covered by the requirements of 4.10.7 of IEEE Std C37.09 or its notes. Where such long lines are to be switched, consideration should be given to the higher value of peak transient recovery voltage (TRV) present on interruption. Some idea of the ability of a particular circuit breaker for making and breaking this requirement can be gained by considering any out-of-phase switching evidence that may exist. Such evidence will usually provide adequate demonstration of the elevated TRV; and, although the current values for the out-of-phase duty are higher than the charging current of the line, they may be considered comparable for providing background evidence for this special duty. However, such limited demonstration of capability as the out-of-phase test cannot be considered satisfactory for demonstration purposes for an overhead line switching duty. For full compliance, evidence will be required to satisfy the capacitive current switching requirements of 4.10 of IEEE Std C37.09, but to the elevated values required by the specific application.

Some users may be concerned about rare or occasional switching operations from one end on a long line. This case can occur during the early development stages of a system when intermediate substations may not be fully equipped or may even be by-passed. In such cases, it may be appropriate to consider the out-of-phase capability in relation to the combined load presented by the lines. If satisfactory for the current and voltage conditions, then specific testing for the severe capacitive current switching duty of IEEE Std C37.09 would not be necessary at the enhanced levels of the extended line. They would be required for the switching duty of the individual lines, as normal. There is an obvious risk associated with such operation, and this acceptance of the out-of-phase evidence is possible only if the operating regime for such an extended line length condition is infrequent. Infrequent operation is often likely to be the case for such development stages of a system.

4.1.4 Voltage factors for capacitive current switching tests

Depending on the capacity of a high-power laboratory, capacitive current switching tests may be performed as three-phase tests or single-phase tests. For the higher voltages (i.e., 362 kV, 420 kV, 550 kV, and 800 kV), unit tests are sometimes made.

Especially when single-phase tests are made to cover three-phase application, the test voltage shall reflect the application of the circuit breaker in the system. One of the factors influencing this is the grounding situation of the network. The other is the presence of single- or two-phase faults.

Copyright © 2005 IEEE. All rights reserved.

Copyright The Institute of Electrical and Electronics Engineers, Inc.
Provided by IHS under license with IEEE
No reproduction or networking permitted without license from IHS
Not for Resale

In 4.10.7 of IEEE Std C37.09, the voltage factors shown in Table 1 are given for single-phase tests. The test voltage measured at the circuit breaker location prior to interruption shall not be less than the product of the rated voltage $U_r/\sqrt{3}$ and the voltage factors given in Table 1.

Table 1—Voltage factors for single-phase capacitive current switching tests

Voltage factor (k_c)	Application
1.0	Tests corresponding to normal service in effectively grounded neutral systems without significant mutual influence of adjacent phases of the capacitive circuit, typically capacitor banks with effectively grounded neutral and screened cables.
1.2	Test on belted cables and line charging current switching[a] corresponding to normal service conditions in effectively grounded neutral systems for rated voltages 72.5 kV and above.
1.4	— Breaking during normal service conditions in systems having a ungrounded neutral including screened cables;[a] — Breaking of capacitor banks ungrounded neutral; — Test on belted cables and line charging current switching[b] corresponding to normal service conditions in effectively grounded systems for rated voltages less than 72.5 kV; — Breaking in the presence of single- or two-phase-to-ground faults in systems having a solidly grounded neutral.
1.7	Tests corresponding to breaking in ungrounded systems in the presence of single- or two-phase-to-ground faults.[c]

NOTE 1—The voltage factors for line charging current switching tests of 1.2 and 1.4 are applicable to single-circuit line construction. Requirements for multiple overhead line constructions may be greater than these factors.

NOTE 2—The 1.4 factor is a compromise and is valid for breaking capacitive currents in ungrounded systems, where the second and third poles-to-clear interrupt 90° after the first.

NOTE 3—When the nonsimultaneity of contact separation in the different poles of the circuit breaker exceeds $1/6^{th}$ of a cycle of rated frequency, it is recommended to raise the voltage factor or to make only three-phase tests. Such circuit breakers fall outside the scope of IEEE Std C37.09.

[a]When a significant capacitance to ground on the source side is present, the factor will be reduced.
[b]Under the condition that the line can be replaced partly or fully by a concentrated capacitor bank.
[c]The factor 1.7 is derived from the fact that the healthy phase sees the phase-to-phase voltage.

The voltage factor 1.4 is explained as follows: When the current in the first pole is interrupted, the voltage across the circuit breaker will rise as if the voltage factor would have been 1.5. When the second and third poles interrupt 90° later, there is a discontinuity; and the recovery voltage across the first pole-to-clear will follow a 1-cosine wave with a voltage factor of 1.25. The recovery voltage is indicated by the solid line in Figure 12. By using a voltage factor of 1.25 (dotted line in Figure 12), the initial portion of the recovery voltage across the first pole is not adequately covered. Using a voltage factor of 1.5 will result in too high a stress. A voltage factor of 1.4 as indicated by the dashed curve in Figure 12 is a compromise that adequately covers the actual recovery voltage.

Careful consideration should be given to these voltage factors when circuit breakers are relocated to other parts of the system where the application is different from that of the original location.

Copyright © 2005 IEEE. All rights reserved.
Copyright The Institute of Electrical and Electronics Engineers, Inc.
Provided by IHS under license with IEEE
No reproduction or networking permitted without license from IHS
Not for Resale

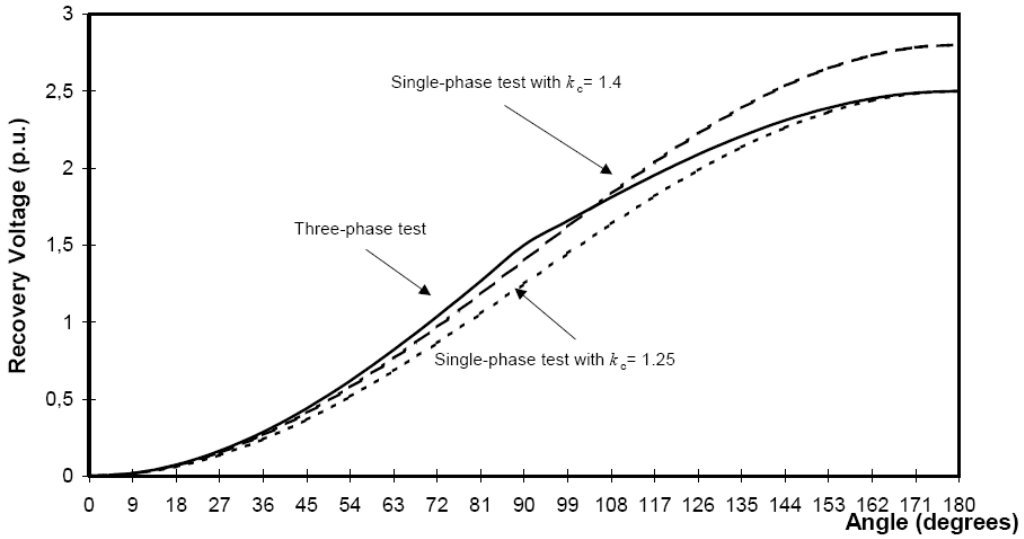

Figure 12—Recovery voltage on first pole-to-clear for three-phase interruption: capacitor bank with isolated neutral (50 Hz)

The voltage factors specified in Table 1 are associated with single-circuit line constructions and are chosen to accommodate all known physical arrangements of the conductors of such circuits. Note 1 to Table 1 indicates that switching in the case of multiple overhead line constructions that have parallel circuits may require a voltage factor greater than 1.2 and 1.4. The reason for the higher voltage factor is because such circuits are likely to have an enhancement to the line-side residual voltage following interruption. The enhancement is associated with the coupling (pick-up) from the parallel circuit and may add a power frequency peak voltage of up to 0.2 p.u., depending upon the geometry of the conductor systems of the two circuits.

In addition, the effect of these changes on the line-side voltage, following interruption by the first pole-to-clear, does affect the shape of the TRV across that opening pole. Consideration of this effect may require additional testing if the existing factor does not adequately cover the combined effects. Alternatively, the higher of the given values, e.g., 1.4 for 1.2, can be selected to encompass the specific waveshape.

On occasion, utilities have specified a voltage factor of 1.3 instead of 1.2 for their double-circuit lines.

4.2 Energization of capacitive loads

Energization of capacitive loads is usually associated with transient voltages and currents. Those transients are the following:

— Inrush currents

— Overvoltages caused by the system response to the voltage dip when energizing capacitor banks (see 4.2.1)

— Overvoltages caused by traveling waves on transmission lines and cables

In 4.2.1 through 4.2.3, the phenomena associated with the energization of capacitor banks, lines, and cables are treated.

Copyright © 2005 IEEE. All rights reserved.

Copyright The Institute of Electrical and Electronics Engineers, Inc.
Provided by IHS under license with IEEE
No reproduction or networking permitted without license from IHS Not for Resale

4.2.1 Capacitor banks

Because the use of capacitor banks for compensation purposes is increasing, it is common that more than one capacitor bank is connected to the same bus. This practice has no influence on the conditions at interruption. The current at closing (i.e., inrush current), however, is affected to a high degree. Two different situations may occur:

a) The capacitor bank is energized from a bus that does not have other capacitor banks energized. This situation is called *isolated capacitor bank switching*.

b) The capacitor bank is energized from a bus that has other capacitor banks energized. This situation is called *back-to-back capacitor bank switching*.

The conditions for isolated and back-to-back capacitor bank switching are given in 4.2.1.1 and 4.2.1.2. Even energized capacitor banks in nearby substations may contribute to the inrush current so that a back-to-back situation occurs.

Especially the second case may give rise to an inrush current of very high amplitude and frequency, which sometimes has to be limited in order not to be harmful to the circuit breaker, the capacitor banks, and/or the network. The magnitude and frequency of this inrush current is a function of the following:

— Applied voltage (point on the voltage wave at closing)
— Capacitance of the circuit
— Inductance in the circuit (amount and location)
— Any charge on the capacitor bank at the instant of closing
— Any damping of the circuit due to closing resistors or other resistances in the circuit

It is assumed that the capacitor bank is discharged prior to energization. This assumption is reasonable, as capacitor units are fitted with discharging resistors that will discharge the capacitor bank. Typical discharge times are in the order of 5 min.

The transient inrush current to an isolated bank is less than the available short-circuit current at the capacitor bank terminals. It rarely exceeds 20 times the rated current of the capacitor bank at a frequency that approaches 1 kHz. Because a circuit breaker must meet the making current requirements of the system, transient inrush current is not a limiting factor in isolated capacitor bank applications.

When capacitor banks are switched back-to-back (i.e., when one bank is switched while another bank is connected to the same bus), transient currents of prospective high magnitude and with a high natural frequency may flow between the banks on closing of the circuit breaker. The effects are similar to that of a restrike on opening. This oscillatory current is limited only by the impedance of the capacitor bank and the circuit between the energized bank or banks and the switched bank. This transient current usually decays to zero in a fraction of a cycle of the system frequency. In the case of back-to-back switching, the component supplied by the source is at a lower frequency; therefore, small it may be neglected.

4.2.1.1 Isolated capacitor bank

A bank of shunt capacitors is considered isolated when the inrush current on energization is limited by the inductance of the source and the capacitance of the bank being energized. A capacitor bank is also considered isolated if the maximum rate of change, with respect to time, of transient inrush current on energizing an uncharged bank does not exceed the maximum rate of change of the symmetrical short-circuit current at the voltage at which the current is applied. The limiting value is equal to Equation (5).

$$\left(\frac{\mathrm{d}i_{\mathrm{i}}}{\mathrm{d}t}\right)_{\max} = \omega_{\mathrm{s}} I_{\mathrm{sc}} \sqrt{2} \tag{5}$$

Copyright © 2005 IEEE. All rights reserved.
Copyright The Institute of Electrical and Electronics Engineers, Inc.
Provided by IHS under license with IEEE
No reproduction or networking permitted without license from IHS
Not for Resale

where

$\left(\frac{di_i}{dt}\right)_{max}$ is the maximum rate of change of inrush current (A/s)

I_{sc} is the rated rms short-circuit current (A)

$\omega_s = 2\pi f_s$ is the angular system frequency (rad/s) and f_s is the power frequency (Hz)

The single-phase equivalent of a circuit where two capacitor banks are connected to a busbar is shown in Figure 13. L_1 and L_2 represent the stray inductance (or stray inductance plus additional damping inductance). The inductance L_s of the supply network will be several orders of magnitude higher than L_1 and L_2.

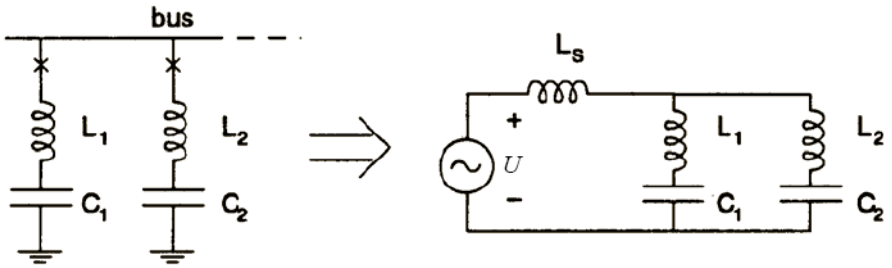

Figure 13—Parallel capacitor banks

The case of energizing an isolated capacitor bank is equal to energization of C_1 when C_2 is not connected in the circuit described in Figure 13. The circuit consists then of the source inductance L_s in series with the capacitor bank C_1. L_1 can be disregarded here because $Ls >> L_1$. In this case, the peak of the inrush current ($i_{i\ peak}$) and inrush current frequency (f_i) are limited by the source impedance L_s.

Assuming that bank #1 is to be connected to the busbar and bank #2 is not connected, Equation (6) and Equation (7) apply.

$$i_i = \hat{u}\sqrt{\frac{C_1}{L_s}}\sin\omega_i t \tag{6}$$

and

$$f_i = \frac{1}{2\pi\sqrt{(L_s + L_1)C_1}} \tag{7}$$

where

i_I is the inrush current (A)

$\hat{u}$ is the peak of the source voltage (V)

$\omega_i = 2\pi f_i$ is the angular inrush current frequency (rad/s) and f_i is inrush current frequency (Hz)

With $L_s >> L_1$, the frequency of the inrush current is as shown in Equation (8).

$$f_i = \frac{1}{2\pi\sqrt{L_s C_1}} \tag{8}$$

Copyright © 2005 IEEE. All rights reserved.

Copyright The Institute of Electrical and Electronics Engineers, Inc.
Provided by IHS under license with IEEE
No reproduction or networking permitted without license from IHS
Not for Resale

The highest inrush current peak is obtained when switching the capacitor bank at the peak of the supply voltage as shown in Equation (9).

$$i_{\text{i peak}} = u\sqrt{2}\sqrt{\frac{C_1}{L_s}} \tag{9}$$

With $I_{sc} = \dfrac{U}{\omega_s L_s}$ and $I_1 = \omega_s U C_1$, Equation (8) and Equation (9) transform to Equation (10) and Equation (11).

$$f_i = f_s\sqrt{\frac{I_{sc}}{I_1}} \tag{10}$$

and

$$i_{\text{i max}} = \sqrt{2}\sqrt{I_{sc} I_1} \tag{11}$$

where

f_s is the power frequency (Hz)
I_{sc} is the short-circuit current of the source (A, rms)
I_1 is the current through capacitor bank #1 (A, rms)

In the three-phase case, the same equations may be applied. The voltage u is then the phase-to-ground voltage.

4.2.1.2 Back-to-back capacitor bank

The inrush current of an isolated bank will be increased when other capacitor banks are connected to the same bus.

If in Figure 13 bank #1 is connected to the busbar and bank #2 is to be connected, the inrush current associated with the charging of bank #2 is supplied by bank #1 (i.e., back-to-back switching). As stated in 4.2.1, capacitor bank #2 is discharged prior to energization. The peak and frequency of the inrush current are now limited by L_1 and L_2, in Equation (14).

$$i_{\text{i peak}} = U\sqrt{2}\sqrt{\frac{C_{eq}}{L_{eq}}} \tag{12}$$

with

$$C_{eq} = \frac{C_1 C_2}{C_1 + C_2} \tag{13}$$

and

$$L_{eq} = L_1 + L_2 \tag{14}$$

This situation can reach extreme values because the magnitude of L_{eq} can be arbitrarily small.

Copyright © 2005 IEEE. All rights reserved.
Copyright The Institute of Electrical and Electronics Engineers, Inc.
Provided by IHS under license with IEEE
No reproduction or networking permitted without license from IHS
Not for Resale

The frequency of the inrush current is now shown in Equation (15).

$$f_{\mathrm{i}} = \frac{1}{2\pi\sqrt{L_{\mathrm{eq}}C_{\mathrm{eq}}}} \tag{15}$$

Inserting Equation (13) and Equation (14) in Equation (12) and Equation (15) gives Equation (16) and Equation (17) for the inrush current peak and frequency, respectively.

$$i_{\mathrm{i\,peak}} = U\sqrt{2}\sqrt{\frac{I_1 I_2}{u\omega_{\mathrm{s}}L_{\mathrm{eq}}(I_1+I_2)}} = \sqrt{2}\sqrt{\frac{U\times I_1 I_2}{\omega_{\mathrm{s}}L_{\mathrm{eq}}(I_1+I_2)}} \tag{16}$$

$$f_{\mathrm{i}} = \frac{1}{2\pi}\sqrt{\frac{\omega_{\mathrm{s}}U(I_1+I_2)}{L_{\mathrm{eq}}I_1 I_2}} = \frac{1}{2\pi}\sqrt{\frac{2\pi f_{\mathrm{s}}U(I_1+I_2)}{L_{\mathrm{eq}}I_1 I_2}} \tag{17}$$

In Equation (16) and Equation (17), it is assumed that $I_1 = \omega_{\mathrm{s}}C_1U$ and $I_2 = \omega_{\mathrm{s}}C_2U$ (see also 4.1.1.1).

Connecting bank C_{n+1} with n banks in parallel that are already connected,

$$L' = \frac{1}{\frac{1}{L_1}+\frac{1}{L_2}+\ldots\ldots\frac{1}{L_n}} \tag{18}$$

and

$$C' = C_1 + C_2 + \ldots\ldots + C_n\,. \tag{19}$$

To obtain the inrush current peak and frequency can be done by using Equation (12). C_{eq} can be obtained by substituting C_1 by C' and C_2 by C_{n+1} in Equation (13). L_{eq} can be obtained by substituting and L_1 by L' and L_2 by L_{n+1} in Equation (14).

$$C_{\mathrm{eq}} = \frac{C'\times C_{n+1}}{C'+C_{n+1}} \text{ and } L_{\mathrm{eq}} = L'+L_{n+1}$$

With $L_1 = L_2 = \ldots\ldots = L_{n+1} = L$ and $C_1 = C_2 = \ldots\ldots = C_{n+1} = C$, $L' = L/n$ and $C' = nC$,

$$C_{\mathrm{eq}} = \frac{nC\times C}{nC+C} = \frac{n}{n+1}C \text{ and } L_{\mathrm{eq}} = \frac{L}{n}+L = \frac{n+1}{n}L$$

$$i_{\mathrm{i\,peak}} = U\sqrt{2}\,\frac{n}{n+1}\sqrt{\frac{C}{L}} \tag{20}$$

and

$$f_{\mathrm{i}} = \frac{1}{2\pi\sqrt{LC}} \tag{21}$$

In a three-phase case, the same equations may be applied. The voltage U is then the rms value of rated phase-to-ground voltage $U_{\mathrm{r}}/\sqrt{3}$.

Copyright © 2005 IEEE. All rights reserved.

Copyright The Institute of Electrical and Electronics Engineers, Inc.
Provided by IHS under license with IEEE
No reproduction or networking permitted without license from IHS Not for Resale

In this case, Equation (16) and Equation (17) transform to Equation (22) and Equation (23), respectively.

$$i_{\text{i peak}} = \sqrt{2}\sqrt{\frac{10^3 U_{\text{r}} I_1 I_2}{2\pi f_{\text{s}}\sqrt{3}\times 10^{-6} L_{\text{eq}}(I_1 + I_2)}} = 13556\sqrt{\frac{U_{\text{r}} I_1 I_2}{f_{\text{s}} L_{\text{eq}}(I_1 + I_2)}} \approx 13\,500\sqrt{\frac{U_{\text{r}} I_1 I_2}{f_{\text{s}} L_{\text{eq}}(I_1 + I_2)}} \quad (22)$$

and

$$f_{\text{i}} = \frac{1}{2\pi}\sqrt{\frac{2\pi f_{\text{s}} 10^3 U_{\text{r}}(I_1 + I_2)}{\sqrt{3}\times 10^{-6} L_{\text{eq}} I_1 I_2}} \approx 9.5\sqrt{\frac{f_{\text{s}} U_{\text{r}}(I_1 + I_2)}{L_{\text{eq}} I_1 I_2}} \quad (23)$$

where

f_{i} is the inrush current frequency (kHz)
f_{s} is the system frequency (Hz)
I_1, I_2 is the capacitor bank currents (A, rms)
$i_{\text{i peak}}$ is the inrush current peak (A, rms)
L_{eq} is the equivalent inductance (μH)
U_{r} is the rated voltage (kV, rms)

Typical amplitudes of the inrush currents for back-to-back energization of capacitor banks are several kiloamperes with frequencies of 2 kHz to 5 kHz. Typical values are given in ANSI Std C37.06. Capacitors can normally withstand amplitudes up to 100 times their charging current.

If the inrush current amplitude and frequency exceed those stated in ANSI Std C37.06, it may be necessary to limit them. Such limitation can be done by inserting additional series inductance in the circuit (e.g., reactor or pre-insertion inductor) or by using pre-insertion resistors (see 4.2.3). Another possibility is to use controlled switching.

4.2.2 Cables

A circuit breaker may be required to energize a no-load cable during its normal operating duties. Prior to energization, the cable is usually at ground potential, but can have a trapped charge from a previous switching operation. A cable may be switched from a bus that does not have other cables energized (i.e., single or isolated cable) or against a bus that has one or more cables energized (i.e., back-to-back cable).

4.2.2.1 Isolated cable

A cable is defined as isolated if the maximum rate of change, with respect to time, of transient inrush current on energizing an uncharged cable does not exceed the rate of change of current associated with the maximum symmetrical interrupting current. This limiting value is numerically equal to Equation (24).

$$\left(\frac{\mathrm{d}i_{\text{i}}}{\mathrm{d}t}\right)_{\text{max}} = \omega_{\text{s}}\sqrt{2} I_{\text{sc}} = 2\pi f_{\text{s}}\sqrt{2} I_{\text{sc}} \quad (24)$$

where

$\left(\frac{\mathrm{d}i_{\text{i}}}{\mathrm{d}t}\right)_{\text{max}}$ is the maximum rate of change of inrush current (A/s)
I_{sc} is the rated rms short-circuit current (A)
$\omega_{\text{s}} = 2\pi f_{\text{s}}$ is the angular system frequency (rad/s) and f_{s} is the power frequency (Hz)

Copyright © 2005 IEEE. All rights reserved.
Copyright The Institute of Electrical and Electronics Engineers, Inc.
Provided by IHS under license with IEEE
No reproduction or networking permitted without license from IHS
Not for Resale

By this definition, it is possible to have cable circuits that are physically back-to-back, but are considered isolated for application purposes, provided a large inductance is located between the two cable circuits. The inductance must be large enough so that by itself it would limit fault current to a value less than or equal to the circuit breaker rating.

4.2.2.2 Back-to-back cables

Cables are considered switched back-to-back if the maximum rate of change of transient inrush current on energizing an uncharged cable exceeds that specified for an isolated cable.

4.2.2.3 Cable inrush current

The energization of a cable by the closing of a circuit breaker will result in a transient inrush current. The magnitude and rate of change of this inrush current are a function of the following:

— Applied voltage (including the point on the voltage wave at closing)
— Cable surge impedance
— Cable capacitive reactance
— Inductance in the circuit (amount and location)
— Any charges on the cable at the instant of closing
— Any damping of the circuit because of closing resistors or other resistance in the circuit

The transient inrush current to an isolated cable is less than the available short-circuit current at the circuit breaker terminals. Because a circuit breaker must meet the making current requirements of the system, transient inrush current is not a limiting factor in isolated cable applications.

When cables are switched back-to-back (i.e., when one cable is switched while other cables are connected to the same bus), transient currents of high magnitude and initial high rate of change may flow between cables when the switching circuit breaker is closed or restrikes on opening. This surge current is limited by the cable surge impedances and any inductance connected between the energized cable(s) and the switched cable. This transient current usually decays to zero in a fraction of a cycle of the system frequency. During back-to-back cable switching, the component of current supplied by the source is at a lower rate of change and so small that it may be neglected.

A typical circuit for back-to-back cable switching is shown in Figure 14. The inductances L_1, L_2, and L_b between the cables are often very small with respect to the inductance L_s of the source. In many cases, they will be less than 1% of the source inductance. They consist of the inductances from the cables to the circuit breakers, the circuit breaker inductances, and the bus inductance of the current path. Values of inductance depend upon the physical configuration and are hence site specific and unable to be standardized. However, a representative range is 0.66 μH to 1.0 μH per phase per meter.

Copyright © 2005 IEEE. All rights reserved.

Copyright The Institute of Electrical and Electronics Engineers, Inc.
Provided by IHS under license with IEEE
No reproduction or networking permitted without license from IHS
Not for Resale

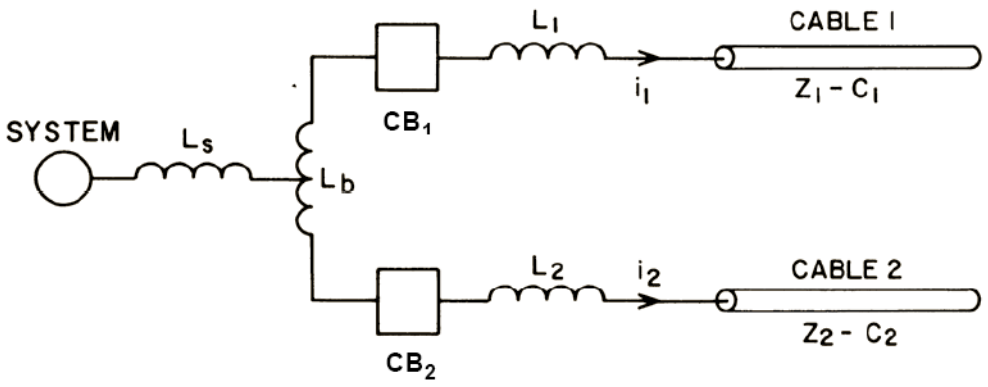

CB_1	Circuit breaker
CB_2	Circuit breaker, open for isolated cable switching, closed for back-to-back switching
L_S	Source inductance
L_1, L_2	Inductance between cables 1 and 2 and bus
Z_1, Z_2	Surge impedance of cables 1 and 2
C_1, C_2	Capacitance of cables 1 and 2
L_b	Inductance of bus connecting the cables

Figure 14—Typical circuit for back-to-back switching

4.2.2.3.1 Isolated cable inrush current

In switching an isolated cable, if the source inductance is greater than 10 times the cable inductance, the cable can be represented as a capacitor. Otherwise, under transient conditions, the cable can be represented by its surge impedance. An expression for surge impedance is given for single-conductor and three-conductor shielded cables by Equation (25) (see also Figure 6).

$$Z = \sqrt{\frac{L}{C}} = \frac{138}{\sqrt{\varepsilon}} \times {}^{10}\log\left(\frac{r_i}{d}\right) \ (\Omega) \tag{25}$$

where

L is the distributed inductance of the cable (H)
C is the distributed capacitance of the cable (F)
ε is the dielectric constant of cable dielectric material
r_i is the inside radius of shield (mm)
d is the conductor radius (mm)

Typical values of ε range from 2.3 (polyethylene) to 4 (fluid impregnated paper); a typical value for Z is 50 Ω.

To calculate the inrush current for a single cable, Figure 15 may be used, with $Z_2 = 0$.

$$i_i(t) = \frac{u_m - u_t}{Z_1}\left[1 - \exp\left(-\frac{Z_1}{L}t\right)\right] \tag{26}$$

Copyright © 2005 IEEE. All rights reserved.
Copyright The Institute of Electrical and Electronics Engineers, Inc.
Provided by IHS under license with IEEE
No reproduction or networking permitted without license from IHS
Not for Resale

with

$$i_{\text{i peak}} = \frac{u_{\text{m}} - u_{\text{t}}}{Z_1}$$

where

u_{m} is the crest of applied voltage (V)
u_{t} is the trapped voltage on cable being switched (V)
f_{s} is the source frequency (power frequency) (Hz)
i_{i} is the inrush current (Hz)
$i_{\text{i peak}}$ is the peak of the inrush current (A)
Z_{l} is the cable surge impedance (Ω)
L is the source inductance (H)

The initial rate-of-rise (i.e., di/dt at $t = 0$) of the inrush current is $\frac{u_{\text{m}} - u_{\text{t}}}{L}$. For application purposes, i_{peak} should be compared to the value given in ANSI Std C37.06.

The cable inrush current is not oscillatory in the usual frequency-related sense, but the initial slope can be used to determine an equivalent frequency that can be compared with the rated inrush frequency. In general,

$$\left(\frac{\text{d}i_{\text{i}}}{\text{d}t}\right)_{\text{r}} = 2\pi f_{\text{ir}} i_{\text{ir}} \text{ (A/s)} \tag{27}$$

where

$\left(\frac{\text{d}i_{\text{i}}}{\text{d}t}\right)_{\text{r}}$ is the rate-of-change of rated inrush current (A/s)
f_{ir} is the rated inrush current frequency (Hz)
i_{ir} is the rated peak inrush current (A)

The equivalent frequency f_{eq} for a cable inrush current is then obtained as follows:

$2\pi f_{\text{eq}} i_{\text{ir}} = \frac{u_{\text{m}} - u_{\text{t}}}{L}$, which gives $f_{\text{eq}} = \frac{u_{\text{m}} - u_{\text{t}}}{2\pi L i_{\text{ir}}}$; and for proper circuit breaker application, f_{eq} should be less than the rated inrush current frequency.

4.2.2.3.2 Back-to-back cable inrush current

Neglecting the source contribution, back-to-back cables can be represented as shown in Figure 15.

The initial pulse of current has a front expressed as shown in Equation (28).

$$i(t) = \frac{u_{\text{m}} - u_{\text{t}}}{Z_1 + Z_2}\left[1 - \exp\left(-\frac{Z_1 + Z_2}{L} t\right)\right] \tag{28}$$

Assuming that the $L/(Z_1 + Z_2)$ time constant is less than 1/5 of the travel time of the cable out and back, the initial crest of the inrush current is then $(u_{\text{m}} - u_t)/(Z_1 + Z_2)$, which for application should be less than the rated peak inrush current.

Copyright © 2005 IEEE. All rights reserved.

Copyright The Institute of Electrical and Electronics Engineers, Inc.
Provided by IHS under license with IEEE
No reproduction or networking permitted without license from IHS Not for Resale

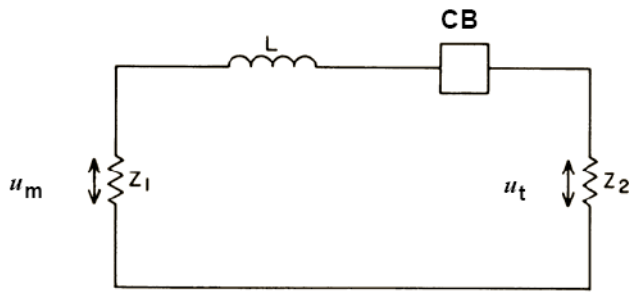

u_m	Crest of applied voltage
u_t	Trapped voltage on cable being switched
Z_1, Z_2	Cable surge impedance
L	Total inductance between cable terminals
CB	Circuit breaker

Figure 15—Equivalent circuit for back-to-back cable switching

The peak inrush current when energizing a cable with another already connected to the bus is given by Equation (29) and Equation (30).

$$i_{ipeak} = \frac{u_m - u_t}{Z_1 + Z_2} \tag{29}$$

and

$$f_{eq} = f_s \left[\frac{u_m - u_t}{\omega(L_1 + L_2) I_{ir}} \right] \tag{30}$$

The inrush current when energizing a cable with an equal cable already connected to the bus is given by Equation (31) and Equation (32).

$$i_{ipeak} = \frac{u_m - u_t}{2Z} \tag{31}$$

and

$$f_{eq} = f_s \left[\frac{u_m - u_t}{\omega(L_1 + L_2) I_{ir}} \right] \tag{32}$$

Differentiating the expression for the current at $t = 0$ will give the maximum initial rate of change of the inrush current, as in Equation (33).

$$\left(\frac{di}{dt} \right)_0 = \frac{u_m - u_t}{L} \text{ (A/s)} \tag{33}$$

The rate of change of inrush current can reach extreme values because the magnitude of L can be arbitrarily small.

Copyright © 2005 IEEE. All rights reserved.
Copyright The Institute of Electrical and Electronics Engineers, Inc.
Provided by IHS under license with IEEE
No reproduction or networking permitted without license from IHS
Not for Resale

Additional inductance may be added in series with the inductances making up *L* to meet the rated inrush frequency requirement.

4.2.2.3.3 Alternate configurations

Other combinations of circuit elements can produce inrush currents associated with cable switching. For example, a cable can be switched from a bus that has a capacitor bank connected as shown in Figure 16. The inrush current can be calculated using the equivalent circuit of Figure 17.

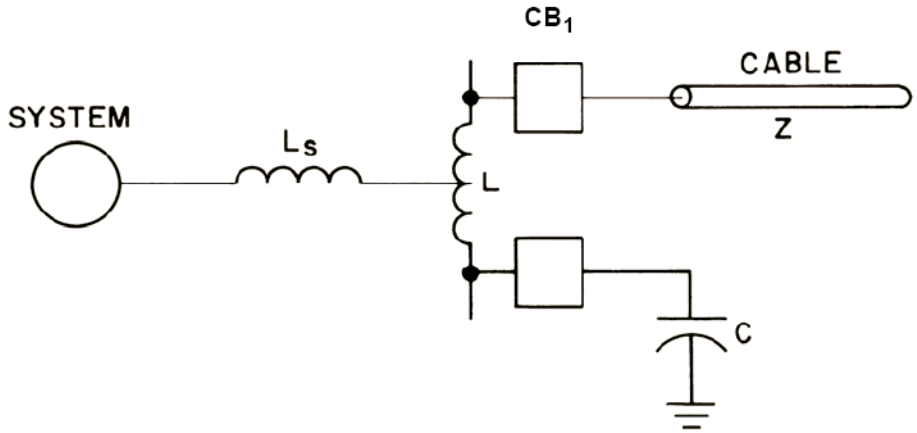

CB_1	Circuit breaker
L_S	Source inductance
L	Total inductance between bank and cable
Z	Cable surge impedance
C	Capacitance of bank

Figure 16—Bank-to-cable switching circuit

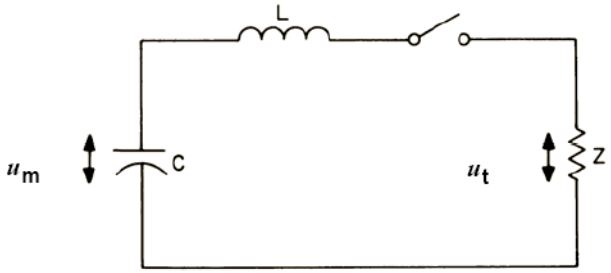

u_m	Crest of applied voltage
u_t	Trapped voltage on cable being switched
Z	Cable surge impedance
L	Circuit inductance between bank and cable
C	Capacitance of bank

Figure 17—Equivalent bank-to-cable switching circuit

Copyright © 2005 IEEE. All rights reserved.

Copyright The Institute of Electrical and Electronics Engineers, Inc.
Provided by IHS under license with IEEE
No reproduction or networking permitted without license from IHS
Not for Resale

The maximum initial rate of change of current is given by Equation (34).

$$\left(\frac{\mathrm{d}i}{\mathrm{d}t}\right)_0 = \frac{u_\mathrm{m} - u_\mathrm{t}}{L} \text{ (A/s)} \tag{34}$$

and, as before, is limited by the loop inductance *L.* The equivalent frequency is determined as in 4.2.2.3.1, and required adjustments can be made by increasing the value of *L* (e.g., insertion of a reactor).

The form of the inrush current is a function of the circuit parameters that, in the equivalent circuit, form a series RLC circuit. Using standard methods of analysis, the maximum peak inrush currents are shown in Equation (35), Equation (36), and Equation (37).

$$\frac{Z^2}{4} = \frac{L}{C} \qquad i_\mathrm{ipeak} = 0.368\,\frac{u_\mathrm{m} - u_\mathrm{t}}{Z} \tag{35}$$

$$\frac{Z^2}{4} < \frac{L}{C} \qquad i_\mathrm{ipeak} \approx \frac{u_\mathrm{m} - u_\mathrm{t}}{\sqrt{L/C - Z^2/4}}\left[\exp\left(-\frac{Z\pi}{4L}\frac{1}{\sqrt{L/C - Z^2/4}}\right)\right] \tag{36}$$

$$\frac{Z^2}{4} > \frac{L}{C} \qquad i_\mathrm{ipeak} = \frac{u_\mathrm{m} - u_\mathrm{t}}{\sqrt{L/C - Z^2/4}}\left[\exp(-\alpha t_\mathrm{m}) - \exp(-\beta t_\mathrm{m})\right] \tag{37}$$

where Equation (38), Equation (39), and Equation (40) apply.

$$t_\mathrm{m} = \frac{\ln \alpha/\beta}{\alpha - \beta} \tag{38}$$

$$\alpha = \frac{Z}{L} - \sqrt{\frac{Z^2}{L^2} - \frac{4}{LC}} \tag{39}$$

$$\beta = \frac{Z}{L} + \sqrt{\frac{Z^2}{L^2} - \frac{4}{LC}} \tag{40}$$

For application, the peak inrush current should be checked against the capability of the circuit breaker in question.

Many other combinations of banks, cables, and lines will occur in practice. For example, a cable may be used to exit from a substation and then connect to an overhead line after a short distance. One possible approach when considering circuits of this type is to compare the relative contributions of the cable and the line. For short cable runs, this circuit could be considered the equivalent of a line with a capacitor to ground replacing the cable. Similar simplifications can be used for other configurations.

4.2.3 Energization and re-energization of overhead lines

When an overhead line is switched onto an energized network, a voltage wave is imposed on the line. The resulting phenomena are similar to those of energizing a cable. The imposed wave will be reflected at the far end of the line and when the line is open at the far end (or terminated by a high impedance load for high frequencies), the reflected wave results in doubling of the amplitude as shown in Figure 18.

Copyright © 2005 IEEE. All rights reserved.
Copyright The Institute of Electrical and Electronics Engineers, Inc.
Provided by IHS under license with IEEE
No reproduction or networking permitted without license from IHS
Not for Resale

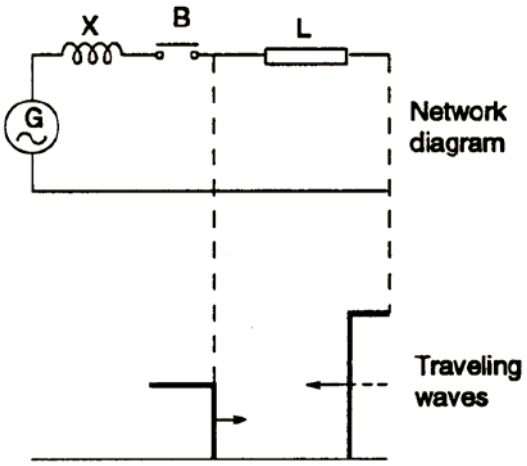

Figure 18—Energization of no-load lines: basic phenomena

An even higher voltage is obtained when the line has a trapped charge before being energized and the circuit breaker happens to close at an instant when the polarity of the network voltage is opposite to that of the voltage that was present on the line. The voltage on the line can, after reflection of the wave, theoretically be up to three times the network voltage. This situation can occur in conjunction with auto-reclosing of a line.

Even higher voltages can develop on a three-phase line, when the three circuit breaker poles are not closing simultaneously. A wave on one phase will then generate induced waves on the other phases; and under unfavorable circumstances, this situation can lead to a further rise in voltage on another phase.

An efficient way of reducing the overvoltages during energization and re-energization of no-load lines is to equip the circuit breaker with pre-insertion resistors to ensure that the closing takes place in two stages. A pre-insertion resistor is a device that connects a resistor in series with the overhead line at a predetermined time before the closing of the main contacts of the circuit breaker (see Figure 19).

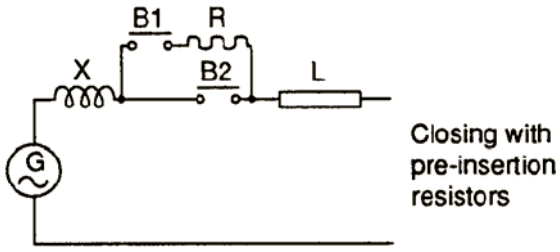

Figure 19—Pre-insertion resistors and their function

In the first stage of closing, a resistor is switched in series with the line, and a voltage division is obtained. Insertion of the resistor reduces the amplitude of the imposed wave on the line.

In the second stage, the main contacts close, and at the same time the resistor is short-circuited. The closing of the main contacts gives rise to a new wave on the line, but the amplitude of this wave is also reduced. The resistor contacts are reset (i.e., opened) before the main contacts are opened.

The optimum value of the resistance of the pre-insertion resistor is usually of the same order of magnitude as that of the surge impedance of the line. The insertion time should be 6 ms to 8 ms in order to be effective.

Copyright © 2005 IEEE. All rights reserved.

Copyright The Institute of Electrical and Electronics Engineers, Inc.
Provided by IHS under license with IEEE
No reproduction or networking permitted without license from IHS Not for Resale

Surge arresters have also been successfully used to control voltage transients when energizing transmission lines. Refer to IEEE Std C62.22™-1997 [B9].

Another way of reducing overvoltages is using controlled closing (see also 6.8).

5. General application considerations

See Clause 5 of IEEE Std C37.010.

6. Capacitance current switching application considerations

The capacitive current switching capability of the circuit breaker is dependant on its rated voltage, rated frequency, the particular application (e.g., overhead line, capacitor bank), and the grounding conditions of the network.

Caution should be exercised when applying older circuit breakers that have not been tested to IEEE Std C37.09.

6.1 Maximum voltage for application

The operating voltage should not exceed the rated maximum voltage, which is the upper limit for operation.

6.2 Frequency

The rated frequency for circuit breakers is 50 Hz or 60 Hz. As described in 4.1.1.2, a rated frequency of 60 Hz results in a more severe stress on the circuit breaker because the voltage peak occurs earlier (at 8.3 ms) than in the case of 50 Hz (at 10 ms).

Special consideration should be given when comparing tests performed at 60 Hz to cover 50 Hz requirements or vice versa. At lower frequencies, the capacitance current switching ability will be adequate. The switching capability demonstrated at 60 Hz covers the requirements for 50 Hz with the same voltage factor.

6.3 Rated capacitive current

The preferred values of the rated capacitive switching current are given in ANSI Std C37.06. Not all actual cases of capacitive current switching are covered by ANSI Std C37.06. The values for lines and cables cover most cases; the values of the current for capacitor banks (i.e., single and back-to-back) are typical and representative of actual values in service.

6.3.1 Overhead lines and cables

When very long lines and cables are considered, the no-load current may exceed that given in ANSI Std C37.06.

The following may serve as an example: The no-load current of a 550 kV overhead line is approximately 1.1 A/km at 50 Hz and 1.3 A/km for 60 Hz. Without considering the Ferranti effect (see 4.1.3.1.1), the charging current of a 500 km line would be 605 A at 50 Hz and 715 A at 60 Hz. Ferranti rise on a 500 km line would increase the charging current by about 4% at 50 Hz and 6% at 60 Hz. This case is not covered by ANSI Std C37.06.

--`,,```,,,,````-`-`,,`,,`,`,,`---
Copyright © 2005 IEEE. All rights reserved.
Copyright The Institute of Electrical and Electronics Engineers, Inc.
Provided by IHS under license with IEEE
No reproduction or networking permitted without license from IHS
Not for Resale

The higher current does not pose a problem for circuit breakers of present design, but the possible higher peak recovery voltage present on interruption could be a problem (see 4.1.3.3).

For altitudes exceeding 1000 m, the capacitive current does not have to be corrected, provided that it does not exceed the corrected rated continuous current.

6.3.2 Capacitor and filter banks

The same remark as given under 6.3.1 applies to capacitor and filter bank currents. The current is dependant on the size of the capacitor bank, and in certain cases the capacitor bank considered may have a current rating higher than that given in ANSI Std C37.06. This situation does not pose a problem for circuit breakers of present design.

6.4 Voltage and grounding conditions of the network

Subclause 4.10.7 of IEEE Std C37.09 gives the multiplication factors for single-phase tests for the different conditions (see also 4.1.4). They range from 1.0 for effectively grounded systems to 1.7 for ungrounded systems in the presence of single- or two-phase-to-ground faults.

Both user and manufacturer must be aware of these grounding conditions in order to specify the correct circuit breaker suitable for the application.

The recovery voltage of a harmonic filter bank may not follow a 1-cosine waveshape, but may include harmonic components. The recovery voltage may have a shape as indicated in Figure 20. This case needs to be considered when making the proper choice of circuit breaker. The voltage waveshape as indicated in Figure 20 might cause occasional reignitions that may be acceptable to obtain an economical solution. If they are not acceptable, a circuit breaker of higher performance should be chosen.

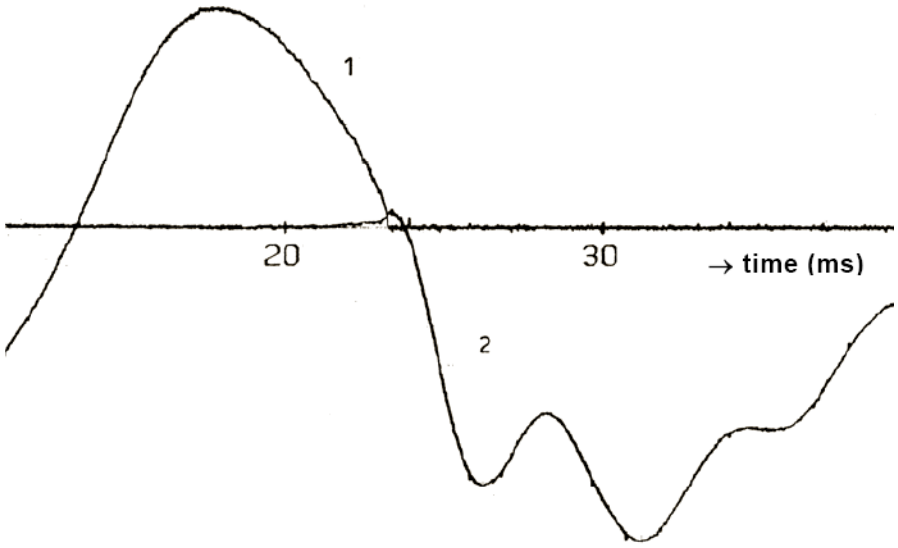

1 Current through circuit breaker
2 Voltage across circuit breaker

Figure 20—Example of the recovery voltage across a filter bank circuit breaker

Copyright © 2005 IEEE. All rights reserved.

Copyright The Institute of Electrical and Electronics Engineers, Inc.
Provided by IHS under license with IEEE
No reproduction or networking permitted without license from IHS
Not for Resale

6.5 Restrike performance

As all circuit breakers have a certain restrike probability in service, it is not possible to define a restrike-free circuit breaker. It is more logical to introduce the notion of a restrike performance (see IEEE Std C37.04a).

The level of the restrike probability depends also on the service conditions (e.g., number of operations per year, network condition, maintenance policy of the user). Therefore, it is impossible to introduce a common probability level related to service condition.

To classify their restrike performance, two classes of circuit breakers have been introduced: C1 and C2.

NOTE—It is anticipated that a class C0 will be introduced in a future revision of IEEE Std C37.04. Class C0 corresponds to the general purpose circuit breaker specified in ANSI Std C37.06. The number of restrikes should not exceed one per test shot.

6.6 Class of circuit breaker

Two classes of circuit breakers are defined for capacitive current switching in 3.4 and 3.5 of IEEE Std C37.04a.

The standard introduces the term of *restrike probability* during the type tests, corresponding to a certain probability of restrike in service, which depends on many parameters. For this reason, the term cannot be quantified in service.

The main differences between the type tests (i.e., single-phase tests) for the two classes are as follows:

- Class C1 consists of a test sequence 0/48 or 1/48 + 0/48.
- Class C2 consists of a T60 wear test before the 0/96 or 1/96 + 0/96 test sequence for line and cable charging current switching tests. For capacitor bank switching tests, the sequence is 0/168 or 1/168 + 0/168.

It must be noted that during the type tests, the number of restrikes may be influenced by the source energy, which is responsible for the possible damages within the interrupting unit.

The choices for the user between class C1 and class C2 depend on the following:

- The service conditions
- The operating frequency
- The number of circuit breakers in service, for system stability
- The consequences of any restrike for
  - The network (for cable systems, the influence of restrikes is negligible compared to the influence of restrikes in overhead transmission lines)
  - The circuit breaker (very difficult to evaluate in service)

Class C1 is acceptable for medium-voltage circuit breakers and for circuit breakers applied for infrequent switching of transmission lines and cables.

Class C2 is recommended for capacitor bank circuit breakers and for circuit breakers used on frequently switched transmission lines and cables.

NOTE—The class C0 anticipated to be introduced in a future revision of IEEE Std C37.04 is acceptable for medium-voltage applications where restrikes are not a concern.

--`,,```,,,,````-`-`,,`,,`,`,,`---
Copyright © 2005 IEEE. All rights reserved.
Copyright The Institute of Electrical and Electronics Engineers, Inc.
Provided by IHS under license with IEEE
No reproduction or networking permitted without license from IHS
Not for Resale

6.7 Interrupting time

The interrupting time of a circuit breaker on capacitive current switching is the interval between the energizing of the trip circuit at rated control voltage and the interruption of the main circuit in all poles on an opening operation. For some circuit breakers, the time required for interruption of capacitive currents may be greater than the rated interrupting time (e.g., oil circuit breakers). For circuit breakers equipped with opening resistors, the interrupting time of the resistor current may be longer. Note also that the interrupting time may be longer for close-open operations (see 5.7 of IEEE Std C37.010).

6.8 Transient overvoltages and overvoltage limitation

An important consideration for application of circuit breakers for capacitive current switching is the transient overvoltage that may be generated by restrikes during the opening operation. The transient overvoltage factor is defined as the ratio of the transient voltage appearing between a circuit-breaker-disconnected terminal and the neutral of the disconnected capacitance during opening to the operating line-to-neutral crest voltage prior to opening.

The selection of the class (see 6.6) of circuit breaker to be applied should be coordinated with the insulation capability of other components on the system.

6.8.1 Overvoltages

When switching capacitive currents, transients are generated. These transients are associated with the restrikes that may occur when de-energizing a capacitive load and with the energization of capacitive loads. These transients may cause any of the following:

- Insulation degradation and possible failure of substation equipment
- Operation of surge arresters
- Interference in the control wiring of substations
- Increase in step potentials in substations
- Undesired tripping or damage to sensitive electronic equipment

The magnetic fields associated with high inrush currents during back-to-back switching in either the no-load transmission line conductors or the grounding grid during back-to-back switching can induce voltages in control cables by both capacitive and electromagnetic coupling. These induced voltages can be minimized by shielding the cables and using a radial configuration for circuits (i.e., circuits completely contained within one cable so that inductive loops are not formed).

6.8.1.1 Switching of capacitor banks

The switching of capacitor banks is associated with voltage and current transients (see 4.1.1 and 4.2.1). As most modern circuit breakers have a very low probability of restrike, the majority of the switching transients will be generated when energizing capacitor bank(s). The effects of the transients will exhibit themselves locally and at remote locations on the power system.

The high-frequency transient inrush current associated with back-to-back switching can stress other equipment in the circuit as well as the circuit breaker. Wound-type current transformers will have turn-to-turn insulation stressed because of the high rates of rise of current and the resulting voltage that is developed across inductance in the circuit.

Copyright © 2005 IEEE. All rights reserved.

Copyright The Institute of Electrical and Electronics Engineers, Inc.
Provided by IHS under license with IEEE
No reproduction or networking permitted without license from IHS Not for Resale

6.8.1.1.1 Local effects

Local effects of the transients include the following:

— Voltage transients resulting in dielectric stresses on nearby equipment

— Electrical, mechanical, and electromechanical forces caused by the inrush current

6.8.1.1.2 Remote effects

Remote effects of the transients include the following:

— Transfer of capacitively coupled fast transients through transformer windings

— Reflections of traveling wave transients on open-ended lines or transformer-terminated lines

— Excitation of near resonant portions of the power system by the oscillatory transient frequency

6.8.1.2 Switching of lines and cables

When energizing lines and cables, high overvoltages may be created depending on whether the line or cable was precharged as a result of a preceding breaking operation (i.e., in the case of an auto-reclosing). These overvoltages may result in damage of insulation.

6.8.2 Overvoltage limitation

Several means are available to reduce the overvoltages generated by the switching of capacitive currents:

— **Current-limiting reactors** are normally used to reduce the current transients associated with back-to-back switching. They do not limit the remote overvoltages.

— **Pre-insertion resistors** limit the inrush current and remote overvoltages. It is a basic solution widely used on transmission circuit breakers. They are usually fitted on circuit breakers and as such add to the complexity of the equipment. Depending on the design, the added complexity may or may not result in a reduced availability of the equipment (see also 6.16).

— **Pre-insertion reactors** also limit the inrush current and remote overvoltages. They are usually fitted on circuit switchers, and their effect on complexity and availability of the equipment is sometimes equivalent to pre-insertion resistors, depending on the design of the devices.

— **Controlled closing** reduces the magnitude of the inrush current depending on the point-on-wave of the voltage prior to the prestrike between the contacts. A simple way of reducing the transients is to let the circuit breaker contacts close at a voltage zero. This method is called *controlled closing*. The controller also adds to the complexity of the equipment and can influence its availability.

6.9 No-load overhead lines

A circuit breaker may be required to energize or de-energize a no-load transmission line during its normal operating duties. Prior to energization, the line may or may not contain a trapped charge (see also 4.1.3). Consideration may need to be given to line energization following load rejection (see CIGRE Technical Brochure 47 [B1]).

6.9.1 Line charging current

When considering the assigned line charging current rating, application is determined by the value of the line charging current. This current is a function of system voltage, line length, and line configuration.

Figure 21 gives an approximation of the line charging current per kilometer of different line configurations at 60 Hz. If the estimated current is greater than 90% of the preferred line current rating, a more accurate

Copyright © 2005 IEEE. All rights reserved.
Copyright The Institute of Electrical and Electronics Engineers, Inc.
Provided by IHS under license with IEEE
No reproduction or networking permitted without license from IHS Not for Resale

calculation based on the actual line configuration and methods similar to that discussed in Gabrielle, et al. [B6] should be used.

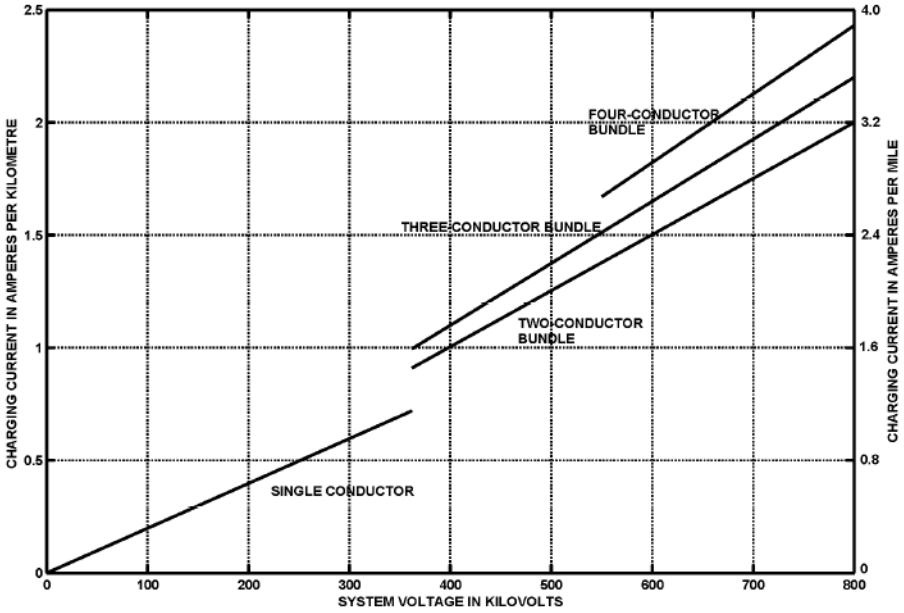

Figure 21—RMS charging current versus system voltage for different line configurations at 60 Hz

From Figure 21, the capacitive reactance can be derived as follows:

Assume a system with a rated voltage of 245 kV, 60 Hz. The charging current is 0.5 A/km.[7] The linear capacitive reactance X_C' is then

$$X_C' = \frac{1}{\omega C'} = \frac{U}{I'} = \frac{245000\ \text{V}}{\sqrt{3} \times 0.5\ \text{A/km}} = 0.283\ \text{M}\Omega\ \text{km} \quad [8]$$

where

X_C' is the linear capacitive reactance of the line (MΩ km)
C' is the capacitance of the line (F/km)
I' is the charging current of the line (A/km)

For a 50 Hz system, frequency the corresponding value of X_C' would be

$$0.283 \times \frac{60}{50} = 0.34\ \text{M}\Omega\ \text{km} \quad [9]$$

To calculate the reactance X_C of a line with a given length l, the linear reactance X_C' has to be divided by the length

$$X_C = \frac{X_C'}{l}$$

[7] 0.8 A/mi
[8] 0.177 MΩ mi
[9] 0.21 MΩ mi

Copyright © 2005 IEEE. All rights reserved.

Copyright The Institute of Electrical and Electronics Engineers, Inc.
Provided by IHS under license with IEEE
No reproduction or networking permitted without license from IHS
Not for Resale

Assume a length of 100 km for the example above. The reactance X_C is then

$$X_C = \frac{X_C'}{l} = \frac{0.283\ \text{M}\Omega\text{km}}{100\ \text{km}} = 2.83\ \text{k}\Omega$$

6.9.2 Compensated overhead lines

As described in 4.1.3.2, very long lines (> 200 km) are often compensated with shunt reactors to reduce the amount of charging current required of the system.

If the circuit breaker rating is chosen based on I_{lc}, the line could not be switched without the compensating reactor(s) connected. The voltage rise caused by the Ferranti effect and also the location of the reactor(s) will change the line current slightly.

6.9.3 No-load line recovery voltage

The line charging breaking current rating is assigned on the basis of a standard recovery voltage associated with this type of circuit. For effectively grounded systems, the no-load line charging current switching tests require a maximum voltage of 2.4 times (see also 4.1.3.1.2) the rated phase-to-ground voltage across the circuit breaker one half-cycle after interruption (assumes $C_1 = 2C_0$ where C_1 is the positive-sequence capacitance and C_0 is the zero-sequence capacitance). This voltage is the differential voltage of the source and line sides, including the effects of coupled voltage on the first pole-to-clear. The test voltage requires a 1-cosine waveshape.

For double circuit lines with higher voltage factors, refer to 4.1.4.

Deviations from the test voltage characteristics may increase or decrease the probability that the circuit breaker will restrike. As described in 4.1.3.2, a compensated line will have a lower peak of the recovery voltage, which will reduce the restrike probability.

6.10 Capacitor banks

A circuit breaker may be required to switch a capacitor bank from a bus that does not have other capacitor banks energized (i.e., single or isolated) or against a bus that has other capacitor banks energized (i.e., back-to-back). In the application of circuit breakers for capacitor bank switching duty, consideration must be given to the rated isolated shunt capacitor bank switching current, rated back-to-back shunt capacitor bank switching current, rated transient inrush current, and rated transient inrush current frequency (see also 4.1.1 and 4.2.1).

6.10.1 Capacitor bank current

Circuit breakers are to be applied according to the actual capacitive current they are required to interrupt. The rating should be selected to include the following effects:

— *Voltage.* The reactive power rating of the capacitor bank, in kilovoltamperes reactive, is to be multiplied by the ratio of the maximum service voltage to the capacitor bank nameplate voltage when calculating the capacitive current at the applied voltage. This ratio can be as large as 1.1 because capacitors can be operated continuously up to 10% above the capacitor rated voltage.

— *Capacitor tolerance.* The manufacturing tolerance in capacitance is -0 to +15% with a more frequent average of -0 to +5%. A multiplier in the range of 1.05 to 1.15 should be used to adjust the nominal current to the value allowed by tolerance in capacitance.

Copyright © 2005 IEEE. All rights reserved.
Copyright The Institute of Electrical and Electronics Engineers, Inc.
Provided by IHS under license with IEEE
No reproduction or networking permitted without license from IHS
Not for Resale

— *Harmonic component.* Capacitor banks provide a low-impedance path for the flow of harmonic currents. When capacitor banks are ungrounded, no path is provided for zero-sequence harmonics (e.g., third, sixth, ninth), and the multiplier for harmonic currents is less. A multiplier of 1.1 is generally used for an effectively grounded neutral bank and 1.05 for an ungrounded neutral.

In the absence of specific information on multipliers for the above factors, it will usually be conservative to use a total multiplier of 1.25 times the nominal capacitor current at rated capacitor voltage for ungrounded neutral operation and 1.35 times the nominal current for effectively grounded neutral operation.

6.10.2 Methods for calculating transient inrush currents

6.10.2.1 Single or isolated capacitor bank

A bank of shunt capacitors is considered isolated when the conditions described in 4.2.1.1 are fulfilled.

Table 2 gives the equations that apply for calculation of the inrush current for isolated capacitor bank energization.

Table 2—Inrush current and frequency for switching capacitor banks

Condition	Quantity	When using currents
Energizing an isolated bank	$i_{\text{i peak}}$ (A)	$1.4142\sqrt{I_{\text{sc}} \times I_1}$
	f_{i} (Hz)	$f_{\text{s}}\sqrt{\frac{I_{\text{sc}}}{I_1}}$
Energizing a bank with another on the same bus	$i_{\text{i peak}}$ (A)	$13\,500\sqrt{\frac{U_{\text{r}} I_1 I_2}{f_{\text{s}} L_{\text{eq}} (I_1 + I_2)}}$
	f_{i} (kHz)	$9.5\sqrt{\frac{f_{\text{s}} U_{\text{r}} (I_1 + I_2)}{L_{\text{eq}} (I_1 \times I_2)}}$
Energizing a bank with an equal bank energized on the same bus	$i_{\text{i peak}}$ (A)	$9545\sqrt{\frac{U_{\text{r}} I_1}{f_{\text{s}} L_{\text{eq}}}}$
	f_{i} (kHz)	$13.5\sqrt{\frac{f_{\text{s}} U_{\text{r}}}{L_{\text{eq}} I_1}}$

where

f_{s} is the system frequency (Hz).

L_{eq} is the total equivalent inductance per phase between capacitor banks (μH).

I_1, I_2 is the currents (A) of banks being switched and of bank already energized, respectively. Capacitor bank being switched is assumed uncharged, with closing at a voltage crest of the source voltage. The current used should include the effect of operating the capacitor bank at a voltage above nominal rating of the capacitors and the effect of a positive tolerance of capacitance. In the absence of specific information, a multiplier of 1.15 times normal capacitor current would give conservative results.

$I_{\text{i peak}}$ is the peak value (A) calculated without damping. In practical circuits, it will be about 90% of this value.

U_{r} is the rated voltage (kV, rms).

I_{sc} is the symmetrical rms short-circuit current (A, rms).

--`,,```,,,,````-`-`,,`,,`,`,,`---
Copyright © 2005 IEEE. All rights reserved.

Copyright The Institute of Electrical and Electronics Engineers, Inc.
Provided by IHS under license with IEEE
No reproduction or networking permitted without license from IHS Not for Resale

6.10.2.2 Back-to-back capacitor bank

The inrush current of a single bank will be increased when other capacitor banks are connected to the same bus (see also 4.2.1.2).

Table 2 gives the equations for calculating inrush current and frequency for both isolated and back-to-back capacitor bank switching, neglecting resistance. These equations are based on the theory described in 4.2.1.

A typical circuit for back-to-back switching is shown in Figure 22. The inductance in the circuit that limits the transient oscillatory current is composed of the inductance of the bus between switching devices, L_{bus}; the inductance between the switching device and the capacitor banks, L_1 and L_2, and the inductance of the capacitor banks, L_{c1} and L_{c2}; and any additional reactance inserted. The total inductance between capacitor banks, $L_{c1} + L_1 + L_{bus} + L_2 + L_{c2}$, is very small with respect to the inductance of the source, L_s. In most cases, the total inductance between capacitor banks will be less than 1% of the inductance of the source, and the contribution of transient current from the source can be neglected.

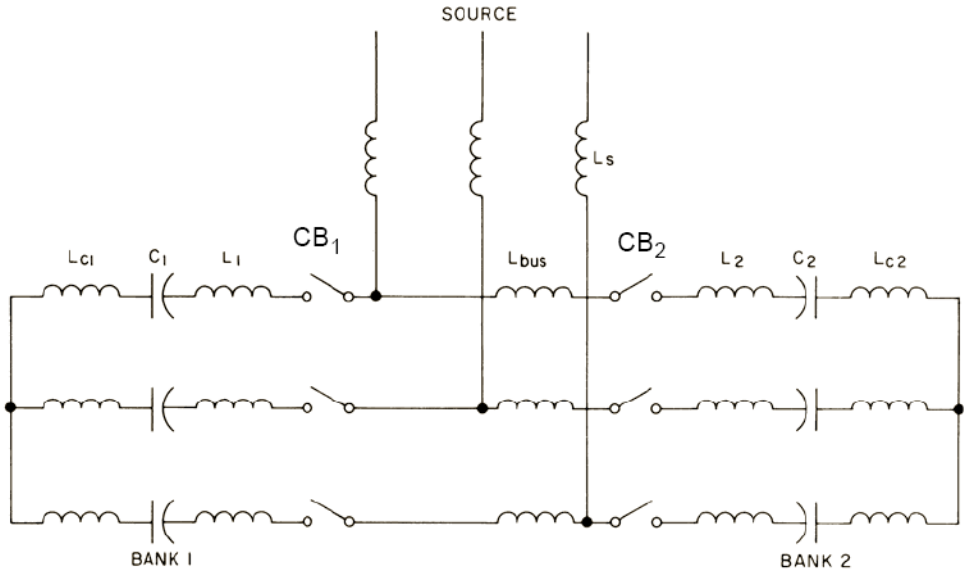

CB_1	Circuit breaker energizing capacitor bank 1
CB_2	Circuit breaker energizing capacitor bank 2
L_S	Source inductance
L_{C1}, L_{C2}	Capacitor bank inductance
L_1, L_2	Bus inductance between switching device and capacitor bank
L_{bus}	Inductance of bus between switching devices

Figure 22—Typical circuit for back-to-back switching

The inductance of the bus can be calculated similarly to calculating inductance of a transmission line using values from tables available from suppliers of bus conductors for different bus configurations. (See 6.10.2.3.)

The inductance within the capacitor bank itself is not easy to obtain, but in general it is of the order of 10 μH for banks above 52 kV and 5 μH for banks below 52 kV. Typical values of inductance per phase between back-to-back capacitor banks and bank inductance for various voltage levels are given in Table 3.

Copyright © 2005 IEEE. All rights reserved.
Copyright The Institute of Electrical and Electronics Engineers, Inc.
Provided by IHS under license with IEEE
No reproduction or networking permitted without license from IHS
Not for Resale

Table 3—Typical values of inductance between capacitor banks

Rated maximum voltage (kV)	Inductance per phase of busbar (μH/m)	Typical inductance between banks[a] (μH)
17.5 and below	0.702	10–20
36	0.781	15–30
52	0.840	20–40
72.5	0.840	25–50
123	0.856	35–70
145	0.856	40–80
170	0.879	60–120
245	0.935	85–170

[a]Typical values of inductance per phase between capacitor banks. This value does not include inductance of the capacitor bank itself. Values of 5 μH for banks below 52 kV and 10 μH for banks above 52 kV are typical for the inductance of the capacitor banks.

Inherent resistance of the circuit causes rapid decay of the transient current so that the first peak actually may only reach 90% to 95% of the maximum value calculated. These values are applicable to both effectively grounded or ungrounded banks and with wye or delta connections. With an ungrounded neutral, the current in the first two phases to close will be 87% of calculated, but the current in the last phase will equal the value calculated. However, inherent resistance of the circuit will affect these currents by the factors indicated above in this subclause.

The equations in Table 2 for back-to-back switching will give correct results when switching a bank against another bank. However, when switching against several other banks connected to the bus, the correct value of equivalent inductance to be used for the combination of banks connected to the bus is not easily obtained. For example, when switching a bank against three other banks energized on the bus, the calculated current will be too high if an inductance of $L/3$ is used. On the other hand, using a value of $3L$ will result in a current that is too low. If exact solutions cannot be made, conservative results should be used in calculating inrush currents by using the inductance divided by the number of capacitor banks, recognizing that the results will be 20% to 30% higher (see also 4.2.1.2).

6.10.2.3 Considerations for transient inrush currents

The inrush currents of different types of compact multisection banks with minimum spacing between the individual sections may differ by as much as 20%. Consequently, these inrush currents can be reduced significantly by increasing the lengths (i.e., inductance) of the circuits between the sections.

Another effective measure to reduce transient inrush currents is to add inductance in the circuit between the capacitor banks.

The capability of circuit breakers to handle inrush current is often expressed in terms of the product of inrush current peak times the inrush current frequency, $i_{\mathrm{i\,peak}} \times f_{\mathrm{i}}$ (kAkHz).

Although circuit breakers have usually been tested with inrush currents up to 25 kA_{peak} and 4 kHz, system designers should endeavor to keep the inrush currents far below this value for system quality reasons.

The following example will illustrate the use of the equations in Table 2.

A 115 kV system is assumed as shown in Figure 23.

Copyright © 2005 IEEE. All rights reserved.

Copyright The Institute of Electrical and Electronics Engineers, Inc.
Provided by IHS under license with IEEE
No reproduction or networking permitted without license from IHS
Not for Resale

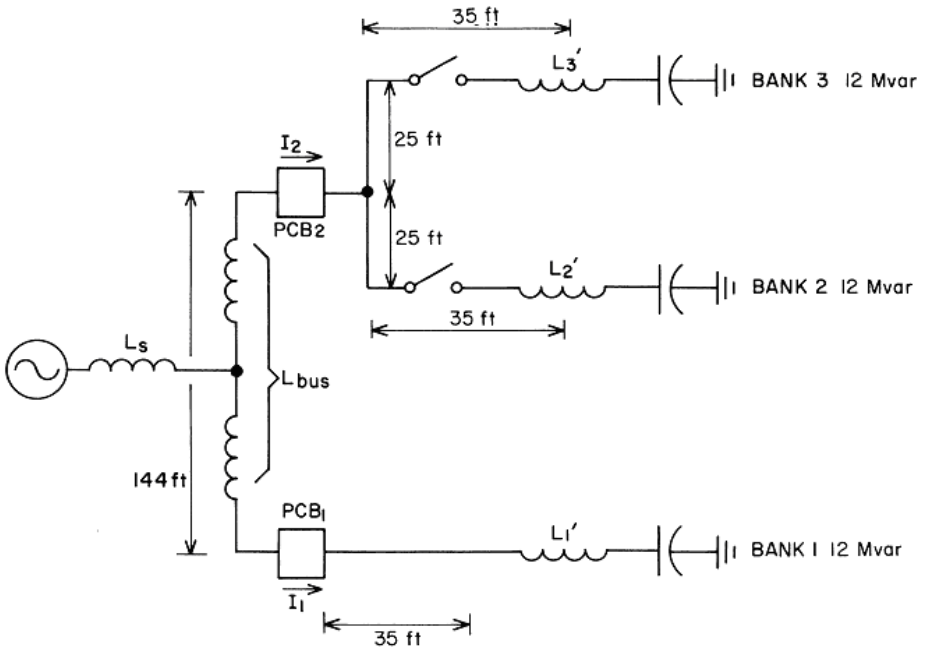

U_r	123 kV (115 kV nominal voltage)
L_S	Source inductance, = 3.77 Ω, 10 mH (f_S = 60 Hz)
L_1', L_2', L_3'	Inductance between circuit breaker and capacitor bank, including inductance of capacitor bank
L_{bus}	Inductance of bus between switching devices
PCB_1, PCB_2	Circuit breakers
	Short circuit of source: 18.6 kA at 123 kV

Figure 23—Example of 115 kV system

The capacitor banks shown in Figure 23 have a nominal rating of 12 MVAr (i.e., capacitors rated 100 kVAr, 13.28 kV, five series sections with eight capacitors in parallel). Nominal current per bank is 60 A. In determining the rating of the circuit breaker required, the increase in current due to applied voltage, capacitance tolerance, and harmonics should be considered. The increase in current at maximum rated voltage is as follows: maximum voltage to capacitor rated voltage = 123/115 = 1.07. Assume a positive tolerance of capacitors of +10%, a multiplier of 1.1, and a multiplier for harmonic content for an effectively grounded neutral bank of 1.1.

The total multiplier used to determine the isolated and back-to-back current rating is $1.07 \times 1.1 \times 1.1 = 1.29$, giving a current of $1.29 \times 60 = 78$ A. With capacitor banks 2 and 3 energized, the current through PCB_2 is 156 A.

The circuit breakers intended for this duty have the following ratings: rated voltage 123 kV, rated current 1600 A, rated short-circuit current 40 kA, and rated isolated and back-to-back capacitive switching current 400 A.

The transient inrush current and frequency are calculated using the equations in Table 2. In the example, L_1', L_2', and L_3' are the inductances between the respective capacitor banks and the circuit breakers, including the inductance of the capacitor bank. L_{bus} is the inductance of the bus between the circuit breakers.

Copyright © 2005 IEEE. All rights reserved.
Copyright The Institute of Electrical and Electronics Engineers, Inc.
Provided by IHS under license with IEEE
No reproduction or networking permitted without license from IHS
Not for Resale

The inductance values in Table 3 can be used, or values can be calculated for the actual bus configuration used. In the following examples, the added reactance between the circuit breaker and capacitor bank is

$L_1' = 20.0\ \mu H$

$L_2' = L_3' = 27.1\ \mu H$

The reactance of the busbar L_{bus} is 37.6 μH.

In determining inrush current and frequency, the currents I_1 and I_2 as used in Table 2 should include the effect of operating the capacitor bank at a voltage above nominal rating of the capacitors and the effect of a positive tolerance of capacitance. In the examples, the multiplier to be used is $1.07 \times 1.1 = 1.18$. The currents are $I_1 = 60 \times 1.18 = 71$ A and $I_2 = 71$ A or 142 A, depending on whether bank 2, bank 3, or both, are energized.

Case I. Energization of capacitor bank 1 with banks 2 and 3 not energized (i.e., single or isolated bank switching).

$$i_{i\,peak} = 1.4142\sqrt{I_{sc} \times I_1} = 1.4142\sqrt{18\,600 \times 71} = 1.4142\sqrt{132 \times 10^4} = 1625\ A$$

$$f_i = f_s\sqrt{\frac{I_{sc}}{I_1}} = 60\sqrt{\frac{18\,600}{71}} = 971\ Hz$$

The calculated rate of change of current for the isolated bank switching is

$$\left(\frac{di_i}{dt}\right)_{max} = 2\pi f_i i_{i\,peak} = 2\pi \times (971\ Hz) \times (1625\ A) = 9.9\ A/\mu s$$

This value is less than the maximum rate of change for a rated short-circuit current of 40 kA, which is equal to $2\pi f_s \sqrt{2} I_{sc} = 21.3$ A/μs and, therefore, meets the requirements of isolated capacitor bank switching.

Case II. Energization of bank 1 with bank 2 energized on the bus (i.e., back-to-back switching against an equal-size bank).

$$i_{i\,peak} = 9545\sqrt{\frac{U_r I_1}{f_s L_{eq}}}$$

The equivalent inductance L_{eq} is the sum of $L_1' + L_{bus} + L_2' = (20.0 + 37.6 + 27.1)\ \mu H = 84.7\ \mu H$.

$$i_{i\,peak} = 9545\sqrt{\frac{123 \times 71}{60 \times 84.7}} = 9545\sqrt{1{,}7184} = 12\,512\ A_{peak}$$

$$f_i = 13.5\sqrt{\frac{f_s U_r}{L_{eq} I_1}} = 13.5\sqrt{\frac{60 \times 123}{84.7 \times 71}} = 15.0\ kHz$$

The calculated back-to-back inrush current and frequency must be compared with the back-to-back switching capability listed in ANSI Std C37.06. For a maximum voltage of 123 kV, the assumed rated values are 20 kA_{peak} and 4.25 kHz. The calculated value of the inrush current peak is within this rating, the inrush

Copyright © 2005 IEEE. All rights reserved.

Copyright The Institute of Electrical and Electronics Engineers, Inc.
Provided by IHS under license with IEEE
No reproduction or networking permitted without license from IHS Not for Resale

current frequency exceeds that assumed, and inductance must be added between the capacitor banks to reduce the inrush current frequency. Adding an inductance of 1 mH will limit the inrush current to approximately 3.5 kA_{peak} and the frequency to approximately 4.18 kHz, both of which are below the assumed capability.

Case III. Energization of bank 1 with banks 2 and 3 energized on the bus.

For this case, assume the equivalent inductance of banks 2 and 3 equal to one half of L_2' or (27.1)/2 = 13.6 μH. The total current of banks 2 and 3 is 142 A, which is under the assumed isolated bank switching capability of 400 A as listed in ANSI Std C37.06. For this case, I_1 = 71 A, I_2 = 142 A, and the equivalent inductance between the capacitor bank being energized and the banks already energized is the sum of $L_2'/2 + L_{bus} + L_1'$ = 13.6 + 37.6 + 20 = 71.2 μH.

$$i_{i\,peak} = 13\,500\sqrt{\frac{U_r(I_1 \times I_2)}{f_s L_{eq}(I_1 + I_2)}} = 13\,500\sqrt{\frac{123 \times 71 \times 142}{60 \times 71.2 \times 213}} = 15\,760 \text{ A}$$

$$f_i = 9.5\sqrt{\frac{f_s U_r (I_1 + I_2)}{L_{eq}(I_1 \times I_2)}} = 9.5\sqrt{\frac{60 \times 123 \times 213}{71.2 \times 71 \times 142}} = 14.1 \text{ kHz}$$

The calculated values of inrush current and frequency of 15.76 kA and 14.1 kHz exceed the assumed back-to-back switching capability of 20 kA and 4.25 kHz listed in ANSI Std C37.06. As in the previous case of switching identical banks, adding an inductance will limit the inrush current and frequency. An additional inductance of 0.71 mH will limit the inrush current to approximately 4.7 kA_{peak} and a frequency of 4.24 kHz, both of which are below the assumed back-to-back switching capability of a 123 kV circuit breaker.

Based on the system and conditions studied, a circuit breaker having the following ratings would be applied: rated short-circuit current of 40 kA and rated isolated capacitor bank switching current of 400 A. The assumed back-to-back rating of 20 kA and 4250 Hz that goes with this rating will be exceeded unless additional inductance is added between the capacitor banks. A value of 0.71 mH is sufficient to keep within the assumed ratings available.

6.11 Cables

In the application of circuit breakers for cable switching duty, consideration must be given to the rated isolated cable switching current, the rated back-to-back cable switching current, and the rated transient inrush current, both amplitude and frequency.

6.11.1 Cable inrush current

Table 4 gives a summary of the equations that are applicable for the different configurations.

For proper circuit breaker application, f_{eq} should be less than the rated inrush current frequency. Additional inductance may be added in series with the inductances making up L to meet the rated inrush frequency requirement. Such inrush reactors are common.

6.11.2 Alternate configurations

Other combinations of circuit elements can produce inrush currents associated with cable switching. For example, a cable can be switched from a bus that has a capacitor bank connected as shown in 4.2.2.3.3.

--`,,```,,,,````-`-`,,`,,`,`,,`---
Copyright © 2005 IEEE. All rights reserved.
Copyright The Institute of Electrical and Electronics Engineers, Inc.
Provided by IHS under license with IEEE
No reproduction or networking permitted without license from IHS
Not for Resale

Table 4—Frequency and current amplitude relations

Condition	Quantity	When using surge impedance
Energizing an isolated cable	$i_{\text{i peak}}$	$\frac{u_{\text{m}} - u_{\text{t}}}{Z}$
	f_{eq}	$f_{\text{s}}\left[\frac{\sqrt{2}I_{\text{sc}}}{I_{\text{MR}}}\right]$
Energizing a cable with another on the same bus	$i_{\text{i peak}}$	$\frac{u_{\text{m}} - u_{\text{t}}}{Z_1 + Z_2}$
	f_{eq}	$f_{\text{s}}\left[\frac{u_{\text{m}} - u_{\text{t}}}{\omega(L_1 + L_2)I_{\text{MR}}}\right]$
Energizing a cable with an equal cable energized on the same bus	$i_{\text{i peak}}$	$\frac{u_{\text{m}} - u_{\text{t}}}{2Z}$
	f_{eq}	$f_{\text{s}}\left[\frac{u_{\text{m}} - u_{\text{t}}}{\omega(L_1 + L_2)I_{\text{MR}}}\right]$

For application, the peak inrush current should be checked against the rated value for the circuit breaker in question.

Many other combinations of banks, cables, and lines will occur in practice. For example, a cable may be used to exit from a substation and then connect to an overhead line after a short distance. One possible approach when considering circuits of this type is to compare the relative contributions of the cable and the line. For short cable runs, this circuit could be considered the equivalent of a line with a capacitor to ground replacing the cable. Similar simplifications can be used for other configurations.

6.12 Switching through transformers

Circuit breakers may be required in some applications to switch capacitors, lines, or cables through an interposed transformer. The current switched by the circuit breaker will be *N* times the capacitor, line, or cable current on the other side of the transformer, where *N* is the transformer turns ratio.

Switching charging current through a transformer may be less difficult than switching the same current directly. The capacitive elements of the circuit will oscillate with the transformer inductance, which may also saturate. Switching through a transformer results in a less severe recovery voltage and a lower probability of restrike. If a restrike should occur, the additional inductance will help to limit the inrush current.

If the value of *N* is greater than 1, switching through a transformer will have the effect of increasing the current being switched. De-energizing no-load overhead lines with lower voltage circuit breakers can result in effective line charging currents in the 750–1000 A range. The capacitive switching rating of circuit breakers that may be exposed to this type of duty must be carefully checked before application is made.

Voltage and current relations are shown in Figure 24 as an example of capacitor switching through an interposed transformer. It can be seen that due to the reduced recovery voltage, the increased current is not a problem for the circuit breaker.

Copyright © 2005 IEEE. All rights reserved.

Copyright The Institute of Electrical and Electronics Engineers, Inc.
Provided by IHS under license with IEEE
No reproduction or networking permitted without license from IHS
Not for Resale

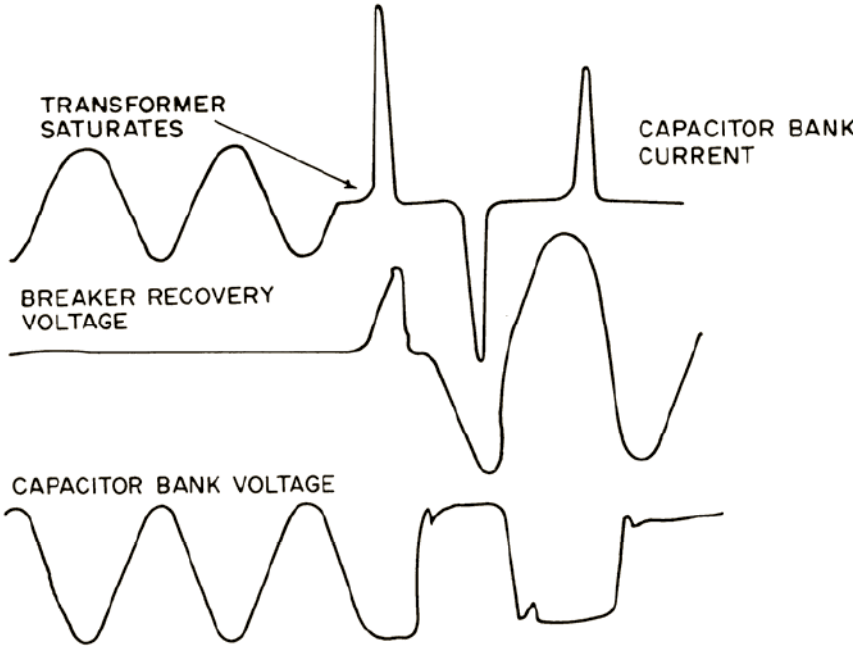

Figure 24—Voltage and current relations for capacitor switching through interposed transformer

6.13 Unusual circuits

In the application of circuit breakers in stations having banks of capacitors, it may be necessary to investigate the effects of transient currents and other special situations upon circuit breakers other than those specially equipped for and assigned to the routine capacitor switching.

The transient currents of capacitor banks may be considered in two aspects: the inrush currents upon energizing of the banks and the discharge currents into faults. Where the quantity of parallel capacitor banks installed in a station is large, the transient currents may have significant effects upon the circuit breaker.

The transient currents may have large peaks and high frequencies that may affect circuit breakers in the following ways:

a) A circuit breaker may be subjected to a transient inrush current that exceeds its rating. This case may occur with the circuit breaker in the closed position or when closing into effectively grounded faults.

b) The transient inrush current may have sufficient magnitude and rate of change to flash over the secondaries of linear couplers (i.e., a transducer having a linear relationship between input and output), or bushing current transformers as used in dead tank circuit breakers, or the associated control wiring.

There are also special situations that may arise in fault switching sequences where circuit breakers in a station other than those assigned to the capacitive switching duty may get involved in unplanned clearing of energized parallel banks. Subclauses 6.13.1, 6.13.2, and 6.13.3 are intended to guide the engineer either to take the required corrective measures or to avoid the problems.

Copyright © 2005 IEEE. All rights reserved.
Copyright The Institute of Electrical and Electronics Engineers, Inc.
Provided by IHS under license with IEEE
No reproduction or networking permitted without license from IHS
Not for Resale

6.13.1 Exposure to transient inrush currents

Circuit breakers located in a position such as a tie circuit breaker between bus sections (i.e., bus section or bus coupler) may be exposed to the transient inrush currents from energizing banks of capacitors when they are located on bus sections on both sides of the circuit breaker (see Figure 25, CB_1).

Seldom will the inrush current exceed the capability of the circuit breaker. However, a check may be required to determine whether the rate of change of inrush current will cause overvoltages on the secondary of linear couplers or current transformers on the circuit breaker or in the current path between the capacitor banks.

NOTE—Appropriately sized metal oxide varistors can be used to clamp these secondary overvoltages.

With linear couplers, the secondary voltage induced across the terminals from the transient capacitive current is proportional to the frequency and to the amplitude of this current as shown in the following equation:

linear coupler secondary volts (crest) = (linear coupler ratio) ×
(transient frequency)/(system frequency) × (crest transient current)

The following example will illustrate the use of the above equation:

Linear coupler ratio	5 V per 1000 primary A
Frequency of transient inrush current	5400 Hz
Crest of transient inrush current	30 000 A
System frequency	60 Hz
Linear coupler secondary volts (crest)	$\frac{5}{1000} \times \frac{5400}{60} \times 30\,000 = 13\,500$ V

The manufacturer's voltage limits for linear couplers should not be exceeded.

With a bushing current transformer (BCT), the voltage developed in the secondary circuit is also proportional to the frequency and the amplitude of the transient inrush current, as shown in the following equation:

voltage in BCT secondary (crest) = 1/(BCT ratio) × (crest transient current) ×
(relay reactance) × (transient frequency)/(system frequency)

The following example will illustrate the use of the above equation:

Bushing current transformer ratio	1000/5
Frequency of transient inrush current	5400 Hz
Crest of transient inrush current	30 000 A
Relay reactance burden at 60 Hz	0.3 Ω
System frequency	60 Hz
Voltage in BCT secondary (crest)	5/1000 × 30 000 × 0.3 × 5400/60 = 4050 V

The secondary voltage should not exceed the values specified in the relevant transducer standard.

6.13.2 Exposure to total capacitor bank discharge current

In a substation where parallel capacitor banks are located near or on a busbar, any circuit breaker connected to the bus may be exposed during faults to the total discharge current of all the banks located behind the circuit breaker. In Figure 25, CB_2 will be subjected to this total discharge current with a fault occurring at

Copyright © 2005 IEEE. All rights reserved.

Copyright The Institute of Electrical and Electronics Engineers, Inc.
Provided by IHS under license with IEEE
No reproduction or networking permitted without license from IHS
Not for Resale

location A. The worst case, or highest capacitor discharge current, occurs with a bolted three-phase fault where capacitor banks are ungrounded and with a three-phase-to-ground or a line-to-ground fault where capacitor banks are effectively grounded.

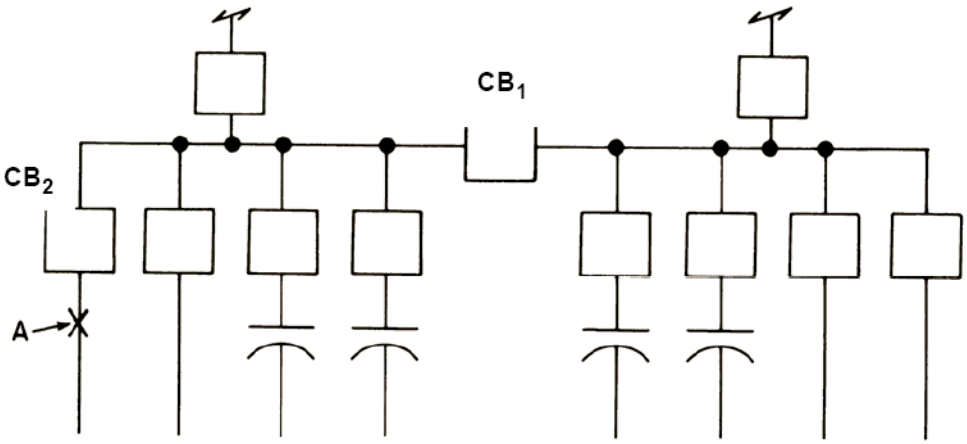

Figure 25—Station illustrating large transient inrush currents through circuit breakers from parallel capacitor banks

The total discharge current (peak) of all banks behind the circuit breaker is equal to the algebraic sum of the individual banks of capacitors. Neglecting resistance, the discharge current of an individual capacitor bank is equal to Equation (41).

$$i_{\text{d peak}} = \frac{\sqrt{2}}{\sqrt{3}} U_{\text{r}} \sqrt{\frac{C}{L}} \tag{41}$$

where

$i_{\text{d peak}}$ is the crest value of discharge current (A)
U_{r} is the rated voltage (V, rms)
C is the capacitance per phase of individual bank (F)
L is the inductance per phase (H) between capacitor bank and fault location

The inductance L is primarily made up of bus conductors and any additional inductance added to the bank for limiting the inrush currents.

If there are n capacitor banks of approximately equal capacitance and separated by an approximately equal inductance to the fault, then the total discharge current is approximately equal to the sum of the crest current of each bank or n times that of one bank. This is shown in Equation (42).

$$i_{\text{d peak}} = \frac{\sqrt{2}}{\sqrt{3}} U_{\text{r}} \sqrt{\frac{Cn}{L/n}} = \frac{\sqrt{2}}{\sqrt{3}} U_r n \sqrt{C/L} \tag{42}$$

In addition to the checking of the crest current, it may be necessary also to check the rate of change of the discharge current with the manufacturer.

The transient discharge current passing through a circuit breaker must also be examined for its effects upon the linear couplers and bushing current transformers. The discharge currents may substantially exceed the magnitudes and the frequency of the inrush currents described in 6.13.1 because the contribution may come from a number of capacitor banks and is not limited by the inrush impedance seen when energizing a bank of

Copyright © 2005 IEEE. All rights reserved.
Copyright The Institute of Electrical and Electronics Engineers, Inc.
Provided by IHS under license with IEEE
No reproduction or networking permitted without license from IHS
Not for Resale

capacitors. The equations given in 6.13.1 for determining the induced voltages in the linear couplers or in bushing current transformers also may be used for determining the effects of the discharge currents.

6.13.3 Exposure to capacitive switching duties during fault switching

Where parallel banks of capacitors are located on bus sections in a station, caution must be exercised in the fault switching sequence so that the last circuit breaker to clear is not subjected to a capacitive switching duty beyond its capability. This is especially a concern for a circuit breaker used as a bus section tie circuit breaker with capacitors located on both sides of the circuit breaker as shown in Figure 25, CB_1.

The worst case occurs in a station where the bus section tie circuit breaker is last to clear the bus for a fault that leaves one or more phases of the capacitor banks fully energized. In this situation, the bus tie circuit breaker must be properly equipped and rated for the parallel switching of the capacitor banks remaining on the bus section to be de-energized. In other words, in the example of Figure 25, the tie circuit breaker must be capable of switching two banks of capacitors in parallel with two banks of capacitors on the source side. Another solution is to coordinate if possible the clearing times so that the tie circuit breaker is always first to clear to avoid the capacitor switching duty.

6.14 Effect of load

The situation can occur where a circuit breaker is called upon to switch a combination of a capacitive current and a load current. The circuit breaker will have the required switching capability if the total current does not exceed the rated continuous current of the circuit breaker and either

— The power factor is at least 0.8 leading, or

— The capacitive current does not exceed the rated capacitive switching current of the circuit breaker.

Where the above conditions are exceeded, the capability and performance of the circuit breaker is not defined by the standards, and the manufacturer should be consulted. When the power factor is below 0.8 leading, the voltage may be sufficiently out of phase with the current to cause unacceptable restriking. The situation will be more severe if there is also a bank of capacitors located on the source side of the circuit breaker.

6.15 Effect of reclosing

Up to twice the normal inrush currents are possible when reclosing is applied to a circuit breaker that is switching capacitive loads. When capacitor bank current is interrupted at or near a normal current zero, the voltage remaining on the bank may be near peak value. Reclosing a circuit breaker against such a charged capacitor bank may produce high inrush current.

When a capacitor bank is connected to the load side of a feeder circuit breaker equipped with automatic reclosing, high inrush currents can be avoided by isolating the capacitor bank from other loads after the circuit breaker is tripped and before reclosing. The switching device used for regular capacitor bank switching can be employed for isolation. This technique is particularly recommended where other capacitor banks are connected to the same station bus.

A second technique to avoid high inrush currents during reclosing is to increase reclosing time delay. Normally, the discharge resistors inside each capacitor unit will reduce residual voltage or other deliberately introduced discharging devices (e.g., magnetic voltage transformers).

Discharge curves are available from the capacitor supplier and should be consulted where reclosing time is delayed.

Copyright © 2005 IEEE. All rights reserved.

Copyright The Institute of Electrical and Electronics Engineers, Inc.
Provided by IHS under license with IEEE
No reproduction or networking permitted without license from IHS Not for Resale

6.16 Resistor thermal limitations

For capacitor bank circuit breakers equipped with preinsertion resistors, the thermal capability of the resistors must be considered in determining the time interval between capacitive current switching operations. The resistance value is related to the size of the capacitor bank, and the preinsertion resistors should normally have a thermal capability as defined by the rated duty cycle.

If capacitive current switching field tests are planned that exceed the number of operations as defined by the thermal capacity of the preinsertion resistors or that utilize a specially designed circuit breaker, the manufacturer should be consulted regarding the frequency of operations.

6.17 Application considerations for different circuit breaker types

The switching of capacitive current poses different stresses on the different types of circuit breakers. Restrikes on opening and prestrikes on closing may or may not be a problem. The considerations given in 6.17.1 through 6.17.4 are general and are based on experiences gained by laboratory tests, field tests, and field experience.

6.17.1 Oil circuit breakers

6.17.1.1 Restrikes

Depending on the design (e.g., contact speed, electrode shape), an oil circuit breaker generally has long arcing times when interrupting. The restrike probability increases with increased current because gas bubbles reduce the effective amount of oil between the contacts, which, in turn, reduces the dielectric strength of the contact gap. These circuit breakers deserve special consideration when used on or relocated to a system where the line charging current exceeds the rating.

Some oil circuit breakers are pressurized to reduce the size of the bubbles and, as a result, increase the dielectric strength of the contact gap. Some oil circuit breakers may be fitted with breaking resistors to reduce the effects of a restrike.

An oil circuit breaker will normally not interrupt the high-frequency current associated with the restrike, and the high arc impedance introduces an additional damping of the restrike current. The combination of these two factors will reduce the risk for multiple restrikes.

Older contraction oil circuit breakers are known to produce multiple restrikes with voltage escalation and evolving fault as a result.

6.17.1.2 Prestrikes (inrush currents)

Oil circuit breakers are especially sensitive to high-frequency prestrikes when energizing capacitor banks. The prestrikes cause a shock wave in the oil. As oil is not compressible, the shock wave causes mechanical stresses on the internal components of the breaking chamber. As a result of the exposure to these high mechanical stresses, the breaking chamber insulator may shatter, and even stationary contacts may crack. Application of an oil circuit breaker for capacitor bank switching requires a severe reduction of the inrush current frequency or special design of the oil circuit breaker (e.g., using preinsertion resistors).

Bulk oil circuit breakers have been applied using a limitation of 20 kAkHz for over 30 years with no documented problems.

For minimum oil circuit breakers, a value of 1 kAkHz is suggested.

Copyright © 2005 IEEE. All rights reserved.
Copyright The Institute of Electrical and Electronics Engineers, Inc.
Provided by IHS under license with IEEE
No reproduction or networking permitted without license from IHS
Not for Resale

6.17.2 Vacuum circuit breakers

6.17.2.1 Restrikes

The voltage withstand of the contact gap of a vacuum circuit breaker rises very fast, and the restrike probability is low. When a restrike occurs, the contact gap is small, and the vacuum circuit breaker is usually capable of interrupting the high-frequency restrike current. As a result, voltage escalation is negligible.

6.17.2.2 NSDDs

NSDDs (see 4.1.1.2) are associated with vacuum circuit breakers and are generally not a concern.

6.17.2.3 Prestrikes (inrush currents)

The duration of the prestrike in a vacuum circuit breaker is short. Shock waves are not a problem for this type of circuit breaker.

The high-frequency discharge together with contact bouncing may lead to micro-contact melting, especially when the arc is burning in the anode-spot mode (which occurs with currents higher than 10 kA). The breaking of welded points during a subsequent breaking operation with a very low current can damage the contact surface, and this damage may reduce the dielectric withstand of the contact gap. However, a subsequent breaking operation with higher current may restore the dielectric withstand to its original condition. A subsequent no-load test may flatten the micro-spot and result in an increased dielectric strength.

6.17.3 Sulfur hexafluoride (SF_6) circuit breakers

6.17.3.1 Restrikes

The interrupting capacity of SF_6 circuit breakers is limited by the recovery voltage. In other words, the frequency and grounding conditions (i.e., whether the circuit is effectively grounded or ungrounded) are important factors in the determination of the capability of the circuit breaker.

Interruption of capacitive current is an easy switching case for a modern SF_6 circuit breaker, and currents higher than required in ANSI Std C37.06 do not pose a problem.

The capacity of clearing the high-frequency restrike current is low for puffer circuit breakers and even lower for self-blast (or arc-assisted) circuit breakers. Also, the risk for voltage escalation is low. However, a restrike may cause tracking and/or puncture of the insulating material between the contacts (e.g., nozzle, sleeve).

6.17.3.2 Prestrikes (inrush currents)

The duration of the prestrike is dependent on the voltage per breaking unit and the closing speed. In general, this duration is short. SF_6 gas is a compressible medium, and the shock wave does not cause any damage to the contacts and insulating material.

For a particular SF_6 circuit breaker, an inrush current switching test with 100 kA_{peak} at 1 kHz was successfully passed.

Copyright © 2005 IEEE. All rights reserved.

Copyright The Institute of Electrical and Electronics Engineers, Inc.
Provided by IHS under license with IEEE
No reproduction or networking permitted without license from IHS Not for Resale

6.17.4 Air-blast circuit breakers

6.17.4.1 Restrikes

In general, the restrike probability of an air-blast circuit breaker is higher than that of an SF_6 circuit breaker. Air-blast circuit breakers can interrupt the high-frequency discharge current. In other words, they have a higher probability of multiple restrikes, which may lead to voltage escalation. Restrikes may affect the air-blast circuit breaker in the same way as they may affect the SF_6 circuit breaker.

6.17.4.2 Prestrikes (inrush currents)

The considerations given in 6.17.3.2 also apply to air-blast circuit breakers.

7. Considerations of capacitive currents and recovery voltages under fault conditions

7.1 Voltage and current factors

Some requirements, general ratings, and tests for capacitive current switching are based on switching operations in the absence of faults. The presence of a fault can increase the value of both the capacitive switching current and recovery voltage. This possibility is recognized by 4.10.7 of IEEE Std C37.09, by the specification of two voltage factors when breaking in the presence of faults. These voltage factors are applied to single-phase tests as a substitute of three-phase tests and are given in 4.1.4. They are 1.4 for effectively grounded systems and 1.7 for ungrounded systems. Tests for these conditions are not mandatory. An example of such a fault is when a circuit breaker switches an overhead line that interrupts fault current in one phase and capacitive current in the other two phases.

The fact that the capacitive switching current increases in the presence of ground faults is recognized in 4.10.9.3 of IEEE Std C37.09, where the line and cable charging currents are multiplied by 1.25 for effectively grounded neutral systems and 1.7 for ungrounded systems. The number of tests is reduced to reflect the fact that such operations do not occur frequently.

For capacitor banks, the situation is different. No tests are required for switching isolated capacitor banks with effectively grounded neutral under fault conditions in effectively grounded neutral systems. Switching of ungrounded neutral capacitor banks under fault conditions in effectively grounded neutral systems is not considered a normal system condition, and no requirements or tests have been specified. Switching back-to-back under fault conditions is not considered a normal system condition, and no requirements and tests have been specified.

7.2 Reasons for these specific tests being non-mandatory in the standard

In service, circuit breakers have been successful in interrupting capacitive circuits under faulted conditions for a number of reasons. Principal reasons for successful operation include the following:

— The probability of a fault occurring at minimum operating conditions of the circuit breaker and its operating mechanism is extremely small.

— The capacitance of the faulty phase is likely to be discharged before contact separation takes place.

— The voltage factor used for single-phase tests is in excess of the service condition and gives the tested circuit breaker added margin.

— Laboratory tests are performed using a minimal voltage jump, which results in short arcing times. This condition is more severe than the actual network condition.

Copyright © 2005 IEEE. All rights reserved.
Copyright The Institute of Electrical and Electronics Engineers, Inc.
Provided by IHS under license with IEEE
No reproduction or networking permitted without license from IHS
Not for Resale

— When switching a capacitor bank, with its neutral, the system neutral, or both ungrounded, interruption of the first phase results in a single-phase circuit in the uninterrupted phases. Thus, because the two poles of the circuit breaker are in series at final interruption, the voltage across each pole is less than rated.

7.3 Contribution of a capacitor bank to a fault

Consider the network situation given in Figure 25. A single-line simplification is given in Figure 26. A fault has occurred on the line that is interrupted by circuit breaker CB. The capacitance of the capacitor bank will modify the TRV across the circuit breaker to a 1-cosine waveshape having a moderate rate-of-rise with an enlarged amplitude factor compared to the case without the presence of the capacitor bank.

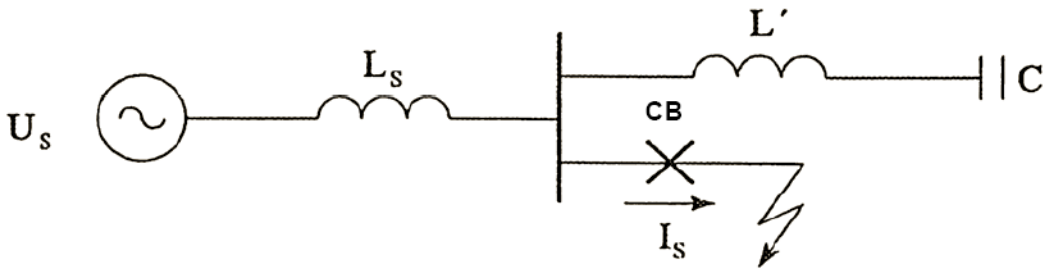

Figure 26—Fault in the vicinity of a capacitor bank

When the initial transient recovery voltage (ITRV) is negligible, circuit breaker CB will attempt to interrupt at the first available current zero following contact separation, and a relatively small contact gap results. As the recovery voltage increases across the gap, a reignition might occur, and the capacitor bank will discharge into the fault through the circuit breaker. The amplitude of the discharge current depends on the voltage across the circuit breaker contacts at the time of reignition, and the frequency of the discharge current is determined by the inductance between the capacitor bank and the fault location.

If the ITRV is not negligible, as is usually the case, the circuit breaker will interrupt with a longer arcing time (i.e., larger contact gap), and the case described above in this subclause will not occur.

The high-frequency discharge current is superimposed on the fault current, and such superimposition creates additional current zeros. Depending on the type of circuit breaker (i.e., oil, air-blast, vacuum, or SF_6), the high-frequency current may be interrupted, and the interruption causes high overvoltages. For further information, refer to van der Sluis and Janssen [B16] and CIGRE Technical Brochure 134 [B2].

A similar situation may occur when circuit breaker CB closes into a fault. The capacitor bank discharges into the fault; and depending on the magnitude of the inductance between the capacitor bank and the fault location, the discharge current can reach peak values and frequencies that exceed those given in IEEE Std C37.06 (see also 6.13.2).

For these specific outrush cases, the manufacturer should be consulted. For further treatment of this subject, see IEEE Std 1036™-1992 [B10].

7.4 Switching overhead lines under faulted conditions

The voltages and currents that occur when switching a faulted transmission line are affected by the circuit parameters and the sequence in which the three phases interrupt. IEEE Std C37.09 lists the maximum value of recovery voltage for switching an unfaulted transmission line as

Copyright © 2005 IEEE. All rights reserved.

Copyright The Institute of Electrical and Electronics Engineers, Inc.
Provided by IHS under license with IEEE
No reproduction or networking permitted without license from IHS Not for Resale

$$2 \times 1.2 \frac{U_r \sqrt{2}}{\sqrt{3}} = 2.4 \text{ p.u.}$$

When switching a faulted line, this value may be exceeded, as may be the rated capacitive switching current value as listed in ANSI Std C37.06 (see also Eriksson and Rashkes [B5]).

When switching a no-load overhead line with a phase-to-ground fault, the highest voltage occurs on the unfaulted phase that interrupts prior to the faulted phase. This is normally the case. The recovery voltage and current for this case are given in Figure 27. Under these conditions, the voltages and currents may exceed those on which the design tests are based.

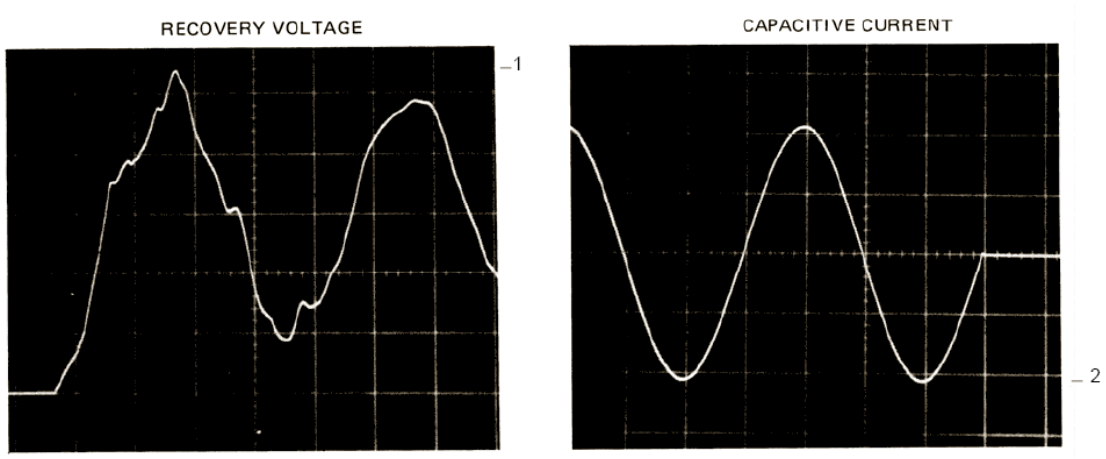

1: $2.74 \times E_{max}$ (phase-to-ground)
2: $1.09 \times$ Rated current

Figure 27—Recovery voltage and current for first pole-to-clear when faulted phase is the second pole-to-clear

For the phase-to-phase fault condition, the recovery voltage and capacitive current are less severe than for the two-phase-to-ground-fault condition. See also IEEE Std 1036-1992 [B10].

7.5 Switching capacitor banks under faulted conditions

The voltages and currents that can occur when switching a faulted capacitor bank depend on the grounding conditions, on whether the fault is to the bank neutral or to ground, and on the sequence in which the three phases interrupt. IEEE Std C37.09 lists the maximum value of recovery voltage in switching an unfaulted shunt capacitor bank as 2.8 p.u. When switching a faulted bank, this value may be exceeded, as may the rated capacitive switching current value. In 7.5.1 through 7.5.4, a comparison is given between the recovery voltages and currents of a reference condition and two faulted conditions: a fault to neutral in the capacitor bank and a fault to ground in one phase.

NOTE—The factor 2.8 for the maximum recovery voltage specified in IEEE Std C37.09 is valid when switching an ungrounded capacitor bank where the second and third phases clear 90° after the first. This statement is true for modern circuit breakers. For older circuit breakers, where the second and third phases do not clear 90° after the first, this factor is 3.0.

Copyright © 2005 IEEE. All rights reserved.
Copyright The Institute of Electrical and Electronics Engineers, Inc.
Provided by IHS under license with IEEE
No reproduction or networking permitted without license from IHS
Not for Resale

7.5.1 Reference condition

The reference condition is illustrated in Figure 28. The neutral of the source and the capacitor bank may be effectively grounded and/or ungrounded, with at least one neutral ungrounded. The size of the capacitor bank is such that the current is equal to the rated isolated capacitor bank current.

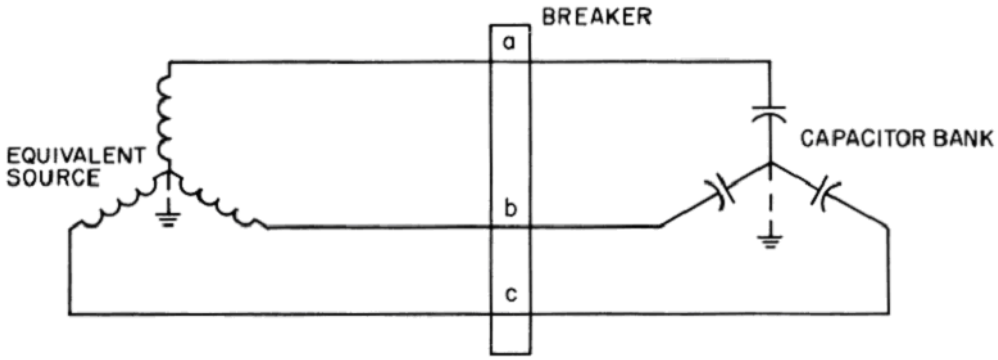

Figure 28—Reference condition

7.5.1.1 Recovery voltage

The highest recovery voltage (i.e., 2.8 p.u.) is obtained in the first pole-to-clear when the neutral of the capacitor bank, the neutral of the source, or both are ungrounded and when poles 2 and 3 clear 90° after the first.

The voltages and currents obtained with this reference condition (i.e., unfaulted balanced system) agree with the 2.8 p.u. voltage listed in IEEE Std C37.09. Although the voltage across the last poles to interrupt when at least one of the neutrals (source or bank) is ungrounded can reach $2\times U_r\sqrt{2} = 2.828\times U_r = 3.46\,\text{p.u.}$, the two phases are in series so that neither is stressed to more than 1.73 p.u.

7.5.1.2 Capacitor bank current

In all cases, the capacitor bank current does not exceed the rated isolated capacitor bank current.

7.5.2 Fault to neutral in one phase (one capacitor bank phase short-circuited)

7.5.2.1 Recovery voltage

The highest recovery voltage (i.e., $2\times U_r\sqrt{2} = 3.46\,\text{p.u.}$) is obtained when at least one neutral is ungrounded and the first pole-to-clear clears a healthy phase. The 3.46 p.u. voltage is in agreement with the voltage factor of 1.7 specified in 4.10.7 of IEEE Std C37.09. If the first pole-to-clear interrupts an unfaulted phase, it is subjected to a recovery voltage of 3.46 p.u. until the second and third phases interrupt.

The highest recovery voltage in the remaining phases is 3.46 p.u., but it is shared by two interrupters in series.

7.5.2.2 Current

The highest capacitive current is obtained in the cases described under 7.5.2.1 when the faulted phase is the first pole-to-clear and is equal to three times that of the reference case.

Copyright © 2005 IEEE. All rights reserved.

Copyright The Institute of Electrical and Electronics Engineers, Inc.
Provided by IHS under license with IEEE
No reproduction or networking permitted without license from IHS
Not for Resale

7.5.3 Fault to ground in one phase

Most systems are effectively grounded, and the highest recovery voltage is obtained when the first pole-to-clear interrupts an unfaulted phase. In this case, the maximum recovery voltage peak will be 2.8 p.u.

The most severe case is when the source is ungrounded and the bank neutral is effectively grounded. If an unfaulted pole is the first to interrupt, the current may reach √3 times that of the reference condition and the recovery voltage 3.46 p.u. The remaining poles are subjected to the same current, but upon interrupting, share the 3.46 p.u. recovery voltage. When the faulted pole is the first pole-to-clear, the current may be three times the rated current value and the recovery voltage

$$2 \times 1.25 \times \frac{U_r \sqrt{2}}{\sqrt{3}}$$

The second pole to interrupt will have a lower current, but a higher recovery voltage of $2 \times U_r \sqrt{2} = 3.46\ \text{p.u.}$, which will be shared with the third pole. If the faulted pole reignites, one of the unfaulted poles will then interrupt, and the conditions will be as previously described when an unfaulted pole was the first to interrupt.

7.5.4 Other fault cases

For phase-to-phase ground faults or phase-to-phase ungrounded faults, with the source effectively grounded and the bank neutral ungrounded, recovery voltages and currents are no more severe than for the standard no-fault condition.

7.6 Switching cables under faulted conditions

The normal frequency capacitive currents and recovery voltages on a faulted cable circuit will be the same as for an effectively grounded capacitor bank under faulted conditions.

7.7 Examples of application alternatives

Other application options available are as follows:

- Use a circuit breaker of a higher rating in the cases of ground faults on ungrounded systems where the recovery voltage, current, or both exceed the requirements of IEEE Std C37.09.
- Reduce the capacitance of the existing capacitor bank size so that the current under faulted conditions does not exceed the rated capacitive switching current of the circuit breaker.
- Use a high-speed switch to ground the source or capacitor bank neutral before switching the capacitor bank under faulted conditions.
- Use a Δ configuration for the capacitor bank instead of an ungrounded Y.

Copyright © 2005 IEEE. All rights reserved.
Copyright The Institute of Electrical and Electronics Engineers, Inc.
Provided by IHS under license with IEEE
No reproduction or networking permitted without license from IHS
Not for Resale

Annex A

(informative)

Bibliography

[B1] CIGRE Technical Brochure 47, Line-Charging Current Switching of HV Lines – Stresses and Testing Part 1 and 2, Oct. 1996.

[B2] CIGRE Technical Brochure 134, Transient Recovery Voltages in Medium Voltage Networks.

[B3] CIGRE WG 13-02, "Switching overvoltages in EHV and UHV systems with special reference to closing and reclosing transmission lines," *Electra*, no. 30, Oct. 1973.

[B4] *Electrical Transmission and Distribution Book.* East Pittsburgh, Pa.: Westinghouse Electric Corporation, 1950.

[B5] Eriksson, R., and Rashkes, V. S., "Three-phase interruption of single and two-phase faults: Breaking stresses in the healthy phase," *Electra*, no. 67, pp. 77–92, 1980.

[B6] Gabrielle, A. F., Marchenko, P. P., and Vassell, "G. S., Electrical Constants and Relative Capabilities of Bundled Conductor Transmission Lines," *IEEE Transactions on Power Apparatus and Systems,* vol. 83, pp. 78–92, Jan. 1964.

[B7] Heldman, D. E., Johnson, I. B., Titus, C. H., and Wilson, D. D., "Switching of Extra-High-Voltage Circuits, Surge Reduction with Circuit Breaker Resistors," *IEEE Transactions on Power Apparatus and Systems*, vol. 83, Dec. 1964.

[B8] "IEEE Committee Report Bibliography on Switching of Capacitive Circuits Exclusive of Series Capacitors," *IEEE Transactions on Power Apparatus and Systems,* vol. PAS 89, pp. 1203–1207, June/July 1970.[10]

[B9] IEEE Std C62.22-1997, IEEE Guide for Application of Metal-Oxide Surge Arresters for Alternating-Current Systems.

[B10] IEEE Std 1036-1992, IEEE Guide for Application of Shunt Power Capacitors.

[B11] Johnson, I. B., Schultz, A. J., Schultz, N. R., and Shores, R. B., *AIEE Transaction*, pt Ill, pp. 727–736, 1955.

[B12] Konkel, H. E., Legate, A. C., and Ramberg, H. C., "Limiting Switching Surge Overvoltages with Conventional Power Circuit Breakers," *IEEE Transactions on Power Apparatus and Systems*, vol. 96, Mar. 1977.

[B13] McCauley, T. M., Pelfrey, D. L., Roettger, W. C., and Wood, C. E., "The Impact of Shunt Capacitor Installations on Power Circuit Breaker Applications," *IEEE Transactions on Power Apparatus and Systems*, vol. PAS-99, no. 6, Nov. 1980.

[B14] O'Leary, R. P., and Harner, R. H., "Evaluation of Methods for Controlling the Overvoltages Produced by Energization of a Shunt Capacitor Bank," *CIGRE Session 1988*, Report 13-05.

[10]IEEE publications are available from the Institute of Electrical and Electronics Engineers, 445 Hoes Lane, Piscataway, NJ 08854, USA (http://standards.ieee.org/).

Copyright © 2005 IEEE. All rights reserved.

Copyright The Institute of Electrical and Electronics Engineers, Inc.
Provided by IHS under license with IEEE
No reproduction or networking permitted without license from IHS
Not for Resale

[B15] Pflanz, H. M., and Lester, G. N., "Control of Overvoltages on Energizing Capacitor Banks," *IEEE Transactions on Power Apparatus and Systems*, vol. PAS-92, pp. 907–915, no. 3, May/June 1973.

[B16] van der Sluis, L., and Janssen, A.L.J., "Clearing faults near shunt capacitor banks," *IEEE Transactions on Power Delivery*, vol. 5, no. 3, pp. 1346–1354, July 1990.

--`,,```,,,,````-`-`,,`,,`,`,,`---
Copyright © 2005 IEEE. All rights reserved.
Copyright The Institute of Electrical and Electronics Engineers, Inc.
Provided by IHS under license with IEEE
No reproduction or networking permitted without license from IHS
Not for Resale