IEEE Std 946™-2004
(Revision of
IEEE Std 946-1992)

IEEE Standards

946™

IEEE Recommended Practice for the Design of DC Auxiliary Power Systems for Generating Stations

IEEE Power Engineering Society

Sponsored by the
Energy Development and Power Generation Committee

IEEE

3 Park Avenue, New York, NY 10016-5997, USA

8 June 2005

Print: SH95307
PDF: SS95307

--`,,`,,`-`-`,,`,,`,`,,`---
Copyright The Institute of Electrical and Electronics Engineers, Inc.
Provided by IHS under license with IEEE
No reproduction or networking permitted without license from IHS

Not for Resale

and Electronics Engineers, Inc.
IEEE
nitted without license from IHS
Not for Resale

IEEE Std 946™-2004
(Revision of
IEEE Std 946-1992)

IEEE Recommended Practice for the Design of DC Auxiliary Power Systems for Generating Stations

Sponsor

Energy Development and Power Generation Committee
of the
IEEE Power Engineering Society

Approved 8 December 2004

IEEE-SA Standards Board

Abstract: Guidance for the design of the dc auxiliary power systems for nuclear and non-nuclear power generating stations is provided by this recommended practice. The components of the dc auxiliary power system addressed by this recommended practice include lead-acid storage batteries, static battery chargers, and distribution equipment. Guidance for selecting the quantity and types of equipment, the equipment ratings, interconnections, instrumentation, control and protection is also provided.
Keywords: battery, battery charger, cross-tie, dc, duty cycle, generating station, ground detection, instrumentation, nuclear, short circuit

The Institute of Electrical and Electronics Engineers, Inc.
3 Park Avenue, New York, NY 10016-5997, USA

Copyright © 2005 by the Institute of Electrical and Electronics Engineers, Inc.
All rights reserved. Published 8 June 2005. Printed in the United States of America.

IEEE is a registered trademark in the U.S. Patent & Trademark Office, owned by the Institute of Electrical and Electronics Engineers, Incorporated.

Print: ISBN 0-7381-4639-0 SH95307
PDF: ISBN 0-7381-4640-4 SS95307

No part of this publication may be reproduced in any form, in an electronic retrieval system or otherwise, without the prior written permission of the publisher.

Copyright The Institute of Electrical and Electronics Engineers, Inc.
Provided by IHS under license with IEEE
No reproduction or networking permitted without license from IHS
Not for Resale

IEEE Standards documents are developed within the IEEE Societies and the Standards Coordinating Committees of the IEEE Standards Association (IEEE-SA) Standards Board. The IEEE develops its standards through a consensus development process, approved by the American National Standards Institute, which brings together volunteers representing varied viewpoints and interests to achieve the final product. Volunteers are not necessarily members of the Institute and serve without compensation. While the IEEE administers the process and establishes rules to promote fairness in the consensus development process, the IEEE does not independently evaluate, test, or verify the accuracy of any of the information contained in its standards.

Use of an IEEE Standard is wholly voluntary. The IEEE disclaims liability for any personal injury, property or other damage, of any nature whatsoever, whether special, indirect, consequential, or compensatory, directly or indirectly resulting from the publication, use of, or reliance upon this, or any other IEEE Standard document.

The IEEE does not warrant or represent the accuracy or content of the material contained herein, and expressly disclaims any express or implied warranty, including any implied warranty of merchantability or fitness for a specific purpose, or that the use of the material contained herein is free from patent infringement. IEEE Standards documents are supplied "**AS IS**."

The existence of an IEEE Standard does not imply that there are no other ways to produce, test, measure, purchase, market, or provide other goods and services related to the scope of the IEEE Standard. Furthermore, the viewpoint expressed at the time a standard is approved and issued is subject to change brought about through developments in the state of the art and comments received from users of the standard. Every IEEE Standard is subjected to review at least every five years for revision or reaffirmation. When a document is more than five years old and has not been reaffirmed, it is reasonable to conclude that its contents, although still of some value, do not wholly reflect the present state of the art. Users are cautioned to check to determine that they have the latest edition of any IEEE Standard.

In publishing and making this document available, the IEEE is not suggesting or rendering professional or other services for, or on behalf of, any person or entity. Nor is the IEEE undertaking to perform any duty owed by any other person or entity to another. Any person utilizing this, and any other IEEE Standards document, should rely upon the advice of a competent professional in determining the exercise of reasonable care in any given circumstances.

Interpretations: Occasionally questions may arise regarding the meaning of portions of standards as they relate to specific applications. When the need for interpretations is brought to the attention of IEEE, the Institute will initiate action to prepare appropriate responses. Since IEEE Standards represent a consensus of concerned interests, it is important to ensure that any interpretation has also received the concurrence of a balance of interests. For this reason, IEEE and the members of its societies and Standards Coordinating Committees are not able to provide an instant response to interpretation requests except in those cases where the matter has previously received formal consideration. At lectures, symposia, seminars, or educational courses, an individual presenting information on IEEE standards shall make it clear that his or her views should be considered the personal views of that individual rather than the formal position, explanation, or interpretation of the IEEE.

Comments for revision of IEEE Standards are welcome from any interested party, regardless of membership affiliation with IEEE. Suggestions for changes in documents should be in the form of a proposed change of text, together with appropriate supporting comments. Comments on standards and requests for interpretations should be addressed to:

Secretary, IEEE-SA Standards Board

445 Hoes Lane

Piscataway, NJ 08854

USA

NOTE—Attention is called to the possibility that implementation of this standard may require use of subject matter covered by patent rights. By publication of this standard, no position is taken with respect to the existence or validity of any patent rights in connection therewith. The IEEE shall not be responsible for identifying patents for which a license may be required by an IEEE standard or for conducting inquiries into the legal validity or scope of those patents that are brought to its attention.

Authorization to photocopy portions of any individual standard for internal or personal use is granted by the Institute of Electrical and Electronics Engineers, Inc., provided that the appropriate fee is paid to Copyright Clearance Center. To arrange for payment of licensing fee, please contact Copyright Clearance Center, Customer Service, 222 Rosewood Drive, Danvers, MA 01923 USA; +1 978 750 8400. Permission to photocopy portions of any individual standard for educational classroom use can also be obtained through the Copyright Clearance Center.

Copyright The Institute of Electrical and Electronics Engineers, Inc.
Provided by IHS under license with IEEE
No reproduction or networking permitted without license from IHS
Not for Resale

Introduction

This introduction in not part of IEEE Std 946-2004, IEEE Recommended Practice for the Design of DC Auxiliary Power Systems for Generating Stations.

DC auxiliary power systems continue to play a vital role in generating station control and in providing backup for emergencies. This recommended practice fulfils a need within the industry to provide common or standard practices for the design of dc systems. The design features are applicable to all installations and systems capacities.

The original issue of IEEE Std 946 was published in 1985 with the title IEEE Recommended Practice for the Design of Safety-Related DC Auxiliary Power Systems for Nuclear Power Generating Stations. The 1992 revision changed the title to apply to all generating stations, while including specific guidance and a detailed bibliography of nuclear design reference standards. This revision makes a general update to reflect the most recent industry practices as well as substantial additions to annexes. In addition, as the design of nuclear plant systems has become well documented by other IEEE standards, the direct emphasis on unique aspects of nuclear plant design has been further diminished, with a full listing of the nuclear design standards included in Annex A. Some nuclear discussion and illustrative figures have been retained as they offer a constructive comparison to non-nuclear designs without having to resort to additional standards.

This recommended practice was prepared by a Working Group that is part of the Station Design, Operation, and Control Subcommittee and was sponsored by the Energy Development and Power Generation Committee of the IEEE Power Engineering Society.

Notice to users

Errata

Errata, if any, for this and all other standards can be accessed at the following URL: http://standards.ieee.org/reading/ieee/updates/errata/index.html. Users are encouraged to check this URL for errata periodically.

Interpretations

Current interpretations can be accessed at the following URL: http://standards.ieee.org/reading/ieee/interp/index.html.

Patents

Attention is called to the possibility that implementation of this standard may require use of subject matter covered by patent rights. By publication of this standard, no position is taken with respect to the existence or validity of any patent rights in connection therewith. The IEEE shall not be responsible for identifying patents or patent applications for which a license may be required to implement an IEEE standard or for conducting inquiries into the legal validity or scope of those patents that are brought to its attention.

Copyright © 2005 IEEE. All rights reserved.

Copyright The Institute of Electrical and Electronics Engineers, Inc.
Provided by IHS under license with IEEE
No reproduction or networking permitted without license from IHS
Not for Resale

Participants

At the time this standard was completed, the Task Force on DC Auxiliary Power Working Group had the following membership.

Joseph Jancauskas, *Chair*

Robert Beavers
John K. Coyle
Paul Hellen
Jim Logothetis
Kurt Ulhir

The following members of the individual balloting committee voted on this standard. Balloters may have voted for approval, disapproval, or abstention.

William Ackerman
Mark Bowman
Steven Brockschink
Tommy Cooper
John K. Coyle
Gary Engmann
Robert Fenton
Patrick Gove
Randall Groves
Edward Horgan, Jr.
Richard Huber
David Jackson
Joseph Jancauskas
Lawrence Long
Gregory Luri
Keith Malmedal
John Merando
Paul Pillitteri
James Ruggieri
Malcolm Thaden
Shanmugan Thamilarasan
Gerald Vaughn
Zhenxue Xu

When the IEEE-SA Standards Board approved this standard on 8 December 2004, it had the following membership:

Don Wright, *Chair*
Steve M. Mills, *Vice Chair*
Judith Gorman, *Secretary*

Chuck Adams
Stephen Berger
Mark D. Bowman
Joseph A. Bruder
Bob Davis
Roberto de Marca Boisson
Julian Forster*
Arnold M. Greenspan
Mark S. Halpin
Raymond Hapeman
Richard J. Holleman
Richard H. Hulett
Lowell G. Johnson
Joseph L. Koepfinger*
Hermann Koch
Thomas J. McGean
Daleep C. Mohla
Paul Nikolich
T. W. Olsen
Ronald C. Petersen
Gary S. Robinson
Frank Stone
Malcolm V. Thaden
Doug Topping
Joe D. Watson

*Member Emeritus

Also included are the following nonvoting IEEE-SA Standards Board liaisons:

Satish K. Aggarwal, *NRC Representative*
Richard DeBlasio, *DOE Representative*
Alan Cookson, *NIST Representative*

Jennie Steinhagen
IEEE Standards Project Editor

Copyright © 2005 IEEE. All rights reserved.

Copyright The Institute of Electrical and Electronics Engineers, Inc.
Provided by IHS under license with IEEE
No reproduction or networking permitted without license from IHS
Not for Resale

Contents

1. Overview 1

1.1 Scope 1

2. Normative references 1

3. Definitions 2

4. General 2

4.1 Description and operation 2
4.2 Number of batteries 3
4.3 Number of chargers and distribution panels 3
4.4 System voltage and battery size considerations 3
4.5 Physical layout 4

5. Batteries 4

5.1 General description 4
5.2 Determination of battery duty cycles and battery size (capacity) 4
5.3 Installation design 5
5.4 Maintenance, testing, and replacement 5
5.5 Qualification 5

6. Battery chargers 5

6.1 General description 5
6.2 Determination of rated output 5
6.3 Sample calculations 6
6.4 Installation Design 6
6.5 Output characteristics 7

7. Distribution system and equipment 7

7.1 Protective device description and rating 7
7.2 Typical diagram 8
7.3 Voltage ratings for dc powered components 8
7.4 Instrumentation, controls, and alarms 12
7.5 Special dc loads 14
7.6 Design features to assist in battery testing 16
7.7 Cross-tie between buses 16
7.8 Qualification 17
7.9 Available short-circuit current 17

8. Spare equipment 18

Copyright © 2005 IEEE. All rights reserved.

--`,,`,`,,`-`-`,,`,,`,`,,`---

Copyright The Institute of Electrical and Electronics Engineers, Inc.
Provided by IHS under license with IEEE
No reproduction or networking permitted without license from IHS

Not for Resale

Annex A (informative) Bibliography 19

Annex B (informative) Battery charger rating—sample calculations 21

B.1 Introduction 21
B.2 Formulas 21
B.3 Sample calculations 22

Annex C (informative) Batteries, available short-circuit current—sample calculations 23

C.1 Introduction 23
C.2 Discussion 23
C.3 Sample calculations 24

Annex D (informative) Effect of grounds on the operation of dc auxiliary power systems 27

D.1 Introduction 27
D.2 Discussion 27
D.3 Sample evaluations 27

Annex E (informative) Battery charger, short-circuit current contribution 30

E.1 Abstract 30
E.2 Discussion 30
E.3 Sample evaluation 31

Copyright © 2005 IEEE. All rights reserved.

Copyright The Institute of Electrical and Electronics Engineers, Inc.
Provided by IHS under license with IEEE
No reproduction or networking permitted without license from IHS
Not for Resale

IEEE Recommended Practice for the Design of DC Auxiliary Power Systems for Generating Stations

1. Overview

1.1 Scope

This recommended practice provides guidance for the design of the dc auxiliary power systems for nuclear and non-nuclear power generating stations. The components of the dc auxiliary power system addressed by this recommended practice include lead-acid storage batteries, static battery chargers, and distribution equipment. Guidance for selecting the quantity and types of equipment, the equipment ratings, interconnections, instrumentation, control, and protection is also provided.

The ac power supply to the battery chargers; the loads served by the dc systems, except as they influence the dc system design; and dedicated engine starting (cranking) battery systems are beyond the scope of this recommended practice.

2. Normative references

The following referenced documents are indispensable for the application of this document. For dated references, only the edition cited applies. For undated references, the latest edition of the referenced document (including any amendments or corrigenda) applies.

IEEE Std 484™, IEEE Recommended Practice for Installation Design and Installation of Vented Lead-Acid Storage Batteries for Stationary Applications.[1,2]

IEEE Std 485™, IEEE Recommended Practice for Sizing Large Lead Storage Batteries for Generating Stations and Substations.

IEEE Std 649™, IEEE Standard for Qualifying Class 1E Motor Control Centers for Nuclear Power Generating Stations.

IEEE Std 666™, IEEE Design Guide for Electric Power Service Systems for Generating Stations.

[1] IEEE publications are available from the Institute of Electrical and Electronics Engineers, Inc., 445 Hoes Lane, Piscataway, NJ 08854, USA (http://standards.ieee.org/).
[2] The IEEE standards or products referred to in this clause are trademarks of the Institute of Electrical and Electronics Engineers, Inc.

Copyright © 2005 IEEE. All rights reserved.

Copyright The Institute of Electrical and Electronics Engineers, Inc.
Provided by IHS under license with IEEE
No reproduction or networking permitted without license from IHS
Not for Resale

IEEE Std 1115™, IEEE Recommended Practice for Sizing Nickel-Cadmium Batteries for Stationary Applications.

IEEE Std 1184™, IEEE Guide for the Selection and Sizing of Batteries for Uninterruptible Power Systems.

IEEE Std 1187™, IEEE Recommended Practice for Installation Design and Installation of Valve-Regulated Lead-Acid Storage Batteries for Stationary Applications.

IEEE Std 1189™ IEEE Guide for Selection of Valve-Regulated Lead-Acid (VRLA) Batteries for Stationary Applications.

IEEE Std 1375™, IEEE Guide for the Protection of Stationary Battery Systems.

3. Definitions

For the purposes of this recommended practice, the following terms and definitions apply. *The Authoritative Dictionary of IEEE Standards* [B2][3], should be referenced for terms not defined in this clause.

3.1 battery capacity: The amp-hours available in an installed battery as measured by test. This is measured, normally after an equalize charge, by a performance or modified performance test. The battery capacity may be larger or smaller than the rated capacity and is expressed as a per cent of rated capacity for a given duration. For lead acid batteries, this is due to degradation of the grid, connections, welds, pellet interface to the grid, crystal surface contact interface of the lead oxides, wet surface interface between the lead oxide and the electrolyte, electrolyte specific gravity, and transport resistance of the hydrogen and oxygen between the positive and negative plates. Since the factors which affect battery performance are varied, the measured battery capacity at a long duration may differ from the measured capacity at a short duration.

3.2 battery rated capacity: The rated amp-hours available in a battery at 100% charge. This is established via "S" or fan curves by a manufacturer's test of a limited sample of cells using the interconnecting hardware supplied with the standard installation. The rated amp-hours may differ as a function of the discharge duration, long duration discharges typically utilizes the available material more effectively.

NOTE—See IEEE Std 485 for an example of the manufacturer's sizing curves.[4]

3.3 battery state of charge: A factor between 0 and 100. It establishes the available amp-hours by multiplying the state of charge times the battery capacity times the battery rated capacity for a specified discharge duration. The battery state of charge reflects the conversion or restoration of lead sulfate to lead oxide after a discharge.

4. General

4.1 Description and operation

All power generating stations require dc auxiliary power systems to operate those dc components that must be available should a loss of ac power occur. Some examples of such components are auxiliary motors, circuit breakers, relays, solenoids, and inverters. The dc source(s) may be one common battery for both power and control or two separate batteries; one for power and another for control and instrumentation. Separate batteries are recommended for special services such as for engine (cranking) starting.

[3] The numbers in brackets correspond to those of the bibliography in Annex A.
[4] Notes in text, tables, and figures are given for information only and do not contain requirements needed to implement this standard.

Copyright © 2005 IEEE. All rights reserved.

Copyright The Institute of Electrical and Electronics Engineers, Inc.
Provided by IHS under license with IEEE
No reproduction or networking permitted without license from IHS
Not for Resale

In normal operation, the battery and charger(s) are both connected to the dc distribution bus and, therefore, operate as parallel sources to supply the connected loads. The charger, in addition to charging the battery, carries the normal continuous load. Chargers are typically provided with a current limiting circuit for overload protection. If overloaded, the charger output voltage will drop, causing all loads in excess of the charger rating to be supplied by the battery. In the event of: a) a failure of the ac power supply to the charger(s) or b) a charger failure (or the removal of the charger from service), the battery must supply all of the power required by the loads for some designed period of time.

Specific design guidance for dc systems for nuclear generating stations are discussed fully in numerous design standards found in Annex A.

4.2 Number of batteries

As a minimum, one battery should be provided for each unit. If the auxiliary loads of one unit are divided into two or more independent systems, then each independent system should be provided with a separate battery. If the maximum dc power requirements exceed the capacity of one battery, then the development of two independent systems should be considered. Cross-ties from other batteries may be provided, where appropriate (see 7.7).

For Class 1E nuclear applications, as a minimum, a separate battery shall be provided for each Engineered Safety Feature (ESF) Division in each unit in order to provide the required independence between redundant Class 1E power systems. For increased operating flexibility in designs where the reactor protection system channels are dependent on dc, the number of safety-related batteries provided on each unit should equal the number of independent and redundant reactor protection system (instrumentation and control) channels. For example, in a unit with four reactor protection channels, four batteries should be provided. The rated capacity of each battery should be determined as described in 5.2 of this guide.

4.3 Number of chargers and distribution panels

As a minimum, one battery charger and main distribution panel should be provided for each battery. Additional (spare or standby) chargers should be considered for increased operating flexibility and plant availability (see Clause 8.)

4.4 System voltage and battery size considerations

The nominal system voltages of 250 V, 125 V, 48 V, and 24 V are generally utilized in station dc auxiliary power systems. The type, rating, cost, availability, and location of the connected equipment should be used to determine which nominal system voltage is appropriate for a specific application. 250 V systems are typically used to power motors for emergency pumps, large valve operators, and large inverters. 125 V systems are typically used for small inverters, dc power supplies, control power for most relay logic circuits and the closing and tripping of switchgear circuit breakers. 48 V or 24 V systems are typically used for specialized instrumentation or communications systems.

For a given dc auxiliary power system, the connected equipment governs the maximum and minimum voltage operating limits. Standards such as IEEE C37.16™-1997 [B17], IEEE Std C37.90™-1989 (R1994) [B18], and NEMA MG 1-1998 [B19] establish voltage limits for various equipment and relays (see 7.3). Operating outside the voltage limits may affect the expected life of the equipment, the speed at which it operates, the available torque, or the device's capability to operate. When the voltage limits for a given system are established, the size of the battery (number of cells and capacity) and the operating procedures should be established as outlined in IEEE Std 485™[5] and IEEE Std 450™-2002 [B7], respectively.

[5] Information on references can be found in Clause 2.

Copyright © 2005 IEEE. All rights reserved.

Copyright The Institute of Electrical and Electronics Engineers, Inc.
Provided by IHS under license with IEEE
No reproduction or networking permitted without license from IHS
Not for Resale

4.5 Physical layout

Consideration should be given to locating the equipment (battery, charger, and main distribution panel) as close together, and as near the center of the electrical load, as practical so as to minimize voltage drop and to accommodate maintenance and testing activities. If the ac auxiliary power system is separated into two or more independent divisions, with a dc auxiliary power system for each ac division, then the equipment and cables for each dc auxiliary power system division should be separated from the equipment and cable of the other division, to the same extent as employed for the ac system.

When dc power is used for control and instrumentation purposes, consideration should be given in routing the entire power system in raceways which do not contain distribution system cables subject to surges. Surges may be present in ac systems, high voltage dc systems and grounding cables as a result of switching, lightning, and faults.

5. Batteries

5.1 General description

The station batteries are used to supply power to dc loads during the loss of all ac power sources.

5.2 Determination of battery duty cycles and battery size (capacity)

The determination of the battery duty cycles is a plant-unique activity because the magnitude (total amperes) and duration of each segment of the duty cycle is the sum of the individual operating loads (amperes) over the time period required for the specific plant equipment under consideration.

In addition, the overall duration (total battery discharge time) of the duty cycle cannot be less than the estimated time interval necessary to restore ac power (either from an on-site engine-generator source or an off-site power source) to the battery chargers and other auxiliaries. This estimated time interval is determined by engineering judgment, which is greatly influenced by operating experience, and by the quantity, reliability, and flexibility of the specific off-site power sources (generation and transmission system network equipment) and on-site power sources (engine-generators and distribution systems).

For example, a minimum scenario may require the batteries to supply power to the system for approximately 1 min (the time between loss of ac power and the loading of the diesel) if, after such time, the charger output and dc loads return to normal. More often, the overall duration of the battery duty cycle is estimated at ½ h, 1 h, 2 h, 4 h, or 8 h. The time/load current profile should consider the requirements in all operating modes. Operating requirements, such as operation while a battery charger is out for repair or while switches are operated to bring a spare charger on line, should also be considered. Battery duty cycles that require manual shedding of battery loads also require that sufficient capacity be provided to allow adequate time for such manual actions. Thus, several battery duty cycles will usually be required to address such postulated events.

After the magnitude and time period of each component load and the overall duration have been determined, each battery duty cycle should be constructed, and the battery sized in accordance with IEEE Std 485. The resulting largest battery size from each of the different duty cycle scenarios considered becomes the worst-case design basis for the battery system.

Consideration may be given to providing additional design margin such that the battery will be able to fulfill the service requirements under the following conditions:

a) If it ever should become necessary to electrically remove one or more cells. This can be accomplished by using the higher end-of-discharge cell voltage (corresponding to the reduced number of cells) in the battery sizing calculation.

Copyright © 2005 IEEE. All rights reserved.

Copyright The Institute of Electrical and Electronics Engineers, Inc.
Provided by IHS under license with IEEE
No reproduction or networking permitted without license from IHS
Not for Resale

b) For quick turnaround of the battery to service after a discharge. Standard float or equalize charging of the battery, following a discharge, results in an exponential return of charge. Full charge may not be completed for days. Depending on the voltage setting, the battery chemistry, and the room temperature, 95% to 98% of the charge may be returned within the time period used for T, the time to recharge the battery, in 6.2. By allowing 2% to 5% margin for less than full charge when computing the battery size, the final charging period is less critical and the battery may be available for 100% return to service earlier. For nuclear applications this additional margin is not required if the postulated design basis scenario does not require multiple losses of offsite power.

5.3 Installation design

The design of each battery installation should be in accordance with IEEE Std 484, and should include provisions for installation, inspection, and testing.

Many battery chemistries such as those of lead-acid batteries are sensitive to temperature variations above and below their manufacturer's rated temperature (e.g., 25 °C for U.S. manufacturers, 20 °C for European manufacturers). Although the performance impacts of these temperature variations can be accounted for in the design of the battery systems by following the recommendations of IEEE Std 485, consideration should be given to a location which is not subject to temperature variations greater than 5 °C.

5.4 Maintenance, testing, and replacement

Batteries should be maintained, tested, and replaced in accordance with IEEE Std 450-2002.

5.5 Qualification

DC system components should be qualified for the environment in which they are installed. This includes seismic requirements. Although "qualification" is generally construed to be a term related to the nuclear industry, the concept of understanding the capabilities and design ratings of the equipment and ensuring that the installed use of the equipment is within the design parameters is overall good engineering practice.

6. Battery chargers

6.1 General description

The station battery chargers are used to convert ac to dc to charge the station batteries and to supply power to dc loads during normal operation.

6.2 Determination of rated output

Constant current chargers deliver the charge at a constant rate, allowing the voltage to increase. Station battery chargers are sized as though the charge were delivered by a constant current charger. Since the final voltage may exceed the maximum voltage of devices attached to the dc system, constant voltage chargers are not used in generating stations. Constant voltage charging is represented by a time period at the charger current limit, until the battery is approximately 60% to 85% charged and a subsequent exponential decay of charging current until the battery is 100% charged. Placing the constant voltage charger in equalize extends the time the charger is in current limit, increases the charging current during the exponential decay and shortens the charge time. The constant current charging formula will approximate the constant voltage charging time to 95% state of charge when a constant voltage charger is set to the equalize mode.

--`,,`,`,-`-`,,`,,`,`,,`---
Copyright © 2005 IEEE. All rights reserved.

Copyright The Institute of Electrical and Electronics Engineers, Inc.
Provided by IHS under license with IEEE
No reproduction or networking permitted without license from IHS
Not for Resale

The station battery chargers should be sized in accordance with Equation (1) and Equation (2):

$$I_1 = I_{LC} + (1.1 \text{ x } Q) / T \quad (1)$$

$$I_2 = I_{LC} + I_{LN} \quad (2)$$

where

I_1 is the minimum required charger rated output (in amperes). Battery manufacturers often recommend that the charging rate be limited; typical values are 10% to 20% of the 8 h capacity. I_1 should be evaluated for the maximum and minimum values of I_{LC}.

I_2 is the minimum charger output (in amperes) that will supply the maximum operational load.

I_3 is the recommended charger rated output (in amperes); i.e., the larger of I_1 or I_2. If it can be demonstrated that the reduction in battery capacity that results during and following the application of L_n does not compromise the ability of the battery to satisfy its intended function, the user may select Equation (1) as the basis of sizing the battery charger(s). Battery manufacturers often recommend that the charging rate be limited; typical values are 10% to 20% of the 8 h capacity. I_3 should be evaluated for the maximum values of I_{LC}.

I_{LC} is the continuous dc load (in amperes), including future load growth.

I_{LN} is the largest combination of non-continuous loads (as defined in 4.2.2 of IEEE Std 485-1997) that would likely be connected to the bus simultaneously during normal plant operation, including periodic testing of dc components such as emergency lighting and emergency oil pumps.

1.1 is the constant that compensates for the battery losses.

Q is the discharge from the battery measured in ampere-hours. After discharge testing as defined in IEEE Std 450-2000 [B7] , it is convenient to assure that the ampere-hours removed by the test can be replaced in 8 h to 24 h. For users meeting the requirements of IEEE Std 308™-2001 [B3], the ampere-hours removed by the duty cycle is appropriate.

T is the time to recharge the battery to approximately 95% of capacity (in hours). To minimize dc system downtime, a reasonable recharge time should be selected; 8 h to 24 h is recommended. It is recommended that the battery manufacturer be consulted for values of T less than 8 h.

The battery charger specification should include (or account for) any abnormal service conditions. For example, ambient temperature, altitude, etc., may affect the charger capacity as noted in NEMA PE 5-1996 [B21].

6.3 Sample calculations

Sample calculations of battery charger rating appear in Annex B.

6.4 Installation design

When designing the environmental controls, attention should be given to the control of room temperatures. Batteries may be sized to perform at high, nominal, or low temperatures. However, standard float charging systems are not temperature compensated. If the temperature is not maintained within a narrow range (nominal temperature of 25°C ± 6°C), standard float charging systems will overcharge at high

Copyright © 2005 IEEE. All rights reserved.

Copyright The Institute of Electrical and Electronics Engineers, Inc.
Provided by IHS under license with IEEE
No reproduction or networking permitted without license from IHS
Not for Resale

temperatures, maintain the correct polarization at the nominal temperature, and undercharge at low temperature. At low temperatures, charge replacement after a discharge may be unanalyzed. At high temperatures, 1) self discharge of the cell results in an increased chemical reaction within the cell, 2) the hydrogen generation increases, and 3) the standard float voltage charges the positive plate excessively, increasing grid corrosion. Suitable operational performance and expected life is achieved when the electrolyte temperature is monitored to maintain a temperature between 19 °C and 31 °C. For Class 1E nuclear applications, safety related heating and safety related cooling may be required to achieve consistent performance.

6.5 Output characteristics

All station battery chargers should meet the requirements of NEMA PE 5-1996 [B21] and the following performance characteristics descriptions.

6.5.1 Output ripple and dc system transients related to the charger filter

A typical charger (without additional filtering) will produce approximately 2% rms (2.6 V on a 130 V basis) ripple when connected to a fully charged battery with an ampere-hour rating (at the 8 h rate) of at least four times the output current rating of the charger. In some cases, dc loads (e.g., solid-state instruments) may require improved filtering. The maximum ripple can usually be limited to 30 mV rms by adding filters to the chargers. The combination of current harmonics from chargers and electronic loads will affect the battery life, if the harmonics result in the battery charging voltage dipping below the minimum battery cell voltages.

While supplying high initial inrush currents, batteries may exhibit a momentary voltage dip phenomena (known as the “coup de foet”, or “crack of the whip”), and dc systems that do not have filtered chargers may exhibit system voltage drops during these high initial inrushes when the battery and charger are operated in parallel. Chargers are designed so that either the filters are charged from the ac system or the dc system. Charging filters from the dc side may result in high loading on the battery and subsequent dc system voltage drops. AC charged filters require a finite time before being placed in service.

6.5.2 Operation without a connected battery

For some designs, it may be appropriate to disconnect the battery from the system for maintenance of the battery. Under this condition, the charger/battery eliminator should be capable of supplying the load without a battery connected and should be so specified for these applications. However, an increase in the voltage regulation and output ripple should be expected when the battery is not connected and providing a filtering effect from the large capacitances of its parallel plates. If the increase in voltage regulation or ripple cannot be tolerated, the maximum allowable values should be specified.

6.5.3 Load sharing between paralleled chargers

When operating considerations dictate that two chargers be connected in parallel to the dc bus, the specification should require that load-sharing circuitry be provided.

7. Distribution system and equipment

7.1 Protective device description and rating

A circuit breaker, fuses, or a manual disconnecting device should be provided between the battery terminals and the main distribution bus. The buses in the main distribution panel should be insulated for personnel protection and to minimize the probability of bus faults. However, these buses must be insulated in designs incorporating a manual disconnecting device. In any arrangement, the positive and negative main lead cables should be run in separate conduits so as to ensure that any fault on these cables will first be polarity-

Copyright © 2005 IEEE. All rights reserved.
--`,,`,,`-`-`,,`,,`,`,,`---
Copyright The Institute of Electrical and Electronics Engineers, Inc.
Provided by IHS under license with IEEE
No reproduction or networking permitted without license from IHS
Not for Resale

to-ground before a polarity-to-polarity fault can develop. The use of nonmagnetic conduit should be considered so as to reduce the inductance of this circuit. A circuit with lower inductance will reduce the magnitude of voltage spikes generated and reflected into the dc system when high-current load circuits (such as motors, inverters, and faults), are interrupted. In addition, a highly inductive circuit may adversely affect the performance of current-limiting fuses, if utilized. A barrier should also be provided between the positive and negative line leads at the main distribution panel. The continuous current rating of the protective/disconnecting device should be selected to accommodate the maximum sustained current in the battery duty cycle. Where provided, the protective device should have a trip rating: a) sufficiently high to prevent damage to the fuse element or opening of the breaker at the 1 min current rating of the battery, and b) sufficiently low to protect the main lead cables.

In cases where a battery has been sized to meet the demand of a fractional minute load, the protective device should have a trip rating sufficiently high to prevent damage to the fuse element or opening of the breaker at the fractional minute current rating of the battery. Consult the battery manufacturer for ratings for discharge duration less than 1 min.

The (minimum) melt current of the fuse element at 1 min should be above the 1 min current rating of the battery if the maximum current is assumed to be the load for the 1 min period.

The main protective device should coordinate with all downstream protective devices. All distribution bus protective devices should have a dc voltage rating consistent with the maximum dc system-operating voltage (see 7.3), and should have an interrupting capacity that exceeds the maximum short-circuit current available at that voltage. The distribution bus and any manual disconnecting device should have a short-circuit current withstand capability that exceeds the maximum short-circuit current available. All time-current coordination curves and ratings should be based on dc (not on ac).

7.2 Typical diagram

The optimum dc supply and distribution system diagram for any given plant will depend on conditions and design criteria established for that plant. Figure 1 is the key diagram for one acceptable 125 V dc system.

For Class IE nuclear applications, Figure 2 is the key diagram for one acceptable 125 V Class IE dc system.

7.3 Voltage ratings for dc powered components

Equipment specifications for components powered by dc systems should require the equipment to operate, as designed and without damage, over the input terminal voltage range corresponding to the variation in system voltage. For designs in which the battery is equalized while connected to the load, this range should cover the variation from equalize to the final end-of-discharge voltage (e.g., from 140 V to 105 V dc for a 60-cell nominal 125 V dc system, or from 280 V to 210 V dc for a 120 cell nominal 250 V dc system).

Voltage drop from the battery terminals to the terminals of the component should be addressed. In addition, large loads, such as motor starting and charging capacitor inrush may result in suppression of system voltage. Because of this variation, the rated (nameplate) maximum and minimum voltage of the components governs the allowable maximum and minimum voltage at the upstream battery terminals, while also including allowance for cable voltage drop. Table 1 provides the recommended voltage range of some (typical) dc powered components for those designs in which the battery is equalized while connected to the load. Note that the dc voltage ratings of components may not have a plus or minus 10% tolerance that is typical of ac rated components.

For ungrounded dc systems, external transients such as lightning and transmission faults affecting the ground grid may result in significant voltage increases, line to chassis. For protected indoor installations components should be able to withstand 2 kV to ground momentarily without damage. This includes surge

Copyright © 2005 IEEE. All rights reserved.

Copyright The Institute of Electrical and Electronics Engineers, Inc.
Provided by IHS under license with IEEE
No reproduction or networking permitted without license from IHS
Not for Resale

suppression devices and filters. For outdoor locations components should be able to withstand 4 kV to ground momentarily without damage.

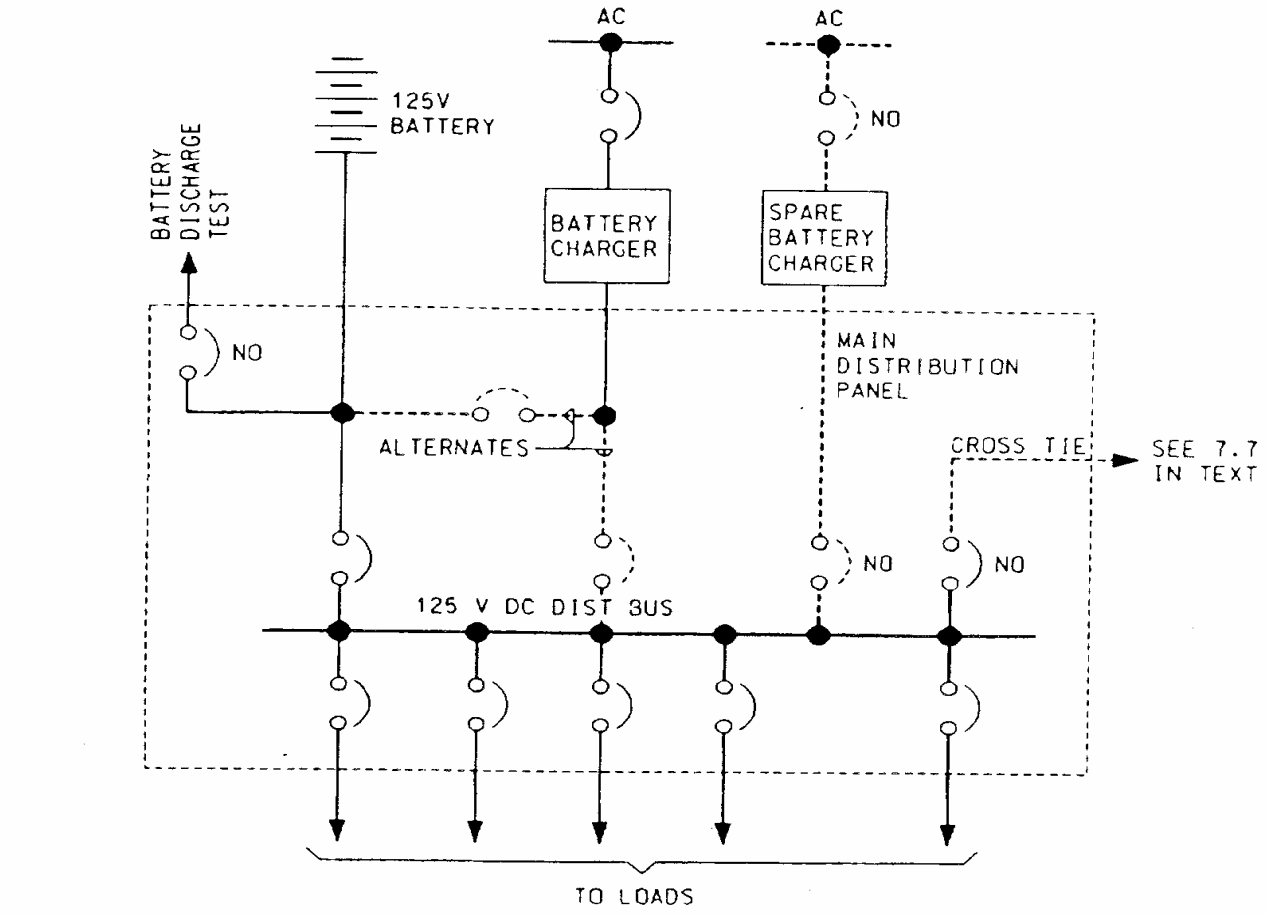

NOTES:

1—All breakers normally closed except those marked "NO."

2— "- - - - - - -" indicates optional or alternate features.

3—Fuses may be substituted for breakers.

Figure 1—125 V dc system key diagram

Copyright © 2005 IEEE. All rights reserved.

Copyright The Institute of Electrical and Electronics Engineers, Inc.
Provided by IHS under license with IEEE
No reproduction or networking permitted without license from IHS
Not for Resale

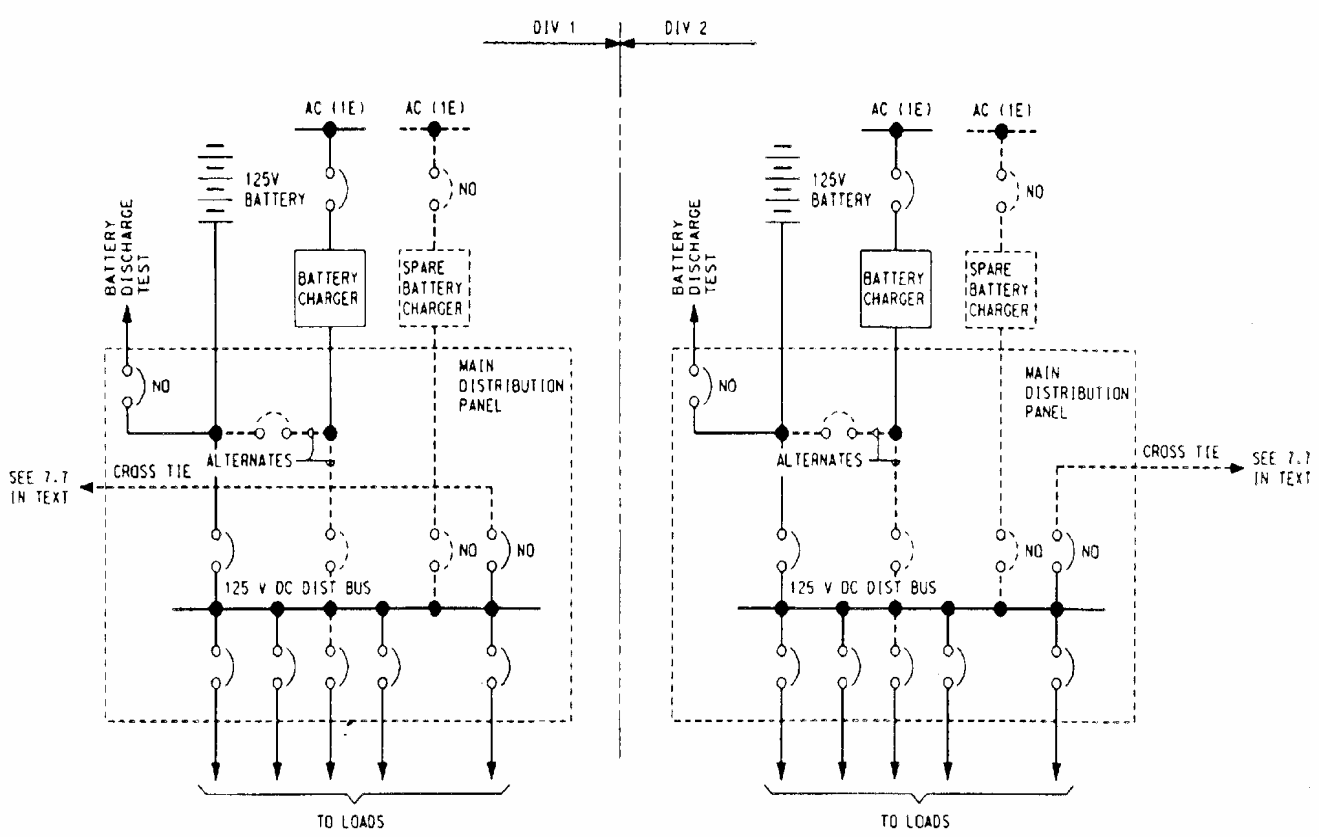

NOTES:

1—All breakers normally closed except those identified "NO."

2— "- - - - - - -" indicates optional or alternate features.

3—Fuses may be substituted for breakers.

Figure 2—125 V Class 1E dc system key diagram

Copyright © 2005 IEEE. All rights reserved.

Copyright The Institute of Electrical and Electronics Engineers, Inc.
Provided by IHS under license with IEEE
No reproduction or networking permitted without license from IHS
Not for Resale

Table 1— Recommended voltage range of 125 V and 250 V dc (nominal rated components for designs in which the battery is equalized while connected to the load)

Component	Voltage range	
	125 V dc (nominal)	250 V dc (nominal)
Circuit-breaker close coil	90–140	180–280
Circuit-breaker trip coil	70–140	140–280
Motor-starter coil	90–140	180–280
Solenoid valve	90–140	180–280
Valve-operator motor	90–140	180–280
Auxiliary motor	100–140	200–280
Electromechanical relay coil	100–140	200–280
Solid-state relay	100–140	200–280
Instrumentation	100–140	200–280
Indication lamp	100–140	200–280
Solid-state power supply (inverter and converter)	100–140	200–280
NOTE—The voltage ranges listed above may not agree with those recommended in other industry standards for the equipment, but are recommended for proper component operation with main distribution-panel bus voltage, which varies from 105 V to 140 V (210 V to 280 V).		

For ungrounded 250 V systems that also supply 125 V dc components in a split battery arrangement, the voltage to ground depends on which bus is grounded. Since any bus could become grounded, the 125 V components, including any surge protection and filters should be capable of withstanding the full system voltage at equalize.

In addition to ampacity considerations, supply cables for dc-powered components should be sized to provide adequate voltage for proper operation during the individual component's worst-case operating condition. The worst-case condition for a constant power load such as an inverter may occur at a reduced battery-terminal voltage in which case there will be an increase in load current. A dc valve-operator motor may have a locked-rotor (starting) current of 400% to 1000% of rated full-load current; therefore, voltage drop during the starting of the valve operator motor is typically the worst-case condition. In addition, the voltage drop in four (rather than two) feeder conductors (from starter to motor) should be included in the total voltage drop, due to the necessity of switching the series field when reversing the valve motor. For small horsepower motors, the voltage drop across the thermal-overload relay element may be significant and should be considered in the cable sizing.

Copyright © 2005 IEEE. All rights reserved.

Copyright The Institute of Electrical and Electronics Engineers, Inc.
Provided by IHS under license with IEEE
No reproduction or networking permitted without license from IHS
Not for Resale

7.4 Instrumentation, controls, and alarms

7.4.1 General

Figure 3 is a one-line diagram showing the recommended instrumentation and alarms for the 125 V dc system shown in Figure 1 and Figure 2.

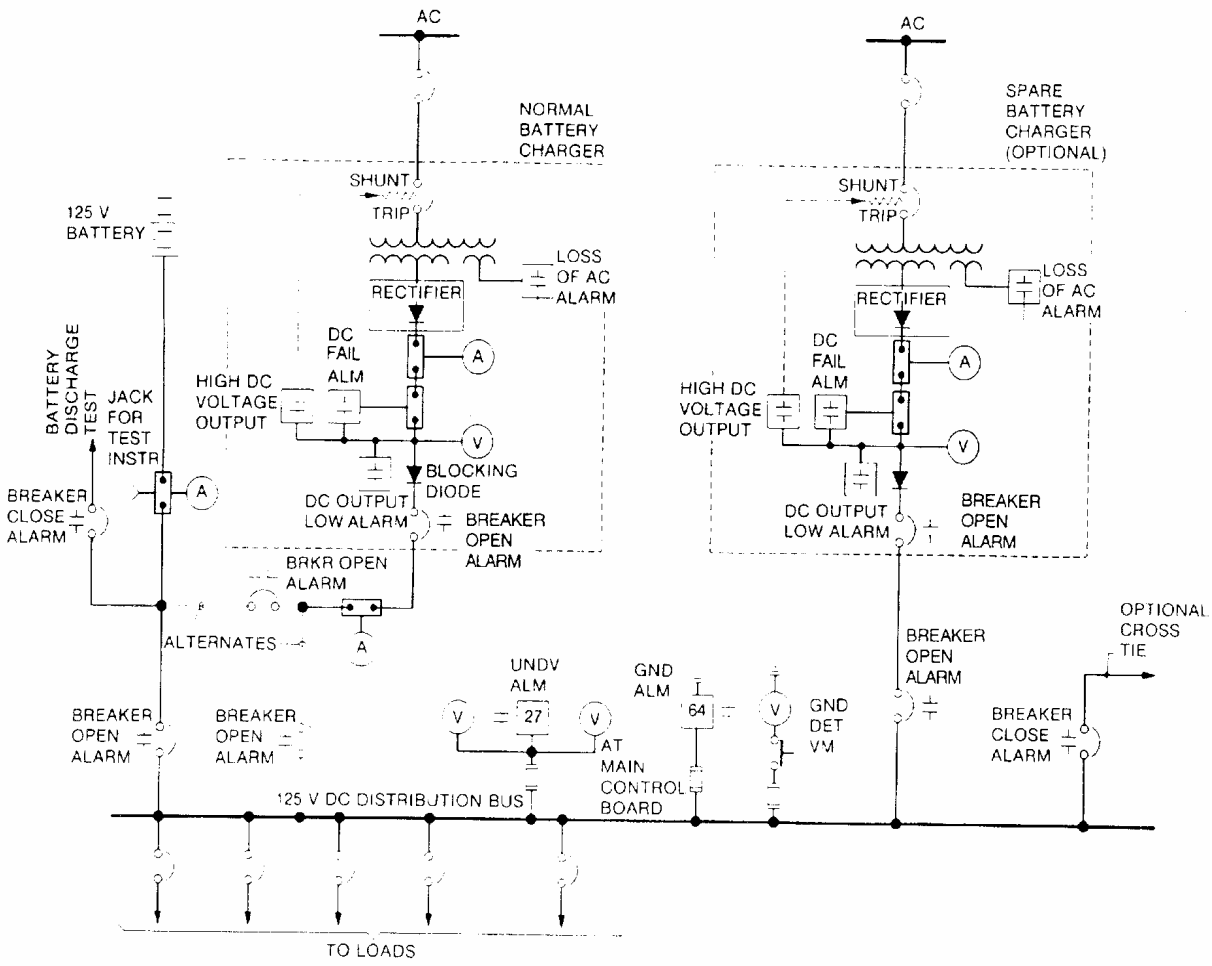

Figure 3—125 V dc system instrumentation and alarms (Nuclear Class 1E and Non-Class 1E)

The recommended instruments, controls, alarms, and their locations are described in Table 2.

The controls for the battery and its related battery charger should be principally located in the battery area. All switching associated with the battery system should be performed at the local equipment. No remote controls should be provided.

Copyright © 2005 IEEE. All rights reserved.

Copyright The Institute of Electrical and Electronics Engineers, Inc.
Provided by IHS under license with IEEE
No reproduction or networking permitted without license from IHS
Not for Resale

Table 2— Instruments, controls, alarms, and their locations

Instrument/alarm/control	Location	
	Main control room (MCR)	Local
Battery current (ammeter, charge/discharge)		X[a]
Battery charger output current (ammeter)		X
DC bus voltage (voltmeter)	X	X
Battery charger output voltage (voltmeter)		X
Ground detector (voltmeter)		X
DC bus undervoltage alarm	X	
DC system ground alarm	X[b]	
Battery breaker/switch open alarm	X	
Battery-charger output-breaker open alarm	X[b]	
Battery-charger dc output failure alarm	X[b]	
Cross-tie breaker closed alarm	X[b]	
Battery-charger ac power failure alarm	X[b]	
Charger low dc voltage alarm	X[b]	
Charger high dc voltage shutdown relay (opens main ac supply breaker to the charger)		X
Battery test breaker closed alarm	X[b]	

[a] A Hall-effect instrument, or a jack (connected to the battery ammeter shunt) for use with a portable test instrument (microvoltmeter) may be provided to read battery charging current, and thus determine the state of charge as described in IEEE Std 450-2002, [B7].

[b] May be grouped with others to form one or more common alarms provided the actuating parameter can be readily identified.

The following battery instrumentation should be considered to determine the battery capability and have provided useful trend information. Float current has been found to be effective in determining the battery state of charge and in valve-regulated lead-acid (VRLA), evaluating battery dryout. Float current is typically in the 100 mA to 300 mA range. The float current meter should be able to withstand the peak currents under a charge or discharge. A battery ampere-hour meter is useful in determining the number of discharges, the depth of discharge during a demand on the battery and amount of charge replaced after the demand. Individual cell voltages detect cell shorts and variations in cell condition. Battery terminal voltage evaluates the condition of the charging system.

7.4.2 DC system grounds and ground detection

Typically, a dc auxiliary power system is designed as an ungrounded system, instead of a grounded system, so that a low-resistance ground fault on one of its two polarities will not affect the operation of the system, thus increasing system reliability and continuity of service.

Copyright © 2005 IEEE. All rights reserved.

Copyright The Institute of Electrical and Electronics Engineers, Inc.
Provided by IHS under license with IEEE
No reproduction or networking permitted without license from IHS
Not for Resale

While double protected to single line faults, ungrounded systems are sensitive to relative changes in the grounding plane as a result of storm activity or transmission line faults. Also, when a ground occurs, the voltages to ground in the system adjust and capacitive charges redistribute. Sensitive relays have been known to energize momentarily while the cable and capacitive charge to ground shifts. Electronic loads, such as inverters and protective relays, with instantaneous under-voltage trips have operated erroneously. Sufficient redundancy and confirmation signals should be used in any logic which is dependent on the voltage of the dc system. Many relays with dc coils have low dropout voltages and are not affected by the momentary line voltage dips.

A grounded system design may be used if there is a desire to isolate low-resistance ground faults by means of protective devices. Positive ground systems are used in telecommunications to add cathodic protection to the buried wires. Negative ground systems are used in wireless communication, similar to automotive applications.

Ground detection should be provided for an ungrounded dc auxiliary power system. It is recommended that ground fault resistance magnitude also be monitored so as to lessen the likelihood of a low-resistance (polarity-to-polarity) fault caused by multiple grounds occurring and affecting the operation of the dc load(s). A symmetrical deterioration occurs when the insulation resistance of all conductors in the system to be monitored decreases approximately similarly. An asymmetrical deterioration occurs when the insulation resistance of, for example, one conductor decreases substantially more than that of another conductor.

Symmetrical and asymmetrical deterioration of insulation shall be monitored. Since multiple high resistive grounds are frequently present on a distribution system, a ground detection system that actively and continuously evaluates both the positive and the negative leg of the dc system is preferred.

Figure 4 shows a balanced ground detection design for an ungrounded system that may be manually placed in an unbalanced ground detection scheme by depressing the manual push buttons. A galvanometer or milli-ammeter provides indication and recording capability. The ground detector should provide a high polarity-to-ground resistance so that a single ground occurring on the system will not affect the operation of that system. Consideration should be given to the individual load (device) characteristics in order to determine the magnitude of ground resistance that could initiate operation of normally de-energized loads or inhibit drop-out of normally energized loads. A conservative approach to determine the ground detector alarm setpoint for a dc system is to measure the normal ground leakage current of the system and set the ground detector to alarm at that value plus a margin to be determined by engineering judgment. This approach will result in a very sensitive ground detection system that will alarm on a high resistance ground. A suitable, less sensitive, ground detector alarm setpoint may be determined by the method provided in Annex D. Annex D provides guidance for the determination of: a) the threshold value of ground fault resistance that may affect equipment operation if a second ground occurs in an ungrounded dc auxiliary power system and b) a suitable, less sensitive, ground detector alarm setpoint.

7.4.3 DC bus undervoltage alarm

The function of the dc bus undervoltage alarm is to alert the operator that the battery is being discharged. The dc bus undervoltage relay should be adjustable and set to alarm at a voltage slightly less than the open circuit voltage of the battery (e.g., approximately 119 V for a 58-cell, 125 V battery) rather than at the minimum allowable system voltage (typically 105 V for a 125 V system). This higher setting will alert the operator whenever the battery is supplying energy to the dc bus load (e.g., more load than the charger can handle), sufficiently early to take appropriate corrective action.

7.5 Special dc loads

The following equipment characteristics and system design features should be given consideration when sizing and selecting equipment.

Copyright © 2005 IEEE. All rights reserved.

Copyright The Institute of Electrical and Electronics Engineers, Inc.
Provided by IHS under license with IEEE
No reproduction or networking permitted without license from IHS
Not for Resale

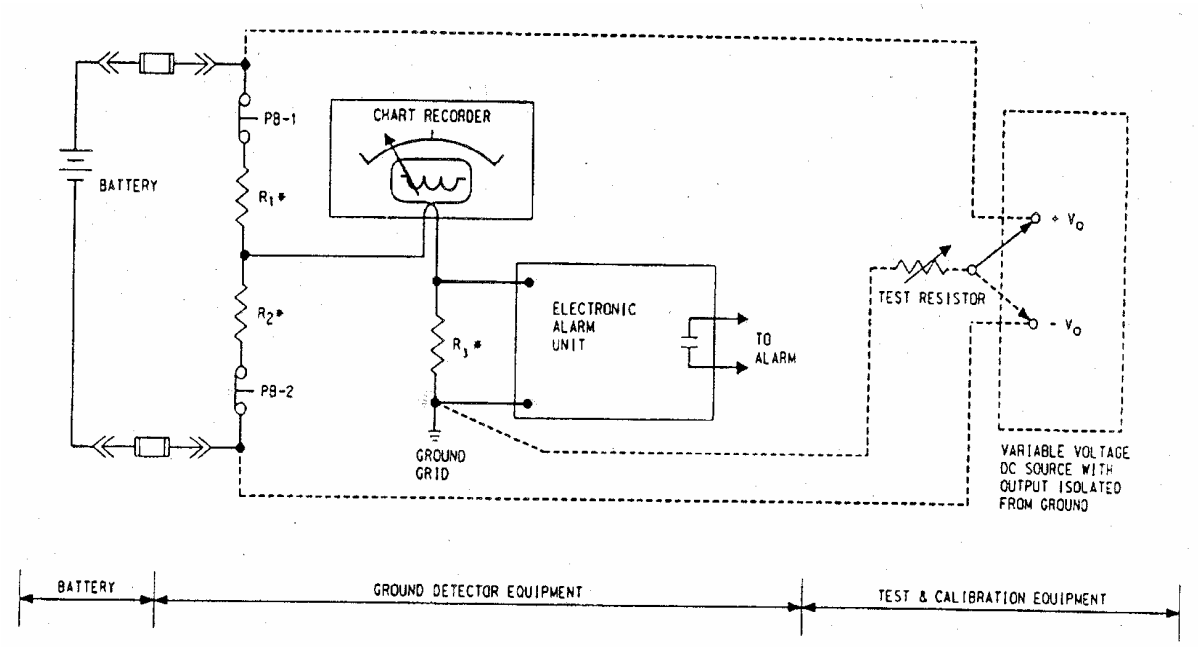

NOTES:

1—PB = Pushbutton

2— Fuse holder with fuse

3— "- - - - - - - -" Test equipment

4—* Resistance will vary with different applications

Figure 4—Ground detection for an ungrounded dc system

7.5.1 Load transfers

If the dc system design is such that a load group can be transferred to another dc source during equalizing, testing, etc., that source (battery, charger, and distribution equipment) should be sized to supply both (original plus transferred) load groups. This would be typical of a system with a cross-tie feature.

For designs in which the battery is equalized while connected to the load, and include an inverter with a normal ac power supply (transformer/rectifier unit), the ac supply should be designed so that it supplies the inverter while the charger is at equalize voltage. If the ac supply is so designed, and the battery equalize voltage becomes higher than the output voltage of the transformer/rectifier unit, the inverter load will transfer from the transformer/rectifier unit to the dc system, imposing additional load on the battery charger. In this instance, the total inverter load should be included as a load when the charger is sized.

7.5.2 Constant power dc loads

A dc load such as an inverter, which requires constant power, demands more current as the dc supply voltage decreases (such as when it is being powered from an isolated battery). This increase in load current results in a more rapid discharge of the battery. Although this effect may be partially (or completely) offset

Copyright © 2005 IEEE. All rights reserved.

Copyright The Institute of Electrical and Electronics Engineers, Inc.
Provided by IHS under license with IEEE
No reproduction or networking permitted without license from IHS
Not for Resale

by other loads (resistance type) that demand less current as the dc supply voltage decreases, it should be considered when sizing the battery. If the inverter is a significant percentage of the load on the battery, use of the worst-case end-of-duty-cycle battery voltage for calculating the inverter current may result in an uneconomical amount of design margin in the battery. In these cases it may be more realistic to calculate the inverter current by using a voltage value that approximates the average of the rated voltage and the end-of-duty-cycle voltage.

7.5.3 Switching surges

Highly inductive loads may generate surges when de-energized that, if not suppressed, may impress voltage spikes on the dc system. For such loads, surge-suppression networks are recommended.

7.5.4 Electrical noise

Filtering of electrical noise should be considered in order to minimize feedback into the dc system. Sources of such noise include switching power supplies in dc-to-dc converters and dc-to-ac inverters. In ungrounded dc systems, filtering should not establish additional conductive paths, in the power frequency range, to ground.

7.6 Design features to assist in battery testing

The design features of each dc system should provide an effective and safe means to periodically perform a capacity discharge test on each battery. Figure 1 provides one configuration that allows the battery to be isolated from the dc system for testing via a dedicated *test* circuit breaker in the associated distribution panel. This test breaker should be maintained in the *open* position during all modes of system operation, except during the battery test, with an alarm in the main control room when this breaker is closed. Cables from *this* test circuit breaker should be routed to a convenient location and terminated so that connection to a discharge load bank is convenient. This method (or similar means) for a safe connection of temporary discharge test cables should be provided.

7.7 Cross-tie between buses

Cross-ties between dc distribution buses may be utilized to supply critical loads when a battery or charger is taken out of service for maintenance or testing. Cross-ties can also provide beneficial switching flexibility during such situations and can aid in accomplishing orderly plant shutdowns. A cross-tie to any independent battery system is acceptable provided the independent battery system meets the sizing requirements of 7.5.1. One acceptable design provides a manually operated circuit breaker at each end of the cross-tie. The *cross-tie* circuit breakers should be normally *open* and should activate an alarm in the main control room if either is closed. Operating procedures should clearly define the operation of the cross-tie breakers. If cross-tie operation results in paralleling two batteries, the duration of parallel operation should be limited to the time required for switching so as to reduce the impact that circulating currents may have on battery capacity. If a longer duration of parallel operation is required, the increased available short-circuit current, resulting from the parallel sources, should also be considered.

For Class 1E nuclear applications, a cross-tie to any independent dc system, other than the dc system in the redundant safety division, is acceptable only during cold shutdown or refueling modes, and only if it can be shown that the cross-tie will not impair the ability of the Class 1E dc system to perform its safety function. In multi-unit nuclear stations, Class 1E dc systems shall not be shared between units unless it can be shown that such sharing will not impair their ability to perform their safety functions.

Copyright © 2005 IEEE. All rights reserved.

Copyright The Institute of Electrical and Electronics Engineers, Inc.
Provided by IHS under license with IEEE
No reproduction or networking permitted without license from IHS
Not for Resale

7.8 Qualification

Distribution equipment should be qualified for the application.

For Class 1E nuclear applications, distribution equipment shall be qualified in accordance with IEEE Std 649 (as applicable). Cable, field splices, and connections shall be qualified in accordance with IEEE 383™-1974 (R1992) [B5].

7.9 Available short-circuit current

For the purpose of determining the maximum available short-circuit current (the required interrupting capacity for feeder breakers/fuses and withstand capability of the distribution buses and disconnecting devices), the total short-circuit current is the sum of that delivered by the battery, charger, and motors (as applicable). When a more accurate value of maximum available short-circuit current is required, the analysis should account for interconnecting cable resistance.

7.9.1 Batteries

The current that a battery will deliver on short circuit depends on the total resistance of the short-circuit path. A conservative approach in determining the short-circuit current that the battery will deliver at 25 °C is to assume that the maximum available short-circuit current is 10 times the 1 min ampere rating (to 1.75 V per cell at 25 °C and specific gravity of 1.215) of the battery. When a more accurate value is required, the short-circuit current for the specific application should be calculated (see Annex C) or actual test data should be obtained from the battery manufacturer. The battery nominal voltage should be used when calculating the maximum short-circuit current. Tests have shown that an increase in electrolyte temperature (above 25 °C) or elevated battery terminal voltage (above nominal voltage) will have no appreciable effect on the magnitude of short-circuit current delivered by a battery (see Stationary Battery Short-Circuit Test Report [B22] and Stationary Battery Short-Circuit Test Report [B23]).

7.9.2 Chargers

The charger current limit circuitry may require two cycles (ac) to clamp. The maximum current that a charger will deliver into a short circuit after this period, coincident with the maximum battery short-circuit current, is determined by the charger current-limit circuit (see Annex E). When the battery charger is connected in parallel with the battery, the battery capacitance will prevent the battery charger contribution from rising instantaneously. Therefore the maximum current that a charger will deliver on short circuit will not typically exceed 150% of the charger full load ampere rating. Instantaneous battery charger current rise should only become a concern during periods when the battery is disconnected.

7.9.3 Motors

DC motors, if operating, will contribute to the total fault current. The maximum current that a dc motor will deliver to a short circuit at its terminals is limited by the effective transient armature resistance (rd') of the motor. For dc motors of the type, speed, voltage, and size typically used in generating stations, rd' is in the range of 0.1 to 0.15 per unit (see AIEE Committee Report [B1]). Thus, the maximum fault current for a short at the motor terminals will typically range from 7 to 10 times the motor's rated armature current. Therefore, it is conservative to estimate the maximum current that a motor will contribute to a fault as 10 times the motor's rated full load current. When a more accurate value is required, the short-circuit contribution should be calculated using specific rd' data for the specific motor, or actual test data should be obtained from the motor manufacturer. For additional accuracy, the calculation should account for the resistance of the cables between the motor and the fault.

Copyright © 2005 IEEE. All rights reserved.

Copyright The Institute of Electrical and Electronics Engineers, Inc.
Provided by IHS under license with IEEE
No reproduction or networking permitted without license from IHS
Not for Resale

8. Spare equipment

The need for spare equipment/components depends on system design features as well as operating requirements and restrictions such as those imposed on a nuclear generating station by the technical specifications. Other factors, such as operating experience, the availability of replacement equipment/parts, manufacturing lead time, the capabilities of performing in-house repairs, and component failure rates should be given consideration in determining the specific components that should be maintained as spare parts. For example, if the system design provides a readily available back-up battery charger, the need for maintaining spare battery-charger components could be reduced and possibly eliminated.

Other considerations, such as shelf life, may make it undesirable to obtain spares at an early stage in plant life. For example, spare battery cells can typically be maintained for only one year in the dry state (or three to six months when wet), and thereafter should be charged and maintained the same as a battery in service. With adequate design margin, the battery may be able to fulfill the service requirements with one or more cells electrically removed. The quantity of batteries provided and the capability to utilize back-up battery capacity through the use of cross-tie circuits may also be factors in determining the need and urgency for obtaining spare cells.

In any case, an evaluation should be performed to determine the need for spare equipment based on the combination of system design features, operating requirements, etc.

Copyright © 2005 IEEE. All rights reserved.

Copyright The Institute of Electrical and Electronics Engineers, Inc.
Provided by IHS under license with IEEE
No reproduction or networking permitted without license from IHS
Not for Resale

Annex A

(informative)

Bibliography

[B1] AIEE Committee Report, Maximum Short-Circuit Current of DC Motors and Generators, *AIEE Transactions*, vol. 69, pt. 1, pp. 146-149, 1950.

[B2] IEEE 100™, *The Authoritative Dictionary of IEEE Standards Terms*, Seventh Edition.[6,7]

[B3] IEEE Std 308™-2001, IEEE Standard Criteria for Class 1E Power Systems for Nuclear Power Generating Stations.

[B4] IEEE Std 336™-1985 (R1991), IEEE Standard Installation, Inspection, and Testing Requirements for Power, Instrumentation, and Control Equipment at Nuclear Facilities.

[B5] IEEE Std 383™-1974 (R1992), IEEE Standard for Type Test of Class 1E Electric Cables, Field Splices, and Connections for Nuclear Power Generating Stations .

[B6] IEEE Std 384™-1992 (R1998), IEEE Standard Criteria for Independence of Class 1E Equipment and Circuits.

[B7] IEEE Std 450™-2002, IEEE Recommended Practice for Maintenance, Testing, and Replacement of Vented Lead-Acid Batteries for Stationary Applications.

[B8] IEEE Std 535™-1986 (R1994), IEEE Standard for Qualification of Class 1E Lead Storage Batteries for Nuclear Power Generating Stations.

[B9] IEEE Std 603™-1998, IEEE Standard Criteria for Safety Systems for Nuclear Power Generating Stations.

[B10] IEEE Std 627™-1980 (R1996), IEEE Standard for Design Qualification of Safety System Equipment Used in Nuclear Power Generating Stations.

[B11] IEEE Std 650™-1990, IEEE Standard for Qualification of Class 1E Static Battery Chargers and Inverters for Nuclear Power Generating Stations.

[B12] IEEE Std 690™-1984, Standard for the Design and Installation of Cable Systems for Class 1E Circuits in Nuclear Power Generating Stations.

[B13] IEEE Std 741™-1997, Standard Criteria for the Protection of Class 1E Power Systems and Equipment in Nuclear Power Generating Stations.

[B14] IEEE Std 1106™-1995, IEEE Recommended Practice for Maintenance, Testing, and Replacement of Nickel-Cadmium Storage Batteries for Generating Stations and Substations.

[B15] IEEE Std 1187™-1996, IEEE Recommended Practice for Installation Design and Installation of Valve-Regulated Lead-Acid Storage Batteries for Stationary Applications.

[6] The IEEE standards or products referred to in this annex are trademarks of the Institute of Electrical and Electronics Engineers, Inc.

[7] IEEE publications are available from the Institute of Electrical and Electronics Engineers, Inc., 445 Hoes Lane, Piscataway, NJ 08854, USA (http://standards.ieee.org/).

Copyright © 2005 IEEE. All rights reserved.

Copyright The Institute of Electrical and Electronics Engineers, Inc.
Provided by IHS under license with IEEE
No reproduction or networking permitted without license from IHS
Not for Resale

[B16] IEEE Std 1188™-1996, IEEE Recommended Practice for Maintenance, Testing, and Replacement of Valve Regulated Lead-Acid Batteries (VRLA) for Stationary Applications.

[B17] IEEE Std C37.16™-1997, IEEE Standard for Switchgear -Low-Voltage Power Circuit Breakers and AC Power Circuit Protectors—Preferred Ratings, Related Requirements and Application Recommendations.

[B18] IEEE Std C37.90™-1989 (R1994), IEEE Standard for Relays and Relay Systems Associated with Electric Power Apparatus.

[B19] NEMA MG 1-1998, Motors and Generators.[8]

[B20] NEMA PE 1-1992, Uninterruptible Power Systems.

[B21] NEMA PE 5-1996, Utility Type Battery Chargers.

[B22] Stationary Battery Short-Circuit Test Report, AEI Test No. 0591-1, May 1991, Alber Engineering, Inc.

[B23] Stationary Battery Short-Circuit Test Report, ATI Test No. 0792-1, July 1992, Alber Technologies, Inc.

[8] NEMA publications are available from Global Engineering Documents, 15 Inverness Way East, Englewood, CO 80112, USA (http:// global.ihs.com/).

Copyright © 2005 IEEE. All rights reserved.

Copyright The Institute of Electrical and Electronics Engineers, Inc.
Provided by IHS under license with IEEE
No reproduction or networking permitted without license from IHS
Not for Resale

Annex B

(informative)

Battery charger rating—sample calculations

B.1 Introduction

This annex outlines the method, including sample calculations, for determining the required rating of battery chargers, as recommended in 6.2 and 6.3.

B.2 Formulas

The station battery chargers should be sized in accordance with the following formulas:

$$I_1 = I_{LC} + (1.1 \text{ x } Q) / T \quad \text{(B.1)}$$

$$I_2 = I_{LC} + I_{LN} \quad \text{(B.2)}$$

where

I_1 is the minimum required charger rated output (in amperes). Battery manufacturers often recommend that the charging rate be limited, a typical values are 10% to 20% of the 8 h capacity. I_1 should be evaluated for the maximum and minimum values of I_{LC}.

I_2 is the minimum charger output (in amperes) that will supply the maximum operational load.

I_3 is the recommended charger rated output (in amperes); i.e., the larger of I_1 or I_2. If it can be demonstrated that the reduction in battery capacity that results during and following the application of L_n does not compromise the ability of the battery to satisfy its intended function, the user may select Equation (1) as the basis of sizing the battery charger(s). Battery manufacturers often recommend that the charging rate be limited, a typical values are 10% to 20% of the 8 h capacity. I_3 should be evaluated for the maximum values of I_{LC} .

I_{LC} is the continuous dc load (in amperes), including future load growth.

I_{LN} is the largest combination of non-continuous loads (as defined in IEEE Std 485-1997, 4.2.2) that would likely be connected to the bus simultaneously during normal plant operation, including periodic testing of dc components such as emergency lighting and emergency oil pumps.

1.1 is the constant that compensates for the battery losses.

Q is the discharge from the battery measured in ampere-hours. After discharge testing as defined in IEEE Std 450-2000 [B7], it is convenient to assure that the ampere-hours removed by the test can be replaced in 8 h to 24 h. For users meeting the requirements of IEEE 308-2001[B2], the ampere-hours removed by the duty cycle is appropriate.

T is the time to recharge the battery to approximately 95% of capacity (in hours). To minimize dc system downtime, a reasonable recharge time should be selected; 8 h to 24 h is recommended. It is recommended that the battery manufacturer be consulted for values of T less than 8 h.

Copyright © 2005 IEEE. All rights reserved.

Copyright The Institute of Electrical and Electronics Engineers, Inc.
Provided by IHS under license with IEEE
No reproduction or networking permitted without license from IHS
Not for Resale

The battery charger specification should include (or account for) any abnormal service conditions. For example, ambient temperature, altitude, etc. may affect the charger capacity as noted in NEMA PE5-1983.

B.3 Sample calculations

Example 1:

Determine the rating of the charger required for a battery where the continuous dc load, including future load growth, is 100 A; the largest combination of non-continuous loads is 80 A; ampere-hours discharged from the battery is 400 Ah (rating of the battery at 8 h rate); with 12 h to recharge the battery (no abnormal service conditions).

$$I_1 = 100 + [1.1 \times 400] / 12 \quad \text{(B.3)}$$

$$I_1 = 100 + 36.7 = 136.7 \text{ A} \quad \text{(B.4)}$$

To account for the largest combination of non-continuous loads, the following applies:

$$I_2 = 100 + 180 = 180 \text{ A} \quad \text{(B.5)}$$

$$I_3 = 180 \text{ A recommended charger rated output} \quad \text{(B.6)}$$

Example 2:

Determine the rating of the charger required for a battery where the continuous dc load, including future load growth, is 300 A; the largest combination of non-continuous loads is 100 A; the ampere-hours discharged from the battery is 1200 Ah (rating of the battery at 8 hour rate); with 10 h to recharge the battery (no abnormal service conditions).

$$I_1 = 300 + [1.1 \text{ x } 1200] / 10 \quad \text{(B.7)}$$

$$I_1 = 300 + 132 = 432 \text{ A} \quad \text{(B.8)}$$

To account for the largest combination of non-continuous loads, the following applies:

$$I_2 = 300 + 100 = 400 \text{ A} \quad \text{(B.9)}$$

$$I_3 = 432 \text{ A recommended charger rated output} \quad \text{(B.10)}$$

Copyright © 2005 IEEE. All rights reserved.

Copyright The Institute of Electrical and Electronics Engineers, Inc.
Provided by IHS under license with IEEE
No reproduction or networking permitted without license from IHS
Not for Resale

Annex C

(informative)

Batteries, available short-circuit current—sample calculations

C.1 Introduction

The current that a battery will deliver on short circuit depends on the total resistance of the short-circuit path. A conservative approach in determining the short-circuit current that the battery will deliver at 25 °C is to assume that the maximum available short-circuit current is 10 times the 1 min ampere rating (to 1.75 V per cell at 25 °C and specific gravity of 1.215) of the battery. As recommended in 7.9.1, a more accurate value for the short-circuit current for the specific application may be calculated or actual test data may be obtained from the battery manufacturer. Tests have shown that an increase in electrolyte temperature (above 25 °C) or elevated battery terminal voltage (above nominal voltage) will have no appreciable effect on the magnitude of short-circuit current delivered by a battery (see Stationary Battery Short-Circuit Test Report [B22] and see Stationary Battery Short-Circuit Test Report [B23]).

Although an increase in temperature will result in an increase in the chemical activity of the battery, it will also increase the resistance of the metallic components of the battery, thereby offsetting any appreciable change in the magnitude of short-circuit current the battery can deliver. However, the elevated temperature will result in the battery's capability to deliver the short-circuit current for a longer duration.

Elevated battery terminal voltage (above nominal voltage) during float and equalize charge does not increase the chemical energy available from the battery during short circuit. The effective voltage driving the short- circuit current is dependent on the acid concentration in direct contact with the active material in the plates of the cell. Therefore, the battery nominal voltage (2.00 V per cell) should be used when calculating the maximum short-circuit current.

C.2 Discussion

The total resistance is made up of two major parts as follows:

a) The apparent internal resistance of the battery

b) The external circuit resistance

The total internal resistance of the battery is equal to the sum of the internal resistance of the cells plus the resistances of the intercell connections. The value of internal cell resistance is a variable quantity that is significantly influenced by many factors; e.g., the temperature, the age, and the state of charge of the cell. The total external circuit resistance is the sum of the resistances of the various components; e.g., the connecting cables and the fault resistance.

The following sample calculations illustrate one method of calculating the internal resistance of any cell (utilizing manufacturer's published discharge characteristic curves for that cell) and then calculating the current that cell will deliver:

a) Through a bolted short-circuit at the cell terminals (i.e., zero external resistance)

b) Through a short circuit at the main distribution bus with a specific (0.01) external resistance and with no charger or motor contribution

Copyright © 2005 IEEE. All rights reserved.

--`,,`,`,,`,,-`-`,,`,,`,`,,`---

Copyright The Institute of Electrical and Electronics Engineers, Inc.
Provided by IHS under license with IEEE
No reproduction or networking permitted without license from IHS

Not for Resale

C.3 Sample calculations

a) Internal resistance of a cell can be calculated from the slope of the initial volts line. See Figure C.1, which shows a discharge characteristic curve for a typical 7 through 15 plate (total) cell.

$$R_t = R_p / N_p \quad \text{(C.1)}$$

where

R_t is the total internal resistance of cell (ohms)

R_p is the resistance per positive plate (ohms)

N_p is the quantity of positive plates

$R_p = (V_1 - V_2) / (I_2 - I_1)$ ohms per positive plate for any two voltage and current points along the line.

If we pick 1.90 V as V_1, and 1.50 V as V_2, I_1 is found to be 60 A/positive plate and I_2 is 370 A/positive plate.

Calculation:

$$R_p = (1.9 - 1.5) / (370 - 60) = 0.4 / 310 + 0.00129\ \Omega\text{/positive plate} \quad \text{(C.2)}$$

Assume that the cell being investigated has 15 (total) plates. Since the cell has 7 positive plates (connected in parallel), the total internal resistance is:

$$R_t = 0.00129 / 7 \quad \text{(C.3)}$$

$$R_t = 0.00018\ \Omega \quad \text{(C.4)}$$

b) The short-circuit current available at the cell terminals is found from Ohm's Law as follows:

$$I_c = E_c / R_t \quad \text{(C.5)}$$

where

I_c is the available short circuit current (in amperes).

E_c is the nominal cell voltage (2.00 V).

R_t is the total internal resistance of cell (ohms).

$$I_c = 2.00 / 0.00018 = 11\ 111\ \text{A} \quad \text{(C.6)}$$

c) The short-circuit current available at the main distribution bus (the load terminals of the main/battery circuit breaker) from a battery made up of 58 cells (with an average internal resistance of 0.00018 Ω as calculated in Equation C.6 above), with 0.010 Ω total external resistance, and with no charger or motor contribution, is found from Ohm's Law as follows:

Copyright © 2005 IEEE. All rights reserved.

Copyright The Institute of Electrical and Electronics Engineers, Inc.
Provided by IHS under license with IEEE
No reproduction or networking permitted without license from IHS
Not for Resale

where

I_B is the available short-circuit current (amperes) at load terminals of main/battery circuit breaker

E_B is the nominal battery voltage = (58 cells) (2.00 volts/cell) = 116 V

R_B is the total internal resistance of battery = (R_t/cell) (number of cells) = (0.00018 Ω/cell) (58 cells) = 0.01044

R_x is the total external circuit resistance [including resistance of main lead cables; intercell (if not included in R_B), inter-tier, and inter-rack connections; main circuit breaker or fuse; and the fault] = 0.0100 Ω

R_T is the total circuit resistance = $R_B + R_X$ = 0.01044 + 0.0100 = 0.02044 Ω

$$I_B = 116 \text{ V} / 0.02044\ \Omega = 5675 \text{ A} \quad \text{(C.7)}$$

The short-circuit currents calculated in Equation C.7 may, when combined with the charger and motor contribution, be used (as described in 7.9) to determine required interrupting capacity of the circuit breakers or fuses.

NOTE—For comparison, 10 times the 1 min ampere rating (to I.75 V per cell at 77 °F) of the battery is 10 × 1139 = 11 390 A.

Copyright © 2005 IEEE. All rights reserved.

Copyright The Institute of Electrical and Electronics Engineers, Inc.
Provided by IHS under license with IEEE
No reproduction or networking permitted without license from IHS
Not for Resale

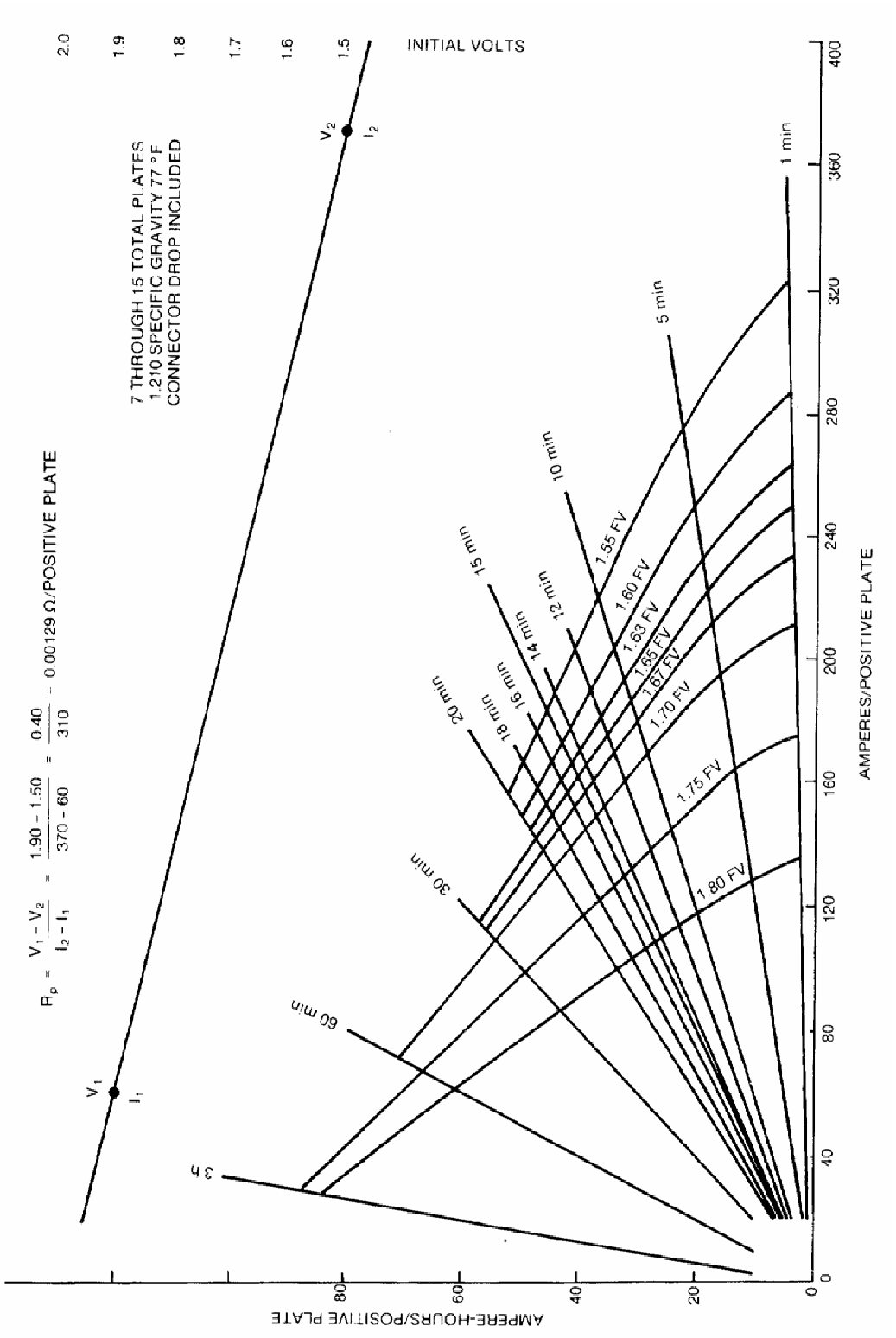

Figure C.1— Discharge characteristic curve for a typical 7 through 15 plate (total) cell

Copyright © 2005 IEEE. All rights reserved.

Copyright The Institute of Electrical and Electronics Engineers, Inc.
Provided by IHS under license with IEEE
No reproduction or networking permitted without license from IHS
Not for Resale

Annex D

(informative)

Effect of grounds on the operation of dc auxiliary power systems

D.1 Introduction

This annex provides guidance in determining: a) the threshold value of ground-fault resistance that may affect equipment operation if a second ground occurs in an ungrounded dc auxiliary power system and b) a suitable, less sensitive, ground-detector alarm setpoint.

D.2 Discussion

A single low-resistance ground on one of the two polarities of an ungrounded dc auxiliary power system will not affect the operation of the system. However, a ground of sufficiently low resistance on one polarity followed by a second ground can produce ground currents of sufficient magnitude to initiate operation of de-energized dc loads (devices) or inhibit dropout of energized dc loads (devices). The grounding configuration shown in Figure D.1(A) illustrates how multiple grounds could initiate operation of a de-energized load. This condition could result in false operation of a normally de-energized load (device). The grounding configuration shown in Figure D.1(B) could exist in a normally energized logic circuit, such as an Engineered Safety Feature or a Reactor Protection System, and could inhibit the drop-out of energized loads (devices). Figure D.2 shows three ground combinations which could short-out an actuating coil and/or the dc source. For low-resistance grounds, a fuse or circuit breaker would trip a circuit designed with overload and fault protection, clearing the faulted circuit and dropping out all energized loads [Figure D.2 (B)] or preventing operation of de-energized equipment [Figure D.2(A) and Figure D.2(C)] on that circuit. A fault configured as in Figure D.2(A) or Figure D.2(C) could inhibit the trip of a breaker for switchgear, generator, or a large motor. The ground configuration shown in Figure D.3(A) or Figure D.3(B) could cause the relay contacts associated with one piece of equipment in one circuit to affect the operation of a similarly grounded device in another circuit.

In order to determine the threshold resistance of a ground fault that, if followed by a solid ground, could initiate operation of a normally de-energized load or could inhibit dropout of a normally energized load; the most sensitive dc loads (devices) should be identified and their minimum pickup current and maximum dropout current should be evaluated.

D.3 Sample evaluations

Example 1 (Low-resistance device):

The control devices for a Type XYZ switchgear breaker trip device are rated at 125 V dc. The closing coil and trip coil are as given below.

Assuming a dc system operating (float) voltage of 130 V, the current through the closing coil or trip coil with a 20 kΩ ground in parallel with the control contacts [Figure D.1(A)] would be 130 V / (20 kΩ + 20.83 Ω) = 6.5 mA. Since the minimum pickup current for the coils is 4.32 A (closing) and 3.36 A (trip), these values are well above the value of current (6.5 mA) that would be experienced with a 20 kΩ total ground-fault resistance. Therefore, a 20 kΩ ground, followed by a solid ground, would not cause spurious operation of the switchgear breaker. The threshold value of ground-fault resistance is (130 V / 3.36 A) - 20.83 Ω = 17.86 Ω, neglecting the effect of the ground detector resistance.

Copyright © 2005 IEEE. All rights reserved.

Copyright The Institute of Electrical and Electronics Engineers, Inc.
Provided by IHS under license with IEEE
No reproduction or networking permitted without license from IHS
Not for Resale

Assuming that this circuit breaker trip coil has been identified as the most sensitive (lowest pickup or dropout current) device connected to the dc auxiliary power system, the ground detector alarm can be set at any value above 17.86 Ω; the appropriate margin (above the threshold value) being based on engineering judgment. A setpoint of 20 Ω will alarm at a ground fault current (3.18 A) that is 5.4% below the minimum pickup current (3.36 A). This example is for illustrative purposes only since most ground detection systems will detect grounds several orders of magnitude greater than 20 Ω.

Example 2 (High-resistance device):

The operating characteristics of a normally energized Type XYZ 125 V dc relay are as given in the following paragraph.

Assuming a dc system operating (float) voltage of 130 V, the current through the relay coil with a 20 kΩ ground in parallel with the control contacts [Figure D.1(B)], after they open, would be 130 V / (20 kΩ + 2 kΩ) = 5.91 mA. Since the maximum dropout current for the relay is 6.25 mA, a 20 kΩ ground followed by a solid ground would be of high enough total resistance to produce a low enough ground current that would not prevent the relay from dropping out when the control contacts open. The threshold value of ground-fault resistance is (130 V / 0.00625 A) – 2 000 Ω = 18 800 Ω, neglecting the effect of the ground detector resistance. Assuming that this relay has been identified as the most sensitive (lowest pickup or dropout current) device connected to the dc auxiliary power system, the ground detector alarm can be set at any value above 18 800 Ω; the appropriate margin (above the threshold value) being based on engineering judgment. A setpoint of 20 kΩ will alarm at a ground fault current (5.91 mA) that is 5.4% below the maximum dropout current (6.25 mA).

Copyright © 2005 IEEE. All rights reserved.
--`,,`,`,,`-`-`,,`,,`,`,,`---
Copyright The Institute of Electrical and Electronics Engineers, Inc.
Provided by IHS under license with IEEE
No reproduction or networking permitted without license from IHS
Not for Resale



Figure D.1—Ground faults may energize a normally de-energized device or prevent de-energizing a normally energized device

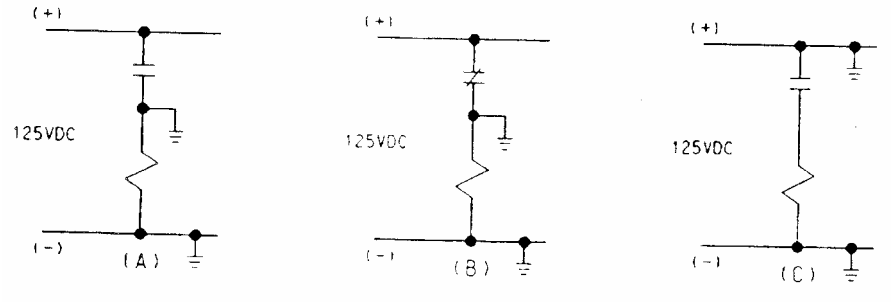

Figure D.2—Ground faults may cause contacts in one circuit to actuate devices in a different circuit

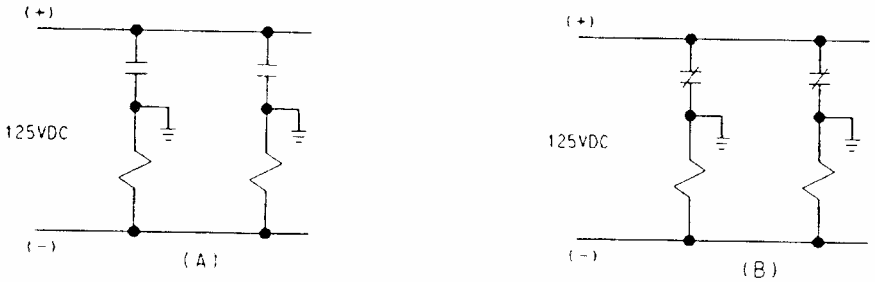

Figure D.3—Gorund faults may cause contacts in one circuit to actuate devices in a different circuit

Copyright © 2005 IEEE. All rights reserved.

Copyright The Institute of Electrical and Electronics Engineers, Inc.
Provided by IHS under license with IEEE
No reproduction or networking permitted without license from IHS
Not for Resale

Annex E

(informative)

Battery charger, short-circuit current contribution

E.1 Abstract

This annex provides a rationale for the selection of the maximum value of battery charger short-circuit current that will occur coincident with the maximum battery short-circuit current. The reason for determining the maximum combined short-circuit current is to specify equipment that is suitable for the expected fault current. It is necessary to include the contributions from connected motors, battery chargers, and batteries when calculating the total short circuit current for a fault in a dc system. For a typical station battery and a current-limited charger, it can be shown that the peak short-circuit currents occur at different times so that the charger current-limited value added to the battery peak value provides a conservative total fault-current value. The fault current contribution from a typical battery charger is current-limited to a value not greater than 150% of the charger current rating.

E.2 Discussion

E.2.1 Charger contribution

Tests on some current-limited SCR type battery chargers have shown that when the battery charger is isolated from a system, the initial short-circuit current can exceed the current-limited value. A large transient current spike may occur due to the stored energy in filter circuits (capacitors). This instantaneous peak short-circuit current may approach a value 200 times the charger rated current. However, the time duration of the initial transient current is short (in the order of 5 μs) and generally does not effect the ratings of equipment and protective devices.

In current-limited chargers, the current-limiting circuits will typically act to reduce the current after the first zero crossing (four-half cycles, 32 ms, or less) if internal protective devices such as rectifier fuses have not already acted to clear the fault. It is therefore conservative to assume that the maximum sustained fault current after 32 ms is the current-limiting value, which is generally not greater than 150% of the charger current rating.

E.2.2 Battery contribution

The fault current from a large lead storage battery resulting from a bolted short at the battery terminals will typically exhibit a rate-of-rise that delivers the peak current within 17 ms (see Stationary Battery Short-Circuit Test Report [B22] and Stationary Battery Short-Circuit Test Report [B23]). The fault current for a short at the dc distribution switchgear or panelboard will peak later (typically within 34 ms to 50 ms) due to the inductance of the dc system in series with the fault. The magnitude of the fault current for a short at the distribution bus will also be lower than the value at the battery due to the resistance of the cables between the battery terminals and the bus.

E.2.3 Combined effect of currents from battery and charger

For a typical dc system, the short-circuit current from the charger has already peaked and decayed before the short-circuit current from the battery reaches its peak. Due to this battery time constant, the maximum coincident short-circuit current can be conservatively calculated as the sum of the peak short-circuit current from the battery and the current-limit value from the charger (Figure E.1).

Copyright © 2005 IEEE. All rights reserved.

Copyright The Institute of Electrical and Electronics Engineers, Inc.
Provided by IHS under license with IEEE
No reproduction or networking permitted without license from IHS
Not for Resale

Each installation should be evaluated by the design engineer to determine the magnitude of the short-circuit currents from the battery, charger, motors, etc. Any non-typical installation should be evaluated by the design engineer to verify that the peak values of the battery and charger short-circuit currents are not coincident.

E.3 Sample evaluation

The following example illustrates one method for determining the relative fault-current contributions of a battery and a current-limited charger to a fault at the distribution panel bus:

Charger and feeder cables:

Charger current rating: I = 300 A

Charger current limit: I_c = (1.5) (300) = 450 A

Cable and breaker resistance: R_c = 0.0228

Battery and feeder cables:

Battery: 60 cells, rated 1950 Ah at 8 h rate.

Battery resistance under fault:

R_b = (0.0001131) (60 cells)

= 0.006786

Time to peak short-circuit current @ five-time constants = 11 ms

Battery cables: 2-1/C 350 kcmil cables/leg, each 40.5 ft

Total calculated loop resistance: R_2 = 0.0017

Total calculated inductance: L = 36.2 micro-Henries

The battery time constant and apparent inductance under short-circuit conditions are calculated as follows:

Battery time constant: T = (11 ms) / 5 = 2.2 ms

Battery inductance: $L_b = (T)(R_b)$ = (2.2E-3) (0.006786) = 14.9 micro-Henries

The time constant for the combination of the battery and cables is calculated as follows:

$$T_1 = (L_b + L) / (R_b + R_2) = (14.9\text{E-}6 + 36.2\text{E-}6) / (0.006786 + 0.0017) = 6 \text{ ms}$$

For a fault at the distribution panel bus:

Battery fault current: I_b = (2.00 V per cell) (60) / (R_b + R_2)

= 120 V / (0.006786 + 0.0017)

= 14 141 A

Battery fault current peaks at (5) (T_1) = (5) (6 ms) = 30 ms

The charger short-circuit contribution: I_c = 450 A

Conclusion:

As illustrated in Figure E.1, the maximum total combined short-circuit current is 14 141 + 450 = 14 591 A and is a maximum when the battery current peaks at 30 ms after the fault.

Copyright © 2005 IEEE. All rights reserved.

Copyright The Institute of Electrical and Electronics Engineers, Inc.
Provided by IHS under license with IEEE
No reproduction or networking permitted without license from IHS
Not for Resale

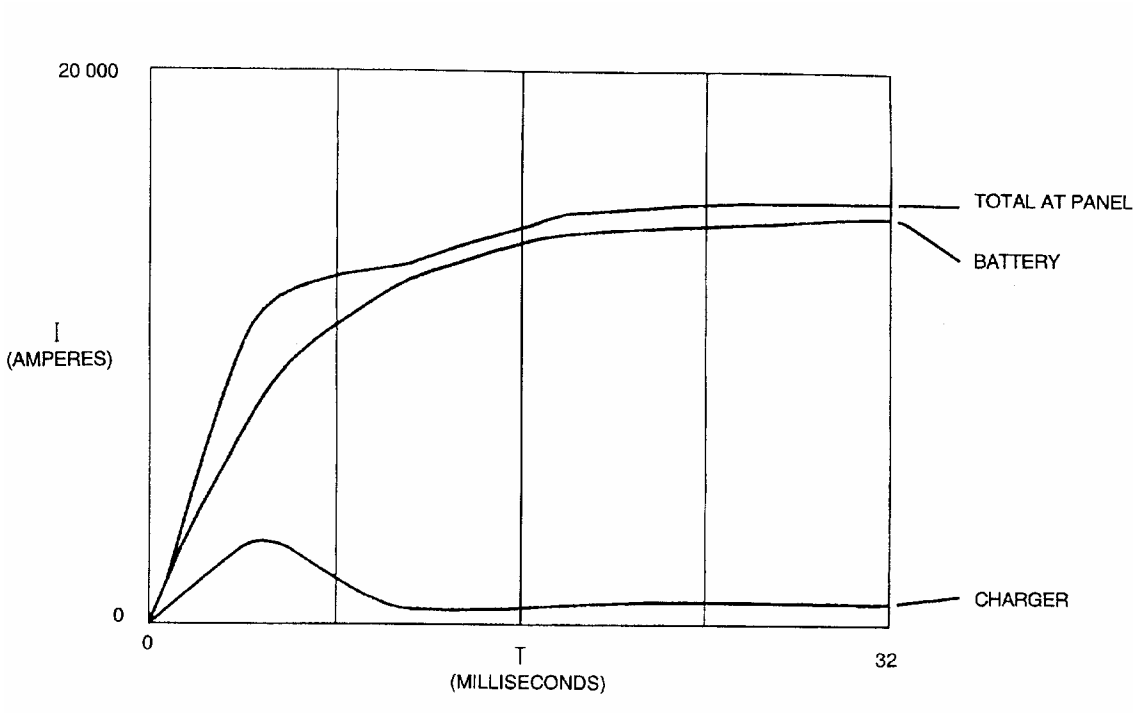

Figure E.1—Typical fault-current contributions at the dc bus with current-limited charger

Copyright © 2005 IEEE. All rights reserved.

Copyright The Institute of Electrical and Electronics Engineers, Inc.
Provided by IHS under license with IEEE
No reproduction or networking permitted without license from IHS
Not for Resale