An American National Standard

IEEE Recommended Practice for the Application and Testing of Uninterruptible Power Supplies for Power Generating Stations

Sponsor
Power Generation Committee
of the
IEEE Power Engineering Society

Approved December 12, 1985
IEEE Standards Board

Approved June 9, 1986
American National Standards Institute

© Copyright 1986 by
The Institute of Electrical and Electronics Engineers, Inc
345 East 47th Street, New York, NY 10017, USA
No part of this publication may be reproduced in any form, in an electronic retrieval system or otherwise, without prior written permission of the publisher.

Copyright The Institute of Electrical and Electronics Engineers, Inc.
Provided by IHS under license with IEEE
No reproduction or networking permitted without license from IHS
Not for Resale

IEEE Standards documents are developed within the Technical Committees of the IEEE Societies and the Standards Coordinating Committees of the IEEE Standards Board. Members of the committees serve voluntarily and without compensation. They are not necessarily members of the Institute. The standards developed within IEEE represent a consensus of the broad expertise on the subject within the Institute as well as those activities outside of IEEE which have expressed an interest in participating in the development of the standard.

Use of an IEEE Standard is wholly voluntary. The existence of an IEEE Standard does not imply that there are no other ways to produce, test, measure, purchase, market, or provide other goods and services related to the scope of the IEEE Standard. Furthermore, the viewpoint expressed at the time a standard is approved and issued is subject to change brought about through developments in the state of the art and comments received from users of the standard. Every IEEE Standard is subjected to review at least once every five years for revision or reaffirmation. When a document is more than five years old, and has not been reaffirmed, it is reasonable to conclude that its contents, although still of some value, do not wholly reflect the present state of the art. Users are cautioned to check to determine that they have the latest edition of any IEEE Standard.

Comments for revision of IEEE Standards are welcome from any interested party, regardless of membership affiliation with IEEE. Suggestions for changes in documents should be in the form of a proposed change of text, together with appropriate supporting comments.

Interpretations: Occasionally questions may arise regarding the meaning of portions of standards as they relate to specific applications. When the need for interpretations is brought to the attention of IEEE, the Institute will initiate action to prepare appropriate responses. Since IEEE Standards represent a consensus of all concerned interests, it is important to ensure that any interpretation has also received the concurrence of a balance of interests. For this reason IEEE and the members of its technical committees are not able to provide an instant response to interpretation requests except in those cases where the matter has previously received formal consideration.

Comments on standards and requests for interpretations should be addressed to:

Secretary, IEEE Standards Board
345 East 47th Street
New York, NY 10017
USA

Copyright The Institute of Electrical and Electronics Engineers, Inc.
Provided by IHS under license with IEEE
No reproduction or networking permitted without license from IHS
Not for Resale

Foreword

(This Foreword is not a part of ANSI/IEEE Std 944-1986, IEEE Recommended Practice for the Application and Testing of Uninterruptible Power Supplies for Power Generating Stations.)

Vital ac power systems play an ever increasing role in generating station control and information systems. This recommended practice fulfills a need within the industry to provide criteria and recommendations for the application and testing of vital ac systems. The features described are applicable to Class lE and non-Class lE installations.

This criteria may be used separately, and, when combined with applicable portions of ANSI/IEEE Std 650-1979, IEEE Standard for Qualification of Class lE Static Battery Chargers and Inverters for Nuclear Power Generating Stations, will provide the user with a general guide to the application and testing of vital ac systems.

The IEEE will maintain this recommended practice current with the state of the technology. Comments on this criteria and suggestions for additional material that should be included are invited.

This recommended practice was prepared by the Working Group on Vital AC Power, Nuclear Power Subcommittee of the Power Generation Committee of the IEEE Power Engineering Society. The members of the working group were as follows:

K. Hancock, *Chair*

A. Benge	D. C. Griffith	R. Lyon
G. Engmann	D. Kelly	D. Mogen
A.S. Gill	K. F. Liao	G. Wu

At the time it approved this recommended practice, the Nuclear Power Subcommittee of the Power Generation Committee had the following membership:

P. A. Nevins, *Chair*

R. W. Cantrell	W. Landan	J. E. Stoner, Jr
G. Engmann	S. H. Pettersen	B. Treece
K. Hancock	D. A. Raquet	
M. E. Jackowski	K. Sebra	

The following persons were on the balloting committee that approved this document for submission to the IEEE Standards Board:

W. W. Avril	G. Engmann	R. E. Penn
M. S. Baldwin	W. M. Fenner	J. D. Plaxco
J. H. Bellack	A. H. Ferber	R. J. Reiman
I. B. Berezowsky	D. I. Gordon	D. E. Roberts
G. Berman	R. D. Handel	A. J. Spurgin
R. W. Cantrell	F. W. Keay	G. I. Stillman
H. E. Church	P. R. Landrieu	J. E. Stoner, Jr
R. S. Coleman	G. L. Luri	J. B. Sullivan
R. E. Cotta	J. T. Madill	T. R. Whittemore
M. L. Crenshaw	C. S. Mazzoni	J. P. Whooley
D. J. Damsker	M. W. Migliaro	
P. M. Davidson	J. T. Nikolas	

Copyright The Institute of Electrical and Electronics Engineers, Inc.
Provided by IHS under license with IEEE
No reproduction or networking permitted without license from IHS
Not for Resale

When the IEEE Standards Board approved this recommended practice on December 12, 1985, it had the following membership:

John E. May, *Chair*
John P. Riganati, *Vice Chair*
Sava I. Sherr, *Secretary*

James H. Beall
Fletcher J. Buckley
Rene Castenschiold
Edward Chelotti
Edward J. Cohen
Paul G. Cummings
Donald C. Fleckenstein
Jay Forster
Daniel L. Goldberg
Kenneth D. Hendrix
Irvin N. Howell
Jack Kinn
Joseph L. Koepfinger*
Irving Kolodny
R. F. Lawrence
Lawrence V. McCall
Donald T. Michael*
Frank L. Rose
Clifford O. Swanson
J. Richard Weger
W. B. Wilkens
Charles J. Wylie

*Member emeritus

--`,,`-`-`,,`,,`,`,,`---

Copyright The Institute of Electrical and Electronics Engineers, Inc.
Provided by IHS under license with IEEE
No reproduction or networking permitted without license from IHS
Not for Resale

CLAUSE PAGE

1. Scope 1

2. Definitions 1

3. References 3

4. Service Conditions 4

4.1 Usual Service Conditions 4
4.2 Unusual Service Conditions 5

5. Design Application Requirements 5

5.1 Background 5
5.2 Application 5
5.3 Performance Requirements 5
5.4 Considerations 5
5.5 Bypass Transformers and Voltage Regulators 9
5.6 Special Considerations 9
5.7 Source Requirements 10
5.8 Output Requirements 12
5.9 Controls, Instruments, and Alarms 14

6. Procurement Document Requirements 15

6.1 System Requirements 15
6.2 Component Requirements 17

7. Testing Requirements 18

7.1 General 18
7.2 Functional Unit Tests 18
7.3 UPS Tests 19
7.4 Test Specificatons 20

Copyright The Institute of Electrical and Electronics Engineers, Inc.
Provided by IHS under license with IEEE
No reproduction or networking permitted without license from IHS
Not for Resale

An American National Standard

IEEE Recommended Practice for the Application and Testing of Uninterruptible Power Supplies for Power Generating Stations

1. Scope

This recommended practice is intended to define the application and performance requirements for a low-voltage uninterruptible power supply (UPS) system used for service in power generating stations. This recommended practice addresses only requirements for semiconductor ac to ac converter systems (static) with dc electric energy storage capability. This recommended practice is not intended to address other types of UPS systems.

This recommended practice is intended to cover application requirements, such as load information and service conditions, performance requirements and design, routine testing requirements for inverters with or without rectifier/chargers, and transfer switches only. The application requirements for batteries and battery chargers are excluded from this recommended practice. They can be found in other documents.

This recommended practice is not intended to address equipment or component design requirements, safety-related design criteria, or requirements for equipment qualification and preoperational/surveillance testing.

2. Definitions

ac input: Electric power in the form of alternating current (ac) supplied to the uninterruptible power supplies (UPS) and bypass.

ambient temperature (general): The temperature of the medium, such as air, water, or earth into which the heat of equipment is dissipated.

battery, electric: A device that transforms chemical energy into electric energy.

Copyright © 1986 IEEE All Rights Reserved

Copyright The Institute of Electrical and Electronics Engineers, Inc.
Provided by IHS under license with IEEE
No reproduction or networking permitted without license from IHS
Not for Resale

blocking diode (uninterruptible power supplies) (UPS): A device that prevents the flow of current from the UPS rectifier to the battery, but permits the flow of current from the battery to the UPS inverter.

bypass transformer: A transformer that provides alternating-current power to the UPS loads when the UPS equipment fails, is temporarily overloaded, or is out of service for maintenance.

charger, battery: A device that can maintain an unidirectional current in a battery in the opposite direction to that during discharge thereby converting electric energy into chemical energy within the battery.

class lE (nuclear power generating station): The safety classification of the electrical equipment and electric systems that are essential to emergency reactor shutdown, containment isolation, reactor core cooling, and containment and reactor heat removal, or are otherwise essential in preventing significant release of radioactive material to the environment.

crest factor (periodic function): The ratio of its crest (peak, maximum) value to its root-mean-square value.

current limit (control): A control function that prevents current from exceeding its prescribed limits.

dc link: The direct-current power interconnection between rectifier or rectifier/charger and inverter function units.

design tests: Tests made to determine the adequacy of the design of a particular type, style, or model of equipment or its component parts to meet its assigned ratings and to operate satisfactorily under normal service conditions or under special conditions if specified.

efficiency (electric conversion): The ratio of output power to input power expressed in percentage.

field tests: Tests made on operating systems usually for the purpose of investigating the performance of the equipment or its component parts under conditions that may not have been duplicated in the factory.

functional unit: A system element that performs a task required for the successful operation of the system.

harmonic: The sinusoidal component of a periodic wave or quantity having a frequency that is an integral multiple of the fundamental frequency.

harmonic distortion (single and total): Distortion characterized by the appearance of harmonics in addition to the fundamental component. The total harmonic distortion is the ratio of the root-mean-square (rms) value of all the harmonics to the rms value of the fundamental.

inverter (electric power): A machine, device, or system that changes direct-current power to alternating-current power.

low-voltage system (electric power): An electric system having a maximum root-mean-square alternating-current voltage of 1000 V or less.

meantime between failures: The arithmetic average of operating times between failures.

meantime to repair: The arithmetic average of time required to complete a repair activity.

nonlinear load: A load with such characteristics that with an applied sinusoidal voltage the load current is not sinusoidal.

output voltage: The root-mean-square (rms) voltage (unless otherwise specified for a particular load) between the output terminals.

power factor (general): The ratio of total watts to the total root-mean-square (rms) volt-amperes.

qualification (nuclear power generating stations): A demonstration that illustrates that the equipment meets the design requirements.

rating (rating of electrical equipment): The whole of the electrical and mechanical quantities assigned to the machine, apparatus, etc, by the designer to define its working in specified conditions indicated in the rating nameplate.

rectifier: A device or assembly of devices that converts ac power into dc power to supply the input power to an inverter but not to a battery.

Copyright © 1986 IEEE All Rights Reserved

Copyright The Institute of Electrical and Electronics Engineers, Inc.
Provided by IHS under license with IEEE
No reproduction or networking permitted without license from IHS Not for Resale

rectifier/charger: A device that changes alternating-current power to direct-current power to feed either an inverter or a battery, or both.

routine test: Tests made by the manufacturer for quality control on every device or representative samples, or on parts and materials as required to verify during production that the product meets the design specifications.

safety-related (nuclear power generating station): Any Class lE power or protective system device included in ANSI/IEEE Std 308-1980 [2][1], Section 2 and ANSI/IEEE Std 603-1980 [3], Section 2.

slew rate: The change in frequency of a periodic waveform from one period to the immediately subsequent period divided by the average of the two periods.

static converter: A unit that employs static switching devices, such as controlled rectifiers, transistors, or magnetic amplifiers.

steady state: The condition in which some value, such as amplitude periodicity or rate of change, exhibits negligible change over an arbitrary long interval of time.

step load change (power supplies): An instantaneous change in load current (for example, zero to full load) for measuring the load regulation and recovery time.

transfer switch (emergency and standby power systems): A device for transferring one or more load conductor connections from one power source to another.

transient (industrial power and control): That part of the change in a variable that disappears during transition from one steady-state operating condition to another.

uninterruptible power supply system: A system that converts unregulated input power to voltage and frequency controlled filtered ac power that continues without interruption even with the deterioration of the input ac power.

vital loads: Vital instrumentation and control power systems identified in ANSI/IEEE Std 308-1980 [2] or other loads as specified that are important to plant operation or personnel safety, or both.

voltage imbalance factor: The ratio of the amplitudes of the negative-sequence component to the positive-sequence component of the line-line output voltage.

voltage regulator: A device that controls output voltage within a specific range when the input voltage and connected load are within specified ranges.

yearly average temperature: The time average of bulk air temperature taken over a period of one year.

3. References

This recommended practice shall be used in conjunction with the following publications:

[1] ANSI C84.1-1982, American National Standard Voltage Ratings for Electric Power Systems and Equipment (60 Hz).[2]

[2] ANSI/IEEE Std 308-1980, IEEE Standard Criteria for Class lE Power Systems for Nuclear Power Generating Stations.[3]

[3] ANSI/IEEE Std 603-1980, IEEE Standard Criteria for Safety Systems for Nuclear Power Generating Stations.

[4] ANSI/IEEE Std 650-1979, IEEE Standard for Qualification of Class 1E Static Battery Chargers and Inverters for Nuclear Power Generating Stations.

[1]The numbers in brackets correspond to the references listed in Section 3 of this recommended practice.
[2]ANSI publications are available from the Sales Department, American National Standards Institute, 1430 Broadway, New York, NY 10018.
[3]IEEE publications are available from IEEE Service Center, 445 Hoes Lane, Piscataway, NJ 08854.

Copyright © 1986 IEEE All Rights Reserved

Copyright The Institute of Electrical and Electronics Engineers, Inc.
Provided by IHS under license with IEEE
No reproduction or networking permitted without license from IHS Not for Resale

[5] IEC Publication 146-1973, Semiconductor Convertors.[4]

[6] IEC Publication 146-2-1974, Semiconductor Self-Commutated Convertors.

[7] NEMA PE5-1983, Constant Potential-Type Electric Utility (Semiconductors Static Convertor) Battery Charges.[5]

4. Service Conditions

These service conditions that are significant to the design, application, and qualification of uninterruptible power supplies are given in 4.1 and 4.2. The usual service conditions and their normal range are also defined to assist those responsible for equipment design and application.

Applications for conditions outside the normal range are not prohibited. Such unusual conditions should be clearly and completely defined and the equipment shall be designed and qualified accordingly.

4.1 Usual Service Conditions

The usual service conditions and their normal ranges are as follows:

4.1.1

Ambient temperature in the range of 10 °C – 40 °C with a yearly average of up to 25 °C. Calculations for equipment life shall be based on an ambient temperature of 25 °C.

4.1.2

Noncondensing relative humidity in the range of 10% – 95%.

4.1.3

Altitude of up to 3300 ft (1000 m) above sea level.

4.1.4

For nuclear power generating station Class lE applications the radiation type and irradiation (dose rate and total dose) shall be specified for each plant application.

4.1.5

The electrical service conditions shall be as defined in 5.7 and 5.8.

4.1.6

The seismic requirements shall be as specified for each plant application.

[4]IEC publications are available in the United States from the Sales Department, American National Standards Institute, 1430 Broadway, New York, NY 10018.
[5]NEMA publications are available from the National Electrical Manufacturers Association, 2101 L Street, NW, Washington, DC 20037.

--`,,`,,`-`-`,,`,,`,`,,`---

Copyright © 1986 IEEE All Rights Reserved

Copyright The Institute of Electrical and Electronics Engineers, Inc.
Provided by IHS under license with IEEE
No reproduction or networking permitted without license from IHS Not for Resale

4.1.7

The effects of externally generated radio-frequency interference (rfi) and electromagnetic interference (emi) are not considered to be significant in the normal operation of this equipment.

4.2 Unusual Service Conditions

When uninterruptible power supplies are applied outside the range given as usual service conditions, the applicable service conditions shall be specified in the procurement document. This includes the duration of excursions outside the normal service conditions. The uninterruptible power supplies shall be designed and qualified for these conditions.

5. Design Application Requirements

5.1 Background

The vulnerability of modern instrumentation and control systems to ac system disturbances has become increasingly evident in the last few years. These systems are constantly exposed to the threat of downtime, malfunction, or damage to sensitive equipment due to power disturbances. The use of line-voltage regulators and isolation transformers are only partially able to address the power disturbance problem. These devices are not effective for applications that require regulated uninterruptible power supplies.

5.2 Application

Because of the operational safety concerns in a power generating station, the vital instrumentation and control loads for most power generating stations are supplied by an uninterruptible power supply (UPS) system. The UPS system will provide stable power and minimize the effects of electric power supply disturbances and variations. For disturbances on or loss of the ac line, the UPS systems continue to supply the vital loads from a dc power source that includes a battery.

5.3 Performance Requirements

The UPS system must be capable of providing a reliable, regulated, and filtered source of uninterruptible power to the vital loads of a power generating station. To support this goal UPS systems are designed to supply power during power supply outages and to provide power conditioning when supply voltages and frequency variations exceed those allowable for the load. A properly selected UPS system will provide continuous power to the load throughout most disturbances encountered in the power supply system. Under certain conditions up to a 4.17 ms interruption in the power supply to the load may occur as the load is transferred from the inverter output to the bypass source or vice versa.

5.4 Considerations

In the selection of a UPS system careful consideration should be given to the types and characteristics of the load being supplied. Considerations shall include the factors listed in 5.4.1 through 5.4.3.5.

5.4.1 Load Identification

For identification purposes the loads to be supplied by an UPS may be categorized as follows:

1) Loads that cannot withstand a sustained loss of voltage

Copyright © 1986 IEEE All Rights Reserved

--`,,`-`-`,,`,,`,`,,`---
Copyright The Institute of Electrical and Electronics Engineers, Inc.
Provided by IHS under license with IEEE
No reproduction or networking permitted without license from IHS Not for Resale

2) Loads that cannot withstand frequency or voltage fluctuations beyond preset limits
3) Loads that cannot withstand harmonic distortions beyond preset tolerance limits

Once the loads have been categorized an appropriate UPS system can be selected to meet the requirements.

5.4.2 Selection

To determine the appropriate UPS system to feed critical loads, the following factors should be considered:

5.4.2.1 Sizing

The loads will usually dictate the size of the UPS system (usually rated in kilovoltampere at a given power factor). An important factor to consider in sizing the UPS system is the inrush current imposed on it. Since the UPS has very little overload capability, it is usually not practical or economical to size the UPS so that the unit is capable of furnishing inrush or short-circuit current requirements. The use of a transfer switch can compensate for the lack of this capability by providing a transfer of the transient load to the bypass source of power. Where no transfer capability exists, consideration should be given to selective loading of high inrush loads onto the UPS system. Consideration should also be given to the selection of fault-clearing devices to compensate for the lack of capability of supplying high short-circuit current.

The following load data shall be used in the sizing of a UPS system:

1) Total steady-state load
2) Load power factor
3) Continuous or short-duration load
4) Inrush current requirements of load

5.4.2.2 Single - or Three-Phase UPS

Uninterruptible power supply systems are available in single-phase- or three-phase-output configurations. The load requirements will dictate the type of UPS system used to service a particular load. With a three-phase system, consideration should be given to phase load balancing and load power factors to minimize the imbalance in the output voltage.

5.4.2.3 Load Linearity

Because the harmonic content of nonlinear load current may cause distortion of the inverter output voltage wave shape, the application of such loads to a UPS must be considered in its selection.

Also, the high peak current of many nonlinear loads may impact the inverter size and its current-limiting function so as to reduce the actual or apparent overload capacity.

5.4.3 Configuration

Typical configurations of uninterruptible power supply systems that are applicable to power generating station loads are as follows:

5.4.3.1 Single UPS Unit with Rectifier/ Charger, Inverter, and Battery

A single UPS is the simplest of configurations; it consists of a rectifier/charger, inverter, and battery. In the configurations shown these units are a dedicated system.

The configuration as shown in Fig 1 is capable of providing continuity of load power as long as the UPS continues to operate within its specification. The ac output voltage supplied to the load is not disturbed by an ac input failure.

Copyright © 1986 IEEE All Rights Reserved

Copyright The Institute of Electrical and Electronics Engineers, Inc.
Provided by IHS under license with IEEE
No reproduction or networking permitted without license from IHS Not for Resale

The inverter is characterized by its ability to supply the power to the load and can take its power from either the ac input by way of the rectifier/charger or from the battery.

When the ac input fails, the battery will provide energy to the inverter to maintain continuity of load power. The capacity of the battery determines the length of time the system can operate without an ac input supply.

The primary advantages of this configuration are its simplicity and minimum cost when compared to other systems.

The main disadvantage is that a failure of the inverter results in a loss of supply to the critical loads.

5.4.3.2 Single UPS Unit with Separate Battery Charger

In place of a rectifier/charger, a separate rectifier and battery charger may be used (see Fig 2). In this case, the rectifier is used to provide load power to the inverter.

The battery charger is controlled to recharge and maintain the battery in a charged condition. A blocking diode is used between the battery and the dc link to prevent the rectifier from charging the battery.

This arrangement is suitable for application where an existing charger and battery are required for power generating station loads and permits the removal of the UPS system from service without disturbing the dc load. The main disadvantage is that a failure of the inverter results in a loss of a supply to the critical loads.

5.4.3.3 Single UPS Unit with Alternate Source and Static Transfer Switch

When the continuity of load power is. critical, the addition of an alternate source and static transfer switch should be used as shown in Fig 3.

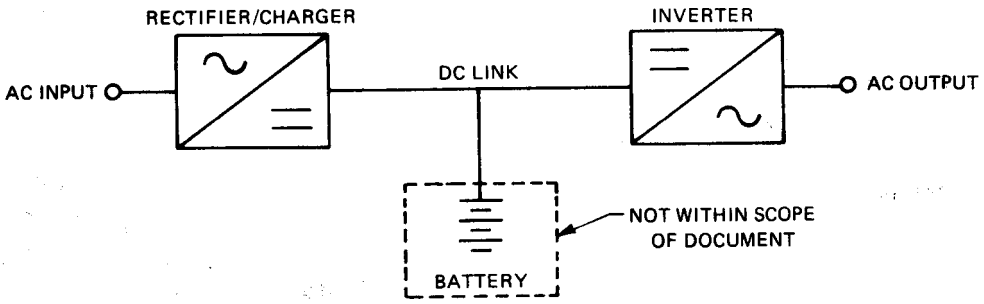

Figure 1—Single UPS Unit with Rectifier/Charger, Inverter, and Battery

Copyright © 1986 IEEE All Rights Reserved

Copyright The Institute of Electrical and Electronics Engineers, Inc.
Provided by IHS under license with IEEE
No reproduction or networking permitted without license from IHS
Not for Resale

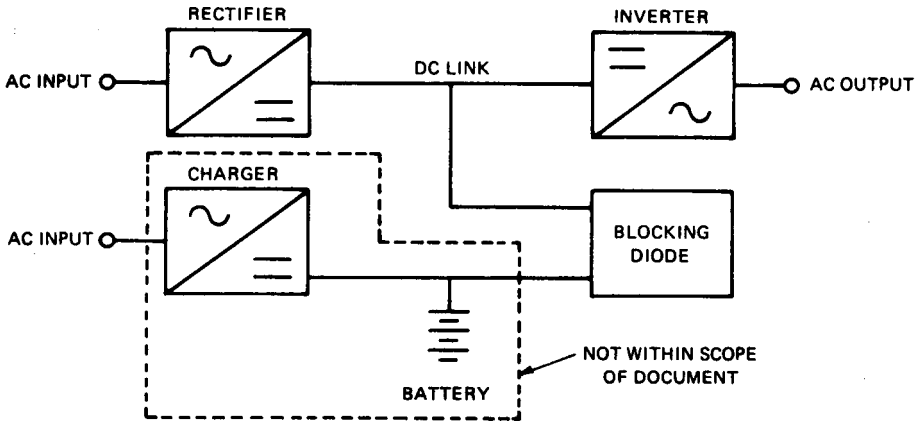

Figure 2—Single UPS Unit with Separate Battery Charger

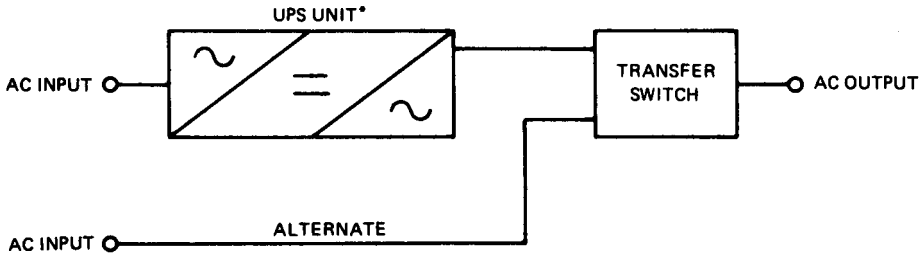

*AS SHOWN IN FIGS 1 AND 2

Figure 3—Single UPS Unit with Alternate Source and Static Transfer Switch

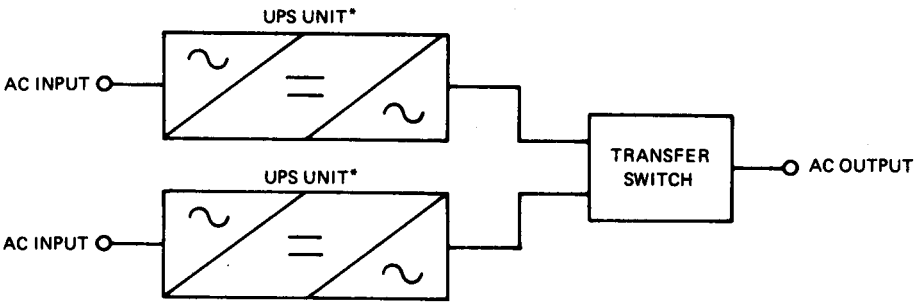

*AS SHOWN IN FIGS 1 AND 2

Figure 4—Standby Redundant UPS Units

Copyright © 1986 IEEE All Rights Reserved

Copyright The Institute of Electrical and Electronics Engineers, Inc.
Provided by IHS under license with IEEE
No reproduction or networking permitted without license from IHS
Not for Resale

This configuration can operate in two modes:

5.4.3.3.1 Continuous Operation

In the continuous operation mode, the load is connected to the UPS unit through the transfer switch. In case of UPS unit failure, or load current transients, such as inrush or fault current, the load is automatically transferred to the alternate source by the transfer switch.

5.4.3.3.2 Standby Operation

In standby operation, the load is supplied by the ac input through the alternate source and transfer switch.

5.4.3.4 Standby Redundant UPS Units

The standby redundant UPS configuration is characterized by its ability to operate as a single UPS, and the provisions of single UPS will apply. The system configuration is equivalent to a single UPS configuration.

Upon failure of the operating UPS unit, the load is transferred to the standby UPS unit by the transfer switch. This configuration is shown in Fig 4.

5.4.3.5 UPS with Bypass/Maintenance Source and Transfer Switch

This configuration is used for periodic maintenance and testing of the UPS system. The transfer switch which may be of the manual type connects the ac load to the ac supply while bypassing the UPS system. This switch should be selected on the basis of whether the load can be interrupted even for a short duration. If the load cannot be interrupted the switch should be make-before-break-type and the UPS may be taken out of service for inspection and testing without affecting the loads.

5.5 Bypass Transformers and Voltage Regulators

Although excluded from the scope of this recommended practice the alternate or bypass input voltage usually requires some form of filtering and regulation. This is usually achieved by the use of voltage-regulating transformers.

NOTE — The overcurrent capability of filtering and regulating equipment should be coordinated with fault-isolating devices, inrush current, and voltage requirements.

5.6 Special Considerations

5.6.1 System Reaction

The overall system may react to various characteristics of the load as seen by the inverter. For example, a rectifier dc power supply supplied by the UPS may affect wave shape, and this could have an effect on other components in the system such as a fault-detecting device.

The control circuit in the inverter regulates the output current and voltage under all operating conditions and provides overload and short-circuit protection for the inverter. It is recommended that loads be divided into many branch circuits, each protected with high-speed protective devices to minimize fault clearing times and thus minimize system disturbances.

5.6.2 Availability

The total time the UPS is available for duty should be evaluated at the ac output bus. This time is influenced by a variety of factors, such as the manufacturer's stated mean time between failures (MTBF) and mean time to repair (MTTR),

Copyright © 1986 IEEE All Rights Reserved

Copyright The Institute of Electrical and Electronics Engineers, Inc.
Provided by IHS under license with IEEE
No reproduction or networking permitted without license from IHS Not for Resale

configuration of the inverter elements (for example, use of redundant elements and bypass switching capability), and routine maintenance schedules. The basic inverter can be expected to have MTBF of approximately 20 000 h and a MTTR of approximately 1 h with proper tools and parts in hand. In determining total availability time of the UPS, the station ac power at the rectifier input can be considered as being available 99.9% of the time.

5.7 Source Requirements

The following examples describe the usual characteristics and limitations for the power sources of UPS systems. Deviations from these usual characteristics or limitations shall be clearly specified by the user to the manufacturer.

5.7.1 AC Source

The usual characteristics and limitations on the ac input are as follows:

1) The usual source is 480/277 V or 208/ 120 V, three-phase, or 120 V single-phase, 60 Hz. Steady-state voltage shall be within the service limits according to ANSI C84.1-1982 [1], Voltage Range B. Steady-state frequency variations shall be ±0.5%.
2) The source may be solidly grounded, resistance grounded, or ungrounded. The user shall specify the grounding configuration to the manufacturer.
3) The total harmonic distortion of the source voltage shall not exceed 10%. Harmonic components shall not exceed values given in Fig 5.
4) Overvoltage transients may be both slow (surges) or fast (impulses). Slow overvoltage transients shall not exceed 120% of the nominal source voltage and shall not last for more than 30 s. Fast overvoltage transients shall not exceed 6 kV and shall be represented by a 1.2/50 μs voltage waveform.
5) Overcurrent transients shall not exceed 3 kA and shall be represented by 8/20 μs current waveform.
6) Undervoltage transients may be of any magnitude down to and including complete loss of voltage, may be reoccurring, and of any duration.
7) Available short-circuit current shall be limited to 22 000 A at 480/277 V and 10 000 A at 208/120 V. Short-circuit current may be limited either by the impedance of the source system or by current-limiting fuses.
8) Frequency transients may be experienced up to ± 5% (for example, load switching).

Copyright © 1986 IEEE All Rights Reserved

Copyright The Institute of Electrical and Electronics Engineers, Inc.
Provided by IHS under license with IEEE
No reproduction or networking permitted without license from IHS Not for Resale

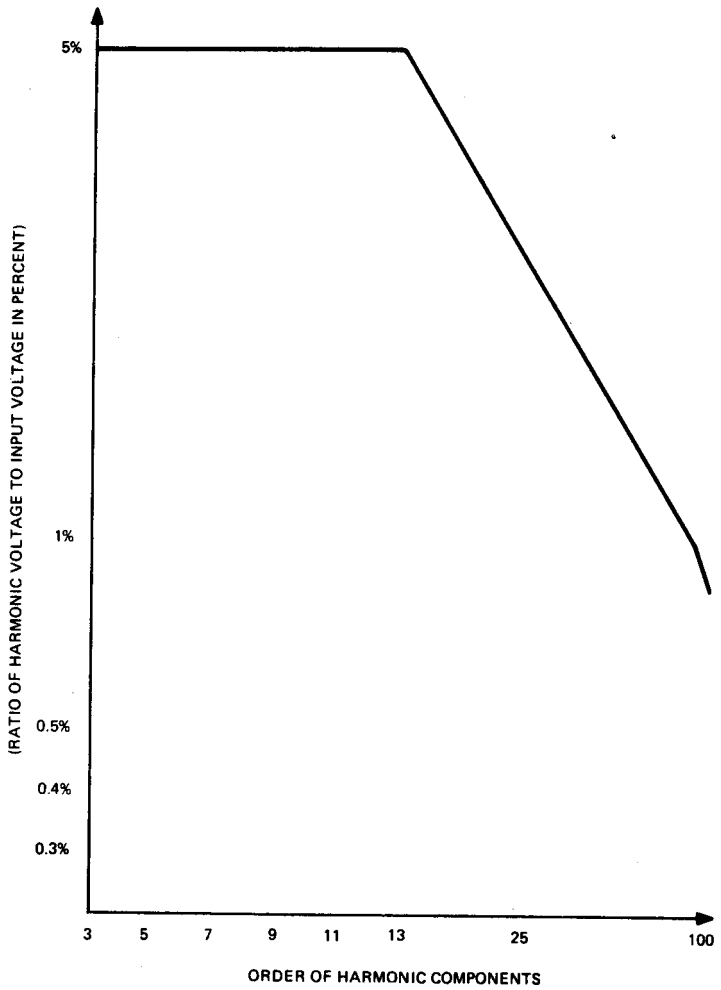

Figure 5—Maximum Permitted Harmonic Components of the AC Source

5.7.2 DC Sources

The usual characteristics and limitations on the dc input for inverters are as follows (there may be occasions where voltages other than those shown may be utilized):

1) UPS units specified for application in a nominal 125 V dc system shall operate over a dc-battery voltage range of 105 V – 140 V. UPS units specified for application in a nominal 250 V dc system shall operate over a dc-battery voltage range of 210 V – 280 V. Consideration should be given to address the voltage drop from the battery terminals to the UPS system.
2) The dc source is usually ungrounded with provisions for ground detection.
3) For UPS units in which the dc source is not dedicated to the inverter(s) the magnitude of the ac ripple voltage shall not exceed 2% of the nominal dc-source voltage.
4) Fast overvoltage transients (impulses) shall not exceed 4 000 V with a duration of up to 10 μs with a dynamic source impedance of no less than 40 Ω.
5) Undervoltage transients shall be such that the dc-source voltage is reduced to no less than 75% of nominal voltage and the duration shall not exceed 1 s.
6) Available short-circuit current shall be limited to 20 000 A.

Copyright © 1986 IEEE All Rights Reserved

--`,,`-`-`,,`,,`,`,,`---
Copyright The Institute of Electrical and Electronics Engineers, Inc.
Provided by IHS under license with IEEE
No reproduction or networking permitted without license from IHS
Not for Resale

7) If the UPS system is required to operate without the battery, then the charger and UPS characteristics need to be coordinated.

5.8 Output Requirements

The UPS should meet the output requirements for any load from 0% to 100% of the UPS rating without loss of operational life or other harmful effects upon the UPS or any of its components.

5.8.1 Capacity

The UPS real-power and reactive-power rating should respectively equal or exceed 125% of the total real-power and 125% of the total reactive-power requirements for all normal steady-state load configurations. The 25% margin should be included in the UPS capacity to account for the margin in calculating the maximum load.

It should be recognized that the largest real-power requirements might occur for a load configuration that is different from that which results in the largest reactive-power requirements. Where the load power factor is unknown, a power factor of 0.8 lagging should be used.

The UPS shall be designed to supply 100% of rated kilovoltampere over the entire ac and dc input-voltage ranges described in 5.7 and for any load-current waveforms with a crest factor not greater than 2.0.

5.8.2 Voltage

For all normal steady-state load conditions, together with the full range of ac and dc inputs described in 5.7, the UPS output voltage shall remain within ±2% of the rated output voltage for all possible combinations of loads.

For three-phase UPS units with balanced loads, the voltage imbalance shall be less than ±2%. For 100% load imbalance, the voltage imbalance shall not exceed ±5%.

5.8.3 Frequency

The output frequency of the UPS shall be 60 Hz ±0.5% for all normal ac and dc input voltages and frequencies. The rate of change of frequency (slew rate) when synchronizing to an alternate or bypass source, shall be no greater than 1 Hz/s.

5.8.4 Grounding

The enclosure and neutral of the UPS system shall be grounded.

5.8.5 Output Voltage Waveform

The output voltage of the UPS shall be a sinusoidal wave with no single harmonic component more than 3% rms, and a total harmonic distortion of no more than 5% of the magnitude of the fundamental frequency component. The output voltage shall have a waveform with a single crossing of the symmetrical axis between the wave peaks of opposite polarities (that is, there shall be no ringing at the zero crossing). If the expected load current is nonlinear then the acceptable voltage waveform harmonic distortion, the crest-factor range, and the load-current waveform distortion shall be determined and included in the specifications.

5.8.6 Transients

Upon step application or removal of load in any increment from no load to full load at 0.8 lagging to unity power factor with total load not exceeding 100% of UPS power rating, the output voltage shall remain within the range of the voltage tolerance profile shown in Fig 6.

Copyright © 1986 IEEE All Rights Reserved

Copyright The Institute of Electrical and Electronics Engineers, Inc.
Provided by IHS under license with IEEE
No reproduction or networking permitted without license from IHS Not for Resale

5.8.7 Short Circuits

When the circuit is short-circuited under ac and dc input conditions, as described in 5.7, the inverter should have a minimum operating capacity of 150% of rated current for I0 s to facilitate actuation of the ac distribution-panel devices. Under battery-discharge conditions, the short-circuit capability of the inverter may be reduced.

5.8.8 Operating and Interrupting Time

The UPS shall be rated for continuous operation. If used, the static switch shall transfer a load from the inverter to the ac source upon inverter faults and overload conditions, with an interruption time of no more than 4.17 ms.

The characteristics of the alternate source should be considered in evaluating the total transient time.

5.8.9 Overload Rating

The inverter shall be capable of operating at 125% of current rating for 1 h with output-voltage regulation of ±5% at nominal dc and ac input voltage.

5.8.10 Synchronizing

The inverter in systems with an alternate or bypass maintenance source shall operate in synchronism with the source if the alternate source is within +0.5% frequency bandwidth.

5.8.11 Audible Noise

The sound level of the audible noise emitted by the UPS shall be acceptable for the application. Service, maintenance, and operations, which are conducted in the UPS units installation area, and regulatory requirements shall be considered in determining the acceptable UPS unit sound level.

5.8.12 Radiated and Conducted Electromagnetic Emission

The effect of UPS radiated and conducted electromagnetic emission on sensitive electronic equipment installed in close proximity or electrically connected to the UPS shall be considered.

Copyright © 1986 IEEE All Rights Reserved

Copyright The Institute of Electrical and Electronics Engineers, Inc.
Provided by IHS under license with IEEE
No reproduction or networking permitted without license from IHS Not for Resale

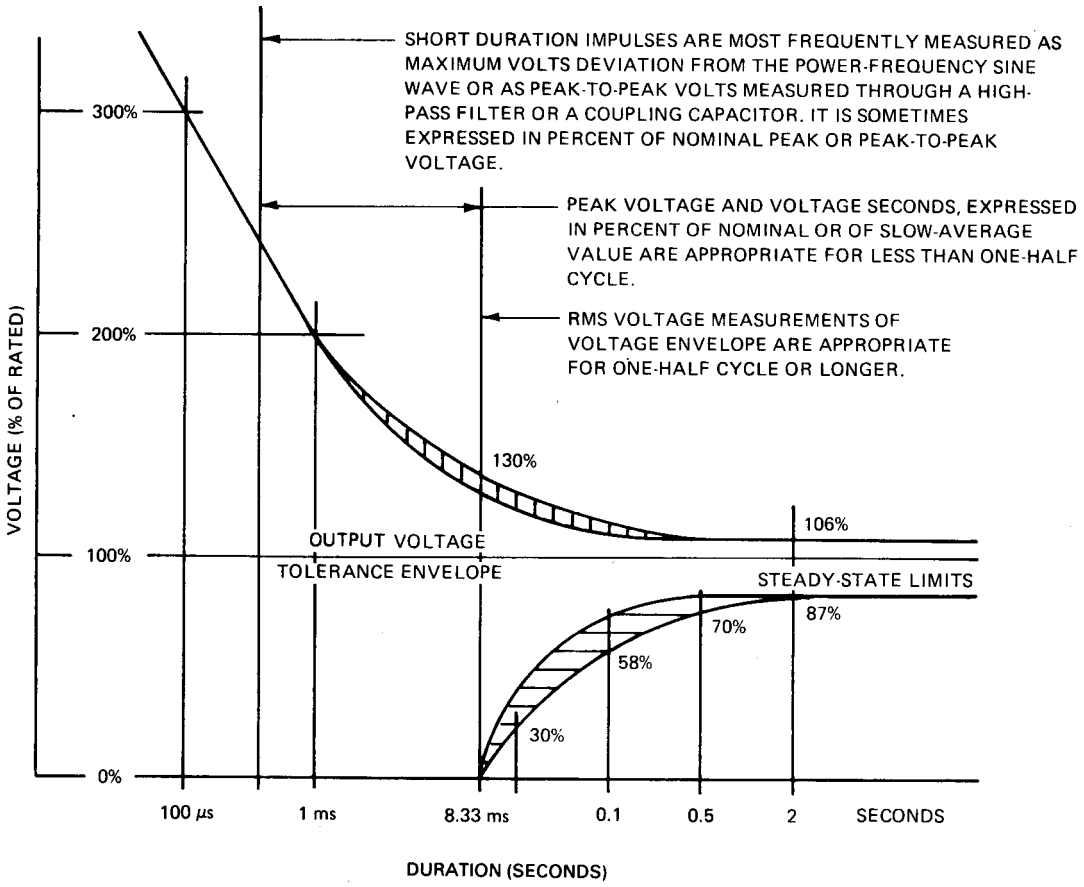

Figure 6—Voltage Tolerance Profile

5.9 Controls, Instruments, and Alarms

5.9.1 Controls

The basic UPS system as depicted in Fig 1 shall contain as a minimum the following control devices:

1) AC input disconnecting device
2) DC input disconnecting device
3) UPS output disconnecting device

For UPS systems utilizing a static transfer switch, the UPS system shall include a control device to manually initiate forward and reverse transfer of the static switch. Control logic for automatic operation of the transfer switch shall be defined for individual applications.

5.9.2 Instruments

Meters having a full-scale accuracy of ±2% shall be provided to display the following parameters:

1) Inverter input dc voltage
2) AC alternate (bypass) source voltage

Copyright © 1986 IEEE All Rights Reserved

Copyright The Institute of Electrical and Electronics Engineers, Inc.
Provided by IHS under license with IEEE
No reproduction or networking permitted without license from IHS
Not for Resale

3) Rectifier output dc current
4) UPS output ac voltage
5) UPS output ac
6) Inverter output frequency

5.9.3 Alarms

Alarms should be provided to indicate the following UPS system malfunctions:

1) *Loss of Synchronization*. Inverter not synchronized to alternate ac source or alternate ac source not available.
2) *Low-Inverter Voltage.* Inverter ac output voltage is less than 90% of nominal (adjustable).
3) *Protective Device Actuation*. Indication of protective device operation in the UPS system.
4) *DC Bus Undervoltage.* Inverter dc input voltage is less than specified minimum.
5) *Overload.* UPS load current is greater than 100% of rated UPS current.
6) *Reverse Transfer.* Load is supplied by the alternate ac source.
7) *Cooling Trouble.* Indication of loss of air-flow through cooling fan.
8) *Alternate AC Source Trouble.* Alternate ac source is outside specified range.
9) *DC Operation*. Alarms when battery current flows to the inverter.

5.9.4 Indicating Devices

Indicators should be provided to indicate the following status conditions:

1) AC input disconnect device position
2) DC input disconnect device position
3) Static transfer switch position
4) Output disconnect device position

6. Procurement Document Requirements

Features to be specified in the procurement documents for the UPS system equipment include the following system requirements:

6.1 System Requirements

The following system requirements shall be specified:

6.1.1 System Nominal Rating

6.1.2 System Overload Rating

6.1.3 System Input Short-Circuit Current

1) Normal ac source
2) Alternate ac source
3) DC source

6.1.4 Grouding Requirements

1) System
2) Enclosure

Copyright © 1986 IEEE All Rights Reserved

Copyright The Institute of Electrical and Electronics Engineers, Inc.
Provided by IHS under license with IEEE
No reproduction or networking permitted without license from IHS Not for Resale

6.1.5 Qualification Requirements (if applicable)

6.1.6 Testing requirements

6.1.7 Environmental Data

6.1.8 Information Requirements

1) Technical Data
2) Drawings
3) Qualification data (if applicable)
4) Replacement part list and maintenance schedule

6.1.9 Cooling Requirements and Equipment Heat Rejection Requirements

6.1.10 Restrictions on Cooling Methods

6.1.11 Lifting and Handling

6.1.12 Packaging and Storage

6.1.13 Preferred and Restricted Material

6.1.14 Source Input Voltage—Nominal and Range

1) Primary ac source
2) Alternate ac source
3) DC source

6.1.15 Source Voltage Transient and Harmonic Characteristics

6.1.16 Source Input Frequency—Nominal and Range

1) Primary ac source
2) Alternate ac source

6.1.17 Output Voltage—Nominal and Range

Harmonic Content

6.1.18 Output Frequency—Nominal and Range

6.1.19 Load Current—Crest Factor

6.1.20 Load Power-Factor Range

6.1.21 Line-Synchronizing Range

6.1.22 Slew Rate

6.1.23 Response and Recovery Features

1) Step load changes
2) AC source transient

Copyright © 1986 IEEE All Rights Reserved

--`,,`-`-`,,`,,`,`,,`---

Copyright The Institute of Electrical and Electronics Engineers, Inc.
Provided by IHS under license with IEEE
No reproduction or networking permitted without license from IHS Not for Resale

3) DC source transient
4) In addition to the system requirements listed in 6.1.1 through Auto the following system requirements should be specified:

6.1.24 Minimum Power Factor

6.1.25 Source Current Harmonic Content

6.1.26 Efficiency—Full and Partial Load

6.1.27 Maintainability

6.1.28 Reliability

6.1.29 Acoustic Noise Limits

6.1.30 Type of Downstream Interrupting Devices

6.1.31 Enclosure

1) Type
2) Security requirements
3) Painting and coating requirements

6.2 Component Requirements

The following component features should be specified:

6.2.1 Rectifier/Charger

1) Output voltage—nominal and range *regulation*
2) Current and overload rating
3) Protective features
   a) Input circuit breaker
   b) Surge suppression
   c) Output overvoltage
   d) Output current limits

6.2.2 Inverter

1) Kilovoltampere and overload ratings
2) Input voltage—nominal and range
3) Protective features
   a) Input overcurrent protection
   b) Output overcurrent protection
   c) Undervoltage
   d) Overvoltage
4) Output current limit
5) Load-current crest factor

6.2.3 Blocking Diode

1) Continuous dc

Copyright © 1986 IEEE All Rights Reserved

Copyright The Institute of Electrical and Electronics Engineers, Inc.
Provided by IHS under license with IEEE
No reproduction or networking permitted without license from IHS Not for Resale

2) Transient-current withstand capability
3) Peak inverse voltage

6.2.4 Static Transfer Switch

1) Maximum allowable interruption time
2) Transfer and retransfer conditions
3) Number of poles
4) Continuous and overcurrent ratings

6.2.5 Manual Bypass/Maintenance Switch

The following features shall be specified:

1) Make-before-break requirements
2) Number of poles
3) Continuous and overcurrent ratings
4) Contact rating (resistive and reactive)

7. Testing Requirements

7.1 General

This section includes general requirements for the design and routine tests of an interruptible power-supply system. Procurement documents shall include testing requirements as applicable to specific configurations and systems.

This complete UPS shall be design tested and routine tested in the factory. Supplemental tests with actual batteries and load may be required to be performed at the site. For nuclear safety-related applications the equipment qualification should be performed in accordance with ANSI/IEEE 650-1979 [4].

7.2 Functional Unit Tests

Functional unit tests may be specified in addition to the UPS tests.

7.2.1 Rectifier/Charger Tests

Rectifier/ charger tests shall be performed according to NEMA PE5-1983 [7]. Routine tests shall cover dielectric test, light-load test, and a checking of auxiliary protection devices and control systems.

7.2.2 Inverter Tests

In addition to the manufacturer's design and routine tests the optional tests shown in Table 1 shall apply.

Copyright © 1986 IEEE All Rights Reserved

Copyright The Institute of Electrical and Electronics Engineers, Inc.
Provided by IHS under license with IEEE
No reproduction or networking permitted without license from IHS Not for Resale

Table 1—Inverter Optional Tests

	Design Test	Routine Test
Short time current	X	
Short-circuit capability	X	
Restart	X	
Output voltage imbalance		X

7.2.3 Transfer-Switch Tests

7.2.3.1

Tests of UPS transfer switches shall be performed in accordance with IEC Publication 146-1973 [5] and IEC Publication 146-2-1974 [6], where applicable.

The following routine tests shall be performed:

1) Dielectric/insulation—IEC Publication 146-1973 [5], Subclause 492.1
2) Auxiliary devices check—IEC Publication 146-2-1974 [6], Subclause 5.4
3) Protective devices check—IEC Publication 146-1973 [5], Subclause 492.9
4) Supervisor and remote signal circuits check
5) Light-load transfer test

7.2.3.2

Design testing of UPS transfer switches shall require a functional test with a complete UPS. In addition to the tests listed in 7.2.3.1 a design test program shall include:

1) Complete functional test, for example, switching of loads
2) Transfer time test
3) Load test, temperature rise—IEC Publication 146-2-1974 [6], Subclause 5.5
4) Short-time overload—IEC Publication 146-2-1974 [6], Subclause 5.9
5) Short-circuit capability—IEC Publication 146-2-1974 [6], Subclause 5.10

7.2.4 Monitor and Control Equipment

Routine tests shall include the following tests:

1) Dielectric/insulation
2) Electric circuit check
3) Operation control check

Design tests shall not be required for monitor and control equipment.

7.3 UPS Tests

The complete UPS testing in accordance with Table 2 shall be performed at the factory after assembly and interconnection of the functional units. These tests shall be followed by supplemental tests at the site.

Copyright © 1986 IEEE All Rights Reserved

Copyright The Institute of Electrical and Electronics Engineers, Inc.
Provided by IHS under license with IEEE
No reproduction or networking permitted without license from IHS Not for Resale

Table 2—UPS Tests

Test	Design Test	Routine Test
Light load	X	X
Synchronization	X	X
AC input failure	X	X
AC input return	X	X
Transfer—forward and reverse	X	X
Rated full load	X	X
UPS efficiency	X	
Output-voltage balance (three-phase)	X	
Overload capability	X	
Short-circuit capability	X	
Harmonic components	X	X
Audible noise	X	
Heat load	X	

7.4 Test Specificatons

Tests described in 7.4.1 through 7.4.13, when conducted at the site, shall use the maximum available load, which does not exceed the rated continuous load, under the following conditions:

1) With and without bypass, where appropriate
2) With and without redundance, where appropriate

7.4.1 Light-Load Test

This test shall be performed to verify that the UPS is correctly connected and all functions operate properly. The following tests shall be performed:

1) Output voltage and frequency
2) The operation of all control switches, measuring devices, meters, and other means required to determine proper UPS operation.

7.4.2 Synchronization Test

This test shall be required for UPS systems when synchronization with an alternate source is required. Variation-frequency limits shall be tested by use of a variable-frequency generator. The rate of change of frequency during synchronization and the UPS output voltage shall be measured.

7.4.3 AC Input Failure Test

The test shall be performed by interrupting the ac input power or shall be simulated by switching off all UPS rectifiers and bypass feeders at the same time. Output-voltage variations shall be checked for specified limits. Variation frequency shall be observed.

Copyright © 1986 IEEE All Rights Reserved

Copyright The Institute of Electrical and Electronics Engineers, Inc.
Provided by IHS under license with IEEE
No reproduction or networking permitted without license from IHS Not for Resale

This test shall be performed with dc source available.

7.4.4 AC Input Return Test

This test shall be performed either by restoring the ac input power or simulated by switching on all UPS rectifiers and bypass feeders at the same time.

Proper operation of the UPS rectifier shall be observed. AC output voltage and frequency shall also be recorded.

7.4.5 Transfer Test—Forward and Reverse

This test shall be required for UPS systems that have a static bypass switch. Transients, such as maximum and minimum voltages, and transfer times shall be measured during load transfer to and from the bypass source.

7.4.6 Rated Full-Load Test

Load tests shall be performed by connecting loads to the UPS output, equivalent to the full-rated load at the extremes of ac and dc in put-voltage range.

7.4.7 UPS Efficiency Test

UPS efficiency at rated capacity shall be determined by the measurement of the real-power input and real-power output of the UPS system or shall be derived from the results of individual UPS unit tests.

7.4.8 Output-Voltage Balance Test

For three-phase systems the UPS phase-to-phase and phase-to-neutral output voltages shall be recorded during the following tests:

1) Symmetrical load conditions
2) Imbalanced load conditions from no load to full load

Phase angle deviations shall be recorded, or derived by calculation from the values of phase-to-phase and phase-to-neutral voltages.

7.4.9 Overload Capability Test

The values of overload(s) sequences shall be applied for the time interval(s) specified. Values of voltage and current shall be observed.

7.4.10 Short-Circuit Capability Test

A short circuit shall be applied to the UPS output and the following information shall be recorded for a UPS with and without bypass:

1) The operation of protective devices or circuits
2) The short-circuit current as function of time

Appropriate circuit protective devices (fuses, circuit breakers) shall be permitted to be applied when making these tests.

Copyright © 1986 IEEE All Rights Reserved

Copyright The Institute of Electrical and Electronics Engineers, Inc.
Provided by IHS under license with IEEE
No reproduction or networking permitted without license from IHS Not for Resale

7.4.11 Harmonic-Components Test

Harmonic components of output voltage shall be recorded under rated linear (sine wave) and nonlinear load conditions.

7.4.12 Audible Noise Test

For test procedure and limits, the manufacturer should be consulted. Audible noise of a complete UPS may differ considerably from the values of individual functional units. Room conditions—resonance and reflection—will cause differences from calculated or measured values.

7.4.13 Heat-Load Test

The UPS shall be operated in those modes that would result in the greatest heat generation to verify acceptable component operating temperatures.

Copyright © 1986 IEEE All Rights Reserved

Copyright The Institute of Electrical and Electronics Engineers, Inc.
Provided by IHS under license with IEEE
No reproduction or networking permitted without license from IHS
Not for Resale