IEEE Std 844™-2000
(Revision of
IEEE 844-1991)

Errata to IEEE Recommended Practice for Electrical Impedance, Induction, and Skin Effect Heating of Pipelines and Vessels

Sponsor

IEEE Industrial Applications Society
of the
Petroleum and Chemical Industrial Committee

Correction Sheet
Issued 15 August 2005

Copyright © 2005 by the Institute of Electrical and Electronics Engineers, Inc. All rights reserved. Published 2005. Printed in the United States of America.

This correction sheet may be freely reproduced and distributed in order to maintain the utility and currency of the underlying Standard. This correction sheet may not be sold, licensed or otherwise distributed for any commercial purposes whatsoever. The content of this correction sheet may not be modified.

Copyright The Institute of Electrical and Electronics Engineers, Inc.
Provided by IHS under license with IEEE
No reproduction or networking permitted without license from IHS
Not for Resale

Page 10, 4.4.1.5, equation (2) should be:

$$T = (D - d)/2 \qquad (2)$$

Page 13, 4.4.2.2.1 Dielectric spark test, the first sentence should read as follows:

During the manufacturing each unit length of cable shall withstand, without failure, a spark test in accordance with Table 2 below and Clause 900 of UL 1581-1997.

Page 13, the title of Table 2 should read as follows:

Table 2—Dielectric spark test

Page 25, 7.3.2 Induction heating systems, the last sentence in the paragraph should read as follows:

Table 6 lists the limitations and advantages of induction heating.

Page 25, 7.3.3 Skin-effect heating systems, the last sentence in the paragraph should read as follows:

Table 6 lists the limitations and advantages of skin-effect heating.

Copyright The Institute of Electrical and Electronics Engineers, Inc.
Provided by IHS under license with IEEE
No reproduction or networking permitted without license from IHS Not for Resale

IEEE Std 844-2000
(Revision of
IEEE Std 844-1991)

IEEE Recommended Practice for Electrical Impedance, Induction, and Skin Effect Heating of Pipelines and Vessels

Sponsor

IEEE Industry Applications Society
of the
Petroleum and Chemical Industry Committee

Approved 21 June 2000

IEEE-SA Standards Board

Abstract: Recommended practices are provided for the design, installation, testing, operation, and maintenance of impedance, induction, and skin-effect heating systems. Thermal insulation and control and monitoring are addressed. General considerations for heating systems are discussed, covering selection criteria, design guidelines and considerations, power systems, receiving and storage, installation, testing, operations, and maintenance. These aspects are then discussed for each of the above types of systems, along with special considerations particular to each. These recommended practices are intended to apply to the use of these heating systems in general industry.
Keywords: heating systems, impedance heating, induction heating, process heating, skin-effect heating, thermal insulation

---

The Institute of Electrical and Electronics Engineers, Inc.
3 Park Avenue, New York, NY 10016-5997, USA

Copyright © 2000 by the Institute of Electrical and Electronics Engineers, Inc.
All rights reserved. Published 16 October 2000. Printed in the United States of America.

Print: ISBN 0-7381-2500-8 SH94859
PDF: ISBN 0-7381-2501-6 SS94859

No part of this publication may be reproduced in any form, in an electronic retrieval system or otherwise, without the prior written permission of the publisher.

Copyright The Institute of Electrical and Electronics Engineers, Inc.
Provided by IHS under license with IEEE
No reproduction or networking permitted without license from IHS
Not for Resale

IEEE Standards documents are developed within the IEEE Societies and the Standards Coordinating Committees of the IEEE Standards Association (IEEE-SA) Standards Board. Members of the committees serve voluntarily and without compensation. They are not necessarily members of the Institute. The standards developed within IEEE represent a consensus of the broad expertise on the subject within the Institute as well as those activities outside of IEEE that have expressed an interest in participating in the development of the standard.

Use of an IEEE Standard is wholly voluntary. The existence of an IEEE Standard does not imply that there are no other ways to produce, test, measure, purchase, market, or provide other goods and services related to the scope of the IEEE Standard. Furthermore, the viewpoint expressed at the time a standard is approved and issued is subject to change brought about through developments in the state of the art and comments received from users of the standard. Every IEEE Standard is subjected to review at least every five years for revision or reaffirmation. When a document is more than five years old and has not been reaffirmed, it is reasonable to conclude that its contents, although still of some value, do not wholly reflect the present state of the art. Users are cautioned to check to determine that they have the latest edition of any IEEE Standard.

Comments for revision of IEEE Standards are welcome from any interested party, regardless of membership affiliation with IEEE. Suggestions for changes in documents should be in the form of a proposed change of text, together with appropriate supporting comments.

Interpretations: Occasionally questions may arise regarding the meaning of portions of standards as they relate to specific applications. When the need for interpretations is brought to the attention of IEEE, the Institute will initiate action to prepare appropriate responses. Since IEEE Standards represent a consensus of all concerned interests, it is important to ensure that any interpretation has also received the concurrence of a balance of interests. For this reason, IEEE and the members of its societies and Standards Coordinating Committees are not able to provide an instant response to interpretation requests except in those cases where the matter has previously received formal consideration.

Comments on standards and requests for interpretations should be addressed to:

Secretary, IEEE-SA Standards Board
445 Hoes Lane
P.O. Box 1331
Piscataway, NJ 08855-1331
USA

Note: Attention is called to the possibility that implementation of this standard may require use of subject matter covered by patent rights. By publication of this standard, no position is taken with respect to the existence or validity of any patent rights in connection therewith. The IEEE shall not be responsible for identifying patents for which a license may be required by an IEEE standard or for conducting inquiries into the legal validity or scope of those patents that are brought to its attention.

IEEE is the sole entity that may authorize the use of certification marks, trademarks, or other designations to indicate compliance with the materials set forth herein.

Authorization to photocopy portions of any individual standard for internal or personal use is granted by the Institute of Electrical and Electronics Engineers, Inc., provided that the appropriate fee is paid to Copyright Clearance Center. To arrange for payment of licensing fee, please contact Copyright Clearance Center, Customer Service, 222 Rosewood Drive, Danvers, MA 01923 USA; (978) 750-8400. Permission to photocopy portions of any individual standard for educational classroom use can also be obtained through the Copyright Clearance Center.

Copyright The Institute of Electrical and Electronics Engineers, Inc.
Provided by IHS under license with IEEE
No reproduction or networking permitted without license from IHS
Not for Resale

Introduction

(This introduction is not a part of IEEE 844-2000, IEEE Recommended Practice for Electrical Impedance, Induction, and Skin Effect Heating of Pipelines and Vessels.)

The types of heating systems covered by this draft recommended practice have been used for a number of years in the petrochemical industry. They were recognized for the first time in the 1981 issue of the National Electrical Code® ANSI/NFPA 70-1990.

Electrical heating of pipelines and vessels in the petrochemical industry is a growing portion of total heating requirements because of its advantages in temperature control and the rise of energy costs. This recommended practice is a companion document and supplements IEEE Std 515-1997, IEEE Standard for the Testing, Design, Installation, and Maintenance of Electrical Resistance Heat Tracing for Industrial Applications. While this recommended practice may be used with IEEE Std 515-1997 to select the type of electrical heating to be used, it is a stand-alone document for the types of heating it covers.

Since electric heating systems are interrelated with electric power, control, and alarm systems, other standards, some of which are listed in Clause 2, should be referred to when using this recommended practice. The recommendations here are not intended to supersede any current standards or recommended practices, and sound engineering judgment should always be used when applying this or any other standard.

This recommended practice correlates petrochemical industry practices; it is not intended to be a design guide or an exhaustive procedure manual. It may be used to evaluate different heating systems and suppliers of those systems for suitability and performance. The appendixes are included for information only; they are not part of this recommended practice.

Participants

This recommended practice was prepared by the 844 Working Group of the Petroleum and Chemical Industry Committee of the Industry Applications Society. At the time this recommended practice was revised, the Electrical Impedance, Induction, and Skin Effect Heating of Pipelines and Vessels working group had the following members:

N. R. (Bob) Rafferty, *Co-Chair*
George B. Tarbutton, *Co-Chair*

Douglas Bailey	C. James Erickson	Donn Rosen
Roy Barth	Neal Fenster	Sukanta Sengupta
Henry Becker	Julio Lizcano	H. R. Stewart
Howard Bradfield	Andrew Lozinski	Robert C.Turner
Kurt Brengel	John Mortimer	Gary White
Franco Chakkalakal	David Parman	Wayne Williams

The following invited experts contributed to the technical details of this recommended practice:

Frank Heizer	Don Schollin	Keith Weber
Frank Rocchio	John Turner	Donald W. Zipse

Copyright © 2000 IEEE. All rights reserved.

Copyright The Institute of Electrical and Electronics Engineers, Inc.
Provided by IHS under license with IEEE
No reproduction or networking permitted without license from IHS
Not for Resale

The following members of the balloting committee voted on this standard:

Doug Bailey
Henry Becker
Howard Bradfield
Frederick Bried
David O. Brown
James M. Daly
Gary Donner
Marcus O. Durham
C. James Erickson
Neal Fenster
H. Landis Floyd
Richard H. Hulett
Ben C. Johnson
Andrew Lozinski
William E. McBride
Bill McCarty
Paul W. Myers
Lorraine K. Padden
David Parman
Tom P. Pearson
John E. Propst
N. Robert Rafferty
Larry J. Robicheaux
Frank H. Rocchio
Chet Sandberg
Tom Shaw
George B. Tarbutton
John Turner
Robert C. Turner
Wayne Williams
Donald W. Zipse

When the IEEE-SA Standards Board approved this standard on 21 June 2000, it had the following membership:

Donald N. Heirman, *Chair*
James T. Carlo, *Vice Chair*
Judith Gorman, *Secretary*

Satish K. Aggarwal
Mark D. Bowman
Gary R. Engmann
Harold E. Epstein
H. Landis Floyd
Jay Forster*
Howard M. Frazier
Ruben D. Garzon
James H. Gurney
Richard J. Holleman
Lowell G. Johnson
Robert J. Kennelly
Joseph L. Koepfinger*
Peter H. Lips
L. Bruce McClung
Daleep C. Mohla
James W. Moore
Robert F. Munzner
Ronald C. Petersen
Gerald H. Peterson
John B. Posey
Gary S. Robinson
Akio Tojo
Donald W. Zipse

*Member Emeritus

Also included is the following nonvoting IEEE-SA Standards Board liaison:

Alan Cookson, *NIST Representative*
Donald R. Volzka, *TAB Representative*

Jennifer McClain Longman
IEEE Standards Project Editor

National Electrical Code and NEC are both registered trademarks of the National Fire Protection Association, Inc.

Copyright © 2000 IEEE. All rights reserved.
Copyright The Institute of Electrical and Electronics Engineers, Inc.
Provided by IHS under license with IEEE
No reproduction or networking permitted without license from IHS
Not for Resale

Contents

1. Overview 1

1.1 Scope 1
1.2 Purpose 2
1.3 Product certification 2

2. References 2

3. Definitions 3

4. General product testing 6

4.1 General product type tests for impedance heating power cable 6
4.2 General product type tests for induction heating 6
4.3 General product type tests for susceptor heating furnaces within a vessel 7
4.4 Product testing for skin-effect heating systems 7

5. Thermal insulation 14

5.1 Selection of insulation material 15
5.2 Selection of weather barrier 15
5.3 Selection of insulation thickness 16
5.4 Special consideration of thermal insulation 17
5.5 Determination of energy losses 19
5.6 Special considerations of energy loss 19
5.7 Thermal insulation system maintenance 19

6. Control and monitoring 20

6.1 Control types 20
6.2 Zoning and sensor location 21
6.3 Types of sensors 22
6.4 Wiring considerations 23
6.5 Special control considerations 23
6.6 Control specifications 23

7. Heating system—General 24

7.1 Introduction 24
7.2 Categories 24
7.3 Selection criteria 25
7.4 Design guidelines and considerations 25
7.5 Power systems 27
7.6 Receiving and storage 28
7.7 Installation 28
7.8 Testing 28
7.9 Operations 29
7.10 Maintenance 29

8. Impedance heating 29

Copyright © 2000 IEEE. All rights reserved.

Copyright The Institute of Electrical and Electronics Engineers, Inc.
Provided by IHS under license with IEEE
No reproduction or networking permitted without license from IHS
Not for Resale

8.1 Introduction 29
8.2 Selection criteria 30
8.3 Design guidelines and considerations 30
8.4 Specification 34
8.5 Installation 35
8.6 Testing 36
8.7 Operations 37
8.8 Maintenance 37
8.9 Special considerations 37

9. Induction heating of pipelines and vessels 37

9.1 Introduction 37
9.2 Selection criteria 38
9.3 Design guidelines and considerations 38
9.4 Specification 43
9.5 Installation 44
9.6 Testing 45
9.7 Operation 45
9.8 Maintenance 45
9.9 Special considerations 46

10. Induction susceptor heating furnaces within a vessel 46

10.1 Furnace description 46
10.2 Sub systems 48
10.3 Safety 53
10.4 Installation 53
10.5 Maintenance 54

11. Skin-effect heating 54

11.1 Introduction 54
11.2 Selection criteria and applications 56
11.3 Design guidelines and considerations 55
11.4 Specification 57
11.5 Installation 57
11.6 Testing 57
11.7 Operation 58
11.8 Maintenance 58
11.9 Special considerations 58

Annex A (informative) Bibliography 59

Annex B (informative) Pipe heat-loss considerations 61

Annex C (informative) Vessel heat-loss considerations 67

Annex D (informative) Heat-Up considerations 72

Annex E (informative) Method to determine equivalent thicknesses of insulating cements 74

Annex F (informative) Induction heating 75

Annex G (informative) Induction susceptor heating furnaces within a vessel specifications .....
(To be developed by user and supplier) 77

Copyright © 2000 IEEE. All rights reserved.

Copyright The Institute of Electrical and Electronics Engineers, Inc.
Provided by IHS under license with IEEE
No reproduction or networking permitted without license from IHS
Not for Resale

IEEE Recommended Practice for Electrical Impedance, Induction, and Skin Effect Heating of Pipelines and Vessels

1. Overview

This recommended practice is divided into 11 clauses. Clause 1 provides the scope. Clause 2 lists references to other standards that are useful in applying this recommended practice. Clause 3 provides definitions that are either not found in other standards or have been modified for use with this recommended practice. Clause 4 establishes requirement for general product testing. Clause 5 provides information on thermal insulation systems that is useful in applying this recommended practice. Clause 6 provides information on the control and monitoring of heating systems covered in this recommended practice. Clause 7 provides general information for the selection, design, installation, and maintenance of heating systems covered by this recommended practice. Clause 8 provides specific information related to impedance heating. Clause 9 provides specific information related to induction heating of pipelines and vessels. Clause 10 provides specific information related to induction susceptor heating furnaces within a vessel. Clause 11 provides specific information related to skin-effect heating.

This recommended practice also contains Annexes. Annex A provides bibliographical references. Annex B provides heat-loss formulas and example calculations. Annex C provides vessel heat loss considerations. Annex D provides heat-up considerations. Annex E provides calculations for determining the thickness of thermal insulation cement. Annex F provides the theory of induction heating. Annex G provides a sample specification for a susceptor heating system.

1.1 Scope

This document provides recommended practices for the design, installation, testing, operation, and maintenance of the following types of electrical heating systems on pipes and vessels for use in general industry: impedance heating systems, induction heating systems, induction susceptor heating furnaces within a vessel, and skin-effect heating systems.

--`,,```,,,,````-`-`,,`,,`,`,,`---

Copyright © 2000 IEEE. All rights reserved.

Copyright The Institute of Electrical and Electronics Engineers, Inc.
Provided by IHS under license with IEEE
No reproduction or networking permitted without license from IHS
Not for Resale

1.1.1 Limits

These recommended practices, when used with other recognized codes and standards, are intended to cover each heating system in its entirety, including system design, specification, installation, operation, testing, and maintenance of the following:

a) Heating systems

b) Thermal insulation systems

c) Pipeline or vessel electrical isolation systems

d) Electric power supply systems

e) Electric grounding systems

f) Control and monitoring systems

1.2 Purpose

1.2.1 System design

Design information, selection parameters, and data in this document are not intended to provide a complete design of these heating systems. They should be helpful guides when the user is performing the following tasks:

a) Selecting the optimum heating system

b) Establishing design criteria and constraints for the heated pipeline or vessel to assure system compatibility

c) Preparing specifications for heating systems to obtain quotations on equivalent systems

d) Developing information on installation, operation, testing, and maintenance of these heating systems

1.2.2 User guidance

This document is intended to aid the user in specifying, installing, operating, testing, and maintaining heating systems that will

a) Maintain design temperature of contained material

b) Provide electrical, thermal, and mechanical durability and reliability

c) Minimize hazards to the user or the surroundings

1.3 Product certification

Users of this recommended practice are advised to consider the desirability of third party certification of products conforming with this standard, based on testing and continued surveillance, which may be coupled with assessment of a supplier's quality systems.

2. References

This recommended practice shall be used in conjunction with the following publications. When the following standards are superseded by an approved revision, the revision shall apply.

Copyright © 2000 IEEE. All rights reserved.
Copyright The Institute of Electrical and Electronics Engineers, Inc.
Provided by IHS under license with IEEE
No reproduction or networking permitted without license from IHS
Not for Resale

AEIC CS6-96, AIEC Specification for Ethylene Propylene Rubber Insulated Shielded Power Cables Rated 5 kV through 69 kV (6th edition).[1]

NFPA 70-1999, National Electrical Code®, (NEC®).[2]

ASTM D1868-93 (1998), Standard Test Method for Detection and Measurement of Partial Discharge (Corona) Pulses in Evaluation of Insulation Systems.[3]

IEEE Std 141-1993, IEEE Recommended Practice for Electric Power Distribution for Industrial Plants (Red Book).[4]

IEEE Std 400-1991, IEEE Guide for Making High-Direct-Voltage Tests on Power Cable Systems in the Field.

IEEE Std 1202-1991 (R1996), IEEE Standard for Flame Testing of Cables for use in Cable Tray in Industrial and Commercial Occupancies.

UL 1581-1997, Reference Standard for Wires, Cables, and Flexible Cords.[5]

3. Definitions

For the purposes of this recommended practice, the following terms and definitions apply.

3.1 ambient temperature: The environmental temperature surrounding the object under consideration. For objects enclosed in thermal insulation, it is the temperature external to the thermal insulation.

3.2 ampere turns: The product of the number of turns and the ac amperes flowing in an induction heating coil.

3.3 certification: Attesting that unit has demonstrated ability to perform in accordance with pre-established criteria.

3.4 certifying agency: Organization, office, or individual that validates that equipment meets tests and standards.

3.5 contaminant: Any solid or liquid material which is not an intended ingredient.

3.6 Curie temperature: The temperature at which the magnetic properties of a substance change from ferromagnetic to paramagnetic.

3.7 dead leg: A portion of a piping system, without flow, used to simulate the overall system conditions for control sensing.

---

[1]AEIC publications are available from the Association of Edison Illuminating Companies, 600 N. 18th Street, P. O. Box 2641, Birmingham, AL 35291-0992, USA (http://www.aeic.org/). AEIC publications are also available from Global Engineering Documents, 15 Inverness Way East, Englewood, Colorado 80112-5704, USA (http://global.ihs.com/).

[2]ANSI publications are available from the Sales Department, American National Standards Institute, 11 West 42nd Street, 13th Floor, New York, NY 10036, USA (http://www.ansi.org/).

[3]ASTM publications are available from the American Society for Testing and Materials, 100 Barr Harbor Drive, West Conshohocken, PA 19428-2959, USA (http://www.astm.org/).

[4]IEEE publications are available from the Institute of Electrical and Electronics Engineers, 445 Hoes Lane, P.O. Box 1331, Piscataway, NJ 08855-1331, USA (http://standards.ieee.org/).

[5]UL standards are available from Global Engineering Documents, 15 Inverness Way East, Englewood, Colorado 80112, USA (http://global.ihs.com/).

Copyright © 2000 IEEE. All rights reserved.

Copyright The Institute of Electrical and Electronics Engineers, Inc.
Provided by IHS under license with IEEE
No reproduction or networking permitted without license from IHS
Not for Resale

3.8 depth of current penetration: The thickness of a layer extending inward from the surface of a conductor that has the same resistance to dc as the conductor as a whole has to ac of a given frequency.

3.9 eddy current: Current that circulates in a metallic material as a result of electromotive forces induced by a variation of magnetic flux.

3.10 effective flux penetration (*P*): The distance into a pipeline or a vessel wall that the value of current induced by the magnetic field at the surface would have to penetrate in order to generate the same heat as generated by the actual induced current distribution in the wall.

3.11 extra flexible: Cable or conductor with a minimum flexibility of ASTM Class D stranding.

3.12 ferromagnetic envelope: A pipe, tube, angle, or channel of ferromagnetic material used as a raceway to enclose a skin-effect cable.

3.13 ferromagnetic material: A material that, in general, exhibits hysteresis phenomena and whose permeability is dependent on the magnetizing force.

3.14 ground detector: An instrument or equipment used for indicating the presence of a ground on an ungrounded system.

3.15 ground leak/fault detector: A device that detects an abnormally low electrical resistance from an isolated electrical circuit to ground.

3.16 heat loss: A quantitative value of the rate of energy flow from a pipe, a vessel, or equipment to the surrounding ambient.

3.17 heat sink: A part that conducts and dissipates heat away from the pipeline or the vessel. Heat sinks, as related to pipe heating systems, can be pipe supports, valve operators, etc.

3.18 hot zone: The parts of an induction susceptor heating system that operate at significantly elevated temperatures. This includes the susceptor and load.

3.19 impedance heating: An electric heating system where the object to be heated generates heat as a result of an ac current passing through it.

3.20 induction coil: A helical electrical conductor of one or more electrical turns, usually of a shape conforming to that of the outside of the vessel, pipeline, or susceptor, in which time varying magnetic flux is produced by an alternating flow of electrical current.

3.21 induction heating: The generation of heat in any conducting material by means of magnetic flux-induced currents.

3.22 magnetic flux (ϕ): A condition in a medium produced by a magnetomotive force such that when altered in magnitude, a voltage is induced in an electric circuit linked with the flux.

3.23 magnetic flux density (β): Flux per unit area through an element of area normal to the direction of flux.

3.24 magnetic flux leakage: That portion of the total magnetic flux in a circuit that does not intercept the material that contains the magnetic flux doing the heating.

Copyright © 2000 IEEE. All rights reserved.
Copyright The Institute of Electrical and Electronics Engineers, Inc.
Provided by IHS under license with IEEE
No reproduction or networking permitted without license from IHS
Not for Resale

3.25 magnetic hysteresis: The property of a magnetic material to convert electric energy to heat by virtue of the fact that the magnetic induction for a given magnetizing force depends upon the previous conditions of magnetization.

3.26 magnetic yokes (shunts): Magnetic lamination stacks arranged vertically between the vessel wall and induction coil. These provide a low reluctance return path to the magnetic flux generated by and external to the induction coil to prevent stray flux from heating vessel wall or exterior supports.

3.27 maintain temperature: Specified temperature of the fluid or process material that the heating system is designed to hold at equilibrium under specified design conditions. *Syn*: **maintenance temperature**.

3.28 maximum exposure temperature: The highest temperature to which an object may be exposed continuously.

3.29 pass through: An electrical conductor assembly that is designed to carry the coil current through a vessel wall, while keeping the conductors electrically insulated and preventing excessive induction heating of the vessel port.

3.30 permeability (μ): Ratio of the magnetic flux density to the corresponding magnetizing force.

3.31 pipeline: A length of pipe, including pumps, valves, flanges, control devices, strainers, or similar equipment for conveying fluids.

3.32 power factor: The ratio of the circuit power (watts) to the circuit volt amperes.

3.33 power port: An opening through which the pass-through conductors enter the vessel. The area around the conductors is made of an electrical insulating material designed to seal and withstand the differential pressure between the inside and outside of the vessel.

3.34 runaway pipeline (vessel) temperature: The highest equilibrium temperature on the pipeline or the vessel that can occur when the heating system is continuously energized in the maximum ambient temperature.

3.35 saturation flux density (β_s): The maximum possible magnetic flux density in a material.

3.36 skin-effect heating: An electric heating system where a conductor inside a ferromagnetic envelope material generates heat via I^2R losses in the conductor and ferromagnetic material.

3.37 soft start: The ability of a controlling device to apply power to a load upon energization in a proportional manner, irrespective of values of the controlling signals.

3.38 susceptor: An energy absorbing device generally used to transfer heat to another load.

3.39 susceptor heating containment vessel: A closed container designed to contain an induction coil in a protective atmosphere. The atmosphere can be a vacuum, an inert gas, or a process gas selected to react with the product within the susceptor. The vessel must be designed to safely withstand the pressure differential between the inside and the outside and any heat load conducted or radiated to the vessel walls.

3.40 thermal insulation: Material having air- or gas-filled pockets, void spaces, or heat-reflective surfaces that, when properly applied, will reduce the transfer of heat with reasonable effectiveness under ordinary conditions.

3.41 thin wall susceptor: A susceptor in which the calculated depth of penetration is greater than the susceptor wall thickness.

Copyright © 2000 IEEE. All rights reserved.

Copyright The Institute of Electrical and Electronics Engineers, Inc.
Provided by IHS under license with IEEE
No reproduction or networking permitted without license from IHS
Not for Resale

3.42 type test: A test or series of tests carried out on heating cables or surface heating devices and accessories, representative of a type, to determine compliance of the design, construction, and manufacturing methods within the requirements of this standard.

3.43 vessel: A container such as a barrel, a drum, or a tank for holding fluids or other material.

3.44 water cooled leads: Electrical power conductors that are cooled by circulating water through a nonconductive hose which contains the conductors.

3.45 weather barrier: Material that, when installed on the outer surface of thermal insulation, protects the insulation from water or other liquids; physical damage caused by sleet, wind, or mechanical abuse; and deterioration caused by solar radiation or atmospheric contamination.

3.46 zoning: A division of circuits to minimize different conditions in any one circuit, so the temperature at the location of a sensor is typical for the complete circuit.

4. General product testing

All tests shall be conducted at room temperature between 10 °C and 40 °C unless otherwise noted. Type test sample selection shall include all material constructions and shall be based on a worst-case size criterion where applicable.

Products may be deemed to have met a specific requirement of this recommended practice, based on documented alternate testing of the product which meets or exceeds the stated requirement, when agreed between the submitter and certifying agency.

4.1 General product type tests for impedance heating power cable

The following type tests are intended to qualify impedance heating power cables for the application within the scope of the standard.

4.1.1 Sunlight resistance test

A resistance to sunlight test shall be performed on samples of impedance heating power cable in accordance with Clause 1200 of UL 1581-1997.

4.1.2 Flammability test

A vertical flame test shall be performed on samples of impedance heating power cable in accordance with IEEE Standard 1202-1991.

4.1.3 Impact resistance test

An impact resistance test shall be performed on samples of impedance heating power cable in accordance with Clause 593 of UL 1581-1997.

4.2 General product type tests for induction heating

The following type tests are intended to qualify induction heating power cables for the application within the scope of this recommended practice.

Copyright © 2000 IEEE. All rights reserved.
Copyright The Institute of Electrical and Electronics Engineers, Inc.
Provided by IHS under license with IEEE
No reproduction or networking permitted without license from IHS
Not for Resale

4.2.1 Sunlight resistance test

A resistance to sunlight test shall be performed on samples of induction heating power cable in accordance with Clause 1200 of UL 1581-1997.

4.2.2 Flammability test

A vertical flame test shall be performed on samples of induction heating power cable in accordance with IEEE Standard 1202-1991.

4.2.3 Impact resistance test

An impact resistance test shall be performed on samples of induction heating power cable in accordance with Clause 593 of UL 1581-1997.

4.3 General product type tests for susceptor heating furnaces within a vessel

This clause is intentionally left blank for future use.

4.4 Product testing for skin-effect heating systems

4.4.1 Type tests for skin-effect heating systems

The following type tests are intended to qualify skin-effect cables for the application within the scope of this recommended practice.

4.4.1.1 Dielectric test

A 3 m sample of skin-effect cable with the exception of the ends shall be immersed in water for a minimum period of 6 h. An ac test voltage, as indicated in Table 1, shall be applied between the skin-effect cable and tap water at room temperature (dielectric volume resistivity typically 50 000 Ω·cm).

Table 1—Skin-effect dielectric test

Skin effect cable rating (Vac)	AC hi-pot voltage (kV)
0–600	5.5
601–2000	7.0
2001–3000	11.0
3001–5000	13.0

The test voltage shall be applied at a rate of rise neither less than 100 V/s nor more than 200 V/s and maintained for 5 min. The test voltage waveform shall be essentially sinusoidal, with a frequency of 45–65 Hz. No dielectric breakdown shall occur.

Copyright © 2000 IEEE. All rights reserved.

Copyright The Institute of Electrical and Electronics Engineers, Inc.
Provided by IHS under license with IEEE
No reproduction or networking permitted without license from IHS
Not for Resale

4.4.1.2 Elevated temperature exposure dielectric test

A 3 m sample of skin-effect cable shall be placed in a forced-circulation air oven. The oven shall be heated to, and maintained at, a temperature of 25 °C ± 5 °C above the highest exposure temperature declared by the manufacturer for a period of 21 days. The sample shall be removed from the air oven and cooled to room temperature. The sample shall be wound six close turns around a mandrel having a radius equal to twelve times the diameter of the primary bending plane or thickness of the conductor. While still on the mandrel the sample, except for the ends where the conductor is exposed, shall be submerged in tap water at 10–25 °C for 5 min. While still in the tap water, the dielectric test in 4.4.1.1 shall be performed. Upon completion of the test, the sample shall have no visible cracks when examined with normal vision.

4.4.1.3 Cold bend test

The apparatus used for the bend test shall be as represented in Figure 1. A 3 m sample of skin-effect cable shall be fixed in the apparatus as shown in Figure 2. With the test sample in position, the apparatus shall be placed in a refrigerated compartment and maintained at a test temperature value 20 °C below the manufacturer's minimum recommended installation temperature for a period of not less than 4 h. At the end of this period, and with the sample maintained at the test temperature, the sample shall be bent through 90° around one of the bending mandrels, then bent through 180° in the opposite direction over the second bending mandrel and straightened to its original position. All the bending operations shall be carried out in the same plane. This sequence of operations shall be performed three times. When this has been completed, the sample shall be immersed in tap water at room temperature for 5 min, and then the dielectric test in 4.4.1.1 shall be conducted on the sample.

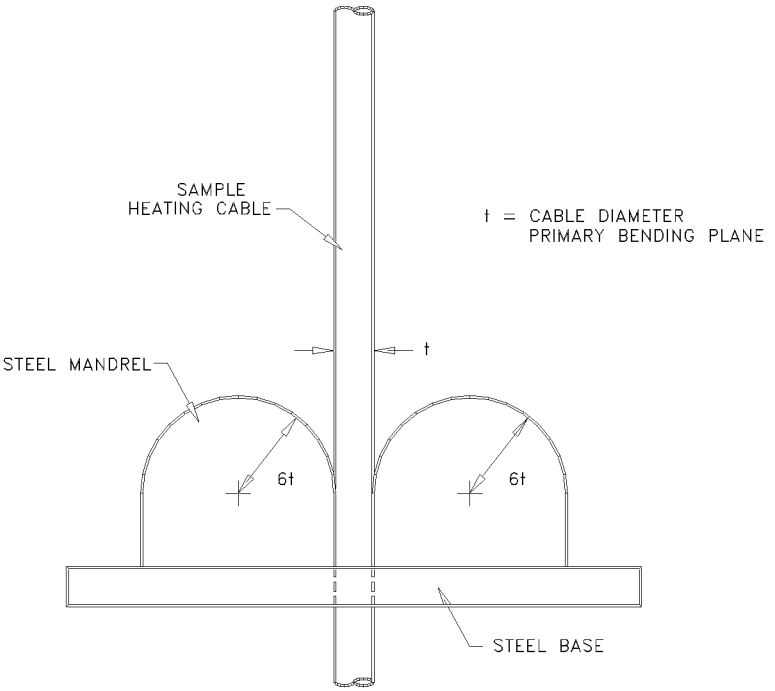

Figure 1—Cold bend test apparatus

4.4.1.4 Abrasion resistance test

This test shall be applied to three representative samples of the largest and the smallest skin-effect cables.

Copyright © 2000 IEEE. All rights reserved.
Copyright The Institute of Electrical and Electronics Engineers, Inc.
Provided by IHS under license with IEEE
No reproduction or networking permitted without license from IHS
Not for Resale

4.4.1.4.1 Apparatus

The apparatus, as illustrated in Figure 2, shall consist of a machine designed to hold a specimen of finished cable in a horizontal position and under tension. The specimen shall be mounted using a sash chain at each end, one being fastened to a rigid support while the other is passed over a pulley free to rotate about its fixed axis and subjected to tension by means of a weight (W).

The distance between the rigidly supported end and the axis of the pulley shall be 1.5 m. A wooden block approximately 65 mm thick and having a 89 mm radius curved surface on the underside shall be attached to a pivoted arm. The pivot point of the arm shall be 178 mm from the curved surface of the block at the center of the 1.5 m span.

A reciprocating shaft connected to the arm shall oscillate the skin-effect cable through an arc of approximately 100°, at the rate of 20 ± 1 cycles/min, in the same direction as the axis of the test specimen. By means of a ratchet device, the block automatically shall move in a transverse direction of approximately 2 mm/min. The machine shall also be provided with a counting device to record the number of cycles.

The position of the block in relation to the surface of the specimen to be abraded shall be such that the specimen is depressed from its original horizontal position a distance of 25 mm when the block is at the center point of its swing. With the block in that position, it shall be in contact with the cable at approximately the midpoint of the length of the specimen.

The abrading medium, which shall consist of medium grade emery cloth (80 grit), shall be held in close contact with the curved surface of the block by mechanical means. The emery cloth shall be refreshed each time the arm reaches the end of its transverse travel.

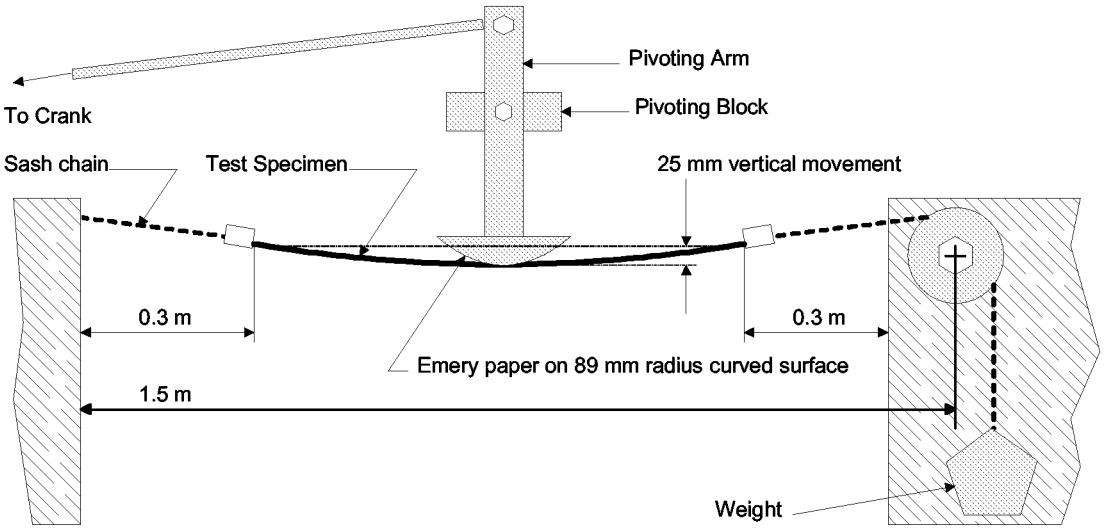

Figure 2—Abrasion resistance test apparatus

4.4.1.4.2 Procedure

Six specimens of finished cable, each of 0.9 m in length, shall be placed in the test fixture abrasion machine one at a time and abraded for a calculated number of cycles. The number of cycles shall be calculated in accordance with 4.4.1.4.3. Fresh emery cloth shall be used for each specimen.

4.4.1.4.3 Calculation of weight and number of cycles

Calculation of the number of test cycles N_t is determined by the following equation:

Copyright © 2000 IEEE. All rights reserved.

Copyright The Institute of Electrical and Electronics Engineers, Inc.
Provided by IHS under license with IEEE
No reproduction or networking permitted without license from IHS
Not for Resale

$$N_t = FLC/W_t \quad (1)$$

where

N_t is the number of test cycles required for each test (a cycle being one complete motion of the pivoting arm from the start position to the end of travel and back to the start position).

F is the manufacturer's stated maximum pulling force (kg, newton).

L is the manufacturer's stated maximum unspliced length (m).

C is the constant 0.2 kg (0.0204 N).

W_t is the test weight used in the apparatus for the actual tests which can be chosen to be any value which can be practically utilized in the test fixture abrasion machine (kg).

Example calculation of the number of test cycles: Based on an example cable where the manufacturer's stated maximum pulling force (F) is 45.4 kg (445 N), and the maximum stated unspliced length (L) is 457 m, the test weight (W_t) used in the test apparatus is 13.6 kg, and the calculation is as follows:

N_t = 45.4 x 457 x 0.2 / 13.6 kg = 305 cycles

4.4.1.4.4 Proof test

After abrading for the required number of cycles, each sample shall be tested using the ac dielectric test in 4.4.1.1.

4.4.1.5 Heat distortion test

A 200 mm sample of skin-effect cable, along with the weight/frame test fixture, shall be placed in a forced-circulation air oven. The oven shall be heated to, and maintained at, a test temperature which is 25 °C above the insulation rating.

A 9.5 mm diameter bearing surface having a weight of 300 g at oven temperature shall be placed onto the skin-effect cable for a period of 1 h. The skin-effect cable insulation shall be measured using a dial micrometer before and after the 1 h application of the weight. The insulated cable specimen shall be measured as follows: The diameter (D), in millimeters, over the insulation at a marked position shall be measured using a dial micrometer. The diameter (d), in millimeters, of the conductor, shall also be measured, and the thickness (T) of the insulation shall be calculated as follows:

$$T = D - d/2 \quad (2)$$

The distortion characteristic shall be determined as follows:

$$\text{Distortion (\%)} = \frac{T\ \text{initial} - T\ \text{final}}{T\ \text{initial}} \times 100 \quad (3)$$

The heat distortion of the skin-effect cable measured shall not exceed 30%.

4.4.1.6 Corona discharge rating test (for skin-effect cables rated at 2001 vac or higher)

Nonshielded skin-effect cables rated 2001 V or higher shall be subjected to one of the following two corona discharge tests.

Copyright © 2000 IEEE. All rights reserved.
Copyright The Institute of Electrical and Electronics Engineers, Inc.
Provided by IHS under license with IEEE
No reproduction or networking permitted without license from IHS
Not for Resale

4.4.1.6.1 Corona discharge rating test

A minimum of three 1.5 m samples are each mounted separately in 13 mm or larger steel tubes (tube size is to be representative for the conductor size and the application). Test voltage is applied between the skin-effect cable conductor and the heat tube while at room temperature. The voltage is raised in 200 V increments holding each level for 1 min until the corona inception voltage [the inception voltage (CIV) being defined as the voltage at which more than 5 pC of discharge occurs] is attained as detected by a partial discharge meter, measurement circuit (circuit No. 3 in ASTM D1868-93), and an oscilloscope. The CIV is recorded. The voltage level is then increased in 200 V to 250 V steps to a voltage level equal to 20% greater than the minimum CEV level expected but not exceeding the dielectric voltage test levels defined in 4.4.1.1. Subsequently, the voltage is lowered in 200 to 250 V increments with a pause of 1 min at each level until the corona extinguishes [the extinguish point (CEV) being defined as the voltage at which the discharge ceases or drops below 5 pC]. The CEV level is recorded. The procedure is then repeated at higher skin-effect cable temperature levels in order to obtain corona ratings up to the maximum conductor temperature rating. Where various insulation thicknesses are to be implemented, two or more test thicknesses are required to validate calculation methodology of design thicknesses and ratings for a given material. All corona discharge ratings shall be based on the primary insulation thickness only and shall not consider any sacrificial scuff jacket thickness. Skin effect cable voltage ratings shall not exceed 80% of the average CEV value of the samples and shall not be more than the lowest measured CEV value of any one sample.

4.4.1.6.2 Optional U-bend corona withstand test

This test may be used in lieu of the corona discharge rating test of 4.4.1.6.1 for voltage ratings between 2001 V and 5000 V. Four sample lengths of finished skin-effect cable, each at least 1.5 m long are to be prepared. Two of the samples are to be bent at their midpoints for 180° around a mandrel with a diameter equal to six times the cable outside diameter. The sides (legs) of each U-bend specimen is to be supported separately with its bend down and the legs of the U extending upward in a vertical plane. The center of each bend is to rest on a flat, horizontal metal plate that is earth grounded. A 48–62 Hz essentially sinusoidal RMS test potential of 13 kV magnitude is to be applied between the conductor in each test specimen and the grounded metal plate for a minimum of 6 h. The cable is acceptable if neither of the first specimens break down electrically and there is no visible cracking, erosion, or tracking of the outside surface. A change in color or glossiness or other appearance is not cause for rejection. If either of the first two specimens break down or show cracking, erosion, or tracking, the test is to be repeated on the remaining two specimens. The cable is not acceptable if either of the two additional specimens break down or show cracking, erosion, or tracking.

4.4.1.7 Skin Effect Splice Pullbox Type Test

The skin-effect pullboxes shall be designed and tested to meet or exceed the requirements of either the NEMA 4 rating in accordance with NEMA-250-1999 [B26][6] or IP-56 in accordance with IEC 60529:1991 [B14].

4.4.1.8 Splice Resistance to Moisture Test

A sample of skin-effect cable at least 3 m in length that includes a factory- or field-assembled splice connection shall be placed in a forced-circulation air oven. The oven shall be heated to, and maintained at, a temperature of 25 °C ± 5 °C above the maximum exposure temperature declared by the manufacturer for a period of 21 days. The aged sample shall then be placed in a water flow and drain apparatus as shown in Figure 3. The rate of the water flow shall be regulated to completely cover the skin-effect cable and the splice termination, at a minimum of every 5 min. Activation of the water flow solenoid and heating device shall be controlled by a cam switch or equivalent means. The timing sequences shall be such that the skin-effect cable shall be energized for 30 s at its maximum room temperature declared current rating after the

[6]The numbers in brackets correspond to those of the bibliography in Annex A.

--`,,```,,,,````-`-`,,`,,`,`,,`---

Copyright © 2000 IEEE. All rights reserved.

Copyright The Institute of Electrical and Electronics Engineers, Inc.
Provided by IHS under license with IEEE
No reproduction or networking permitted without license from IHS
Not for Resale

water has been drained. The test shall be continued for a period of 24 h. At the end of the test period, the dielectric test in 4.4.1.1 shall be performed on the skin-effect cable/splice sample.

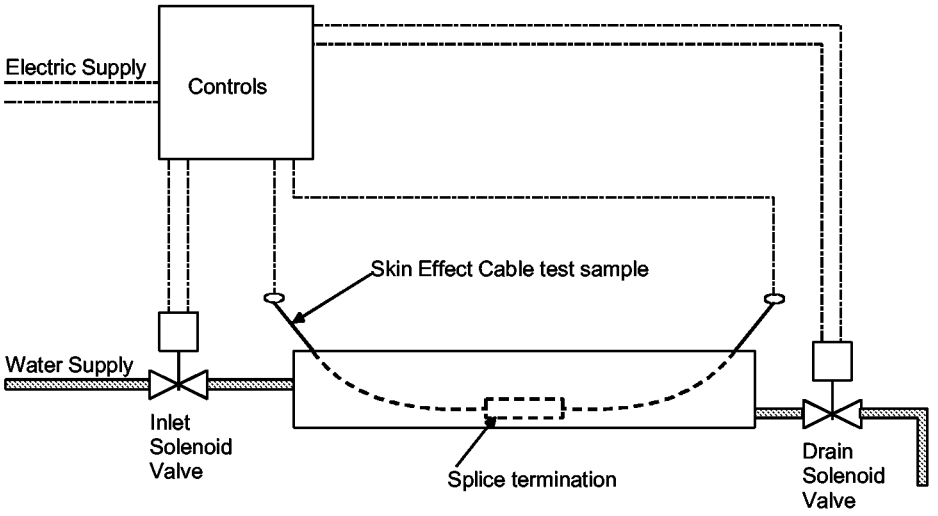

Figure 3—Skin effect cable—Splice resistance test apparatus

4.4.1.9 Conductor resistance test

The resistance of the skin-effect cable shall be verified. The measured dc resistance or resistance per unit length at a specified temperature shall be within the manufacturer's declared tolerance.

4.4.1.10 Power output and system impedance verification

The manufacturer shall demonstrate the ability to predict power output and system impedance by conducting tests on representative installations and comparing the results to design predictions. The apparatus described in 4.4.1.10.1 shall be used by applying either the test method in 4.4.1.10.2 or 4.4.1.10.3.

4.4.1.10.1 Apparatus

A test skin-effect system of at least 5 m in length shall be built in accordance with the manufacturer's instructions. The test skin-effect system shall be installed on a 50 mm (2 in NPS) steel pipe or larger, and shall be insulated with a minimum of 38 mm thick thermal insulation of the manufacturer's choosing. The selection of the heat tube and skin-effect cable combinations shall be agreed upon by the system manufacturer and the certifying agency and shall be representative of typical system installations. The test system shall include, at minimum, typical power and end termination boxes, and optionally, may include a pull/splice box. Low mass laboratory type temperature sensors shall be used to monitor the pipe, heat tube, and skin-effect cable sheath temperatures at anticipated hot spot areas to the discretion of the certifying agency. A power supply transformer with multiple taps capable of supplying the maximum rated current for the selected heat tube/skin-effect cable combination shall be provided.

4.4.1.10.2 Stagnation method

Operating voltage, current, power factor, heat tube length, heat tube temperature, skin-effect cable sheath temperature, and process pipe temperature shall be recorded at three power levels and three process pipe temperature levels (attained by varying the insulation heat loss or taking measurements during heat up) which cover the normal design power/maintenance temperature range of the heat tube/skin-effect cable. The measured skin-effect system power output and impedance per unit length shall be within 10% of the calculated/predicted impedance at the measured heat tube temperature.

Copyright © 2000 IEEE. All rights reserved.
Copyright The Institute of Electrical and Electronics Engineers, Inc.
Provided by IHS under license with IEEE
No reproduction or networking permitted without license from IHS
Not for Resale

4.4.1.10.3 Flow method

The apparatus described in 4.4.1.10.1 shall be used. The process pipe shall be connected into a temperature controlled circulating fluid system. Operating voltage, current, power factor, heat tube length, heat tube temperature, skin-effect cable sheath temperature, and process pipe temperature shall be recorded at three power levels and at three different pipe temperatures, which cover the normal design power range/maintenance temperatures of the heat tube/skin-effect cable. The measured skin-effect system power output and impedance per foot shall be within 10% of the calculated/predicted impedance at the measured heat tube temperature.

4.4.1.11 Verification of sheath temperatures

The manufacturer shall demonstrate the ability to predict skin-effect cable sheath temperatures by conducting tests on representative installations and comparing the results to design predictions. The apparatus described in 4.4.1.10.1 shall be used. Operating voltage, current, power factor, heat tube length, heat tube temperature, skin-effect cable sheath temperature, and process pipe temperature shall be recorded at three different power levels. The measured skin-effect cable sheath temperature shall not exceed the manufacturer's calculated/predicted value.

4.4.2 Routine testing

These tests shall be carried out by the manufacturer during or after production to verify conformance to the manufacturer's specifications.

4.4.2.1 Resistance test

The measured dc resistance per unit length of the skin-effect cable at a specified temperature shall be within the manufacturer's declared tolerance.

4.4.2.2 Dielectric tests

The tests consists of voltage tests on each length of a completed cable that would be used as the conductor in a skin-effect heating system. Cables rated 0–2000 V shall be submitted either to a dielectric spark test (ac or dc) or to an ac dielectric test. Cables rated 2001–5000 V shall be submitted either to an ac dielectric test, to a dc dielectric test, or to an impulse spark test at 1.414 x ac test value as determined by 4.4.2.2.2.

4.4.2.2.1 Dielectric spark test

During the manufacturing each foot of a cable shall withstand, without failure, a spark test in accordance with Table 2 below and Clause 900 of UL 1581-1997.

Table 2—Dielectric spart test

Skin effect cable nominal voltage (Vac)	AC spark test voltage (KV)	DC spark test voltage (kV)
0–600	10	16
601–2000	15	22.5

4.4.2.2.2 AC dielectric test

The completed cable, with the exception of the ends, shall be immersed in water at room temperature for at least 6 h. An ac test voltage as indicated in Table 3 shall be applied between the conductor and the water. The test voltage waveform shall be basically sinusoidal with a frequency between 45 Hz and 65 Hz. The

Copyright © 2000 IEEE. All rights reserved.

Copyright The Institute of Electrical and Electronics Engineers, Inc.
Provided by IHS under license with IEEE
No reproduction or networking permitted without license from IHS
Not for Resale

initial test voltage shall be equal to the nominal voltage rating of the cable. The duration of the test shall be 5 min. The test method shall be in accordance with Clause 820 of UL 1581-1997.

Table 3—AC dielectric test

Skin effect cable nominal voltage (Vac)	AC voltage test (KV)
0–600	5.5
601–2000	7.0
2001–3000	11.0
3001–5000	13.0

4.4.2.2.3 DC dielectric test

The completed cable, with the exception of the ends, shall be immersed in water at room temperature for at least 6 h. The initial test voltage shall be equal to 3.0 times the nominal ac voltage rating of the cable. A dc test voltage as indicated in Table 4 shall be applied between the conductor and the water. The duration of the test shall be 5 min. The test method shall be in accordance with Clause 820 of UL 1581-1997.

Table 4—DC dielectric test

Skin effect cable nominal voltage (Vac)	DC voltage test (kV)
0–600	15.0
601–2000	22.5
2001–3000	25.0
3001– 5000	30.0

4.4.2.3 Gels, agglomerates, contaminants, and voids test (for skin-effect cable rated 2001 vac or higher)

A minimum of one skin-effect cable sample of 50 mm in length from each production run (with additional samples being taken at 3048 m intervals) shall be cut helically or some other convenient manner to produce thin samples of the insulation. Wafers (or the turns of the helix) shall be cut with a thickness of approximately 0.635 mm producing approximately 80 wafers. The entire area of twenty consecutive wafers (or equivalent helical turns) shall be examined with a 15 power magnification microscope with reflected light. The examined samples can not have 1) any voids larger than 0.102 mm, 2) any contaminants larger than 0.254 mm, or 3) gels and agglomerates larger than 0.254 mm in the greatest dimension. The test method shall be in accordance with AEIC CS6-96.

5. Thermal insulation

The primary function of thermal insulation is to reduce the rate of heat transfer from or to a surface that is operating at a temperature other than ambient. Thermal insulation is applied to piping systems for personnel protection and energy conservation. This reduction of energy loss can reduce operating expenses, improve system performance, and increase system output capability. Conversely, improperly applied or maintained thermal insulation may render an electric heating system totally ineffective.

Copyright © 2000 IEEE. All rights reserved.
Copyright The Institute of Electrical and Electronics Engineers, Inc.
Provided by IHS under license with IEEE
No reproduction or networking permitted without license from IHS
Not for Resale

Prior to any heat loss analysis for an electrically heated pipe or vessel, a review of the selection of the insulation is recommended. The principal areas for consideration are as follows:

a) Selection of insulation material

b) Selection of insulation thickness

c) Selection of insulation size

5.1 Selection of insulation material

The important aspects to be considered when selecting an insulation material are as follows:

a) Thermal characteristics

b) Mechanical properties

c) Chemical compatibility

d) Moisture resistance

e) Personnel safety characteristics

f) Fire resistance

g) Cost

Some common insulation materials available are as follows:

a) Calcium silicate

b) Fiberglass

c) Polyurethane

d) Mineral fiber

e) Polyisocyanurate

f) Expanded (perlite) silica

g) Cellular glass

h) Elastomeric foam

5.2 Selection of weather barrier

Proper operation of an electrically heated system depends upon the insulation being dry. Electrical heating systems normally have insufficient heat output to dry out wet insulation.

Some insulation materials, even removed from the piping and force-dried, never regain their initial properties after once being wet.

Piping insulation may be weather protected with either metal jacketing or a polymeric system. Smooth metal jacketing should be formed with modified S longitudinal joints. The circumferential end joints should be sealed with closure bands and supplied with sealant on the outer edge or overlapped; see Figure 4.

Metal jacketing should be overlapped such that the longitudinal joints are as shown in Figure 4. These joints should be oriented such that they shed water.

Copyright © 2000 IEEE. All rights reserved.

Copyright The Institute of Electrical and Electronics Engineers, Inc.
Provided by IHS under license with IEEE
No reproduction or networking permitted without license from IHS
Not for Resale

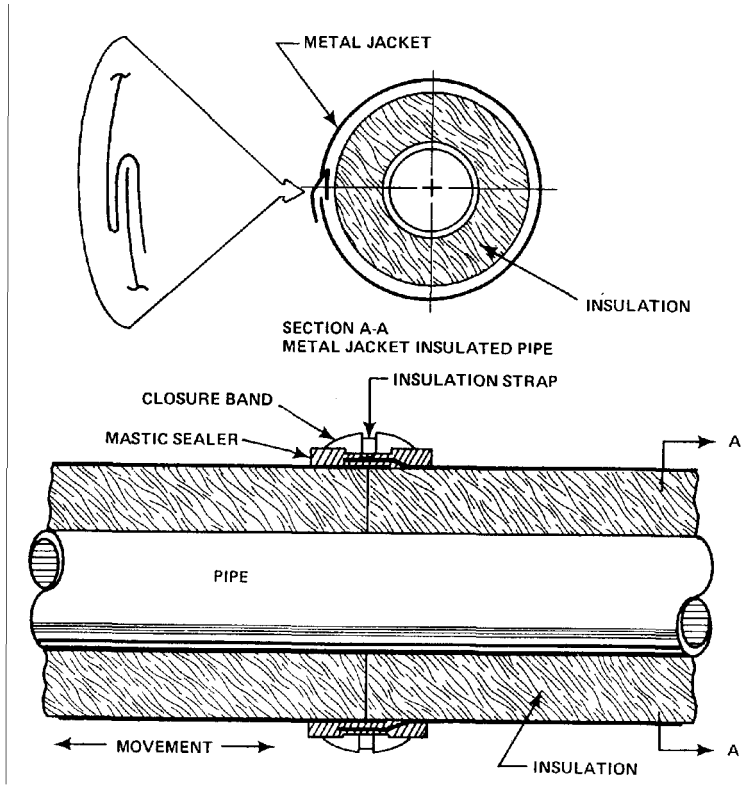

Figure 4—Thermal insulation metal weather barrier installation

Factory-applied thermal insulation and jacketing of a preinsulated piping system can have many configurations. Generally, the techniques used in applying the jacketing, whether in straight sections or spiral wound, are not repeatable under field conditions. The manufacturer's instructions should be followed in supporting the pipeline and sealing field joints to prevent intrusion of moisture.

Jacketing that is not overlapped or otherwise closed without sealant is not effective as a barrier to moisture. A single unsealed joint can allow a considerable amount of water to leak into the insulation.

The type of weather barrier used should be based on a consideration of the following:

a) Effectiveness in excluding moisture

b) Corrosive nature of chemicals in the area

c) Fire protection requirements

d) Cost

e) Resistance to ultraviolet radiation

f) Durability to mechanical abuse

5.3 Selection of insulation thickness

An economic consideration of the insulation will weigh the initial costs of materials and installation against the energy saved over the life of the insulation. Methods for analyzing the most economic thicknesses are

Copyright © 2000 IEEE. All rights reserved.
Copyright The Institute of Electrical and Electronics Engineers, Inc.
Provided by IHS under license with IEEE
No reproduction or networking permitted without license from IHS
Not for Resale

outlined in Energy Conservation Paper No. 46 [B11] and Turner and Malloy [B32]. In all cases, thermal insulation thickness should also be sized to provide personnel protection.

5.4 Special consideration of thermal insulation

5.4.1 Uniform heat loss

In most piping systems minor local temperature deviations are acceptable, since many fluids are not temperature sensitive to the point where they will affect product quality. In cases where extreme temperature sensitivity does necessitate close temperature control, it is imperative that the thermal insulation maintain uniform heat loss throughout the piping system. The entire heating system may be rendered ineffective if thermal insulation is not properly applied.

This problem is further amplified as temperatures are elevated. Most insulations suitable for use on high-temperature lines are mechanically rigid. Insulation should be cut to fit with minimum gaps. A ceramic wool for the filling of voids and irregularities at joints and heat sinks is preferred over insulating cements, which tend to become brittle after being cured and have poor insulating qualities. Normal thermal cycling of the process will, in time, cause the insulating cements to crack, exposing bare pipes and creating heat losses that are not normally anticipated.

Insulation covers for valves, flanges, pipe supports, and other irregularly shaped objects should be molded for the particular configuration or fabricated from block or several segments of the same material used for adjacent straight piping.

The use of custom-prefabricated removable insulation and weather barriers should also be considered for areas of high maintenance. Where insulation with a thermal conductivity different from that being applied to the pipe is used to totally insulate an irregular surface, the thickness of the insulation must be adjusted to compensate for differences in thermal conductivity and surface area. However, a custom fitting of the equipment with the same type of material is preferred. This is very important when dealing with impedance, induction, or skin-effect types of heating systems, since it is often difficult, if not impossible, to provide additional local heat to individual valves, flanges, pipe supports, or other heat sinks to compensate for the heat lost through irregular or exposed surfaces. An example illustrating this point is presented in Annex E.

5.4.2 Composite insulation systems

Insulation systems may be composed of two layers of the same type of insulation that are applied in such a manner to stagger the joints. The staggering of the joints radially and longitudinally would allow the insulation to flex with the thermal cycling of the pipeline. An alternative would be to construct the insulation with the inner layer having a temperature rating that withstands high temperature, and the outer layer having better insulating or moisture characteristics with a lower temperature rating.

These systems are superior to normal, single-layer insulations in terms of heat loss and deterioration with time. They may not be acceptable for every application because of spacing, cost, or other considerations. Other systems are available and should be examined on a case-by-case basis.

On very-high-temperature systems, designing to prevent radiation heat loss is critical, and insulation experts should be consulted.

5.4.3 Preinsulated pipe systems

A typical preinsulated piping system consists of a carrier pipe, insulation, and outer jacket. The preinsulated piping system is supplied from a single source of responsibility, fabricated and insulated in a controlled environment. Most commercially available insulation and piping materials can be incorporated into the

Copyright © 2000 IEEE. All rights reserved.

Copyright The Institute of Electrical and Electronics Engineers, Inc.
Provided by IHS under license with IEEE
No reproduction or networking permitted without license from IHS
Not for Resale

piping system. The use of preinsulated piping systems can offer the user and designer many advantages over conventionally insulated piping systems.

a) The heat tube of a skin-effect type heat trace system can be welded to the carrier or containment pipe with a controlled process, for a permanent and reliable heat path. Prefabricated fittings are supplied with the heat tube formed to the fitting, saving a field process.

b) The manufacturer of the preinsulated piping system can implement and monitor quality control procedures for the preparation and installation of the heat tube. This can provide a smooth bore, free of burrs, to ensure a successful cable installation.

c) The insulation is applied to the carrier or containment pipe with a controlled process, reducing the risk of field error.

d) The thermal insulation jacket provided with a prefabricated system minimizes seams found in a conventionally insulated system, making the preinsulated system durable and watertight.

e) Most preinsulated piping systems can be mechanically supported from the outer jacket, with a saddle placed between the insulation jacket and support. This eliminates the additional heat loss caused by conventional pipe supports.

When using preinsulated piping, the following are special considerations:

a) Preinsulated piping must be used on new systems only. It cannot be applied to existing piping.

b) Prefabricated, preinsulated systems may require detailed engineering design, prior to the fabrication of the system to allow proper supporting, anchoring, and allowance for expansion.

c) Installation should comply with all requirements of the preinsulated piping supplier. Substitutions should not be made without the agreement of the supplier.

d) The usage of the line should be considered prior to choosing the insulation materials.

5.4.4 Penetrations of the insulation

When necessary to penetrate the weather barrier and insulation for process instruments, pipetaps, or other reasons, the penetrations should be sealed with a flexible, UV resistant caulk and oriented such that they shed water due to rain, spills, sprinkler system operations, or routine hosing. Bottom penetrations are desirable. Consideration should be given to the effect of relative motion between the pipe and the weather barrier due to thermal expansion.

5.4.5 Maximum temperatures

The maximum surface temperature of the pipe or the vessel should be considered to the extent that none of the component ratings are exceeded in the application. This includes electrical insulation and isolation, thermal insulation, pipe wall material, process material, and control instrumentation. The maximum surface temperature of the thermal insulation should also be considered for personnel protection. Typically, the maximum surface temperature of the thermal insulation or weather barrier should not exceed 60 °C for personnel protection.

5.4.6 Wet insulation

Thermal insulations become ineffective when water is present. Hygroscopic insulations, such as calcium silicate, should be avoided for electric heating applications, unless special considerations are taken to exclude moisture.

Copyright © 2000 IEEE. All rights reserved.
Copyright The Institute of Electrical and Electronics Engineers, Inc.
Provided by IHS under license with IEEE
No reproduction or networking permitted without license from IHS
Not for Resale

5.5 Determination of energy losses

To determine actual energy losses for a given set of conditions, a complete insulation specification, including the thermal conductivity of the insulant at several mean temperatures, the type of weather barrier specified, insulation size and thickness, desired pipe maintenance temperature, and the minimum ambient temperature and wind conditions, is required.

Given these parameters, the heat loss may be evaluated by the use of Equation B.1 in Annex B. An example of such an evaluation is given in Annex B.

Equation B.1 models heat loss for an ideal system under controlled conditions. Heat losses in a typical installation will differ due to variations in installation techniques, components, and system deterioration. It is sound engineering judgment to add a safety factor to the calculated heat losses when sizing the heating system. This safety-factor approach is typical not only for Equation B.1, but for subsequent heat-loss equations referred to in this recommended practice.

5.6 Special considerations of energy loss

5.6.1 Heat-up considerations

It may be necessary to specify that the heating system be capable of raising the temperature of a static product to fluid flow temperature within a certain time period. The heating requirements may be evaluated by the use of Equation D.1 in Annex D. An example of such an evaluation is given in Annex D.

5.7 Thermal insulation system maintenance

The maintenance of thermal insulation systems is essential for lowest cost operation and for reliability. The reliability of an electric heating system is as dependent upon the thermal insulation system as upon the electric power system. A thermal insulation system is a sound investment; good maintenance protects that investment.

5.7.1 Maintenance of insulation

Maintenance of thermal insulation is needed, especially as follows:

a) The repair or replacement of damaged or soaked insulation caused by abuse, corrosion, leaks, or weathering.

b) The repair or replacement of damaged insulation resulting from access to valves, pumps, or other equipment. In all cases, if the thermal insulation is wet, it must be removed and replaced.

One of the most common problems with maintenance is that, when repairs to equipment necessitate the removal of thermal insulation, the insulation is generally torn off without regard to its reuse. When valves, fittings, and other equipment are insulated with preformed covers, they should be removed carefully so they can be reinstalled in their original configuration. When repairs are being made, attention should be given to the adjacent insulation so as not to damage it inadvertently. A temporary weather barrier should also be used to protect the insulation from rain, hosing, or spills. In many cases, it is advantageous to install a permanent weather barrier on the ends of insulation adjacent to sections that will be removed frequently for maintenance.

Copyright © 2000 IEEE. All rights reserved.

Copyright The Institute of Electrical and Electronics Engineers, Inc.
Provided by IHS under license with IEEE
No reproduction or networking permitted without license from IHS
Not for Resale

5.7.2 Maintenance of the weather barrier

The primary reason for the failure of a thermal insulation system is the failure of the weather barrier to exclude moisture. Weather barrier failures are attributable to the following:

a) Spillage of liquids

b) Corrosion

c) Pipeline leakage

d) Gaps or unsealed joints

e) Hot projections through the insulation

f) Cracks caused by thermal expansion

g) Mechanical abuse

h) Foot traffic

Minimization of corrosion, spills, and leaks should be an operating goal. The problems they cause to unsealed insulation are significant. Gaps and unsealed joints can be located by inspection during construction. Cracks developing after prolonged operation, due to thermal expansion, indicate the need for an expansion joint in the insulation system. Cracks on smooth protrusions may be eliminated by the use of metal flashing and sealants fitted flush along the protrusion, while irregular objects will require repeated resealing.

In areas of high maintenance, foot traffic, or mechanical abuse, the weather barrier may have to be of additional strength, or an additional sheet of metal covering may need to be installed over the existing weather barrier to provide sufficient protection.

6. Control and monitoring

6.1 Control types

6.1.1 On-off controls

On-off is the simplest, least expensive form of control. It can be accomplished manually or automatically from an external signal, usually temperature activated. Contactors are usually used for service switching because of their simplicity and ability to control large amounts of power repetitively. Contactors should be sized for continuous load and inrush currents on cold load starts. Mechanical and contact life considerations may require a larger size contactor than is indicated by the electric load. The temperature control band is a compromise between accuracy of control, limitations on the number of operations of the contactor, and system design, so that the control range is usually broader than with other types of control. Contactors have moving parts, draw arcs when breaking circuits, are noisier, and require more maintenance than solid-state controllers. Use of mercury contactors alleviates noise and life problems. Enclosures must be suitable for the environment. It is critical with on-off control that the heating system match the service voltage available.

6.1.2 Analog (proportional) control

Analog control devices match the output power to the needs of the heating system and provide a stable load on the electrical distribution system as long as the heating requirements remain constant. They require a continuous signal whose level varies with measured temperature at the control point. Depending on the accuracy of the sensor and controller, they can control temperature very closely. These devices have no

Copyright © 2000 IEEE. All rights reserved.
Copyright The Institute of Electrical and Electronics Engineers, Inc.
Provided by IHS under license with IEEE
No reproduction or networking permitted without license from IHS
Not for Resale

moving parts, are relatively maintenance free, and have a long life provided they are properly installed and electrically protected. They do not mechanically open the circuit, so a switch and contactor, or a shunt-trip circuit breaker, should be provided in a series with the controller for overtemperature protection and circuit isolation. The following are commonly used analog control devices for heating applications.

6.1.2.1 Saturable core reactors

These devices can vary output voltage from approximately 10% to 100%, in proportion to the current in a dc control winding. The dc source can be controlled to provide soft-start capabilities. Reactors are constructed similarly to transformers and have an inherent ability to withstand voltage and current surges and overloads. Losses are dependent on coil and core construction, but generally are similar to losses in a transformer of equal size. Operation in the lower control range will result in a low system power factor. They are large, heavy, and expensive when compared to silicon-controlled rectifiers (SCRs).

6.1.2.2 Phase-angle-fired SCRs

These devices can continually vary output voltage from 0% to 100% by turning on for a varying portion of each half-cycle. The firing circuit is controlled to vary the firing time and can be equipped with a soft-start option to limit inrush to inductive loads. A current limit circuit is available to limit current to match the load and for control of cold start currents on variable resistance heaters. They require both voltage surge and thermal energy (I^2t) protection because of limited dielectric and thermal capabilities.

The chopping action of the SCR imposes harmonics on the electric system, which can be a problem when this type of load is a large percentage of the total system load. When phase control is adjusted for low output voltage, the distribution system power factor will be low. Meters that will read rms values of nonsinusoidal waves should be used. The most likely mode of failure is full on. There is usually a 1–2% loss in power in the control package. These devices must be packaged to suit the environment.

NOTE—Zero-fired (burst-fired) SCRs are not recommended.

6.2 Zoning and sensor location

To heat and control pipelines or vessels properly, consideration must be given to establishing heating zones that can be separately controlled. Many factors must be taken into consideration when establishing zones and locating sensors to properly control the zone.

6.2.1 Ambient conditions

For any single heating zone, the ambient conditions should be nearly uniform or the temperature differentials resulting from different ambient conditions should be acceptable. The complete zone should be either outdoors or indoors. Ambient temperatures and wind and sun loading conditions should be comparable in all portions of the zone.

6.2.2 Physical conditions

Pipelines or vessels that are to be in a single zone should be of equal size or have uniform heat loss. Consideration should be given to the chimney effect on sloped or vertical pipe runs, which tends to raise the temperature at the top because of convection.

6.2.3 Process Conditions

Required temperatures should be uniform throughout the zone. Flow conditions should be similar in all pipelines heated in a single zone. Varying fluid levels in vessels should be given consideration.

Copyright © 2000 IEEE. All rights reserved.

Copyright The Institute of Electrical and Electronics Engineers, Inc.
Provided by IHS under license with IEEE
No reproduction or networking permitted without license from IHS
Not for Resale

6.2.4 Temperature control sensor location

6.2.4.1 Ambient sensing

Ambient sensing may provide acceptable control to maintain a minimum temperature, such as for freeze protection. The sensor should be located where ambient conditions are typical and should be protected from direct sunlight.

6.2.4.2 Pipe or vessel sensing

The pipeline or vessel temperature sensor should be located so that response is typical for the complete zone. To maintain a minimum temperature, the sensor should be located on the coldest pipeline, at the bottom of vertical runs, in the coldest ambient, and in nonflowing lines. The sensor should be a minimum of 1 m from in-line heat sources or heat sinks. For skin-effect systems, the sensor should be located to avoid any direct temperature effect from the ferromagnetic envelope. If flow patterns are unpredictable, consideration should be given to locating the sensor on a dead leg (a segment of process piping that is not in the flow pattern). Overtemperature must be considered in applying these recommendations.

6.3 Types of sensors

Temperature sensor characteristics are shown in Table 5.

Table 5—Temperature sensor characteristics

Sensor type	Thermostat	Thermocouple	Thermistor	RTD
Signal	On-Off	Millivolt	Resistance	Resistance
Accuracy	Fair	Good	Very Good	Excellent
Response	Fair	Excellent	Very Good	Good
Interchangeability	Good	Very good	Good	Very good
Stability	Fair	Good	Very Good	Excellent
Range	Broad	Broad	Narrow	Broad

NOTE— Table characteristics are for sensors, and users should be aware that system control may be affected by the type of controller used with the sensor.

6.3.1 Thermostats

A thermostat is a combined sensor and on-off controller. The bimetal or fluid-filled system senses temperature changes and switches contacts. The sensor may be inside a thermostat housing or extended by a capillary tube for remote sensing. Enclosure and materials should be suitable for the environment. Thermostats should be inspected, calibrated, and mechanically operated on a scheduled basis.

6.3.2 Thermocouple

Thermocouples sense temperature and generate a millivolt signal, proportional to the temperature (ANSI MC96.1-1982 [B1]).

Copyright © 2000 IEEE. All rights reserved.
Copyright The Institute of Electrical and Electronics Engineers, Inc.
Provided by IHS under license with IEEE
No reproduction or networking permitted without license from IHS
Not for Resale

6.3.3 Thermistor

Thermistors sense temperature and change resistance very rapidly in the temperature control range. The change of resistance can be either positive or negative with an increase of temperature (EIA 309-1965 [B9]).

6.3.4 Resistance temperature detector (RTD)

Change of resistance of an RTD is uniform over a broad temperature range. Resistance increases as temperature increases. To improve accuracy, three leads are used to compensate for the lead-wire loop resistance and changes in lead resistance with a change in ambient temperature.

6.4 Wiring considerations

Electrical noise on signal wiring is a common cause of problems with some temperature control systems.

Consideration should be given to spacing sensor wiring away from power wiring; using twisted, shielded, or twisted/shielded cable; and using separate ferromagnetic raceways for sensor wiring. It is recommended that the cable shield be grounded at the instrument only.

6.5 Special control considerations

All heating systems covered in this recommended practice can be designed to heat the system rapidly. The sensors and controllers used should be able to respond quickly to temperature excursions to prevent temperature overruns.

Backup temperature control should be applied to prevent overtemperature in case of control failure. For this backup protection, an entirely separate system is recommended, including sensors, controllers, and power interrupting devices such as a shunt-trip circuit breaker or a magnetic contactor. This is especially important when saturable core reactors or SCRs are the primary control device, or when the heater is located in a hazardous (classified) location where the runaway temperature may exceed 80% of the lowest ignition temperature of the flammables in the area.

6.6 Control specifications

Each respective clause of this recommended practice details specifications required for the type of heating system used. The heating system vendor will normally recommend control and monitoring component specifications to meet the required heating system performance. General specifications for control and monitoring should include the following:

6.6.1 Controller location

Environmental conditions, such as maximum and minimum ambient temperature, indoor or outdoor location, routine hosing, solar heating, corrosives, and classification of the area with a description of hazardous substances, should be considered.

6.6.2 Accessibility

Control and monitoring equipment can be floor- or wall-mounted, have front or back access, and have a wiring entrance at the top, the bottom, or the side.

Copyright © 2000 IEEE. All rights reserved.

Copyright The Institute of Electrical and Electronics Engineers, Inc.
Provided by IHS under license with IEEE
No reproduction or networking permitted without license from IHS
Not for Resale

6.6.3 Electrical

Consideration should be given to available supply voltages and capacity interlocks; local or remote operation and indication; type of indicators desired (lights, meters, alarms, etc.); and quantity, type, and location of additional temperature monitoring.

6.6.4 Remote monitoring

Controllers that can be monitored and tested for proper operation from a remote location, such as a control room, should be considered when there are a large number of electrically heated pipelines or vessels dispersed over a large area.

7. Heating system—General

7.1 Introduction

These heating systems are composed of many components. Failure of any component to be designed, installed, or maintained as specified can result in failure of the system to function properly. To obtain a successful installation of any of these systems requires coordination and cooperation among piping, insulation, electrical, and support designers, purchasers, fabricators, and erectors, at all stages of a project.

7.2 Categories

Heating systems covered in this recommended practice can be divided into five categories.

7.2.1 Solidification prevention

Systems may be used to prevent the fluid in a line or a vessel from solidifying. Many materials handled in industry require this protection. These include water, aqueous solutions, heavy fuel oil, pitch, asphalt, metals, sulfur, and other chemicals. The heating system compensates for the heat losses from the pipeline in order to maintain the temperature of the contents above the solidification point.

7.2.2 Viscosity maintenance

Systems may be used to maintain viscosity of a fluid in a pipeline or a vessel. Viscous materials are generally heated to achieve optimum pump efficiency and pipeline sizes. Usually these materials are preheated to a temperature that provides the desired viscosity and pumped to their destination through heated pipelines designed to maintain that temperature.

7.2.3 Process heating

Systems may be used to maintain the temperature of fluids when process parameters require it. Systems may also be used to raise the temperature of process fluids flowing in the pipeline or the vessel, but they will require increased heat input capacity.

7.2.4 Condensation prevention

Systems may be used to prevent gaseous materials from condensing. Some gases will condense at low temperature and require heating to maintain their gaseous state during transportation. If pressure is reduced, increased heat input capacity may be required.

Copyright © 2000 IEEE. All rights reserved.
Copyright The Institute of Electrical and Electronics Engineers, Inc.
Provided by IHS under license with IEEE
No reproduction or networking permitted without license from IHS
Not for Resale

7.2.5 Remelting solidified fluids

Systems may be used to remelt solidified fluids. Some heating applications do not supply heat during pumping, but only supply heat to remelt line contents and bring them up to temperature prior to pumping. A typical example is an infrequently used loading or unloading line.

7.3 Selection criteria

This recommended practice covers only electrical impedance, induction, and skin-effect heating systems.

All three of these methods result in electrical currents flowing in the wall of the pipeline, the vessel, or the ferromagnetic envelope attached to the pipeline or the vessel. Impedance and induction heating require that the pipeline or the vessel itself be metallic. Skin effect heating requires that the envelope attached to the pipeline or the vessel be ferromagnetic material.

7.3.1 Impedance heating systems

Impedance heating systems introduce low-voltage ac to a section of the pipeline or the vessel to be heated and return the current through a cable. The wall of the current-carrying pipeline or vessel becomes the heating element. The return cable that completes the circuit, when it is laid parallel and adjacent to the pipeline or the vessel wall, creates a proximity effect. The skin effect and hysteresis losses especially enhance heating for ferromagnetic materials. Reasons for selecting impedance heating systems are detailed in Clause 8 of this recommended practice. Table 6 lists the limitations and advantages of impedance heating.

7.3.2 Induction heating systems

Induction heating, as used for pipeline or vessel heating, involves the use of electrically conductive coils encircling and electrically isolated from the pipeline or the vessel. Alternating voltage is applied to the coils, generating a rapidly changing magnetic field that induces hysteresis and eddy-current losses in the pipeline or the vessel walls. Reasons for selecting induction heating systems are detailed in Clause 9 of this recommended practice. Table 2 lists the limitations and advantages of induction heating.

7.3.3 Skin-effect heating systems

In skin-effect heating systems, the heat is generated in a small ferromagnetic envelope, containing the power supply conductor, attached to the pipeline or the vessel. Reasons for selecting skin-effect heating systems are detailed in Clause 11 of this recommended practice. Table 2 lists the limitations and advantages of skin-effect heating.

7.4 Design guidelines and considerations

After establishing which lines in a project will require heating, establishment of certain design parameters is required to evaluate the available systems. These are described in 7.4.1 through 7.4.5.

7.4.1 Material characteristics

Characteristics of materials in a pipeline must be known. These include density, specific heat, heat of vaporization, heat of fusion, thermal and electrical conductivity, and pour point.

7.4.2 Temperature requirements

Temperature requirements must be determined. These include process temperature to be maintained, minimum/maximum process temperature allowed, and minimum/maximum design ambient temperature conditions. If heat up of material is required, the time available to heat a cooled line to process temperature, initial and final product temperature desired, flow rate and direction, and whether operation of the pipeline is continuous or intermittent should be established.

Copyright © 2000 IEEE. All rights reserved.

Copyright The Institute of Electrical and Electronics Engineers, Inc.
Provided by IHS under license with IEEE
No reproduction or networking permitted without license from IHS
Not for Resale

7.4.3 Piping information

Piping information should include length of piping, diameter, material, schedule, insulation material, weather barrier material, insulation thickness and thermal conductivity, and maximum allowable pipe temperature.

7.4.4 Installation information

Installation information should include location of piping, indoor or outdoor, above or below ground, type of pipe joints, method of pipe support, location of water table (if below ground), design wind velocity, and hazardous classification and corrosives in the environment for location of heating system, power supply, and control equipment.

Table 6—General characteristics of induction, impedance, and skin-effect heating systems

Parameters	Induction heating	Impedance heating	Skin effect heating
Uniformity of heating	Fair	Excellent	Very good
System efficiency	Fair	Good	Excellent
System power factor	Poor	Moderate	High
Usual application	Short pipelines or vessels	Moderate pipelines	Moderate to long pipelines or vessels
Maximum maintenance temperatures	>649 °C	>649 °C	>260 °C
Hazardous areas	Yes	Yes	Yes
Distance between power supplies	Short	Moderate	Long
Supports	Isolated supports recommended	Isolated supports required	Isolated supports recommended
Magnetic isolation required	Yes	Yes	No
Oversized insulation required	No	No	Yes, or notching
Power density available	High	High	Moderate
Voltage on pipe	Low	Low	None
Metallic pipe required	Yes	Yes	No
Ferromagnetic tube required	No	No	Yes, for heat tube

7.4.4.1 Classified areas

Where equipment is installed in a classified area, the class, division or zone, group, and minimum ignition temperature should be specified. As an alternative to ignition temperature, the appropriate identification number listed in Table 500-5(d) or Table 505-10(b) in National Electric Code® (NEC®) NFPA 70-1999, or an equivalent standard, may be specified. The maximum runaway sheath/pipe temperature must be calculated in accordance with Clause 6, IEEE Std 515-1997 [B16].

Copyright © 2000 IEEE. All rights reserved.
Copyright The Institute of Electrical and Electronics Engineers, Inc.
Provided by IHS under license with IEEE
No reproduction or networking permitted without license from IHS
Not for Resale

7.4.5 Electrical supply system

Characteristics of the electrical supply system should be determined, including locations of power control centers, voltages, phase, frequency, continuous capacity, and short-circuit capacity available.

7.4.6 Cooling water

Source and quality of cooling water should be known if high-watt density induction coils are to be considered.

7.4.7 Adequacy and safety

Design for all three of these types of heating systems is usually handled as a part of a complete system furnished by the vendor of the system who assumes responsibility for the adequacy and safety of the system.

7.4.8 User review

All three systems use electric power to heat metallic pipes or vessels. The user of any of these systems should review the entire system, both mechanically and electrically, to assure proper equipment use and personnel safety.

Although it is impossible to recommend guidelines that cover all possible conditions, some common considerations are as follows:

a) Maximum surface temperature of the thermal insulation or the weather barrier; see 5.4.1.

b) Grounding and use of ground fault circuit interrupters for personnel and/or equipment protection. An electrical failure that results in arcing may cause physical damage to the pipeline or the vessel.

c) Pipelines or vessels being electrically heated will expand and contract and may cause damage to connections, supports, thermal or electrical insulation, or devices near or attached to the pipe or the vessel. The resulting physical damage could rupture the pipeline or the vessel and expose electrically or thermally hot elements. Such exposure could result in arcing, burning, or a potential shock hazard to personnel.

7.5 Power systems

7.5.1 Higher frequency power sources

All three systems use power at a normal power frequency. If control by variable frequency, or higher frequency for thin-walled vessels, is necessary for induction heating, then rotating or static converters must be supplied. All system loads are single-phase, but where loads can be divided, they can be connected three-phase, or a Scott T-connected transformer can be used to produce two-phase from three-phase. A tripler circuit can be employed to supply single-phase, 180 Hz loads from three-phase, 60 Hz lines.

7.5.2 Special transformers

Voltage requirements depend upon the characteristics of each individual heating system. In most systems, transformers with special output voltages are required.

7.5.3 Power quality

Except when analog power controls are used, the power distribution system serving these heating systems requires no special considerations if they have been designed and installed in accordance with NEC and IEEE Std 141-1986, or an equivalent standard. If single-phase loads are not converted to three-phase loads,

Copyright © 2000 IEEE. All rights reserved.

Copyright The Institute of Electrical and Electronics Engineers, Inc.
Provided by IHS under license with IEEE
No reproduction or networking permitted without license from IHS
Not for Resale

the effects of the unbalance on the overall power system should be checked. The need for the addition of power-factor correcting capacitors should be evaluated.

7.6 Receiving and storage

All parts should be checked when received to assure that they are complete and in accordance with specifications. All electrical and control equipment should be stored in a clean, dry location with all boxes closed and preferably sealed. If weather-tight equipment designed for outdoor operation is stored outdoors, all doors should be kept closed and all entrances sealed or plugged. If space heaters are specified, they should be energized from a temporary source after assuring that no flammable material has been shipped inside the enclosures. Exposed insulation or preinsulated piping systems should be protected from the weather as recommended by the suppliers. All manufacturer's instructions should be followed for the handling and storage of equipment.

7.7 Installation

7.7.1 Conformance to standards

All electrical equipment and installations should conform to NEC, or an equivalent standard.

7.7.2 Installation monitoring

All manufacturer's drawings and specifications should be followed. Unless the system purchaser has complete knowledge of the heating system, it is recommended that a factory representative periodically monitor construction, installation, and commissioning of the system.

7.7.3 Test points

Vessel or pipeline tests, internal cleaning, and other tests required to ensure the integrity of the system, and installation of all support anchoring, guiding, and (where possible) the thermal insulation systems, should be complete before proceeding with the installation of the portions of the heating system that are attached to the pipeline or the vessel.

7.7.4 Warning signs/labels

Each feeder and junction box should be identified and tagged. Weather-resistant warning signs should be placed on the pipeline or the vessel to indicate it is electrically heated in accordance with NEC, Article 427-13, or an equivalent standard.

7.8 Testing

7.8.1 Before commissioning

Testing to ascertain that all components are designed and installed as specified is critical to the successful commissioning and safety of any electric heating system. Power transformers and all cables and wires should have an insulation resistance check. Each voltage tap setting should be checked for proper output voltage. All pipelines and vessels should be checked to ensure that they are actually grounded at their designated ground point and nowhere else. All bolted electric connections should be checked for proper torquing of bolts. For impedance and induction heating systems, all temperature sensors should be checked to ensure that they are properly isolated. All thermal insulation and weather barriers should be checked to ensure that they are the specified material, are properly installed, and are adequately sealed to prevent entry of moisture.

Copyright © 2000 IEEE. All rights reserved.
Copyright The Institute of Electrical and Electronics Engineers, Inc.
Provided by IHS under license with IEEE
No reproduction or networking permitted without license from IHS
Not for Resale

7.8.2 Test documentation

After the system has been tested and final adjustments made, voltage, current, temperature controller settings, etc., should be recorded. Test results should be documented for use by maintenance and operations.

7.9 Operations

A process flow diagram showing configuration of the system, location and settings of controls, currents, temperatures, etc., for normal operations should be prepared and made a part of the operating instructions. These instructions should contain all the heating system operating information as furnished by the equipment manufacturer. Manufacturer's instructions should be followed.

7.10 Maintenance

7.10.1 General maintenance requirements

Each of these heating systems requires relatively little maintenance, if properly installed. Successful and dependable operation of any heating system requires periodic maintenance and an adequate stock of spare parts. Replacement parts should be as recommended by the manufacturer.

7.10.2 Maintenance program

A requirement for a good maintenance program is to have qualified maintenance personnel and sufficient documentation and records to administer the program. Maintenance personnel should have a thorough knowledge of the equipment and the ability to locate defects expediently and repair or replace the components. Training programs are helpful. A maintenance checklist and time schedule should be set up to include visual and operational checks. A safety program and guidelines should be developed. A good preventive maintenance program should be established and coordinated with operations in scheduling downtimes.

7.10.3 Maintenance checklist

A maintenance checklist should include the following: temperature settings, transformers and pipeline vessel connections, meters, control equipment, and insulation condition. Visual checks on the pipeline or the vessel connection cables and equipment should be done at regular intervals. Periodic operational checks and calibration of equipment during a shutdown is an effective preventive maintenance tool. Because electric connections on the pipeline or the vessel are critical, an infrared scan during operation of a heating system can be a useful tool to help determine if a hot (loose) connection exists. These checks should be scheduled at regular intervals, depending upon their usage and the importance of the heating system for plant operation.

7.10.4 Record keeping

Keeping adequate, up-to-date records of heating systems is an important aspect of a good maintenance program.

8. Impedance heating

8.1 Introduction

In an impedance heating system, a low ac voltage is applied directly across a length of pipe, which results in a high current flow. This provides I^2R_{ac} heating because of the resistance of the pipe. The return cable (that makes the circuit complete) is run parallel to the pipe and in close proximity to it. A magnetic flux is produced between the cable and the pipe and causes eddy currents and hysteresis, which provides additional heat in the pipe and thus its name, impedance heating. If the pipe is magnetic, these effects will be enhanced. An impedance heating system consists of the secondary of the transformer, cables, and the pipe.

Copyright © 2000 IEEE. All rights reserved.

Copyright The Institute of Electrical and Electronics Engineers, Inc.
Provided by IHS under license with IEEE
No reproduction or networking permitted without license from IHS
Not for Resale

8.2 Selection criteria

8.2.1 General

The entire wall of the pipe is heated uniformly because the current is actually flowing through the pipe. Localized temperature variations are minimized.

8.2.2 Existing pipelines

Impedance heating can frequently be installed on existing piping without removing the thermal insulation, except for the location of the temperature sensors, the electric connections to the pipe, and where electrical isolation is required. If the pipeline is of different sizes, different heating systems and insulation thicknesses may be required.

8.2.3 Typical system

The typical system consists of an analog controller or a contactor, a temperature controller, and a low-voltage, high-current transformer. Troubleshooting and maintenance are easy because the system can be completely seen, allowing for visual inspection.

8.2.4 Rapid heat up

Since there is no thermal resistance slowing heat transfer to the wall, rapid heat transfer rates are possible. The pipeline is the heating element; thus, heating element failure is minimized.

8.2.5 High temperature applications

Impedance heating can be used on high-temperature applications. Maximum temperatures are limited by what the pipe can withstand. Temperatures up to 6500 °C or higher have been used successfully. If power is lost or a freeze-up occurs, high input power may be applied to allow for a quick thaw out, if provided for in the initial design.

8.3 Design guidelines and considerations

8.3.1 Impedance heated pipeline

The pipeline must be an electrical conductor, either magnetic or nonmagnetic. It may be long (hundreds of meters) or very short (1–2 m). To maintain a consistent pipe temperature, the diameter, wall thickness, and metallurgy of the pipe should be uniform for each circuit, but they may vary for adjoining circuits. Welds should be in compliance with the appropriate ANSI, ASME B-31 series, or an equivalent standard. The only limitations are voltage and the ability to transmit circuit currents. The pipeline may be indoors or outdoors, horizontal or vertical.

The pipeline is normally thermally insulated, and power cables run on the outside of the insulation. The pipeline may be heated to very high temperatures with high currents (hundreds of amperes or more).

Terminal connectors must be welded to the pipeline for electrical connections. Terminal connectors should be fabricated of material to limit galvanic corrosion. Connectors should be sized to minimize voltage drop and ensure that the interface with the secondary cables does not exceed the cable temperature limitations. Terminals should be designed to minimize heat loss from the pipeline where attached. Dissimilar metals at connections require special consideration. The pipeline must be electrically isolated from supports, anchors, temperature sensors, and other pipeline connections through the use of the thermal insulation system, isolating guides, isolating supports, isolating anchors, and isolating flanges.

Copyright © 2000 IEEE. All rights reserved.
Copyright The Institute of Electrical and Electronics Engineers, Inc.
Provided by IHS under license with IEEE
No reproduction or networking permitted without license from IHS
Not for Resale

8.3.2 Special control considerations

An impedance heating system can be controlled by use of a temperature controller with an ungrounded temperature sensor or thermostat located on the pipeline. The controller is preferred on the primary side of the transformer due to high secondary currents.

When a midpoint feed system is used (see 8.3.4), monitoring currents on each side is recommended to detect unbalanced currents. Temperature monitoring on both sides of the midpoint of the pipeline is recommended.

8.3.3 Impedance heating electrical system

8.3.3.1 Transformers

Transformers shall comply with UL 1561-1999 [B34] or equivalent. The transformer used for the impedance heating system is generally a single-phase unit with a low-voltage, high-current secondary, and it may have voltage taps on the primary to adjust the output of the secondary. The transformer primary voltage is specified to match the user's system, while the secondary is limited to 30 V maximum unless ground fault protection is provided in accordance with Article 427-27 of NEC, or an equivalent standard. Where center tap secondaries or dual winding secondaries are connected in a three-wire arrangement to the impedance-heated pipeline, the secondary voltage is the sum of the individual winding voltages. The transformer should be sized for actual calculated load, including service factor, and should be a heavy-duty type for lasting service. The compartments for primary and secondary connections should be large enough to ensure proper terminations. The transformer shall have a dual winding with a grounded shield between the primary and secondary windings in accordance with Article 427-26 of NEC, or an equivalent standard.

8.3.3.2 Cables

The cables from the secondary of the transformer to the pipeline should be rated at least 100% of the maximum load current in accordance with Article 427-30 of NEC, or an equivalent standard. Cables should be sized to minimize voltage drop and power loss external of the thermal insulation. The secondary cable should meet the temperature, ampacity, and service requirements of the operating environment. Cables shall be sunlight resistant per UL-1581-1997 or equivalent, meet the flame test of IEEE-1202-1991 or equivalent, and should not be located in a position where the cable is subject to mechanical abuse. Where the cable is subject to mechanical abuse, suitable guarding should be provided. In a midpoint feed or multicable system, the cables should be of the same length and size to balance the load currents. The cable connections should be torqued tightly and evenly. Alternately, cable connections may be brazed or fused. Cable connections should be checked periodically to guard against high-resistance connections. The cables should be run as close as practical to the outside of the insulation of the pipe, and there should not be any magnetic material between the cables and the pipeline, such as hangers, supports, or jacketing, in which currents can be induced.

8.3.3.3 System protection

The connections, secondary cables, and transformers are an integral part of the impedance heating system and shall be protected in accordance with Article 427 of NEC, or an equivalent standard.

8.3.4 Grounding and isolation

There are basically three types of impedance heating systems: the midpoint (Figure 5), the end feed (Figure 6), and the dual-line end feed (Figure 7). The dual-line end feed system can be used where there is parallel supply and return piping of the same size, which is all or part of a common flow circuit. There are various ways to ground and isolate these heating systems (see Table 7). The ground connection must be connected independently at the pipeline or the transformer secondary terminals and not at both places. The ground connection should be independent of the secondary conductor connection. Conductivity,

Copyright © 2000 IEEE. All rights reserved.

Copyright The Institute of Electrical and Electronics Engineers, Inc.
Provided by IHS under license with IEEE
No reproduction or networking permitted without license from IHS
Not for Resale

temperature, and corrosive nature of the fluid should be taken into account when selecting the type of isolating flanges. Branch piping and components must be electrically isolated from the pipeline to prevent grounds. (See Table 7 for the meaning of letters A, B, C, and D in Figure 5, Figure 6, and Figure 7.)

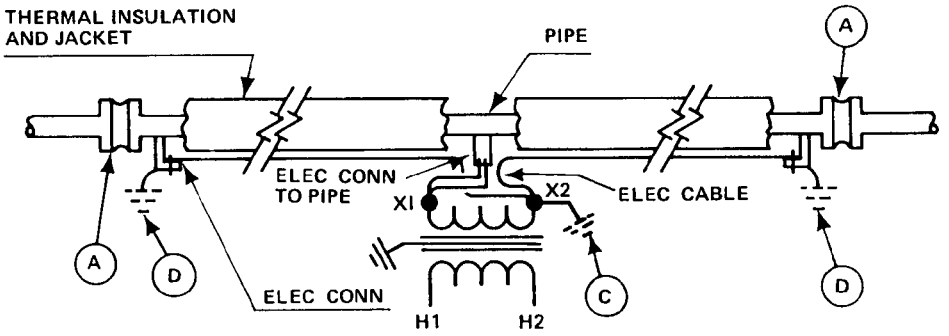

Figure 5—Midpoint feed system

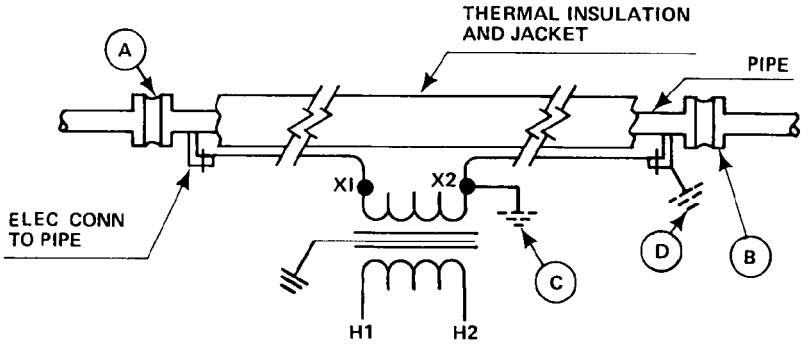

Figure 6—End feed system

Copyright © 2000 IEEE. All rights reserved.
Copyright The Institute of Electrical and Electronics Engineers, Inc.
Provided by IHS under license with IEEE
No reproduction or networking permitted without license from IHS
Not for Resale

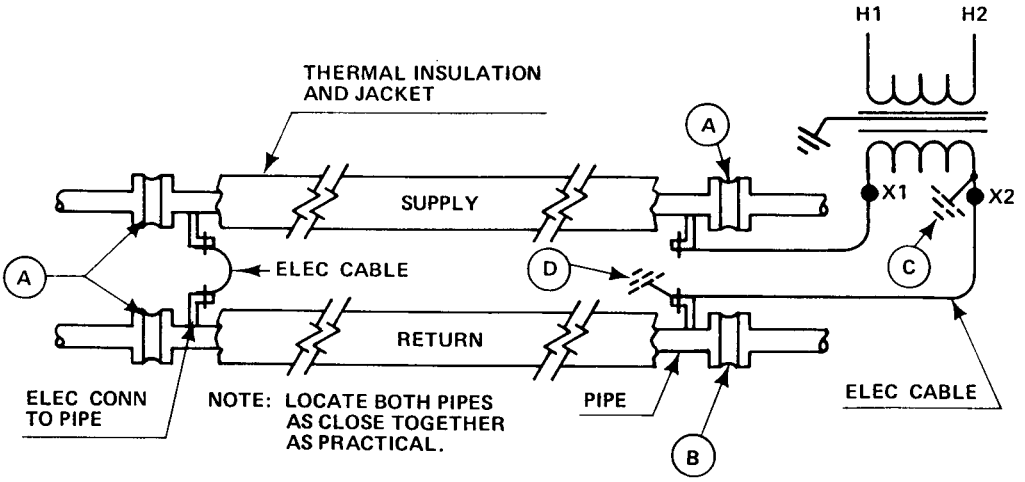

Figure 7—Dual-line end feed system

Table 7—Grounding and isolation

Figure	Type of system	Product in pipeline conductive	System volts	Grounding		Isolation flange required		Ground fault circuit interrupter required
				C[a]	D[b]	A[a]	B[a]	
5	Midpoint	No	0–30	No	No	No	N/A	No
5	Midpoint	No	0–30	Yes	No	Yes	N/A	No
5	Midpoint	No	0–30	No	Yes	No	N/A	No
5	Midpoint	No	30–80	Yes[c]	No	Yes	N/A	Yes
5	Midpoint	No	30–80	No	Yes[c]	No	N/A	Yes
5	Midpoint	Yes	0–30	No	No	No	N/A	No
5	Midpoint	Yes	0–30	No	Yes	No	N/A	No
5	Midpoint	Yes	30–80	No	Yes	No	N/A	Yes
6	End Feed	No	0–30	No	No	Yes	Yes	No
6	End Feed	No	0–30	Yes	No	Yes	Yes	No
6	End Feed	No	0–30	No	Yes	Yes	No	No
6	End Feed	No	30–80	Yes[c]	No	Yes	Yes	Yes
6	End Feed	No	30–80	No	Yes[c]	Yes	No	Yes
7	Dual-Line	No	0–30	No	No	Yes	Yes	No
7	Dual-Line	No	0–30	Yes	No	Yes	Yes	No
7	Dual-Line	No	0–30	No	Yes	Yes	No	No
7	Dual-Line	No	30–80	Yes	No	Yes	Yes	Yes
7	Dual-Line	No	30–80	No	Yes[c]	Yes	No	Yes

[a]See Figure 5, Figure 6, and Figure 7 for location.
[b]There will be ground circulation currents unless isolation flanges are used.
[c]Grounding required by Article 427-29 of NEC.

Copyright © 2000 IEEE. All rights reserved.

Copyright The Institute of Electrical and Electronics Engineers, Inc.
Provided by IHS under license with IEEE
No reproduction or networking permitted without license from IHS
Not for Resale

8.3.4.1 Temperature sensor isolation

The temperature sensing devices that are located on the pipeline must be of the ungrounded type and must be electrically isolated from the pipe to prevent unwanted grounds on the pipeline or unwanted voltage imposed on the temperature controller.

8.3.5 Safety considerations

8.3.5.1 Ground-fault protection

Equipment ground-fault protection is not required if transformer secondary voltage is less than 30 V. If the transformer secondary voltage is greater than 30 V, but never more than 80 V, requirements include both of the following:

a) The branch circuit protection shall be capable of interrupting ground faults. This should be accomplished by a ground-fault equipment protective device with an adjustable trip rating. The trip level for this protective device is typically set above any inherent leakage characteristic of the heating system as specified by the manufacturer during commissioning.

b) Conditions of maintenance and service ensure that only qualified persons will service and/or have access to the heating system.

The transformer secondary voltage shall never exceed 80 V on any tap.

NOTE—Any overcurrent device that de-energizes a faulted circuit to ground protects personnel from exposure to electrical shock and burns. It was the intent of NEC Code Making Panel 12 that protection be used to de-energize a circuit or portion thereof within an established period of time when a current to ground exceeds some predetermined value that is less than that required to operate the overcurrent protection device of the supply circuit. The setting of the protective device should be the minimum that does not cause nuisance tripping; see NFPA-NEC-TCD-1983 [B30].

8.3.5.2 External surfaces

All accessible external surfaces of the pipeline being heated should be physically guarded, isolated, or thermally insulated (with weatherproof jacket for outdoor installations), to protect against contact by personnel in accordance with Article 427-25 of ANSI/ NFPA 70-1999, or an equivalent standard.

8.3.5.3 Secondary cables

Where secondary cables are not strapped to the pipeline and are subject to possible physical damage, the cables should be mechanically protected. The normal 600 V class of electrical insulation on secondary cables is adequate to protect against contact by personnel. Where secondary cables are strapped to the pipe, use of nonmetallic strapping will avoid damage to the cables by abrasion.

8.3.5.4 Piping consistency

Failure to maintain consistency of the pipe diameter, wall thickness, and metallurgy will cause irregular heating and inconsistent pipe temperature.

8.4 Specification

The following applies to the impedance heated pipeline: A layout drawing of the pipeline is required. The properties of the piping material should be described (including resistivity versus temperature, temperature coefficient of expansion, magnetic or nonmagnetic, and Curie temperature). The electrical conductivity of the fluid in the pipe is also of importance (see Clause 7 for more information).

Copyright © 2000 IEEE. All rights reserved.
Copyright The Institute of Electrical and Electronics Engineers, Inc.
Provided by IHS under license with IEEE
No reproduction or networking permitted without license from IHS
Not for Resale

8.5 Installation

8.5.1 Equipment Location

The power transformer should be located as close as practical to the pipeline being heated. On a midpoint feed system, it should be located at the midpoint. This is necessary to minimize cable voltage drop and cost and to maximize the efficiency of the system. The temperature controller and associated control relays, alarms, etc., should be protected from the elements.

8.5.2 Piping and Insulation

Since the pipe is part of the heating system, be sure all pipe, fittings, insulated pipe supports, and terminal connectors are installed according to the manufacturer's instructions and drawings. Where piping runs through walls or floors, sufficient clearance for the insulation and cable should be provided. Make sure no magnetic metal is between the cable and pipe. The pipe should be electrically isolated and should be grounded only where shown on the drawings.

The specified type of insulation should be used and properly applied. When flanges are used in the pipeline heating circuit, the properly sized jumper cables, with lugs or copper straps, should be used to ensure current flow across the flanges. All flanges and other heat sinks must be well insulated to prevent excessive heat loss. Do not use magnetic wire or straps to band insulation. If jacketing is used, it shall be nonmagnetic. To ensure electrical isolation, keep metallic jackets at least 50 mm away from any surrounding metal parts such as cable connectors, anchors, supports, flanges, valves, drains, etc.

8.5.3 Terminal Connectors

8.5.3.1 Power connections

Electric power connections are made to the pipe through terminal connectors welded to the pipe. Locations should be as shown on the drawings. If a midpoint feed system is used, the midpoint terminal connector location is critical and should be determined as follows:

— Weld the end terminal as shown on the vendor supplied drawings and connect to one side (X2) of the transformer secondary.

— Physically measure the installed pipeline length and divide by two to find the midpoint. A pipe saddle or clamp may then be installed at this physical midpoint and connected to the cables from the other side of the transformer secondary (X1). A conducting grease between the saddle and the pipe may be used to lower contact resistance.

— A low voltage should then be applied, and currents in each direction, and ground currents in case of grounded systems, should be checked. Move the saddle in the direction of the lower current reading until both currents are approximately equal (within 5% of each other) and ground currents are minimized. After the electric midpoint is located, remove the saddle, clean the pipe, and then weld the midpoint terminal connector(s).

8.5.3.2 Terminal connectors

The terminal connectors should be as recommended by the supplier and installed on the bottom of the pipe to prevent water accumulation and overheating. The terminal connector should extend beyond the insulation. If bolted-on cable connectors are used, the diameter of the holes in the connector and the terminal connector should be the same. For temperatures below 90 °C, exposed portions of the terminal connector should be covered with a weatherproof tape or other means for personnel protection. Higher temperature installations, where exposed surfaces could exceed 60 °C, should be physically protected. Qualified vendors should supply or recommend terminal protective procedures or devices to protect personnel and ensure connection integrity. The devices should be nonmagnetic and sturdy enough to secure the cables while providing room to make connections.

Copyright © 2000 IEEE. All rights reserved.

Copyright The Institute of Electrical and Electronics Engineers, Inc.
Provided by IHS under license with IEEE
No reproduction or networking permitted without license from IHS
Not for Resale

8.5.3.3 Connector welding

The welding method should be compatible with the pipeline and the connector materials used, and a qualified welder should do the actual welding in compliance with appropriate ANSI, ASME B-31 series, or equivalent standard.

8.5.4 Cable

The power cable from the secondary of the transformer to the pipeline should be of the type, size, and length as shown on the drawings and specifications. The power cable must be run parallel and in close proximity to the pipeline; otherwise, the actual power delivered to the pipe will be less than designed. After the pipeline has been insulated, the cable should be strapped to the outside of the pipeline insulation with nonmagnetic strapping. If cables are paralleled, they should be of the same size and length. Proper installation of the cables, connectors, and welded pipe terminal connectors are critical to the overall operation of the impedance heating system. Parallel cables should be distributed around the pipe to equalize currents in the pipe.

8.5.5 General

The installation of an impedance heating system requires coordination among the piping, insulation, and the electrical disciplines to ensure a timely construction schedule and a proper installation. All manufacturer's drawings and specifications should be followed.

8.6 Testing

Review instructions in 7.8 for additional information.

8.6.1 Grounding

Check the pipeline to see that it is grounded at the points designated on the drawings and nowhere else and that each connection is tight. Check the temperature sensors on the pipeline to make sure they are ungrounded. If ground detectors are supplied, no grounds should be indicated. Note that a midpoint, grounded system may have inherent ground currents caused by system imbalances. The vendor stated secondary current shall not be exceeded by imbalances.

8.6.2 Connections

Visually inspect all power connections, especially on the transformer secondary and pipe terminal connectors, for tightness and clearances. Connections using threaded fasteners should be torqued to a value consistent with the diameter, number of threads per inch, and tensile strength of the fastener. After the system has been in operation, periodically check the connections for tightness. Use of disc spring (Belleville) washers assists in maintaining tension in bolted assemblies. Verify all control connections, and make sure the wiring is in accordance with the drawings.

8.6.3 Control panel

An examination of the enclosure, panel components, and panel construction shall be conducted in accordance with UL 508-1993 [B33] or equivalent.

8.6.4 Flange jumpers

Where flanged rather than welded pipe is used, flange connections and/or jumpers must be used. Torquing shall be in compliance with appropriate ASTM, API, ASME, or equivalent standards. Flange jumper design should minimize excessive voltage drop and surface temperature.

Copyright © 2000 IEEE. All rights reserved.
Copyright The Institute of Electrical and Electronics Engineers, Inc.
Provided by IHS under license with IEEE
No reproduction or networking permitted without license from IHS
Not for Resale

8.6.5 Start-Up

Review and follow the manufacturer's instructions on the impedance heating system at start-up time. A factory-trained representative should assist in the initial startup, if required.

8.6.5.1 Commissioning

Conduct test to determine the maximum current input and applied voltage of the impedance heating circuit. The actual rating of any given installation is adjusted at the site to attain the required heating effect consistent with the vendor stated design, not to exceed the ratings of the individual components used.

8.7 Operations

See Clause 6 and Clause 7 for information.

8.8 Maintenance

See 7.10 for information.

8.9 Special considerations

8.9.1 Corrosive areas

All components of the impedance heating system should be examined to verify compatibility with corrosive elements that may be encountered. Particular attention should be given to the materials used for the pipe terminal connectors, since these items are critical for proper operation, and deterioration can be speeded up in corrosive atmospheres.

8.9.2 Change in resistance

Most metals undergo a change in resistance as the temperature changes. This must be taken into consideration when sizing the power system equipment and its controls.

8.9.3 Curie temperature

The electrical characteristics change when the Curie temperature of the magnetic material is exceeded. The heating above the Curie temperature is basically resistive.

8.9.4 Thermal expansion

The amount of movement due to expansion of the pipeline at elevated temperatures should be taken into account when specifying supports, anchoring, and cable installation.

8.9.5 Supplementary heating

Valves, flanges, pumps, vents, drains, etc., in the pipeline will be areas of high heat loss and low heat generation. Some form of supplementary heating should be considered for these areas.

9. Induction heating of pipelines and vessels

9.1 Introduction

Induction heating is a method of generating heat in a pipeline or vessel wall by inducing eddy currents and hysteresis in the wall from an external ac field. The field is established by a coil, or series of coils, wound

Copyright © 2000 IEEE. All rights reserved.

Copyright The Institute of Electrical and Electronics Engineers, Inc.
Provided by IHS under license with IEEE
No reproduction or networking permitted without license from IHS
Not for Resale

over the pipeline or the vessel and connected across an ac voltage source. The coils do not make physical contact with the pipeline or the vessel.

9.2 Selection criteria

- Induction heating requires no physical contact between the electric heating system and the pipeline or the vessel to be heated. The workpiece can be moving; isolated, as by thermal insulation; or inaccessible, as in a pressurized or vacuum system.
- The heat is generated in the wall of the pipeline or the vessel being heated. Since there is no thermal resistance slowing heat transfer to the wall, rapid heat transfer rates are possible.
- High temperatures, up to the melting point of the metals being heated, are possible.
- The induction coils can be protected from the high temperature of the pipeline or the vessel either by thermal insulation, liquid cooling of the coil, or a combination of both.
- The induction coils may be isolated from the environment in which the pipeline or the vessel is placed in order to protect the coils from corrosion, hazardous vapors, or other undesirable effects of the environment.
- High currents are developed in the wall of the vessel to be heated without requiring a transformer with low-voltage, high-current secondary winding, and high-ampacity connections.
- The heating coil of an induction heater can be installed in a classified environment where it would be impractical to install resistance heaters because of high operating temperatures. Compliance with rules for hazardous (classified) areas in NEC, or an equivalent standard is required.

9.3 Design guidelines and considerations

9.3.1 Pipelines or vessels to be heated

Consideration should be given to the pipeline or the vessel shape, which may be round, square, or irregular. The wall material must be an electrical conductor. Walls of magnetic material may be almost any thickness. To provide a uniform pipe temperature or vessel temperature, the diameter, wall thickness, and metallurgy should be consistent. Where wall thickness or metallurgy varies, deviation in coil spacing, voltage or frequency may be required. See Annex E for restraints on thickness of nonmagnetic materials.

9.3.2 Coil construction

9.3.2.1 Protection from high temperature

More thermal insulation may be required to protect the coil from the pipeline or the vessel wall temperature than would be normally used for energy conservation. Protection of the coil should be balanced against reduction in efficiency as the coil-to-wall distance increases. A liquid-cooled coil can be installed with less insulation and spacing for higher efficiency. Provisions should be made for assuring flow in the coil while it is energized.

9.3.2.2 Magnetic field propagation

Metal around the coil should be kept as far away as possible. Metallic objects less than one-half of a coil length away can cause irregularities in the field and heating pattern. Induced currents in the external metal cause losses that lower the efficiency of the heating system. Metallic paths can be broken and electrically isolated to prevent power loss, or bonded to prevent arcing. Laminated magnetic shunts may be used outside the coil to confine the field and minimize losses.

Copyright © 2000 IEEE. All rights reserved.
Copyright The Institute of Electrical and Electronics Engineers, Inc.
Provided by IHS under license with IEEE
No reproduction or networking permitted without license from IHS
Not for Resale

9.3.2.3 Coil support system

The coil may be wound directly on the pipeline or the vessel thermal insulation or be self-supporting. Epoxy or heat transfer cement can be used on a coil to hold it in position and dissipate heat.

A separate support system, such as shown in Figure 8, can be used to hold the coil in a fixed and predetermined position. If supports are not fastened to the pipeline or the vessel, sections of the pipeline or the vessel can be removed without disassembling the coil.

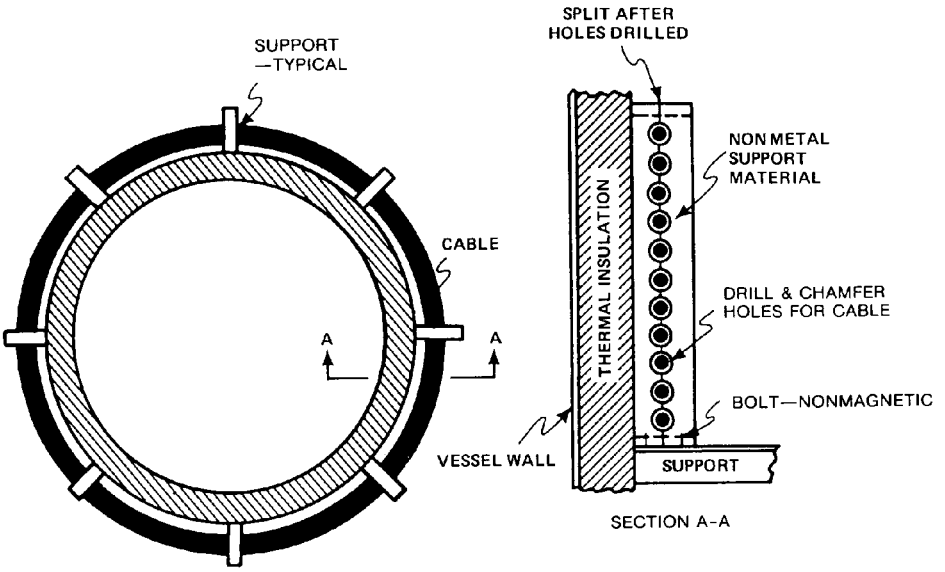

Figure 8—Induction heating coil

9.3.2.4 Conductors for induction heating coils

Conductors may be any low-resistance material, but for 50 Hz or 60 Hz coils, bare or insulated copper or aluminum conductors are normal. The conductors should be extra flexible for ease of winding and unwinding. Conductor insulation should have a correct temperature rating and be able to withstand mechanical abuse. Conductor ampacity should be derated to prevent overheating of the coil. External mechanical protection (nonmetallic jacket, etc.) may be required to protect the coil from mechanical damage. Tubular conductors are used when the application requires liquid cooling.

9.3.3 Induction heating special control considerations

9.3.3.1 Temperature control point

The temperature control point selected should be representative of the temperature of the pipeline or the vessel wall or contents. Irregularities in the wall, coil, or external flux path will cause uneven heating.

9.3.3.2 Electrical noise on the control system

The sensor wiring, where it passes through the induction heating coil, will be subject to a strong magnetic field. The wiring should run normal to the tangent of the coil, as far as possible; see Figure 9. For thermocouple wiring, twisted-pair shielded cable should be used. Filters and barriers can also be used to

Copyright © 2000 IEEE. All rights reserved.

Copyright The Institute of Electrical and Electronics Engineers, Inc.
Provided by IHS under license with IEEE
No reproduction or networking permitted without license from IHS
Not for Resale

increase the signal-to-noise ratio. Wiring to thermistors and RTDs is not as sensitive to noise and should be run in accordance with the manufacturer's instructions.

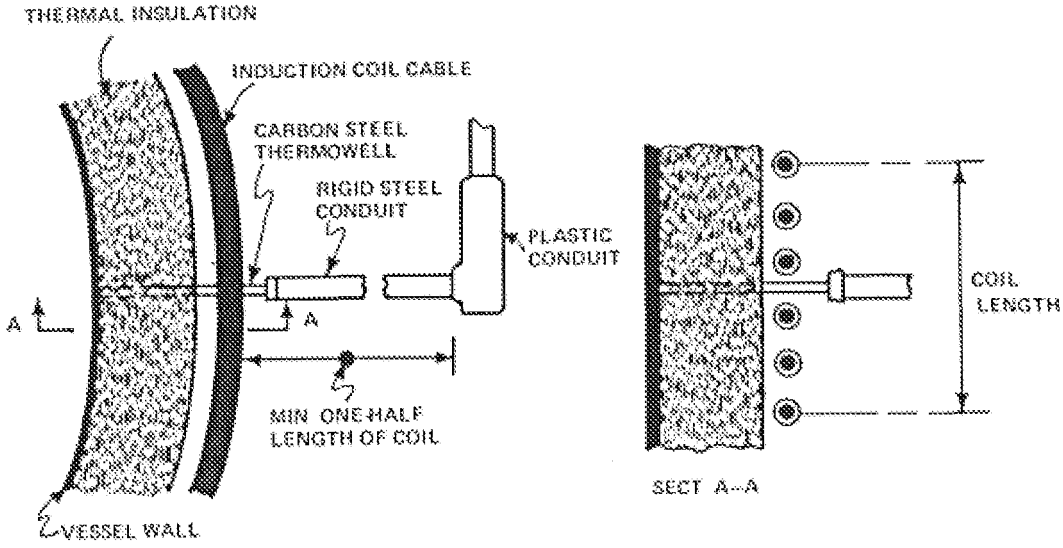

Figure 9—Signal shielding

Ungrounded temperature sensors, with the sheath isolated from ground, should be used to eliminate current in the sensor or sheath.

Where liquid cooling of the coil is used, flow interlocks should be used to deenergize the coil when the flow is interrupted.

9.3.4 Induction heating special power system considerations

See Annex F for further information.

9.3.4.1 Control of power to induction heating coils

9.3.4.1.1 On-off

Contactors should be sized for the high inrush and interrupting currents of the induction coil. If the coil design is wrong, modifications can be made by changing transformer taps or the number of turns in the coil.

9.3.4.1.2 Variable voltage

SCRs should be selected carefully because of the inductive load. They must be the phase-angle-fired type; zero-fired units cannot be used. Soft start and current limit circuits can be used to limit inrush currents, mechanical stresses, and cold start power. If the coil design is wrong, too few turns can be compensated for by automatic voltage reduction.

9.3.4.1.3 Capacitor switching

Capacitors can be switched to make a resonant circuit for the most efficient power transmission.

Switching in additional capacitance causes a leading power factor, raising coil voltage for additional power to the load.

Copyright © 2000 IEEE. All rights reserved.
Copyright The Institute of Electrical and Electronics Engineers, Inc.
Provided by IHS under license with IEEE
No reproduction or networking permitted without license from IHS
Not for Resale

9.3.4.1.4 Variable frequency

Changing the frequency of the power supply varies the impedance of the coil and the effective flux penetration in the vessel wall. Static inverters can be used to vary frequency over a broad range; however, they are expensive.

9.3.4.2 Frequency

9.3.4.2.1 Line frequency

50 Hz or 60 Hz is the simplest and most economical power supply frequency because no equipment is required for frequency conversion. For efficient heating, the pipeline or the vessel outer diameter should be 51 cm or larger and the wall should be of magnetic material; or, if nonmagnetic, the wall should be of minimum thickness as shown in Annex F. Since induction coils are single-phase, this load will unbalance the distribution system.

9.3.4.2.2 Tripler circuit

This circuit converts three-phase line frequency to 150 Hz or 180 Hz single-phase output; see Figure 10. Transformers and capacitors are used for this conversion. The higher frequency broadens the range of nonmagnetic pipelines and vessels that can be inductively heated. The single phase induction coil load is converted to a balanced three-phase load.

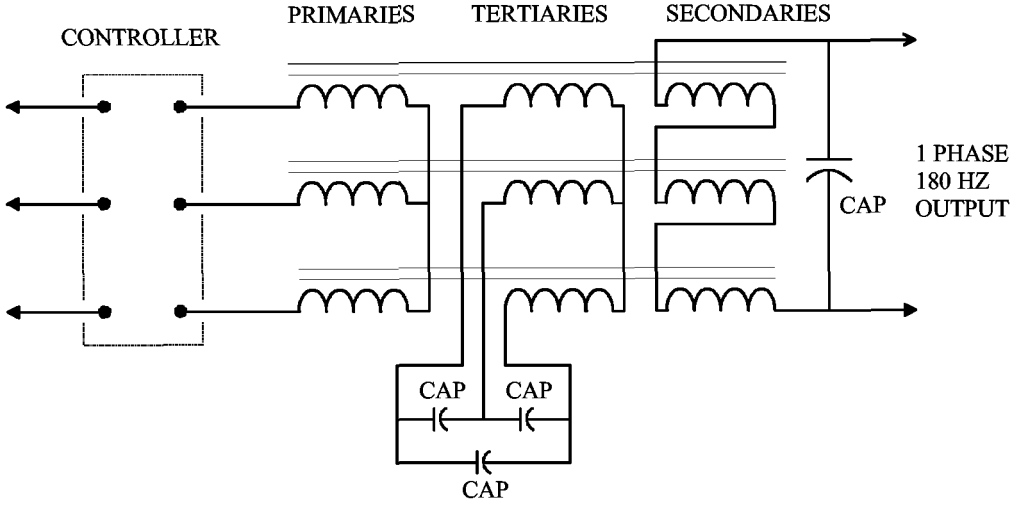

Figure 10—Tripler circuit

9.3.4.2.3 Higher frequencies

Frequencies up to 1000 Hz produced by rotating machines or static inverters, may be required for heating thin-wall nonmagnetic vessels. Even higher frequencies are presently used for heat treating in the metal industry, but they are beyond the scope of this document. Frequencies higher than 60 Hz may cause interference on communication and control circuits.

9.3.4.3 Power factor

Since the coil is an inductive load, the power factor of the coil normally varies from 0.4 to 0.7 lagging. Capacitors are often used to improve the power factor.

Copyright © 2000 IEEE. All rights reserved.

Copyright The Institute of Electrical and Electronics Engineers, Inc.
Provided by IHS under license with IEEE
No reproduction or networking permitted without license from IHS
Not for Resale

9.3.4.3.1 Shunt capacitors

The use of shunt capacitors raises the power factor and minimizes the service ampacity requirement. If the environment is suitable, they can be connected across the coil terminals; otherwise, they can be connected across the secondary of the power control equipment. Because of instantaneous inrush current to capacitors, all devices and conductors should be sized for at least 135% of capacitor full load amperes. Capacitors must be applied on the line side of SCR controllers.

9.3.4.3.2 Series capacitors

The use of series capacitors raises the power factor, minimizes service ampacity, and changes the voltage across the coil. The capacitors should be sized for the full rating of the coil, and the voltage rating should be carefully checked. Means must be provided for draining the stored charge from capacitors when the circuit is de-energized. The coil inductance minimizes instantaneous inrush in this circuit; therefore, SCR controllers may be used on the line side of series capacitors.

9.3.4.4 Balanced Loading

If there is more than one zone, distribute the zones across three phases to balance the load. If the zones are adjacent, there will be flux cancellation between zones, causing a cold area. To minimize this effect, reverse the connections or winding direction so that the flux is 60° out of phase instead of 120°, and overlap zone windings; see Figure 11.

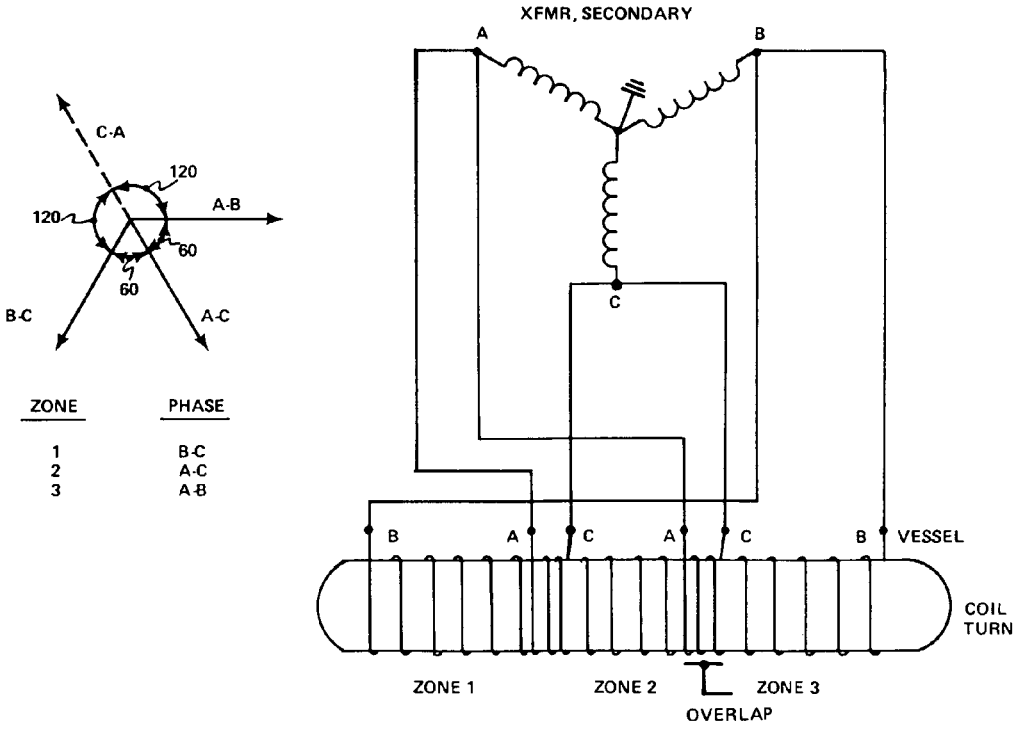

Figure 11—Three-phase connection

Copyright © 2000 IEEE. All rights reserved.
Copyright The Institute of Electrical and Electronics Engineers, Inc.
Provided by IHS under license with IEEE
No reproduction or networking permitted without license from IHS
Not for Resale

9.3.5 Safety Considerations

9.3.5.1 Heating coil

The heating coil is located at the pipeline or the vessel to be heated, and in many cases is left exposed for convection cooling. The coil should be isolated by location or barricaded to prevent personnel contact, or a nonmetallic barrier can be used around the outside of the coil. The top and bottom of the barrier must be left open for air circulation. Aluminum can be used for the barrier, if it has an isolated joint to interrupt the current path. The coil may be encapsulated in an epoxy with good heat transfer characteristics for safety and mechanical protection.

Water-cooled coils may be completely enclosed, and if magnetic shunts are used, a grounded metal sheath can be used around the assembly.

9.3.5.2 Grounding

The secondary of transformers serving the coil may be grounded at one point. A ground fault circuit interrupter may be used to take the coil off the line if a second ground develops. A current or voltage relay may be used to provide this protection.

9.3.5.3 Isolation

The high current in the pipeline or the vessel being heated ensures that there are small differences of potential between different points on the surface of the wall and between the wall and ground. No metallic objects in contact with the vessel in the heating zone should be grounded or interconnected with each other, as a parallel current path would be created. Where possible, these items should be isolated from the vessel wall, from the ground, and from each other.

9.3.5.4 Stray field effects

A continuous metallic path around the coil will have induced currents, wasting power and presenting a burn hazard to personnel because of eddy-current heating. These paths should be opened or electrically isolated to prevent the induced currents.

Metal paths around the coil with marginal or intermittent insulation may cause arcing. Such paths shall be bonded in accordance Article 427-37 of National Electrical Code® (NEC®) NFPA 70-1999, or shielded with a cooled copper shorting ring.

9.4 Specification

In addition, there are some requirements that apply only to induction heating systems; see Clause 7.

9.4.1 Description of load to be heated

Drawings are necessary in describing the dimensions and the shape of the load. Dimensions should include length, outside dimensions, wall thickness, openings, and any other irregularities, and fluid levels when a pipeline or a vessel is subject to fluid level variations.

Type and properties of pipeline or vessel wall material should include density, specific heat, thermal conductivity, resistivity, temperature coefficient of resistivity, temperature coefficient of expansion, magnetic or nonmagnetic, permeability curve, and saturation flux density.

--`,,```,,,,````-`-`,,`,,`,`,,`---
Copyright © 2000 IEEE. All rights reserved.

Copyright The Institute of Electrical and Electronics Engineers, Inc.
Provided by IHS under license with IEEE
No reproduction or networking permitted without license from IHS
Not for Resale

9.4.2 Services

Available water supply quantity and quality and the corrected power factor requirement should be described.

9.4.3 Environmental conditions

Specific instructions on isolation or shielding in the field should be given.

9.4.4 Testing and inspection

For induction heating, meaningful tests may require that a section of the pipeline or the vessel to be heated be shipped to the shop of the heating vendor.

9.5 Installation

See the requirements in Clause 6 and Clause 7 for further information.

9.5.1 Thermal insulation system and weather barrier

When not a part of the heating assembly, the thermal insulation system and weather barrier should be installed prior to installation of the electric heating coil. The weather barrier should be nonmetallic. Review the insulation system for integrity before installation and promptly repair any damage done while installing the induction coil.

9.5.2 Isolation from multiple ground paths

Most pipelines and vessels are inherently grounded through piping connections, supports, and foundations; connections to the vessel in the heating zone should be isolated so that they do not form a parallel conductive path.

9.5.3 Heating coil

The exact number of turns specified should be used. All turns should be wound in one direction, except when instructed otherwise, to maintain flux cancellation on a three-phase system.

Where large masses, such as valves or flanges in pipelines, are in the heating zone, the induction coil turns should be more closely spaced around these devices to generate extra heat. Provisions may be made for adjusting these turns while taking field measurements of temperatures when the system is in service. Minimum spacing between the turns should be maintained for cooling.

9.5.4 Integral system protection requirements

The coil, connecting leads, and unit transformers, when used, are an integral part of the induction heating system equipment and are not subject to the provisions for wiring protection in NEC, or an equivalent standard.

9.5.5 Service

Where individual conductors are run to the ends of a coil, any raceway or box used shall be of nonmagnetic materials per Article 300-20(b) of ANSI/ NFPA 70-1999.

Water supply and drain connections to the coil shall be electrically isolated from the coil. Water should normally flow from the bottom to the top of coil to ensure that there are no voids in the coil.

Copyright © 2000 IEEE. All rights reserved.
Copyright The Institute of Electrical and Electronics Engineers, Inc.
Provided by IHS under license with IEEE
No reproduction or networking permitted without license from IHS
Not for Resale

9.6 Testing

Review the instructions in 7.8 for additional information.

9.6.1 Temperature control calibration/indication

Confirm that all temperature controllers and indicators are calibrated and reading the temperature at the correct location before starting tests. Induction heating can rapidly overheat the pipeline or the vessel if not closely controlled.

9.6.2 General control

If there is a dedicated transformer for the induction heating system, set it for the lowest secondary voltage. Set the temperature controller to call for zero output by manual adjustment or by setting the temperature set point below the temperature measured by the sensor. Energize the heating circuit and slowly increase the manual adjustment or the set point until the temperature controller output calls for full heat.

9.6.2.1 On-off control

Check the coil current when the coil is turned on. If it is lower than the design rating, de-energize the circuit and change to the next higher transformer tap. Continue testing until the current closely matches the design rating. If the current is higher than the design rating, discuss this with the coil designer.

9.6.2.2 Phase control

Proper adjustment of bias, gain (span), and current limit are critical in this application. Follow the manufacturer's instructions in making these settings. If it is not possible to achieve the rated current, de-energize the circuit and change to the next higher transformer tap and repeat the procedure

9.6.2.3 Specialized control

For specialized types of control, follow the manufacturer's instructions.

9.6.3 Initial heat up

Allow the system to heat up under regular operating conditions to ensure that all zones are automatically controlled.

Measure the temperature profile after the system has stabilized to determine if any coils require relocation.

Measure temperature, potential, and currents in exterior metallic pieces to determine if there are stray field problems that need to be alleviated.

The operation may show that coil design parameters should be modified. Load coupling, stray losses, and material properties can vary enough to cause higher or lower output than required.

9.7 Operation

See Clause 6 and Clause 7 for information.

9.8 Maintenance

See 7.10 for additional information.

Copyright © 2000 IEEE. All rights reserved.

Copyright The Institute of Electrical and Electronics Engineers, Inc.
Provided by IHS under license with IEEE
No reproduction or networking permitted without license from IHS
Not for Resale

9.8.1 Thermal insulation

If the thermal insulation system fails, the heating coil will be exposed to the pipeline or the vessel wall temperature.

9.8.2 Convection cooling

The air passages around convection cooled coils cannot be blocked. Dust or other contaminants should not be allowed to collect on the coil to interfere with its ability to dissipate heat.

9.8.3 Water cooling

Water-cooled coils should be regularly checked for leaks and proper flow. Flow switches should be operated and calibrated. The coils should be cleaned as often as necessary to avoid restriction of flow. If deposits or corrosion are excessive, contact the supplier for a recommendation. The integrity of isolation between the water supply, the drain, and the coil should be maintained.

9.8.4 Shielding

Shielding should be inspected to ensure that there is no arcing or heat buildup in metallic parts near the coil. Where installed, bonding should be checked for continuity.

9.9 Special considerations

9.9.1 Curie temperatures

Consideration should be given to the loss of heating when the Curie temperature of magnetic materials is exceeded.

9.9.2 Change in properties

Most metals undergo a significant change in properties, such as resistivity, with changing temperature. This should be taken into consideration in the coil design and the sizing of distribution equipment.

9.9.3 Classified areas

The unique factor of induction heating that allows for heating a vessel wall to high temperatures while none of the electrical components are much above ambient temperature should be given consideration for pipeline or vessel heating in classified areas.

10. Induction susceptor heating furnaces within a vessel

10.1 Furnace description

10.1.1 General

This type of furnace is used to isolate the process from the surroundings. Isolation may be necessary because the atmosphere necessary to heat treat the load may need to be inert or may be hazardous or toxic; the load may react by ignition or explosion if exposed to oxygen; or the reaction products of the process may be flammable, hazardous, or toxic.

Copyright © 2000 IEEE. All rights reserved.
Copyright The Institute of Electrical and Electronics Engineers, Inc.
Provided by IHS under license with IEEE
No reproduction or networking permitted without license from IHS
Not for Resale

10.1.2 Arrangement

The general construction of the furnace is as shown in Figure 12.

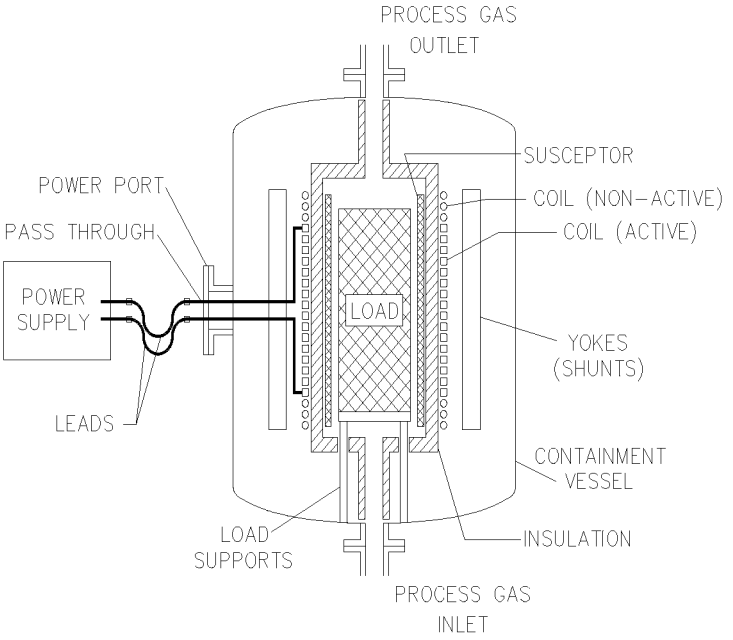

Figure 12—Induction susceptor heating furnace construction

10.1.3 Principle of operation

This time varying coil current from the power supply sets up time varying magnetic flux lines that cause current to flow in the susceptor. This current heats the susceptor which radiates heat to a load within; see Figure 13.

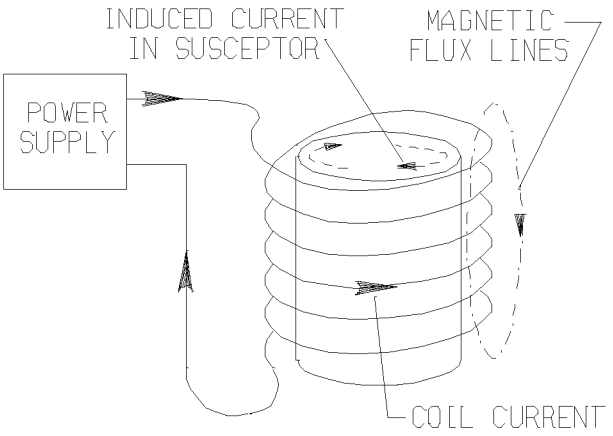

Copyright © 2000 IEEE. All rights reserved.

Copyright The Institute of Electrical and Electronics Engineers, Inc.
Provided by IHS under license with IEEE
No reproduction or networking permitted without license from IHS
Not for Resale

10.1.4 Water cooling

Water cooling is normally required to remove heat from the coil in this type of furnace. The heat arises from I^2R losses in the coil conductors and conducted and radiated heat loads from the susceptor. A backup cooling water source is strongly recommended to prevent possible equipment damage in the event the primary water system would fail.

Any vessel cooling should be valved with manually operated valves, located remote from the vessel, and cut off in an emergency. Motor driven or air operated valves can also be used if interlocked properly to prevent accidental or untimely operation.

10.2 Subsystems

10.2.1 Power supply

10.2.1.1 Types (Vendor will select the most appropriate)

10.2.1.1.1 Line frequency

A power supply that supplies current to the induction coil at the same frequency as the electrical service to the power supply.

10.2.1.1.2 Magnetic frequency multiplier

A power supply that supplies current to the induction coil at a frequency that is an exact multiple (usually three times) of the frequency of the electrical service to the power supply.

10.2.1.1.3 Solid state inverter

A power supply that supplies current to the induction coil at any desired frequency that is unrelated to the frequency of the electrical service to the power supply.

10.2.1.2 Enclosure(s)

Enclosure(s) should be free standing, floor mounted, and suitable for the area in which it is installed. Each door shall be lockable. Doors should be interlocked to comply with all applicable local codes and standards. Isolation valves should be provided in the water system circuits external to the power supply to allow for individual replacement of failed devices.

10.2.1.3 Main disconnect

Switch should be three pole load break switch, or circuit breaker, rated to carry maximum rated amperes continuously. Switch handle should be in the door and be lockable in the "off" position. Switch shall be installed in accordance with all applicable local codes and standards.

10.2.1.4 Induction generator

Converts input line frequency power to the output voltage and frequency suitable for powering the induction coil.

Copyright © 2000 IEEE. All rights reserved.
Copyright The Institute of Electrical and Electronics Engineers, Inc.
Provided by IHS under license with IEEE
No reproduction or networking permitted without license from IHS
Not for Resale

10.2.1.5 Isolation transformer

A two winding isolation transformer with a kVA rating to transmit full generator power continuously to the coil(s) shall be provided. This transformer may be connected to either the input or output of the power supply.

10.2.1.6 Capacitors

Capacitors may be required for tank circuit tuning or power factor correction. Vendor should select voltage and kvar rating. Tap arrangements should be provided if required to match the load. Capacitors may be water cooled. Capacitor installation shall comply with all applicable local codes and standards.

10.2.1.7 Control Compartment

The compartment door shall be lockable if required by local codes.

10.2.2 Induction Coil

10.2.2.1 Construction

Coil should be constructed of seamless copper tubing, of proper size for ampacity and cooling water requirements.

10.2.2.2 Coil zones

Coil may be divided electrically into a number of zones required to give user's specified temperature distribution in the load zone. Electrical connections for each zone are to be brought out of the vessel through one or more power ports in the vessel.

10.2.2.3 Water connections

Water inlet and outlet connections are to be provided for each zone.

10.2.2.4 Coil insulation

Coil shall be fully insulated for operation at the specified voltage and in the atmosphere as specified.

10.2.2.5 Coil support

Provisions should be made for supporting the coil inside the vessel.

10.2.2.6 Shading rings

High conductivity shading rings should be provided for the ends of the coil to intercept end leakage flux if required to minimize heating of vessel and supports.

10.2.3 Containment vessel

10.2.3.1 Material

Vessel material shall be suitable for the process.

Copyright © 2000 IEEE. All rights reserved.

Copyright The Institute of Electrical and Electronics Engineers, Inc.
Provided by IHS under license with IEEE
No reproduction or networking permitted without license from IHS
Not for Resale

10.2.3.2 Inner supports

Vessel should have inner supports for magnetic yokes (if required), coil, insulation, susceptor, and load to be processed.

10.2.3.3 Flanged nozzles

Vessel should have flanged process gas or vacuum nozzles as required.

10.2.3.4 Connection ports

Vessel should have connection port assembly(s) for electrical and water service to the furnace.

10.2.3.5 Safety

Vessel shall be designed to safely withstand all normal and foreseeable abnormal process conditions.

10.2.4 Connections

10.2.4.1 Power supply connection assembly

10.2.4.1.1 Ampacity

Assembly shall contain electrical connections from the power supply output to the connection port assembly of sufficient ampacity to carry the maximum design coil current(s).

10.2.4.1.2 Cooling water

Assembly shall contain water connections from the power supply output to the connection port assembly of a size adequate to carry sufficient water to cool the power connection assembly and the induction coil(s).

10.2.4.1.3 Connection fit up

Provisions should be made for flexibility in the end connection for both electrical and water connections for ease of fit-up.

10.2.4.1.4 Electrical conductors

Electrical conductors should be arranged to minimize circuit inductance and associated losses.

10.2.4.1.5 Bus bars

The bus assembly should have flanges to match vessel and power supply ports. Bus enclosure shall be a nonmagnetic metal suitable for the service. If called for, the enclosure should be sealed and gasketed to maintain a positive pressure of 24.9 Pa.[7] Water may be circulated through metal tubes attached to the bus bars for cooling to maintain specified temperature.

[7] 24.9 Pa = 0.1 in of water column.

Copyright © 2000 IEEE. All rights reserved.
Copyright The Institute of Electrical and Electronics Engineers, Inc.
Provided by IHS under license with IEEE
No reproduction or networking permitted without license from IHS
Not for Resale

10.2.4.2 Vessel connections

10.2.4.2.1 Induction coil power connections (power port)

- Power connections should be made through flanged openings in the vessel wall and should be suitable for the pressure rating and the process gas to be used.
- Assembly should provide an interface between coil electrical and water connections and power connection assembly.
- Screening should be provided, if required, to minimize heating of the vessel port(s) by induction from the high frequency currents being transported.
- Provisions should be made in the design of the assembly to allow the coil assembly to be removed lengthwise when one vessel end is removed.

10.2.4.3 Vessel connectors

10.2.4.3.1 Vacuum or pressurization connections

Vacuum or pressurization connections should be made through flanged openings in the vessel wall and should be suitable for the pressure rating and the process gas to be used.

10.2.4.3.2 Process Gas Connections

Process gas connections should be made through flanged openings in the vessel wall and should be suitable for the pressure rating and the process gas to be used.

10.2.5 Susceptor

10.2.5.1 General

Susceptor shall be suitable for the process.

10.2.5.2 Mounting

Provisions should be made for supports to mount susceptor coaxially in the coil.

10.2.5.3 End plates

Susceptor end plates are to be furnished if required to reduce temperature end effects to acceptable limits.

10.2.6 Thermal Insulation

10.2.6.1 General

Insulation shall be suitable for the process.

10.2.6.2 Thickness

Coil should be separated from the susceptor by a layer of thermal insulation of sufficient thickness to minimize losses and to prevent coil and vessel heating beyond prescribed maximums. A safety factor appropriate to the application is to be allowed for insulation degradation.

Copyright © 2000 IEEE. All rights reserved.

Copyright The Institute of Electrical and Electronics Engineers, Inc.
Provided by IHS under license with IEEE
No reproduction or networking permitted without license from IHS
Not for Resale

10.2.6.3 Temperature rating

Insulation should have a temperature rating compatible with the maximum operating temperature of the susceptor plus an allowance for normal temperature excursions.

10.2.6.4 Overtemperature protection

Independent overtemperature protection shall be provided to turn off power to the coil if the temperature of the system exceeds its maximum safe operating value.

10.2.7 Magnetic yokes (shunts)

10.2.7.1 General

Yokes should be provided, if required, to minimize power loss and assure that the vessel wall does not reach a temperature that creates a hazard to operating personnel or that compromises the functionality of the vessel and associated equipment when operating at maximum specified temperature and power for a prolonged period.

10.2.7.2 Laminations

Laminations should be protected against corrosion in the expected furnace atmosphere.

10.2.7.3 Support

Yokes should be supported in the space between the coil and vessel wall in locations to provide optimum interception of magnetic flux. Supports should be located to minimize any circulating currents and associated hot spots.

10.2.7.4 Vibration

Laminations should be compressed and held to minimize vibration and associated noise.

10.2.8 Cooling system

10.2.8.1 General

The cooling system should be designed to maintain proper operating temperatures of the cooled components.

10.2.8.2 Compatability

The coolant used should be compatible with the components to be cooled.

10.2.8.3 Back-up system

Consideration should be given to supplying a backup cooling system to safely cool components in the event of a failure of the cooling system. This backup cooling system must remain in the event of a total loss of electrical power.

Copyright © 2000 IEEE. All rights reserved.
Copyright The Institute of Electrical and Electronics Engineers, Inc.
Provided by IHS under license with IEEE
No reproduction or networking permitted without license from IHS
Not for Resale

10.2.9 Vacuum or pressurization system

10.2.9.1 General

A vacuum or pressurization system shall be suitable for the atmosphere or process gas to be used.

10.2.9.2 Suitability

A vacuum or pressurization system shall be suitable for the pressure or vacuum levels required for the process.

10.2.9.3 Pressure level

A vacuum or pressurization system should be sized to establish and maintain the required pressure level for the process.

10.3 Safety

10.3.1 Grounding (Earthing)

All components (except coil) shall be grounded in accordance with all applicable local codes and standards. Exposed noncurrent carrying metal parts of the equipment shall be grounded.

10.3.2 Energized parts

Electrically energized portions of the system shall be insulated or isolated from inadvertent touch.

10.4 Installation

10.4.1 General installation

— The equipment shall be installed in accordance with all applicable local codes and standards. For a typical installation in the United States, these would include the following:

— NEC or an equivalent standard.

— NFPA 86-1995 [B27] or equivalent standard.

— NFPA 86C-1995 [B28] or an equivalent standard.

— NFPA 86D-1995 [B29] or an equivalent standard.

— All country, state, and local codes.

— ASME Section VIII [B5], nonfired pressure vessels code or equivalent (if applicable).

10.4.2 Installation support

Vendor's drawings, installation, and testing instructions shall be followed. It is recommended that a vendor technician instruct installation personnel before work is started, provide special tools and materials, work with them until assured they are capable, inspect prior to commissioning, and participate in the commissioning.

Copyright © 2000 IEEE. All rights reserved.

Copyright The Institute of Electrical and Electronics Engineers, Inc.
Provided by IHS under license with IEEE
No reproduction or networking permitted without license from IHS
Not for Resale

10.5 Maintenance

Maintenance information should include the following:

— Vendor or supplier should advise schedule for routine maintenance.

— Vendor should advise a user's stocking needs for spare parts and assemblies.

— Vendor should describe tests that periodically check the status of equipment.

— Vendor should describe technical assistance available, where it's located, and the estimated time to respond to need.

— Vendor should advise spares on hand, time to assemble complex devices, and estimated time to delivery.

11. Skin-effect heating

11.1 Introduction

11.1.1 General

Skin-effect heating is a special form of impedance heating in which a single insulated conductor is run inside a ferromagnetic envelope. The cable is connected to the envelope at one end (the far end) and a source of ac power is connected between the cable and the envelope at the other end (the supply end). Current flows from the power source through the insulated cable to the far end and returns through the envelope. The basic system is illustrated in Figure 14.

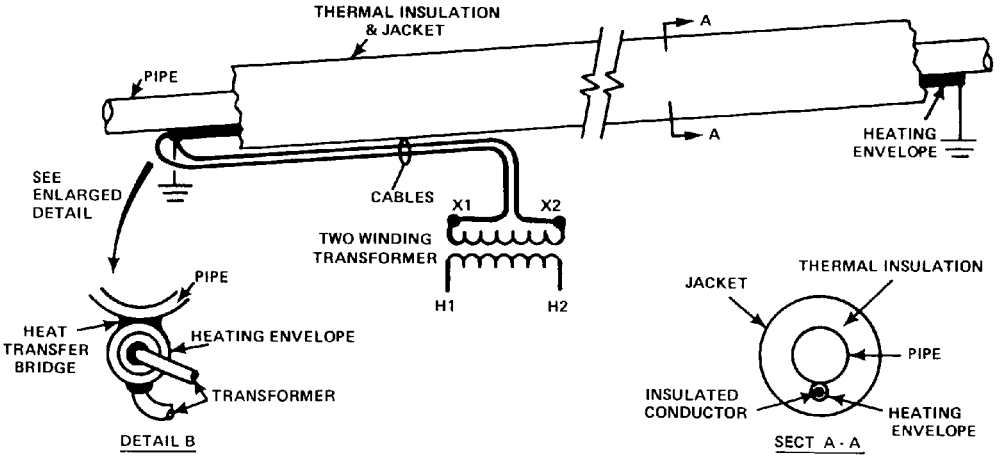

Figure 14—Skin-effect system

11.1.2 Principle of operation

In skin-effect heating, heat is generated in the ferromagnetic envelope wall by the I^2R loss of the return current flow and by hysteresis and eddy currents induced by the alternating magnetic field around the insulated conductor. Additional heat is produced by the I^2R loss in the insulated conductor.

Copyright © 2000 IEEE. All rights reserved.
Copyright The Institute of Electrical and Electronics Engineers, Inc.
Provided by IHS under license with IEEE
No reproduction or networking permitted without license from IHS
Not for Resale

The inductive interaction between the current in the insulated cable and the return current in the envelope causes the current in the envelope to concentrate at its inner surface. This phenomenon, properly referred to as proximity effect, is commonly called skin effect; hence, the name skin-effect heating.

A distinctive feature of the skin-effect heating system is that the voltage drop on the surface of the envelope is extremely small. If the envelope and, therefore, the power supply, are grounded at the supply end, the entire envelope will remain at essentially ground potential.

11.2 Selection criteria and applications

11.2.1 General

The length of a single circuit is limited only by the voltage limitation of the insulation on the inner conductor. With 600 V insulation, envelope lengths of up to approximately 1500 m are feasible. If envelopes are run in both directions along a pipeline from a power source, double the length of pipeline can be heated from a single power center. Envelope lengths of up to approximately 7500 m are feasible with supply voltages of 3000 V. Longer lengths are possible with higher voltages. Above approximately 3000 V, shielded cable should be considered. This creates additional design complications. The return current preferentially flows in the shield and induces high voltages in the shield. Sections of the shield must be electrically isolated to interrupt current flow. The design of splices in shielded cable is critical, and extreme care should be taken to ensure that the splices are installed in accordance with the manufacturer's instructions. This recommended practice does not cover the use of shielded cables.

11.2.2 Long lines

Because long heating circuits are feasible, skin-effect heating is particularly well-suited for long pipelines. The heating envelope is normally laid parallel to the pipeline and physically bonded to it continuously or at regular intervals. For large pipelines or high heat requirements, several envelopes may be spaced around the carrier pipeline.

11.2.3 Vessels

Cylindrical vessels can be heated by wrapping the heating envelope around the vessel. Flat surfaces can be heated by a series of parallel envelopes connected by U-bends or ferromagnetic junction boxes at each end; the single continuous internal conductor runs back and forth through the envelopes. Even though the envelopes are continuously connected together electrically, essentially all of the return current will flow in the envelopes in series, following as closely as possible the internal conductor, because this is the path of minimum impedance.

11.3 Design guidelines and considerations

11.3.1 Heating system

Designs are normally handled as part of a complete system designed and furnished by the manufacturer. The cable, envelope, and current must be selected to produce the required heat output. In addition, the envelope must be sized to permit easy pulling of the conductor. The heating system package may include pipe, insulation, control, and power supply components.

11.3.2 Selection of parameters

The heat produced per unit length of envelope is a function of current magnitude, frequency, size, and material of the insulated cable; envelope size and wall thickness; and resistivity and relative permeability of the envelope material. Normally, power-frequency (50–60 Hz) current is used. The insulated cable is copper

Copyright © 2000 IEEE. All rights reserved.

Copyright The Institute of Electrical and Electronics Engineers, Inc.
Provided by IHS under license with IEEE
No reproduction or networking permitted without license from IHS
Not for Resale

wire or cable, and the envelope is carbon steel pipe or tubing. Typically, pipes are 1338 mm (0.5–1 in nominal pipe size) in diameter. For 50–60 Hz power, the wall thickness should be about 3 mm minimum. Heat output per envelope is normally in the range of 30–150 W/m, and the total circuit voltage drop 0.3–0.6 V/m. Current required may range from less than fifty to several hundred amperes.

11.3.3 Control and monitoring

Temperature controls should be kept as simple as possible, consistent with process requirements. The simplest type of control is on-off. Where more precise temperature control is required, analog control can be used. Monitoring devices to check heater operations should be provided in critical applications. Control and monitoring are covered in detail in Clause 6.

An ammeter should be provided to monitor the current in each circuit. Failure of the insulation on the wire in the envelope will result in an increase in current; its magnitude will depend on the location of the failure. A large current increase should cause the overcurrent device to operate. A smaller increase can normally be detected by an increase in ammeter readings.

Where envelopes are run in both directions from a single power source, differential current protection can be applied to monitor the current balance between the two circuits. This sensitive type of protection can detect a relatively small current change in one circuit and automatically trip the circuit breaker.

11.3.4 Power system

In skin-effect heating, a single envelope system requires single-phase power, normally at ordinary commercial frequency. Where a single envelope extends in each direction along a pipeline from a single power source, two-phase power can be used, with three- to two-phase transformation (Scott T connection) and a three-phase power supply. With multiple envelope systems, two- or three-phase power can be used, with each phase connected to a separate, insulated cable/envelope system.

Since the voltage required depends on the requirements of the particular heating system, in most cases, a transformer with special output voltages is required. All other components of the power system (switches, fuses, circuit breakers, contactors, etc.) are normally standard equipment.

11.3.5 Grounding

One side of the power system is connected to the envelope at the near end. This envelope should be bonded to ground approximately at intervals of every 600 m. In addition, Article 427-48 of NEC, requires the envelope to be grounded at the far end and permits grounding at intermediate points. Because of the very low potential on the envelope outer surface and the very high impedance of the return current path through the ground, these additional grounds have little, if any, effect.

Where a buried pipeline is cathodically protected, special consideration should be given to the grounding system.

11.3.6 Safety considerations

A skin-effect heating system is physically similar to a single conductor in rigid steel conduit. While current flows in the envelope, the outer surface is at ground potential and there is no shock hazard. Where voltages higher than 600 V are used, high-voltage warning signs should be provided at all pull and junction boxes and at intervals along the line.

In a skin-effect heating system, the envelope normally operates at an elevated temperature, and thermal insulation should be provided to protect personnel from contacting hot surfaces. If the envelope and all pull

Copyright © 2000 IEEE. All rights reserved.
Copyright The Institute of Electrical and Electronics Engineers, Inc.
Provided by IHS under license with IEEE
No reproduction or networking permitted without license from IHS
Not for Resale

or junction boxes are not in good thermal contact with the pipeline or the vessel, very high temperatures can result.

11.4 Specification

A skin-effect heating system is normally designed by a manufacturer who has special expertise in this field. Accordingly, a performance specification, rather than a detailed design specification, is recommended. A specification should completely describe the system to be heated, including pertinent process parameters, ambient conditions, and temperature requirements. Any special requirements such as fast heat up, precise temperature control, high line temperature due to steam-out or abnormal operation, etc., and any special environmental conditions should be included. (See Clause 7 for more information.)

11.5 Installation

Installing a skin-effect heating system is similar to installing a single cable in conduit, but special precautions should be taken. The heating envelope system, including pull and junction boxes, should be tightly bonded to the pipeline or equipment to control differential expansion and to provide good heat conduction. Heat transfer is enhanced by welding or the use of heat transfer cement on the system. Where the envelope system is welded, the inside of the envelope and boxes should be protected from weld spatter. The welding system should be compatible with the pipeline and envelope materials used, and a qualified welder should do the actual welding. Care should be taken to follow suppliers recommendations to eliminate any sharp or rough edges that might damage the cable when pulled through.

When the envelope is preassembled to the pipe and the assembly is preinsulated, care must be taken to prevent damaging the thermal insulation during construction. Field deviations from the piping installation drawings should be kept to a minimum and always approved by a qualified individual.

The number of splices should be minimized, but, where required, splices should be suitable for the circuit voltage, maximum cable current, and temperature. The envelope should be swabbed, blown out, and thoroughly dried before pulling the insulated conductor. Pulling compounds should not be used unless specified by the supplier. The entire envelope system should be kept dry internally. Underground pull and junction boxes should be marked above ground where practicable. Pull box locations should be indicated by permanent markings on the weather barrier surface and on drawings.

Where significant differences in elevations occur along a pipeline or a vessel, the cable should be supported or anchored as required to control cable movement.

Complete installation drawings and specifications are normally provided by the manufacturer. The installation should be made in accordance with the manufacturer's instructions and drawings. Installation supervision and start-up assistance by the technical personnel of the manufacturer should be considered.

11.6 Testing

All testing should be done in accordance with the recommendations of the supplier.

After the insulated cable has been pulled into the envelope and all splices completed, but before connecting the conductor to the power source or to the envelope at the far end, the insulation resistance should be checked. For 600 V cable, a 2500 V dc or higher insulation tester should be used. The minimum acceptable insulation resistance depends on the type and the thickness of the insulation, the size and the length of the conductor, and the insulation temperature. In general, for 600 V wire and normal ambient temperatures, an insulation resistance of about 10 MΩ for 300 m is acceptable.

Copyright © 2000 IEEE. All rights reserved.

Copyright The Institute of Electrical and Electronics Engineers, Inc.
Provided by IHS under license with IEEE
No reproduction or networking permitted without license from IHS
Not for Resale

For cables rated over 600 V, a dc hipot test is recommended in accordance with IEEE Std 400-1990. The recommended test voltage is $1.6 \times (2E + 1000)$, where E is the voltage rating of the cable. The voltage should be increased to the maximum test voltage in approximately ten equal increments. At each step, current shall be stabilized. The voltage and the leakage current should be recorded at each step. If the current increase in any step is more than about 150% of the increase in the previous step, the insulation is questionable.

After connections are complete and the system is energized, the operation of all control and monitoring equipment should be checked.

11.7 Operation

Operating instructions are normally provided by the manufacturer. The system should be operated in accordance with the operating instructions at all times.

11.8 Maintenance

See 7.10 for general maintenance information. A properly installed skin-effect heating system should provide long-term, trouble-free operation. However, normal preventive maintenance for electrical equipment should be performed.

Cable insulation should be tested periodically. 600 V cable insulation should be tested with a 500 V dc or higher insulation tester. Higher voltage cable can be tested with a dc hipot test at 80% of initial test voltage.

If the cable insulation should fail at any time, the failed section between two pull boxes can be replaced without disturbing the thermal insulation or the remainder of the system. This is a significant advantage of skin-effect heating over most other types of electric heating systems.

11.9 Special considerations

11.9.1 Classified locations

Where a skin-effect heating system is installed in a classified area, the envelope, pull, and junction boxes should comply with the requirements of NEC, or an equivalent standard, for the area classification.

11.9.2 Irregular surfaces and heat sinks

Skin effect current tracing depends upon good heat transfer from the envelope to the carrier pipeline. Irregular surfaces and heat sinks in the line should be given special consideration. Valves, flanges, and supports welded to the carrier pipe are devices that generally have larger masses than the carrier pipe and may require more heat. These devices are also irregular shapes that require special fabrication of the envelope. Consideration should be given to increase insulation of these locations, separate heat sources to provide the additional heat, or thermal isolation of these devices from the carrier pipeline. Consideration should also be given to the serviceability of the valve or flange with a rigid envelope around the device.

Copyright © 2000 IEEE. All rights reserved.
Copyright The Institute of Electrical and Electronics Engineers, Inc.
Provided by IHS under license with IEEE
No reproduction or networking permitted without license from IHS
Not for Resale

Annex A

(informative)

Bibliography

[B1] ANSI/ISA 96.1-1982, American National Standard for Temperature Measurement Thermocouples.

[B2] ASTM C450-99, ASTM Standard Practice for Prefabrication and Field Fabrication of Thermal Insulating Fitting Covers for NPS Piping, Vessel Lagging, and Dished Head Segments.

[B3] ASTM C585-90 (1998), ASTM Recommended Practice for the Inner and Outer Diameters of Rigid Thermal Insulation for Nominal Sizes of Pipe and Tubing (NPS System).

[B4] ASME Codes and Standards, Piping Section.[8]

[B5] ASME Section VIII, ASME Rules for Construction of Pressure Vessels.

[B6] Baker, R. M., "Design and Calculation of Induction Heating Coils." *AIEE Transactions on Applications and Industry,* vol. 76, part II, 1957, pp. 31–38.

[B7] Becker, M., *Heat Transfer, A Modern Approach*, New York: Plenum Press, 1986.

[B8] BS 6351-1983 (Reaf. 1993), British Standard for Electric Surface Heating, Parts 1, 2, and 3. Specification, Design, Installation, Testing, and Maintenance of Electric Surface heating Systems.[9]

[B9] EIA 309-1965 (Reaff. 1981), General Specification for Thermistors, Insulated and Non-Insulated.[10]

[B10] Erickson, C. J., *Handbook of Electrical Heating for Industry.* Piscataway, N.J.: IEEE Press, 1995.

[B11] Federal Energy Administration, "Economic Thickness for Industrial Insulation," Energy Conservation Paper Number 46, August 1976.

[B12] Hilpert, R., "Warmeabgabe von Geheizen Drahten und Rohren," *Forsch Geb Ingenieurwes,* 1933, vol. 4, p. 220.

[B13] Holman, J. P., *Heat Transfer*, New York: McGraw-Hill, 1979.

[B14] IEC60529:(1989-11), IEC Standard for Degrees of Protection Provided by Enclosures (IP Code).[11]

[B15] IEEE Dictionary of Electrical and Electronics Terms, Sixth Edition.

[B16] IEEE 515-1997, IEEE Standard for the Testing, Design, Installation, and Maintenance of Electrical Resistance Heat Tracing for Industrial Applications.

[8]ASME publications are available from the American Society of Mechanical Engineers, 3 Park Avenue, New York, NY 10016-5990, USA (http://www.asme.org/).

[9]BS publications are available from British Standards Institution, 2 Park Street, London W1A 2BS, UK (http://www.bsi.org) or (http://global.ihs.com/).

[10]EIA publications are available from Electronic Industries Alliance, 2500 Wilson Blvd., Arlington, VA 22201-3834, USA (http://www.eia.org) or (http://global.ihs.com/)

[11]IEC publications are available from the Sales Department of the International Electrotechnical Commission, Case Postale 131, 3, rue de Varembé, CH-1211, Genève 20, Switzerland/Suisse (http://www.domino.iec.ch/webstore/.nsf/welcome?readform). IEC publications are also available in the United States from the Sales Department, American National Standards Institute, 11 West 42nd Street, 13th Floor, New York, NY 10036, USA.

Copyright © 2000 IEEE. All rights reserved.

Copyright The Institute of Electrical and Electronics Engineers, Inc.
Provided by IHS under license with IEEE
No reproduction or networking permitted without license from IHS
Not for Resale

[B17] IEEE 515.1-1995, IEEE Recommended Practice for the Testing, Design, Installation, and Maintenance of Electrical Resistance Heat Tracing for Commercial Applications.

[B18] IEEE Std 622-1987 (Reaff 1994), ANSI/IEEE Recommended Practice for the Design and Installation of Electric Heat Tracing Systems for Nuclear Power Generating Stations.

[B19] IEEE Std 622A-1984 (Reaff 1994), IEEE Recommended Practice for the Design and Installation of Electric Pipe Heating Control and Alarm Systems for Power Generating Stations.

[B20] Kesavamurthy, N., and Rajagopalan, P. K., "Eddy Currents in Solid Iron Due to Alternating Magnetic Flux." *Proceedings of the IEEE*, 1958-59-C-207.

[B21] Kraus, J. D., *Electromagnetics*, 1st Ed., New York: McGraw-Hill, 1953.

[B22] Kennelly, A. E., and Sanborn, H. S., *Procedures of the American Philosophical Society,* 1914, pp. 55-77.

[B23] Lavers, J. D., "An Efficient Method of Calculating Parameters for Induction and Resistance Heating Installations with Magnetic Loads," *IEEE Transactions on Industry Applications*, vol IOA-14, no. 5, Sept/Oct 1978, pp 427–432.

[B24] Malloy, J. F., *Thermal Insulation*, 1st Ed., New York: Van Nostrand Reinhold, 1969.

[B25] McAdams, W. H., *Heat Transmission*, 3rd Ed., New York: McGraw Hill, 1954.

[B26] NEMA250-1999, NEMA Enclosures for Electrical Equipment (1000 Volts Maximum).[12]

[B27] NFPA 86-1995, NFPA Standard for Ovens and Furnaces.[13]

[B28] NFPA 86C-1995, NFPA Standard for Ovens and Furnaces Using a Special Processing Atmosphere.

[B29] NFPA 86D-1995, NFPA Standard for Industrial Furnace Using Vacuum as an Atmosphere.

[B30] NFPA-NEC-TCD-1983, National Electrical Code Technical Committee Documentation for 1983 Annual Meeting.

[B31] Simpson, P. C., *Induction Heating*, 1st Ed., New York: McGraw-Hill, 1960.

[B32] Turner, W., and Malloy, J. F., *Handbook of Thermal Insulation Design Economics for Pipes and Equipment,* New York: McGraw-Hill, 1980.

[B33] UL 508-1993, UL Standard for Safety for Industrial Control Equipment.

[B34] UL 1561-1999, UL Standard for Dry-Type General Purpose and Power Transformers.

[B35] Branscome, Erickson, Jones, and Rafferty, "An Economical, High Temperature, Impedance Heat Exchanger," *IEEE Transactions on Industry Applications*, vol. 33, no. 5, Sept./Oct. 1997.

[12]NEMA publications are available from Global Engineering Documents, 15 Inverness Way East, Englewood, Colorado 80112, USA (http://global.ihs.com/).

[13]NFPA publications are published by the National Fire Protection Association, Batterymarch Park, Quincy, MA 02269, USA (http://www.nfpa.org/).

Copyright © 2000 IEEE. All rights reserved.
Copyright The Institute of Electrical and Electronics Engineers, Inc.
Provided by IHS under license with IEEE
No reproduction or networking permitted without license from IHS
Not for Resale

Annex B

(informative)

Pipe heat-loss considerations

B.1 Heat-loss formula and example calculations

There are many variations of the general equation [Equation (B.1) below] that define the heat loss from a pipe. Some of these variations are simplifications made for the ease of calculation, conservative (high) values, or similar reasons. Other variations reflect the absence of terms that are dependent on the insulation system. The variation selected will therefore be dependent on the situation at hand and the desired goal.

$$q = \frac{T_p - T_a}{\frac{1}{\pi D_1 h_i} + \frac{1n(D_2/D_1)}{2\pi K_1} + \frac{1n(D_3/D_2)}{2\pi K_2} + \frac{1}{\pi D_3 h_{co}} + \frac{1}{\pi D_3 h_o}} \quad \text{(B.1)}$$

where:

q	The heat loss per unit length of pipe (W/m, Btu/h · ft)
T_p	The desired maintenance temperature (°C, °F)
T_a	The minimum design ambient temperature (°C, °F)
D_1	Inside diameter of the inner insulation layer (m, ft)
D_2	Outside diameter of the inner insulation layer (m, ft) (Inside diameter of the outer insulation layer when present)
D_3	Outside diameter of the outer insulation layer when present (m, ft)
K_1	The thermal conductivity of the inner layer of insulation evaluated at its mean temperature (W/m · °C, Btu/h · ft · °F)
K_2	The thermal conductivity of the outer layer of insulation, when present, evaluated at its mean temperature (W/m · °C, Btu/h · ft · °F)
h_i	The inside air contact coefficient from the pipe to the inner insulation surface when present
h_{co}	The inside air contact coefficient from the outer insulation surface to the weather barrier when present (W/m^2 · °C, Btu/hr · ft^2 · °F)
h_o	The outside air film coefficient from the weather barrier to ambient (W/m^2 · °C, Btu/h · ft^2 · °F). Typical values for this term range from 3 W/m^2 · °C to 284 W/m^2 · °C (0.5 Btu/h · ft^2 · F to 50 Btu/h · ft^2 · °F) for low (below 50 °C) temperature applications

Equation B.1 includes all common resistances to heat flow that may be present. For a typical insulation system consisting of a single type of insulation, no over sizing and a metal weather barrier, Equation B.1 reduces to Equation B.2:

Copyright © 2000 IEEE. All rights reserved.

Copyright The Institute of Electrical and Electronics Engineers, Inc.
Provided by IHS under license with IEEE
No reproduction or networking permitted without license from IHS
Not for Resale

$$q = \frac{T_p - T_a}{\frac{1n(D_2/D_1)}{2\pi K} + \frac{1}{\pi D_2 h_{co}} + \frac{1}{\pi D_2 h_o}} \quad \text{(B.2)}$$

When a mastic weather barrier is used equation B.2 reduces to:

$$q = \frac{T_p - T_a}{\frac{1n(D_2/D_1)}{2\pi K} + \frac{1}{\pi D_2 h_o}} \quad \text{(B.3)}$$

Finally, the $1/(\pi)(D2)(h_o)$ term may be omitted to give a conservative (high) heat loss. Equation B.3 then becomes Equation B.4 which expresses heat loss per unit length as follows:

$$q = \frac{2\pi K(T_p - T_a)}{1n(D_2/D_1)} \quad \text{(B.4)}$$

Equation B.5 gives the total heat loss for a pipe of length L. This is the form of Equation 1 used in BS 6351 [B7].

$$q = \frac{2\pi KL(T_p - T_a)}{1n(D_2/D_1)} \quad \text{(B.5)}$$

It should be noted that the film coefficients and insulation thermal conductivities are functions of temperature. Initially, the temperature at the location of each resistance is not known and should be assumed. Based on the initial temperature profile assumption, a heat loss and a new temperature profile is calculated. If agreement between the assumed temperature profile and the calculated temperature profile occurs, then a solution has been obtained. If not, the calculated temperature profile should be used for the next assumed temperature profile and the calculation should be repeated.

Air film coefficients h_{co}, h_o, and h_i are effective values based on the combined heat losses due to convection and radiation. The convective portion of these coefficients is highly dependent on the velocity of the air surrounding the surface. If the air is still, heat loss due to convection is denoted as free convection. If the air is circulated by wind, the loss is termed as forced convection. Estimation of heat-transfer coefficients due to convection is based on experimental data. This data is essentially relates Nusselt numbers to Rayleigh numbers for free convection (Holman [B12] and McAdams [B23]) and Nusselt numbers to Reynolds and Prandtl numbers for forced convection (Hilpert [B11] and Holman [B12], and Kennelly and Sanborn [B20]). Since electric heat tracing systems are predominantly concerned with heat loss from cylindrical pipes in air at atmospheric pressure conditions, the empirical relationships describing these heat-transfer rates can be simplified as follows.

Simplified equations for laminar free convection in air at atmospheric pressure (Holman [B12] and McAdams [B23]) are as follows:

$$h = C_1\left[\frac{T_s - T_{amb}}{d}\right]^{0.25} \text{ for horizontal pipes} \quad \text{(B.6)}$$

$$h = C_2\left[\frac{T_s - T_{amb}}{L}\right]^{0.25} \text{ for vertical pipes} \quad \text{(B.7)}$$

Copyright © 2000 IEEE. All rights reserved.
Copyright The Institute of Electrical and Electronics Engineers, Inc.
Provided by IHS under license with IEEE
No reproduction or networking permitted without license from IHS
Not for Resale

where

h	heat transfer coefficient due to free convection (W/m^2 · °C, Btu/h · ft^2 · °F)
C_1	1.32 (metric), 0.27 (US)
T_s	temperature of cylindrical surface (°C, °F)
Tamb	temperature of surrounding ambient air (°C, °F)
d	diameter of cylindrical surface (m, ft)
C_2	1.42 (metric), 0.29 (US)
L	vertical length of cylinder (m, ft)

Simplified equations for forced convection for a cylinder in air at atmospheric pressure (Hilpert [B11], Holman [B12], and Kennelly and Sanborn [B20]) are as follows:

$$h_f = \frac{C_3 k_f}{d}\left(\frac{Vd}{v_f}\right)^n (\mathrm{Pr})^{\frac{1}{3}} \tag{B.8}$$

where

h_f	heat transfer coefficient due to forced convection (W/m^2 · °F, Btu/h · ft^2 · °F)
C_3	0.266, empirical dimensionless constant
K_f	thermal conductivity of air evaluated at the average air film temperature
d	diameter of cylinder (m, ft)
V	wind velocity (m/s, ft/s)
v_f	kinematic viscosity, evaluated at the average air film temperature (m^2/s, ft^2/s)
n	0.805, empirical dimensionless constant
Pr	Prandtl number for air evaluated at the average air film temperature (dimensionless)

NOTE—C_3 and n are constant for Reynolds numbers in the range of 40 000 to 400 000 (Holman [B12]), which is sufficient for most typical heat tracing applications. The Reynolds number (Re) is a dimensionless number defined as follows:

$$Re = \frac{Vd}{v_f} \tag{B.9}$$

where these variables are defined identically to the variables in Equation B.8.

Heat loss due to radiation from a cylinder is described by the Stefan–Boltzmann law of thermal radiation (Holman [B12]) as follows:

$$q_r = \sigma \varepsilon A[(T_1 + T_0)^4 - (T_2 + T_0)^4] \tag{B.10}$$

where:

q_r	heat loss of cylinder (W, Btu/h)

Copyright © 2000 IEEE. All rights reserved.

Copyright The Institute of Electrical and Electronics Engineers, Inc.
Provided by IHS under license with IEEE
No reproduction or networking permitted without license from IHS
Not for Resale

σ	$5.669 \cdot 10^{-8}$ (W/m$^2 \cdot$ K^4) $0.1714 \cdot 10^{-8}$ (Btu/h $\cdot$ ft$^2 \cdot$ °R^4)
ε	emissivity of radiating surface (dimensionless)
A	surface area of radiating cylinder (m^2, ft^2)
T_1	surface temperature of cylinder (°C, °F)
T_0	273 °C or 460 °F constant converting temperature (°C, °F) to absolute temperature (K, °R)
T_2	temperature of media surrounding the cylinder (°C, °F)

Although radiation heat transfer is dependent on a fourth power temperature differential, it can be linearized for relatively small temperature differences and treated as an effective convective heat transfer coefficient as follows:

$$h_r = 4\sigma\varepsilon T_m^{\ 3} \tag{B.11}$$

where:

h_r	linearized radiation heat transfer coefficient (W/m$^2 \cdot$ °C, Btu/hr $\cdot$ ft$^2 \cdot$ °F)
T_m	the estimated mean absolute temperature between the surroundings and the radiating surface (°K, °R)

$$T_m = T_0 + \frac{T_1 + T_2}{2} \tag{B.12}$$

where the variables are defined as in Equation B.10.

Example heat loss calculations are as follows:

Pipe size 3.5 in Schedule 40 mild steel pipe. Insulation: Cellular glass, 38 mm thick, with oxidized aluminum weather barrier (oversized to ASTM Standard 4 in nominal pipe insulation size to accommodate a 10 mm O.D. electric tracer)

T_p	65 °C
T_a	–18 °C
Wind	10 m/s
D_2	0.194 m **
D_1	0.116 m
Emittance of oxidized aluminum weather barrier	0.11
Emittance of pipe	0.9
Emittance of insulation	0.9
Thermal conductivity of insulation at 24 °C mean	0.0562 w/m $\cdot$ °C

**It is important to note that ASTM standard thicknesses are nominal and may vary depending on pipe size and nominal insulation thicknesses. Therefore, it is important to know if the insulation thickness being specified is per ASTM C585 [B3] or if it is the actual thickness.

Copyright © 2000 IEEE. All rights reserved.
Copyright The Institute of Electrical and Electronics Engineers, Inc.
Provided by IHS under license with IEEE
No reproduction or networking permitted without license from IHS
Not for Resale

Find: The heat loss per unit length of pipe in both metric and English units, for a horizontal pipe as follows:

1) Using Equation B.4 (which results in the highest calculated heat loss)
2) Using Equation B.3
3) Using Equation B.2

Example 1: Using Equation B.4

$$q = \frac{2\pi K(T_p - T_a)}{1n(D_2/D_1)}$$

$$q = \frac{(2)(\pi)(0.0562)(65-(-18))}{1n(0.194/0.116)}$$

$$q = 56.96 \text{ W/m}$$

or

$$q = (56.96\text{W/m}) \cdot (1\text{m}/3.28\text{ ft}) = 17.37 \text{ W/ft}$$

Example 2: Using Equation B.3

$$q = \frac{T_p - T_a}{\frac{1n(D_2/D_1)}{2\pi K} + \frac{1}{\pi D_2 h_o}}$$

$$q = \frac{(65-(-18))}{\frac{1n(0.194/0.116)}{2(\pi)(0.0562)} + \frac{1}{(\pi)(0.194)(52.91)}}$$

$$q = \frac{(83)}{1457 + 0.031}$$

$$q = 55.78 \text{ W/m}$$

or

$$q = (55.78\text{W/m}) \cdot (1\text{m}/3.28\text{ ft}) = 17.01 \text{ W/ft}$$

Example 3: Using Equation B.2

$$q = \frac{T_p - T_a}{\frac{1n(D_2/D_1)}{2\pi K} + \frac{1}{\pi D_2 h_{co}} + \frac{1}{\pi D_2 h_o}}$$

h_{co} combination of natural convection and radiation; using Equation B.7 and Equation B.11, and assuming a 6 °C temperature differential between the outer insulation surface and the weather barrier.

Copyright © 2000 IEEE. All rights reserved.

Copyright The Institute of Electrical and Electronics Engineers, Inc.
Provided by IHS under license with IEEE
No reproduction or networking permitted without license from IHS
Not for Resale

$$h_{co} = 1.32\left[\frac{-6-(-12)}{0.194}\right]^{0.25} + 4(0.9)(5.669 \cdot 10^{-8})\left[273 + \frac{-6+(-12)}{2}\right]^{3}$$

$$= 3.11 + 3.76$$

$$= 6.87$$

h_o combination of forced convection and radiation; using Equation B.8 and and Equation B.11, and assuming an 8 °C temperature differential between the weather barrier and the ambient temperature.

$$= h_f + h_r$$

Properties of air evaluated at the film temperature are as follows:

kf 0.0228 W/m · °C

vf $1.07 \cdot 10^{-5}$ m/s

Pr 0.72

$$h_o = \left(\frac{0.0266(0.0228)}{0.194}\left[\frac{11.2(0.194)}{1.07 \times 10^{-5}}\right]^{.805}(0.72)^{1/3} + 4(0.11)(5.669 \cdot 10^{-8})\left[273 + \frac{-12+(-20)}{2}\right]^{3}\right)$$

$$= 52.49 + 0.423$$

$$= 52.91$$

From Equation B.2:

$$q = \frac{(65-(-18))}{\frac{1n(0.194/0.116)}{2(\pi)(.0562)} + \frac{1}{(\pi)(0.194)(6.87)} + \frac{1}{(\pi)(0.194)(52.91)}}$$

$$q = \frac{83}{1.457 + 0.239 + 0.031}$$

$$q = 48.06 \text{ W/m}$$

or

$$q = (48.06 \text{ W/m}) \cdot (1 \text{ m}/3.28 \text{ ft}) = 14.65 \text{ W/ft}$$

A more finite analysis of the above problem may be obtained using iterative techniques to determine the thermal conductivity of the thermal insulation and properties of the air film. This would be accomplished by determining what the actual temperature drop across the various thermal resistances would be. However, since these properties are not strong functions of temperature for the small temperature changes that would be found in this example, the total heat loss would be affected minimally.

Copyright © 2000 IEEE. All rights reserved.
Copyright The Institute of Electrical and Electronics Engineers, Inc.
Provided by IHS under license with IEEE
No reproduction or networking permitted without license from IHS
Not for Resale

Annex C

(informative)

Vessel heat-loss considerations

Unlike pipes, vessel heat losses are affected by heat sinks that are integral to the vessel body and must be considered during the basic calculation. To determine the total heat loss, the calculations are broken down into different regions. The total is derived by summing the regional heat losses.

$$Qtotal = Qins + Qslab + Qsupt + Qmanhole \quad (C.1)$$

Because of the huge varieties of geometries and fluids, taking a strict theoretical approach to calculation of all possible heat loss rates will result in a very complex procedure. The majority of tank heating applications do not require such precision. The following equations will provide a conservative solution for vessel heat loss.

C.1 Insulation heat-loss (Qins)

The heat loss thru the insulated vessel wall (Qins) is calculated with the following equation. The worst case heat loss assumption is made—that the vessel is full. Calculations for partially filled tanks are beyond the scope of this appendix. In addition, the fluid film layer on the inside of the tank wall is ignored.

$$Q_{ins} = \left(\frac{T_p - T_a}{\frac{1}{h_i} + \frac{x}{k} + \frac{1}{h_{co}} + \frac{1}{h_o}} \right) A \quad (C.2)$$

where:

Q_{ins} heat loss for region (W, Btu/h)

A tank surface area of insulated region (m^2, ft^2)

T_p maintain temperature (°C, °F)

T_a minimum ambient temperature (°C, °F)

x thermal insulation thickness (m, ft)

k thermal insulation conductivity at mean temperature (W/m °C, Btu/h · ft · °F)

h_i inside air contact coefficient from tank to inside insulation surface ($W/m^2 \cdot °C$, $Btu/h \cdot ft^2 \cdot °F$)

h_{co} inside air contact coefficient from insulation outer surface to weather barrier ($W/m^2 \cdot °C$, $Btu/h \cdot ft^2 \cdot °F$)

h_o outside air film coefficient from weather barrier or insulation outer surface to ambient ($W/m^2 \cdot °C$, $Btu/h \cdot ft^2 \cdot °F$)

Copyright © 2000 IEEE. All rights reserved.

Copyright The Institute of Electrical and Electronics Engineers, Inc.
Provided by IHS under license with IEEE
No reproduction or networking permitted without license from IHS
Not for Resale

C.2 Slab surface areas (Qslab)

If a tank rests directly on a concrete slab then the heat loss through the bottom of the tank and the concrete slab is calculated in a similar fashion to "wet" areas. For slabs, the term T_{slab} is taken to be the temperature at the slab soil interface and it replaces the minimum ambient temperature (Ta). Unfortunately, this temperature varies depending on the location under the slab because of the influence of two separate temperatures; the minimum ambient and the deep soil (Tsoil). The temperature near the edge of the slab will generally be lower than the temperature near the middle because the minimum ambient has more of an effect near the outer edges.

When computers are available, the preferred approach to calculating this temperature involves performing a simple numerical nodal temperature analysis for various locations along the slab-soil interface. This approach relies on the fact that at steady state, there will be no net heat transfer from any node and a series of simultaneous equations can be generated. These equations can then be solved for the temperature of each node using matrix math techniques. Once the temperature of each node is known, the following equation can be used to calculate the heat loss for that region of the slab:

$$Q_{node} = \left(\frac{T_p - T_{node}}{\frac{x_{wall}}{k_{wall}} + \frac{x_{slab}}{k_{slab}}} \right) A_{node} \qquad \text{(C.3)}$$

where:

Q_{node} heat loss for slab region between nodes (W, Btu/h)

A_{node} surface area of region between nodes (m^2, ft^2)

T_p maintain temperature (°C, °F)

T_{node} calculated nodal temperature (°C, °F)

x_{slab} thickness of concrete slab (m, ft)

k_{slab} concrete thermal conductivity at mean temperature (W/m · °C, Btu/h · ft · °F)

x_{wal} tank wall thickness (m, ft)

k_{wal} tank wall conductivity at mean temperature (W/m · °C, Btu/h ft · °F)

The total heat loss through the slab would then be obtained by summing the nodal heat losses.

There are several analytic alternatives to the computerized nodal temperature analysis approach discussed above. The analytic approach is usually based on breaking the slab heat loss into two components as follows:

a) The outer region, which treats concrete slab as a fin; see Equation C.4.

b) The inner region, which uses an equation similar to Equation C.3.

Typically, the analytic method will yield higher heat losses than the nodal method.

Copyright © 2000 IEEE. All rights reserved.
Copyright The Institute of Electrical and Electronics Engineers, Inc.
Provided by IHS under license with IEEE
No reproduction or networking permitted without license from IHS
Not for Resale

C.3 Support heat-loss (Qsupt)

Supports or any other appurtenances which are in contact with the tank wall and extend through the thermal insulation are treated as infinite fins and their heat loss is calculated using the generalized form of the fin equation as follows:

$$Q_{supt} = \sqrt{h_f P k_s A_c}(T_p - T_a)\varepsilon \quad \text{(C.4)}$$

where

Q_{supt}	heat loss for individual support (W/m, Btu/h · ft)
A_c	cross sectional area of the section which protrudes through the thermal insulation (m^2, ft^2)
P	perimeter of "A" above (m, ft)
T_p	maintain temperature (°C, °F)
T_a	minimum ambient temperature (°C, °F)
k_s	thermal conductivity of support (W/m · °C, Btu/h · ft · °F)
h_f	convection coefficient from exposed support surface to ambient (W/m^2 · °C, Btu/h · ft^2 · °F)
ε	efficiency of fin. This is a user definable value. In most cases it should be set to 1.0.

C.4 Manhole heat-loss (*Qmanhole*)

If manholes or hand holds are in contact with the fluid, then their heat loss can be determined by using E

quation C.1. If they are not in contact with the fluid, they can safely be ignored.

C.5 Convection coefficient equations

Convection coefficients are difficult to accurately predict because of the wide variety of geometric and fluid conditions encountered with tank heating. Fortunately, for insulated tanks, the effect that many of the coefficients have on overall heat loss is quite small. In order to simplify calculation of these coefficients, only three equations are used. Note that heat transfer due to radiation is included in the convection coefficient calculation, thus yielding an "effective" heat transfer coefficient.

C.5.1 Free convection, nonfluid surface, any orientation (h_i, h_{co}, h_o)

It is assumed that free (or natural) convection will take place whenever the wind speed is less than 0.45 m/s (1 mph) or the surface is enclosed. This is used for h_i and h_{co} for all cases and for h_o when the wind speed is below 0.45 m/s (1 mph). The equation is based on the vertical wall convection model using constants as presented by Holman [B12] as follows:

Copyright © 2000 IEEE. All rights reserved.

Copyright The Institute of Electrical and Electronics Engineers, Inc.
Provided by IHS under license with IEEE
No reproduction or networking permitted without license from IHS
Not for Resale

$$h_{free}= \left(\frac{.1\left[\left[\frac{g(T_w - T_\infty)L^3}{V_{air}{}^2 T_f}\right]Pr\right]^{1/3} k_{air}}{L} + h_r \right) \quad \text{(C.5)}$$

where

h_{free} effective free convection coefficient (W/m^2 · °C, Btu/h · ft^2 · °F)

k_{air} thermal conductivity of air evaluated at the mean film temperature (W/m · °C, Btu/h · ft · °F)

L characteristic length (m, ft). Defined as:
vertical cylinders: height /2
horizontal cylinders: diameter /2
rectangular: height /2
spherical: diameter /2

g acceleration of gravity (m/s^2, ft/s^2)

T_w wall temperature (°C, °F)

T^∞ bulk air temperature (°C, °F)

T_f mean film temperature. ($T_w - T^\infty$)/2

v_{air} kinematic viscosity of air evaluated at the mean film temperature (m/s^2, ft/s^2)

Pr Prandtl number of air at the mean film temperature (dimensionless)

h_r radiation component (see Equation C.7).

C.5.2 Forced convection, any orientation (h_o)

It is assumed that forced convection will take place whenever the wind speed is greater than 0.45 m/s (1 mph). This is used for h_o when the wind speed is greater than 0.45 m/s (1 mph). The equation is based on the average flat plat model as presented in Appendix F-6 of Becker [B6].

$$h_{forced}= \left(\frac{\mathrm{Pr}^{1/3}\left[\left[.037\frac{VL}{v_{air}}\right]^{.8} - 871\right]k_{air}}{L} + h_r \right) \quad \text{(C.6)}$$

where

h_{forced} effective forced convection coefficient (W/m^2 · °C, Btu/h · ft^2 · °F)

k_{air} thermal conductivity of air evaluated at the mean film temperature (W/m · °C, Btu/h · ft · °F)

L characteristic length (m, ft). Defined as:
vertical cylinders: (height + diameter)/2
horizontal cylinders: (length + diameter)/2
rectangular: (length + width)/2
spherical: diameter/2

Copyright © 2000 IEEE. All rights reserved.
Copyright The Institute of Electrical and Electronics Engineers, Inc.
Provided by IHS under license with IEEE
No reproduction or networking permitted without license from IHS
Not for Resale

V wind velocity (m/s, ft/s)

ν_{air} kinematic viscosity of air evaluated at the mean film temperature (m/s^2, ft/s^2)

Pr Prandtl number of air at the mean film temperature (dimensionless)

h_r radiation component (see Equation C.7).

C.5.3 Radiation component, all coefficients (h_f, h_i, h_{co}, h_o)

Heat transfer from radiation is added to the pure convection value to arrive at an effective convection coefficient. The simplified equation for radiation as present in Annex A, Equation A.11 of IEEE 515-1997 [B14], is used.

$$h_r = 4\sigma\varepsilon T_m^{\ 3} \tag{C.7}$$

where

h_r linearized radiation heat-transfer coefficient ($W/m^2 \cdot °C$, $Btu/h \cdot ft^2 \cdot °F$)

σ $5.669 \cdot 10^8$ ($W/m^2 \cdot K^4$)
$0.1714 \cdot 10^8$ ($Btu/h \cdot ft^2 \cdot °R^4$) Stefan-Boltzmann constant

ε emissivity of radiating surface (dimensionless)

T_m the estimated mean absolute temperature between the surroundings and the radiating surface (K, °R)

$$T_m = T_0 + \frac{T_1 + T_2}{2} \tag{C.8}$$

where

T_1 surface temperature of cylinder (°C, °F)

T_0 273 °C or 460 °F, constant converting temperature (°C, °F) to absolute temperature (K, °R)

T_2 temperature of media surrounding the cylinder (°C, °F)

Copyright © 2000 IEEE. All rights reserved.

Copyright The Institute of Electrical and Electronics Engineers, Inc.
Provided by IHS under license with IEEE
No reproduction or networking permitted without license from IHS
Not for Resale

Annex D

(informative)

Heat-up considerations

In certain plant operations, it may be necessary to specify that the heat-tracing system be capable of raising the temperature of a stagnant product to pumping temperature within a certain time period. Equation D.1 gives the relationship between heat-up time and heating device input for a pipe.

$$t = H \cdot 1n\left[\frac{q_c - U(T_i - T_a)}{q_c - U(T_f - T_a)}\right] + \frac{P_1 V_{c1} h_f}{q_c - U(T_{sc} - T_a)} \tag{D.1}$$

where:

U heat loss per unit length of pipe per degree of temperature difference

$$q = \frac{(T_p - T_a)}{\frac{1}{\pi D_1 h_i} + \frac{1n(D_2/D_1)}{2\pi K_1} + \frac{1n(D_3/D_2)}{2\pi K_2} + \frac{1}{\pi D_3 h_{co}} + \frac{1}{\pi D_3 h_o}} \tag{D.2}$$

where:

H the thermal time constant, which is the total energy stored in the mass of pipe, fluid, and insulation per degree of temperature divided by the heat loss per unit length per degree temperature differential

$$H = \frac{P_1 C_{p1} V_{c1} + P_2 C_{p2} V_{c2} + 0.5 P_3 C_{p3} V_{c3}}{U} \tag{D.3}$$

and

P_1 density of product in pipe (kg/m^3, lb/ft^3)

C_{p1} specific heat of the product (J/kg · °C, Btu/lb · °F)

V_{c1} internal volume of pipe (m^3/m, ft^3/ft)

P_2 density of pipe (kg/m^3, lb/ft^3)

C_{p2} specific heat of the pipe (J/kg · °C, Btu/lb · °F)

V_{c2} pipe wall volume (m^3/m, ft^3/ft)

P_3 density of insulation (kg/m^3, lb/ft^3)

C_{p3} specific heat of the insulation (J/kg · °C, Btu/lb · °F)

V_{c3} insulation wall volume (m^3/m, ft^3/ft)

T_i initial temperature of the pipe (°C, °F)

T_f final temperature of the fluid and pipe (C, °F)

Copyright © 2000 IEEE. All rights reserved.
Copyright The Institute of Electrical and Electronics Engineers, Inc.
Provided by IHS under license with IEEE
No reproduction or networking permitted without license from IHS
Not for Resale

T_a	ambient temperature (°C, °F)
t	desired heat up time (s, h)
U	heat loss per unit length of pipe per degree of temperature (W/m · °C, Btu/h · ft · °F)
H	thermal time constant (s, h)
K_1	thermal conductivity of the inner insulation evaluated at its mean temperature (W/m · °C, Btu/h · ft · °F)
K_2	thermal conductivity of the outer insulation evaluated at its mean temperature (W/m · °C, Btu/h · ft · °F)
D_3	outside diameter of outer insulation layer (m, ft)
D_2	outside diameter of the inner insulation layer (m, ft)
D_1	inside diameter of the insulation layer (m, ft)
h_{co}	inside air contact coefficient of the weather barrier (W/m^2 · °C, Btu/h · ft^2 · °F)
h_o	outside air contact coefficient of the weather barrier to the ambient (W/m^2 · °C, Btu/h · ft^2 · °F)
h_i	inside air contact coefficient from the pipe to the inside insulation surface (W/m^2 · °C, Btu/h · ft^2 · °F)
T_{sc}	temperature at which phase change occurs (°C, °F)
h_f	latent heat of fusion for the product (J/kg, Btu/lb)
q_c	heating cable output (W/m, Btu/h · ft)

The preceding relationships also assume that system densities, volumes, thermal conductivities, and heat losses are constant over the temperature range of interest. Note that some products do not undergo a phase change during heat up. Although the model is representative of a straight pipeline, it does not have provisions for equipment such as pumps and valves.

Copyright © 2000 IEEE. All rights reserved.

Copyright The Institute of Electrical and Electronics Engineers, Inc.
Provided by IHS under license with IEEE
No reproduction or networking permitted without license from IHS
Not for Resale

Annex E

(informative)

Method to determine equivalent thicknesses of insulating cements

Given: A pipe insulated with 25.4 mm (1 in) (actual thickness) mineral wool having a thermal conductivity of 0.0447 W/m · °C at 37.8 °C (100 °F) mean (0.31 Btu in/h . ft2 · °F).

Find: The proper thickness of the insulating cement which has been reported by the manufacturer to have a thermal conductivity of 0.0706 W/m · °C at 37.8 °C (100 °F) mean (0.49 Btu in/h · ft2 · °F).

Solution:

English units:

$$\frac{K_{ins}}{K_{cement}} = \frac{t_{ins}}{t_{cement}} \tag{E.1}$$

$$\frac{0.31}{0.49} = \frac{1}{t_{cement}} \tag{E.2}$$

$$t_{cement} = 1.58 \text{ in} \tag{E.3}$$

Metric units:

$$\frac{K_{ins}}{K_{cement}} = \frac{t_{ins}}{t_{cement}} \tag{E.4}$$

$$\frac{0.0447}{0.0706} = \frac{25.4}{t_{cement}} \tag{E.5}$$

$$t_{cement} = 40.1_{mm} \tag{E.6}$$

For comprehensive reference information on thermal insulation, see Malloy [B22]. For information on standard dimensions and installation practices for thermal insulation, see ASTM C450-99 [B2] and ASTM C585-90 [B3].

Copyright © 2000 IEEE. All rights reserved.
Copyright The Institute of Electrical and Electronics Engineers, Inc.
Provided by IHS under license with IEEE
No reproduction or networking permitted without license from IHS
Not for Resale

Annex F

(informative)

Induction heating

F.1 Theory of induction heating

The induction heating coil may be thought of as the primary winding of a transformer. The vessel being heated is a shorted, one-turn secondary winding.

Circulating currents (eddy currents) induced in the vessel wall account for a majority of the heat generated. The power is proportional to the square of the current and the resistance of the current path.

Some heating is due to hysteresis in magnetic materials. The alternating magnetic flux causes heating proportional to the area of the hysteresis loop. This is a small part of the total heat generated by fields with frequencies less than 1000 Hz.

Table F.1—Effect of change of parameters on induction heating

Increase of	Symbol	Power	Efficiency	Power factor
Voltage	V	Increase	—	—
Ampere turns	NI	Increase	—	—
Frequency	F	Increase	Increase	Decrease
Work resistivity	ρ	Increase	Increase	Increase
Work permeability	μ	Increase	Increase	Increase
Saturation flux density	ßs	Increase	—	—
Flux penetration	P	Decrease	—	—
Coil length	L	Increase	—	—
Number of turns/coil length	N/L	—	Increase	Increase
Work diameter	D_w	Increase	—	—
Coil diameter/work diameter	D_c/D_w	Decrease	Decrease	Decrease

F.2 Calculation of effective flux penetration

$$P = C\sqrt{\frac{\rho}{\mu_f}} \text{ (m or ft)} \qquad \text{(F.1)}$$

Copyright © 2000 IEEE. All rights reserved.

Copyright The Institute of Electrical and Electronics Engineers, Inc.
Provided by IHS under license with IEEE
No reproduction or networking permitted without license from IHS
Not for Resale

where

P	penetration
C	50.4 for P in m (165.3 for P in ft)
ρ	vessel wall resistivity in Ω cm
μ	permeability in G/Øe
f	frequency in Hz

Table F.2—Wall thickness for effective induction heating of nonmagnetic metals

Frequency (Hz)	Minimum wall thickness	
	(cm)	(in)
60	2.5	1
180	1.6	0.625
540	1.0	0.375
1 000	0.6	0.25
10 000		
NOTE—The minimum thickness will be less for highly conductive materials, such as copper and aluminum.		

NOTE—See Clause 9 for general information on induction heating of pipelines and vessels, see 4.2 for induction heating system testing requirements. For additional reference information on induction heating see Erickson [B9], Kesavamurthy and Rajagopalan [B18], Kraus [B19], Lavers [B21], and Simpson [B29].

Copyright © 2000 IEEE. All rights reserved.
Copyright The Institute of Electrical and Electronics Engineers, Inc.
Provided by IHS under license with IEEE
No reproduction or networking permitted without license from IHS
Not for Resale

Annex G

(informative)

Induction susceptor heating furnaces within a vessel specifications (To be developed by user and supplier)

G.1 One complete system for induction heating of a (vacuum/pressurized) furnace with dimensions as illustrated on attached drawings:

_____ Overall enclosure
_____ Susceptor
_____ Load chamber
_____ Equipment layout space

G.2 Major equipment covered by this specification shall include the following:

— Induction coil assembly with accessories and support provisions
— Magnetic shunts with support provisions
— Susceptor
— Containment vessel with process and electrical ports
— Power connection assembly from power generator to containment vessel with accessories and support provisions
— Power generator with service input section, control and monitoring section, induction generator and power output transition section

G.3 Services

G.3.1 Electrical service

User will provide a _____ V, three phase, _____ Hz supply of a kVA capacity as required by the system. Service will be protected by a user provided (circuit breaker/fused switch) of a proper rating to protect the user provided feeder to the system.

User's service transformer will be _____ kVA, _____ kV-_____ /_____ V, three-phase, Hz, (delta/wye) primary, (delta/wye) secondary windings, with secondary neutral (if any) (solidly grounded/high resistance grounded/ungrounded), located _____ (meters/feet) from the generator entrance compartment. Neutral (is/is not) available.

G.3.2 Water supply

User will provide a cooling water supply with the characteristics required by the induction heating equipment vendor. It is the vendors responsibility to specify maximum ranges for the following:

Copyright © 2000 IEEE. All rights reserved.

Copyright The Institute of Electrical and Electronics Engineers, Inc.
Provided by IHS under license with IEEE
No reproduction or networking permitted without license from IHS
Not for Resale

— Flow _____ LPM (_____ GPM)
— Supply pressure _____ to _____ Pa (_____ to _____ psi)
— Entrance temperature _____ to _____ °C (_____ to _____ °F)
— Acidity _____ to _____ pH
— Conductivity _____ to _____ micromhos/cm
— Freeze Protection (yes/no)
— Dissolved solids _____ PPM _____ Undissolved Solids _____ PPM

G.4 Responsibilities

G.4.1 Vendor to supply

— Major equipment assemblies as previously detailed
— Packaging and special handling accessories
— Special tools
— Special testing instrumentation

G.4.2 User to supply

— Common tools
— Equipment lifting and handling devices
— Journeyman electricians, millwrights, and riggers as required
— All permanent or temporary services required for equipment testing and operation
— Common test instrumentation

G.5 Coil Assembly

G.5.1

Coil shall be constructed of seamless copper tubing, with brazed or welded joints, of proper size for ampacity and cooling water requirements.

G.5.2 Dimensions

— Approximate length _____ m (_____ ft)
— Minimum inside diameter of _____ m (_____ ft)
— Maximum outside diameter of _____ m (_____ ft)

G.5.3

Coil may be divided electrically into a number of zones required to give user's specified temperature distribution in the load zone. Electrical connections for each zone are to be brought out of the vessel through (one/separate) ports in the vessel.

G.5.4

Water inlet and outlet connections are to be provided for each zone.

Copyright © 2000 IEEE. All rights reserved.
Copyright The Institute of Electrical and Electronics Engineers, Inc.
Provided by IHS under license with IEEE
No reproduction or networking permitted without license from IHS
Not for Resale

G.5.5

Coil shall be fully insulated to withstand twice the peak operating voltage plus 1000 V, both turn-to-turn and from coil to ground, in an atmosphere as specified. Leakage current to ground under all conditions shall be less than _____ milliamps. Insulation shall be compatible with the atmosphere in which it is to be used for a service life of _____ years.

G.5.6

Coil supports shall be made from an insulating material with enough strength to support the coil (vertically/ horizontally) under all possible conditions of operation.

G.5.6.1

Provisions shall be made for fastening the supports to a support structure inside the vessel. Provisions shall be made for adjusting the coil laterally and lengthwise within the vessel.

G.5.6.2

Each coil turn shall be fastened to each support to maintain all coil turns in relative position under all possible conditions of operation. To assure coil is circular (when susceptor is cylindrical), inside diameter of coil measured at any place in the coil shall be within +/– 0.25% of the mean diameter.

G.5.6.3

The coil shall be braced so that magnetically induced sound pressure level at full power shall not exceed _____ dBA when measured 1 m (3 ft) from the outside of the vessel.

G.5.7

High conductivity shading rings shall be provided for ends of coil to intercept end leakage flux if required to minimize heating of vessel and supports.

G.6 Susceptor

G.6.1

Coil shall induce power in a _____ susceptor to be furnished by vendor to provide user's required load power and temperature mapping.

G.6.1.1

Susceptor shall have an overall temperature profile when operating at a surface temperature of _____ °C (_____ °F) of +/– _____ °C (_____ °F), at all points on the surface no nearer than _____ mm (_____ in) of either end.

G.6.2

Provisions to be made for supports to mount susceptor coaxially in coil.

G.6.3

Susceptor end plates are to be furnished to reduce temperature end effects to acceptable limits.

Copyright © 2000 IEEE. All rights reserved.

Copyright The Institute of Electrical and Electronics Engineers, Inc.
Provided by IHS under license with IEEE
No reproduction or networking permitted without license from IHS
Not for Resale

G.6.4

Load is to be mounted inside the susceptor on supports furnished by vendor to locate the load in center of the susceptor, and as shown on attached drawing number _____ .

G.6.4.1

Load has the following characteristics (by user):

— Dimensions as shown on attached drawing number _____ .
— Total weight _____ kg (_____ lb).
— Specific heat _____ j/kg · °C (_____ Btu/lb · °F).
— Density _____ kg/m^3 (_____ lb/ft^3).

G.6.5 Process (By user)

G.6.5.1

Process gas has the following characteristics:

— Type _____ Toxic: _____ (yes/no), Flammable: _____ (yes/no)
_____ %
_____ %
_____ %
_____ %
_____ %
_____ %
— Flow _____ kg/s (_____ lb/h)
— Density _____ kg/m^3 (_____ lb/ft^3) @ _____ °C (_____ °F)
— Temperature _____ maximum, _____ minimum _____ °C (_____ °F)
— Auto ignition temperature _____ °C(_____ °F)
— Maximum pressure _____ Pa (_____ psi)

G.6.5.2 Vacuum

— Minimum pressure _____ Pa (_____ Torr)

G.6.5.3 Air

— Maximum Pressure _____ Pa (_____ psi)
— Flow _____ kg/s (_____ lb/h)
— Temperature _____ maximum, _____ minimum _____ °C (_____ °F)
— Quality (instrument/filtered/dried/ambient)

G.7 Thermal insulation

G.7.1

Coil shall be separated from the susceptor by a layer of thermal insulation of sufficient thickness to minimize losses and to prevent coil and vessel heating beyond prescribed maximums. A safety factor appropriate to the application is to be allowed for insulation degradation.

Copyright © 2000 IEEE. All rights reserved.
Copyright The Institute of Electrical and Electronics Engineers, Inc.
Provided by IHS under license with IEEE
No reproduction or networking permitted without license from IHS
Not for Resale

G.7.2

Insulation shall have a temperature rating compatible with maximum achievable susceptor surface temperature under normal operating conditions at full power.

G.7.3

Vendor shall select insulation with full attention to the compatibility with the atmosphere in which it is to be used.

G.7.4

Vendor is to provide a thermal conductivity (k) versus temperature curve for the selected insulation.

G.8 Magnetic yokes (shunts)

G.8.1

Yokes shall be provided to minimize power loss and assure that vessel wall does not reach a temperature which creates a hazard to operating personnel or which compromises the functionality of the vessel and associated equipment when operating at maximum specified temperature for a prolonged period.

G.8.2

Laminations shall be protected against corrosion in the expected furnace atmosphere.

G.8.3

Yokes shall be supported in the space between the coil and vessel wall in locations to provide optimum interception of magnetic flux. Supports to be located to minimize any circulating currents and associated hot spots.

G.8.4

Laminations shall be compressed and held to minimize vibration and associated noise. Vendor to specify compression torque required.

G.9 Containment vessel

G.9.1

Vessel shall have overall dimensions as shown on attached drawing number _____ , and shall have supports for mounting in the (vertical/horizontal) position.

G.9.2

Vessel shall have inner supports for magnetic yokes (if required), coil, insulation, susceptor, and load to be processed.

Copyright © 2000 IEEE. All rights reserved.

Copyright The Institute of Electrical and Electronics Engineers, Inc.
Provided by IHS under license with IEEE
No reproduction or networking permitted without license from IHS
Not for Resale

G.9.3

Vessel shall have flanged process gas or vacuum nozzles as follows, located where shown on the attached drawing:

— _____ mm (_____ in) rated Pa (_____ psi) located on (top/bottom/side/end).
— _____ mm (_____ in) rated Pa (_____ psi) located on (top/bottom/side/end).
— _____ mm (_____ in) rated Pa (_____ psi) located on (top/bottom/side/end).
— _____ mm (_____ in) rated Pa (_____ psi) located on (top/bottom/side/end).

G.9.4

Vessel shall have connection port assembly(ies) (see G.10) for electrical and water service to the furnace, to be sized and located by vendor.

G.9.5

Vessel material shall be _____ . Walls and ends shall be _____ mm (_____ in) thick.

G.9.6

Vessel shall have an (ASME/IEC Std) pressure vessel rating for _____ Pa (_____ psi).

G.10 Connection port assembly(ies)

G.10.1

Flanged opening(s) in the vessel wall of the required pressure rating.

G.10.2

Assembly shall provide an interface between coil electrical and water connections and power connection assembly.

G.10.3

Screening shall be provided if required to minimize heating of the vessel port(s) by induction from the high frequency currents being transported.

G.10.4

Any special tools required to make connections shall be provided.

G.10.5

Provisions shall be made in the design of the assembly to allow the coil assembly to be removed lengthwise when one vessel end is removed.

Copyright © 2000 IEEE. All rights reserved.
Copyright The Institute of Electrical and Electronics Engineers, Inc.
Provided by IHS under license with IEEE
No reproduction or networking permitted without license from IHS
Not for Resale

G.11 Power connection assembly

G.11.1

Assembly shall contain electrical connections from the power supply output to the connection port assembly of sufficient ampacity to carry the maximum design coil current(s) with a temperature rise not to exceed 40 °C (72 °F).

G.11.2

Assembly shall contain water connections from the power supply output to the connection port assembly of a size adequate to carry sufficient water to cool the power connection assembly and the induction coil(s).

G.11.3

Provisions shall be made for flexibility in end connection for both electrical and water connections for ease of fit-up.

G.11.4

Electrical conductors shall be arranged to minimize circuit inductance and associated losses.

G.11.5

Physical arrangement to be selected by vendor. Options are as follows:

G.11.5.1

Water cooled insulated hollow cables with water circulated in the interior. The insulation shall be suitable for rough usage and conductor temperature. These may either be single conductors bundled together, or coaxial cables to minimize inductance.

G.11.5.2

0A bus assembly with flanges to match vessel and power supply ports. Bus enclosure shall be a nonmagnetic metal suitable for the service. If called for, the enclosure shall be sealed and gasketed to maintain a positive pressure of 24.9 Pa.[14] Water may be circulated through metal tubes attached to the bus bars for cooling to maintain specified temperature.

G.11.5.3

Attached drawing number _____ gives proposed locations for the vessel and power supply. User and vendor will reach final agreement on location as design is advanced.

[14] 24.9 Pa = 0.1 in of water column.

Copyright © 2000 IEEE. All rights reserved.

Copyright The Institute of Electrical and Electronics Engineers, Inc.
Provided by IHS under license with IEEE
No reproduction or networking permitted without license from IHS
Not for Resale

G.12 Power supply

G.12.1 Enclosure(s)

G.12.1.1

Enclosure(s) shall be free standing, floor mounted and suitable for the area in which it is installed. Metallic isolation barriers shall be provided between separate compartments for the main switch, generator, power output section, and control section. Each compartment shall have a lockable door. Doors shall be interlocked to comply with all applicable applicable codes and standards.

G.12.1.2

Enclosure(s) are to be rated (NEMA/IEC) _____. Provisions (shall/shall not) be made for user's purging at nominal pressure or 24.9 Pa.[7]

G.12.1.3

Enclosure(s) will be installed in an area electrically classified as follows:

— General purpose

— Class _____ , Division _____ , Group _____

— Class _____ , Zone _____ , Group _____

G.12.1.4

Isolation valves shall be provided in the water system circuits external to the power supply to allow for individual replacement of failed devices.

G.12.2 Main disconnect

G.12.2.1

Switch shall be three pole load break switch, or circuit breaker, _____ V, rated to carry maximum power cabinet supply amperes continuously. It is preferred that the switch not be water cooled.

G.12.2.2

Switch handle shall be in the door and be lockable in the "off" position. Switch shall be installed in accordance with all applicable local codes and standards. An insulating barrier shall be provided over the line side terminals of the switch. Switch shall have connecting lugs or copper bus bars for user's _____ mm (_____ kcmil) copper cables, _____ per phase. A minimum of _____ mm (_____ in) space shall be provided between removable gasketed plate on (top/bottom) of compartment to switch for training user's cables. Voltage suppression shall be provided across each phase to minimize voltage surges from user's system. This suppression shall be sized to dissipate available energy repetitively.

Copyright © 2000 IEEE. All rights reserved.
Copyright The Institute of Electrical and Electronics Engineers, Inc.
Provided by IHS under license with IEEE
No reproduction or networking permitted without license from IHS
Not for Resale

G.12.3 Induction generator

G.12.3.1

Converts input power from main switch compartment to output suitable for powering the induction coil. Bus connections to be provided between compartments. Vendor to specify maximum output kW and kVA, and frequency range. Output voltage to be controlled from 0 to _____ V (selected by vendor). Converter shall have all necessary circuitry to control output voltage in response to a signal from the control compartment. Converter to have built-in protection and shutdown interlocks for self protection.

G.12.3.2

Water connections to the power output compartment are to be provided, if devices in the generator use water cooling.

G.12.4 Power output

This compartment shall contain all the equipment necessary to take the full power output of the generator, change the voltage to that required for the coil(s), provide a tank circuit as required to match coil load, and provide individual control to adjust output to each zone separately. Output circuit shall be isolated from ground in accordance with all applicable local codes and standards.

G.12.4.1 Isolation transformer

A two winding isolation transformer with a kVA rating to transmit full generator power continuously to the coil(s) shall be provided. This transformer may be connected to either the input or output of the power supply.

G.12.4.2 Output control

Contactors may be provided if required to change the output voltage level in at least two steps to match changing load requirements. The contactors shall be suitable for use on the voltage, current, and frequency they will switch. They shall be electrically and mechanically interlocked so that they cannot be switched when the transformer is energized, and more than one can never be closed. Operating coils shall be rated _____ V, _____ Hz.

G.12.4.3 Output switches

If it is intended that the coil be divided into more than one zone, switching means shall be provided to individually control output to each zone. Overvoltage protection, if required, shall be provided to minimize peak voltage across the switching means. Switching means may be water cooled.

G.12.4.4 Capacitors

Capacitors may be required for tank circuit tuning or power factor correction. Vendor shall select voltage and kvar rating. Tap arrangements shall be provided if required to enable field to match load. Capacitors may be water cooled. Capacitor installation shall comply with all applicable local codes and standards.

G.12.4.5 Voltage suppression to ground

Voltage suppression shall be provided on each zone individually if required to minimize voltage surges in the tank circuit when the zone is disconnected from the power supply. This suppression shall be sized to dissipate available energy repetitively.

Copyright © 2000 IEEE. All rights reserved.

Copyright The Institute of Electrical and Electronics Engineers, Inc.
Provided by IHS under license with IEEE
No reproduction or networking permitted without license from IHS
Not for Resale

G.12.4.6 Output connections

Output connections shall be provided to match both the electrical and water connections in the power connection assembly. If this assembly is bused in an enclosure, a flanged opening shall be provided to match the assembly flange. The flange shall be braced to support the full weight of the power connection assembly.

G.12.5 Water connections

Water connections shall be provided for the complete system. Separate cooling water circuits shall be provided for coils, capacitors, transformers, power connections, switching devices, generator, etc. Fittings for user's supply and drain connections shall be (metric/English).

G.12.6 Control compartment

G.12.6.1

The power conversion to control voltages and control interface between the converter and the local and remote controls shall be grouped in this compartment. No control devices accessible to operators shall have in excess of _____ V on them.

G.12.6.2

The compartment door shall be lockable if required by local codes. The door must be opened to operate all control circuit disconnect devices and to access fuses and terminal blocks. There shall be an insulating barrier over all line side live parts which are accessible when the door is open.

G.12.6.3

Control power and potential transformers shall be dry type, _____ – _____ V, _____ Hz, with capacity as required. Vendor shall provide current limiting type fuses in each ungrounded transformer primary lead. One side of transformer secondary winding shall be solidly grounded.

G.12.6.4

Circuit breakers shall be _____ V, ampere rating as required, two or three poles as required, with amperes symmetrically interrupting capacity. Circuit breakers shall be lockable in the off position.

G.12.6.5

Control relays shall be _____ pole, (hard wired/plug-in) type.

G.12.6.6

Meters shall be (analog/digital) type with +/– 2% accuracy.

G.12.6.7

The following devices shall be accessible with the compartment door closed. The following lists are examples. Actual devices required will be specified in the contract between the user and the vendor.

NOTE— User to check devices required on the system.

G.12.6.7.1 Operators

Copyright © 2000 IEEE. All rights reserved.
Copyright The Institute of Electrical and Electronics Engineers, Inc.
Provided by IHS under license with IEEE
No reproduction or networking permitted without license from IHS
Not for Resale

— Switch (hand/key) operated, maintained contact.
— Frequency power (FP) "on" switch, momentary contacts, operable in "local and remote."
— FP "off" switch, momentary contacts, operable in "local" mode only.
— Ground fault test switch, momentary contact, key operated, FP power must be off.
— Reset switch, momentary contacts, operable in "local" mode only.
— Auxiliaries on switch, momentary contacts, operable in "local" mode only.
— Auxiliaries off switch, momentary contacts, operable in "local" mode only.
— Lamp test switch, momentary contacts, operable in "local" mode only.
— Output voltage hi-lo switch, maintained contacts, operable in "local" mode only.
— Generator voltage control potentiometer, operable in "local" mode only.
— One zone control potentiometer for each zone, operable in "local" mode only.

G.12.6.7.2 Indicating lights, _____ V

— Input power available, color
— Generator ready, color
— FP on, color
— Zone energized, one for each zone, color
— Water flow to coil, color
— Water flow to _____ , color _____
— Water flow to _____ , color _____
— Water flow to _____ , color _____
— Water flow to generator, color _____
— Auxiliaries on, color
— Local controls active, color
— Local controls active, color
— Generator fault, color

G.12.6.7.3 Meters

— Operating hours
— Output power, kW
— Output volts
— Output amperes
— Output frequency
— Ground leakage current, dual scale setting
— Input voltage, 3 m or three-position switch and 1 m
— Input amperes, 3 m or three-position switch and 1 m
— Input power, kW
— Input kilowatt hours, kWh
— Input reactive power, kvar
— Input power factor, PF
— Generator water outlet temperature

--`,,```,,,,````-`-`,,`,,`,`,,`---
Copyright © 2000 IEEE. All rights reserved.

Copyright The Institute of Electrical and Electronics Engineers, Inc.
Provided by IHS under license with IEEE
No reproduction or networking permitted without license from IHS
Not for Resale

G.12.6.8

Terminal blocks shall be accessible from front of cabinet. Control and signal terminal blocks shall be segregated. Control and signal wiring shall be isolated by vendor inside compartment. Vendor shall provide separate raceways, with snap-on covers, to terminal blocks for user's control and signal wiring.

G.12.6.9

User's interface from remote control will be typically as outlined in following example. Actual devices required will be specified in the contract between the user and the vendor.

G.12.6.9.1

User will supply the following operating signals and dry contacts for use on _____ V circuits.

- Frequency power (FP) "on" switch, momentary contacts, operable in "remote" mode only
- FP "off" switch, momentary contacts, operable in "local and remote" modes
- Ground fault test switch, momentary contact, key operated, FP power must be off
- Reset switch, momentary contacts, operable in "remote" mode only
- Auxiliaries on switch, momentary contacts, operable in "remote" mode only
- Auxiliaries off switch, momentary contacts, operable in "remote" mode only
- Emergency stop switch, momentary contacts, normally closed, operable in "local and remote" modes
- Output voltage hi-lo switch, maintained contacts, operable in "remote" mode only

G.12.6.9.2

User will supply following (analog/digital) signals with the following characteristics for the following functions:

- Generator voltage control, operable in "remote" mode only
- One zone power control for each zone, operable in remote mode only

G.12.6.9.3

Vendor shall supply following operating signals, dry contacts normally open, for use on volt circuits, to indicate the following (contact closure indicates condition noted):

- Input power available
- Generator ready
- FP on
- Zone energized, one for each zone
- Water flow to coil
- Water flow to
- Water flow to generator
- Auxiliaries on
- Remote controls active
- Generator fault
- Air purge on

Copyright © 2000 IEEE. All rights reserved.
Copyright The Institute of Electrical and Electronics Engineers, Inc.
Provided by IHS under license with IEEE
No reproduction or networking permitted without license from IHS
Not for Resale

G.12.6.9.4

Vendor shall supply following (analog/digital) signals with the following characteristics for the following functions:

— Generator output voltage
— Generator output kW

G.13 Testing

G.13.1 Factory acceptance checkout tests

G.13.1.1 Equipment covered

— Power supply
— Power connections
— Coil assembly and accessories
— Functional controls and monitoring devices

G.13.1.2 Objectives

— Inspect equipment visually.
— Review vendor's test data.
— Demonstrate functional operation of equipment.
— Demonstrate full power stability for _____ h.
— Prepare "punch list" for correction before shipment.

G.13.1.3 Responsibilities

Vendor has full authority over safe operation of equipment and should appoint an engineer to be responsible for the tests. Equipment performance shall be demonstrated by vendor personnel. Where hands-on checkout is desired, user's personnel may operate the equipment when specifically authorized by the vendor's test engineer.

G.13.1.4 Preparation

G.13.1.4.1

A test schedule shall be prepared by vendor in consultation with user in advance of test. A set of layout and wiring diagrams of the equipment being tested shall be available. All changes found necessary and discrepancies shall be marked on a single designated set of these drawings and itemized in a report.

G.13.1.5 Mechanical fit up

Vendor to demonstrate mechanical fit-up of all equipment.

Copyright © 2000 IEEE. All rights reserved.

Copyright The Institute of Electrical and Electronics Engineers, Inc.
Provided by IHS under license with IEEE
No reproduction or networking permitted without license from IHS
Not for Resale

G.13.1.6 Necessary services

Services necessary to operate the equipment and conduct tests shall be supplied by vendor. These shall include, but are not limited to: electrical supplies of required voltage, phase and kVA to operate all equipment; any air supplies necessary to pressurize or operate equipment; cooling water; and temporary supports as required.

G.13.1.7 Safety

G.13.1.7.1

Disconnect switches and valves for electrical, air, and water supplies shall be accessible and clearly marked. Instructions shall be given to all participants for methods of operating switches and valves.

G.13.1.7.2

Portable fire extinguishers, Halon or carbon dioxide, shall be available.

G.13.1.7.3

Electrically energized portions of the system shall be insulated or isolated from inadvertent touch.

G.13.1.7.4

Exposed noncurrent carrying metal parts of the equipment shall be grounded.

G.13.1.7.5

Surfaces likely to exceed 60 °C (140 °F) during the tests shall be insulated or isolated from inadvertent touch.

G.13.1.8

The following test instrumentation shall be supplied by the vendor. Calibration records shall be available. The following lists are examples. Actual devices required will be specified in the contract between the user and the vendor. User to check instrumentation required.

System metering:

- Instrumentation to measure cooling water flow and temperature rise
- Chart recorder to record inlet kilowatts, volts, and amperes
- Portable pyrometer with 0 –_____ °C (32 –_____ °F) range
- Temperature indicating tapes of various temperature ranges up to 100 °C (212 °F)
- 500 V megger
- Current generator for testing ground fault protective devices
- _____ signal generator for simulating remote control signals
- Chart recorder to record output signals
- DC hi-pot test set
- Digital multimeter

Copyright © 2000 IEEE. All rights reserved.
Copyright The Institute of Electrical and Electronics Engineers, Inc.
Provided by IHS under license with IEEE
No reproduction or networking permitted without license from IHS
Not for Resale

G.13.1.9 Visual inspection

G.13.1.9.1

All fuses, circuit breakers, and motor overloads will be checked for installation and correct setting. Vendor shall have on hand spare fuses to avoid delays during tests. A list, such as follows in Table G.1, should be available for review by user.

G.1—Overcurrent/overload protective device schedule

Part No.	Device	Type		Location	Circuit	Trip Set
CB3	BKR	Thermal magnetic	30A	Control compartment	Heaters	30A

G.13.1.9.2

Ground bonding will be inspected for continuity and compliance with all applicable local codes and standards.

G.13.1.9.3

Vendor shall have available meters, source of signals, and "on-off" switches for functional check of remote control capabilities.

G.13.1.9.4

Visual inspection to be made to assure equipment conforms with drawings. Any or all of the following checks may be required.

G.13.1.9.5 Power supply

- On cabinets check gaskets, rigidity, openings for electrical, water, and air services, and channels on base.
- Check that no carbon steel has been used in cooling water circuitry.
- Check that all wiring and terminal points are coded and keyed to wiring diagrams.
- Check that all wiring is neatly bundled or run in wireways. Check that signal wiring is run separately and isolated or shielded from power and control wiring
- Check that all wire connections are tight and equipment is fastened down.
- Check that bleed-down circuits are in accordance with national and international codes and regulations for capacitors.
- Check that door interlocks and limit switches operate correctly.
- Check that line side bus and circuit breaker terminals are insulated with a cover plate.
- Check all wiring for integrity.

G.13.1.9.6 Coil

- Perform dimensional check.
- Check all joints for integrity (X-ray, ultrasonic, helium, etc.)

Copyright © 2000 IEEE. All rights reserved.

Copyright The Institute of Electrical and Electronics Engineers, Inc.
Provided by IHS under license with IEEE
No reproduction or networking permitted without license from IHS
Not for Resale

— Hydraulic test. Coil to be pressurized to _____ Pa (_____ psi) and held for _____ h with no decline in pressure. Examine all brazed or welded connections visually.

— Perform hi-pot dielectric test with a maximum voltage of _____ V dc. Current leakage shall be less than _____ μA.

G.13.1.10 Preenergization Tests

— Check ability of equipment to hold pressure of _____ Pa (_____ psi).

— Perform megger tests from phase-to-ground.

— Input service with main switch closed.

— Each coil zone, disconnected from capacitors.

— Check operation of ground detector.

G.13.1.11 Functional Checkout

An operation check sheet shall be compiled during these tests.

G.13.1.11.1 Status of Equipment

— Main switch locked open.

— Cooling water valved off.

— Vendor to supply temporary _____ V, _____ Hz service to control system.

— Vendor to furnish any other services necessary for functional operation of the equipment.

G.13.1.11.2 Functional operation (local and remote)

G.13.1.11.2.1

List of equipment to be operated will be developed when final drawings are received.

G.13.1.11.2.2

Check the status of all indicators before and after each operation.

G.13.1.12 Water system checkout

G.13.1.12.1

Turn on cooling water to cabinets.

G.13.1.12.1.1

Visually check for leaks.

G.13.1.12.1.2

Check

— Water flows

— Pressure at inlet and outlet

— Temperature at inlet and outlet

Copyright © 2000 IEEE. All rights reserved.
Copyright The Institute of Electrical and Electronics Engineers, Inc.
Provided by IHS under license with IEEE
No reproduction or networking permitted without license from IHS
Not for Resale

G.13.1.12.2

Turn on cooling water to coils.

G.13.1.12.2.1

Check

- Water flows
- Pressure at inlet and outlet
- Temperature at inlet and outlet

G.13.1.12.3

Check that there is water flow in all branches.

G.13.1.13

Energization of power supply (vendor to supply dummy load to allow power supply to output full power.)

G.13.1.13.1 Status of equipment

- Main switch locked open. Temperature indicating tapes fastened to selected surfaces of thyristor heat sinks and bus in the cabinets.
- Cooling water on.
- Temporary control system service removed.
- All control functions set to minimum or off.
- Recorder(s) connected.
- All cabinet doors locked closed, or isolated by barriers if open.
- Dummy load connected.

G.13.1.13.2 Turn-on procedure

- Unlock and close main switch.
- Turn on recorders.
- Vendor to develop detailed turn-on procedure when final control drawings are issued.

G.13.1.13.3 Checkout

G.13.1.13.3.1

Manually record power level settings and meter readings every _____ min.

G.13.1.13.3.2

Using local power control, increase power supply output power in step changes of _____ % of full power, until full power output is achieved. Record settings and meter readings at each level.

G.13.1.13.3.3

Reduce level to minimum.

Copyright © 2000 IEEE. All rights reserved.

Copyright The Institute of Electrical and Electronics Engineers, Inc.
Provided by IHS under license with IEEE
No reproduction or networking permitted without license from IHS
Not for Resale

G.13.1.13.3.4

Switch local-remote switch to remote and repeat the step in G.13.1.13.3.2, using vendor supplied remote power signal.

G.13.1.13.3.5

Repeat G.13.1.13.3.1 through G.13.1.13.3.4 for each zone.

G.13.1.13.3.6

With power supply at full power, and all zones energized, run _____ h continuous test. If the test has to be interrupted for equipment failure, it shall be completely rerun. Keep a log of meter readings every _____ min.

G.13.1.14 Selectively disassemble system

Look for signs of distress and inspect heat tapes for overheating.

G.13.1.15

Review packing and shipping plans.

G.13.1.16

Agree on a "punch list" of items to be corrected before shipment.

G.13.2 Acceptance tests after installation at user's site

NOTE—Unless it is a very simple system, it is recommended that the vendor supply a technician to supervise and evaluate this testing.

G.13.2.1 Equipment covered

- Power supply
- Power connections
- Coil assembly and accessories
- Functional controls and monitoring devices

G.13.2.2 Objectives

- Inspect equipment visually
- Review factory test data
- Demonstrate functional operation of equipment
- Demonstrate full power stability for 8 h
- Prepare "punch list" for correction

G.13.2.3 Responsibilities

User has full authority over safe operation of equipment and should appoint an engineer to be responsible for the tests. Equipment performance shall be demonstrated by user personnel, with consultation with vendor's

--`,,```,,,,````-`-`,,`,,`,`,,`---

Copyright © 2000 IEEE. All rights reserved.
Copyright The Institute of Electrical and Electronics Engineers, Inc.
Provided by IHS under license with IEEE
No reproduction or networking permitted without license from IHS
Not for Resale

technician. Where hands-on checkout is desired, vendor's personnel may operate the equipment when specifically authorized by the user's test engineer.

G.13.2.4 Preparation

G.13.2.4.1

A test schedule shall be prepared by user, with consultation with vendor in advance of test. A set of layout and wiring diagrams of the equipment being tested shall be available. All changes found necessary and discrepancies shall be marked on a single designated set of these drawings and itemized in a report.

G.13.2.4.2

Vendor to check mechanical fit-up of all equipment.

G.13.2.4.3

Services necessary to operate the equipment and conduct tests shall be supplied by user. These shall include, but are not limited to: electrical supplies of required voltage, phase, and kVA to operate all equipment; any air supplies necessary to pressurize or operate equipment; cooling water; and rigging materials.

G.13.2.5 Safety

G.13.2.5.1

Disconnect switches and valves for electrical, air, and water supplies shall be accessible and clearly marked. Instructions shall be given to all participants for methods of operating switches and valves.

G.13.2.5.2

Portable fire extinguishers, Halon (or similar material which does not leave a residue) or carbon dioxide, shall be available.

G.13.2.5.3

Electrically energized portions of the system shall be insulated or isolated from inadvertent touch.

G.13.2.5.4

Exposed noncurrent carrying metal parts of the equipment shall be grounded.

G.13.2.5.5

Surfaces likely to exceed 60 °C (140 °F) during the tests shall be insulated or isolated from inadvertent touch.

G.13.2.6

The following test instrumentation shall be supplied by the user:

— System metering
— Instrumentation to measure cooling water flow and temperature rise
— Chart recorder to record inlet kilowatts, volts, and amperes

Copyright © 2000 IEEE. All rights reserved.

Copyright The Institute of Electrical and Electronics Engineers, Inc.
Provided by IHS under license with IEEE
No reproduction or networking permitted without license from IHS
Not for Resale

— Portable pyrometer with 0 –_____ °C (32 – _____ °F) range
— Temperature indicating tapes of various temperature ranges up to 100 °C (212 °F)
— 500 V megger
— Remote meters, signals, and switches
— DC hi-pot test set
— Digital multimeter

G.13.2.7 Visual inspection

G.13.2.7.1

Grounding will be inspected for continuity and compliance with national and international codes and standards.

G.13.2.7.2

Visual inspection to be made to assure equipment installation conforms with final drawings.

G.13.2.7.3

Power supply, power connections, and vessel are in proper position and connected without strain.

G.13.2.7.4

Magnetic yokes are mounted rigidly on supports provided in the vessel and evenly spaced around the perimeter.

G.13.2.7.5

Susceptor is in place in the center of the vessel and positioned correctly lengthwise.

G.13.2.7.6 Coil

G.13.2.7.6.1

Coil is mounted concentric with the magnetic yokes and susceptor.

G.13.2.7.6.2

Coil supports hold the coil rigidly in place and in proper lengthwise relationship to the susceptor.

G.13.2.8 Pre-energization tests

— Check ability of equipment to hold pressure of _____ Pa (_____ psi)
— Perform megger tests from phase-to-ground
— Input service with main switch open
— Input service with main switch closed
— Each coil zone, disconnected from capacitors
— Perform hi-pot dielectric test on coil with a maximum voltage of volts dc. Current leakage should be less than _____ μA

Copyright © 2000 IEEE. All rights reserved.
Copyright The Institute of Electrical and Electronics Engineers, Inc.
Provided by IHS under license with IEEE
No reproduction or networking permitted without license from IHS
Not for Resale

G.13.2.9 Functional checkout

An operation check sheet shall be compiled during these tests.

G.13.2.9.1 Status of equipment

— Main switch closed
— Contactor open
— Cooling water valved off

G.13.2.9.2

Functional operation (local and remote)

G.13.2.9.2.1

List of equipment to be operated will be developed when final drawings are received.

G.13.2.9.2.2

Check the status of all indicators before and after each operation.

G.13.2.10 Water system checkout

G.13.2.10.1

Turn on cooling water to cabinets.

G.13.2.10.1.1

Visually check for leaks.

G.13.2.10.1.2

Check the following:

— Water flows
— Pressure at inlet and outlet
— Temperature at inlet and outlet

G.13.2.10.2

Turn on cooling water to coils.

G.13.2.10.2.1

Check the following:

— Water flows
— Pressure at inlet and outlet
— Temperature at inlet and outlet

Copyright © 2000 IEEE. All rights reserved.

Copyright The Institute of Electrical and Electronics Engineers, Inc.
Provided by IHS under license with IEEE
No reproduction or networking permitted without license from IHS
Not for Resale

G.13.2.10.2.2

Check that there is water flow in all branches.

G.13.2.11 Energization of power supply

G.13.2.11.1

Status of equipment.

- Main switch locked open.
- Cooling water on.
- All control functions set to minimum or off.
- Recorder(s) connected.
- All cabinet doors locked closed, or isolated by barriers if open.

G.13.2.11.2

Turn-on procedure.

- Unlock and close main switch.
- Turn on recorders.
- User to develop detailed turn-on procedure when final control drawings are issued.

G.13.2.11.3 Checkout

G.13.2.11.3.1

Manually record power level settings and meter readings every _____ min.

G.13.2.11.3.2

Using local power control, increase power supply output power in step changes of percent of full power, until full power output is achieved. Record settings and meter readings at each level.

G.13.2.11.3.3

Reduce level to minimum.

G.13.2.11.3.4

Switch local-remote switch to remote and repeat step G.13.2.11.3.2, using user's remote signals and controls.

G.13.2.11.3.5

Repeat the steps in G.13.2.11.3.1 through G.13.2.11.3.4 for each zone.

Copyright © 2000 IEEE. All rights reserved.
Copyright The Institute of Electrical and Electronics Engineers, Inc.
Provided by IHS under license with IEEE
No reproduction or networking permitted without license from IHS
Not for Resale

G.13.2.11.3.6

With power supply at full power, and all zones energized, run _____ h continuous test. If the test has to be interrupted for equipment failure, it shall be completely rerun. Keep a log of meter readings every _____ min.

G.13.2.12

Develop "punch list" of things to be changed and schedule changes.

G.13.2.13

When changes are complete, turn over to operations.

G.14 Information required with quotation

The following are examples. Actual requirements will be specified in the request for quote from the user.

G.14.1

Price, including equipment costs and estimated freight cost to final destination.

G.14.2

Complete description of equipment to be supplied, including diagrammatic sketches. Indicate overall dimensions, electrical and water paths, bills of material, ratings, and descriptive literature.

G.14.2.1

Electrical system ratings are as follows:

- Input and output kilowatts (kW)
- Input kilovolt amperes (kVA)
- Maximum output voltage (V) and amperes (A)
- Output frequency range
- Number of coil zones
- Maximum kW delivered to susceptor

G.14.2.2

Water system flow and pressure drop for each major component.

G.14.3

Profile of temperature distribution in graphite susceptor while operating at _____ °C (_____ °F) and supporting calculations.

Copyright © 2000 IEEE. All rights reserved.

Copyright The Institute of Electrical and Electronics Engineers, Inc.
Provided by IHS under license with IEEE
No reproduction or networking permitted without license from IHS
Not for Resale

G.14.4

Detailed description of coil insulation system, dielectric strength, suitability for vessel atmosphere, and testing to assure integrity.

G.14.5

Exceptions taken to this specification in detail.

G.14.6

Alternative methods the vendor may propose to be more cost effective.

G.14.7 Warranty information

G.14.7.1

Time covered before and after installation and start-up.

G.14.7.2

Extent of coverage.

G.14.8 Field support services

G.14.8.1

Costs per day.

G.14.8.2

Estimate of commissioning support necessary.

G.14.8.3

Where support is provided from, and maximum time to respond.

G.14.9 Schedule

NOTE— Vendor to give approximate times.

The following list is a sample. Actual requirements will be specified in the request for quote from the vendor.

G.14.9.1

Preliminary prints for review after receipt of order.

G.14.9.2

Approval drawings.

Copyright © 2000 IEEE. All rights reserved.
Copyright The Institute of Electrical and Electronics Engineers, Inc.
Provided by IHS under license with IEEE
No reproduction or networking permitted without license from IHS
Not for Resale

G.14.9.3

Detailed factory test procedure.

G.14.9.4

Final drawings after return of approved as noted drawings.

G.14.9.5

Factory tests.

Note—User requires _____ weeks notice to respond.

G.14.9.6

Shipment after completion of factory tests.

G.15 Information required for fabrication release

The following are examples. Actual requirements will be specified in the contract between the user and the vendor.

G.15.1

Complete description of equipment to be supplied, including drawings showing overall dimensions, electrical and water paths, bills of material, ratings, and descriptive literature.

G.15.1.1

Electrical system ratings are as follows:

- Input and output kilowatts (kW)
- Input kilovolt amperes (kVA)
- Maximum output voltage (V) and amperes (A)
- Output frequency range
- Number of coil zones
- Maximum kW delivered to susceptor

G.15.1.2

Water system flow and pressure drop for each major component.

G.15.2

Profile of temperature distribution in graphite susceptor while operating at _____ °C (_____ °F) and supporting calculations.

Copyright © 2000 IEEE. All rights reserved.

Copyright The Institute of Electrical and Electronics Engineers, Inc.
Provided by IHS under license with IEEE
No reproduction or networking permitted without license from IHS
Not for Resale

G.15.3

Detailed description of coil insulation system, dielectric strength, suitability for vessel atmosphere, and recommended testing to assure integrity.

G.15.4 Schedule

G.15.4.1

Detailed factory test procedure.

G.15.4.2

Final drawings after return of "Approved as Noted" on drawings.

G.15.4.3

Factory tests.

NOTE—User requires _____ days'/weeks' notice to respond.

G.15.4.4

Shipment after completion of factory tests.

G.16 Final information required

The following are examples. Actual requirements will be specified in the contract between the user and the vendor.

G.16.1

Drawings reflecting changes made at the factory. (To be revised later to reflect changes made at user's facility.)

G.16.2

Installation instructions.

G.16.3

Operating instructions.

G.16.4

Recommended spare parts list.

Copyright © 2000 IEEE. All rights reserved.
Copyright The Institute of Electrical and Electronics Engineers, Inc.
Provided by IHS under license with IEEE
No reproduction or networking permitted without license from IHS
Not for Resale

G.16.5

Recommended maintenance procedures and intervals.

G.17 Packaging and shipment

The following are examples. Actual requirements will be specified in the contract between the user and the vendor.

G.17.1

Equipment shall be packaged for shipment by (truck/rail/air/sea). Package weights shall be provided. All packaging shall be watertight and substantial enough to be handled as a unit by slings or fork lift truck.

G.17.2

If removed from the vessel for shipping, magnetic yokes shall be separately boxed with attachment hardware and assembly instructions.

G.17.3

Coil and support system shall be separately packaged, as completely assembled as possible. Coil shall be cleaned of all foreign matter, dried, and ends sealed before packaging. It shall be braced to prevent distortion and insulation protected against cuts and abrasions. A reusable yoke for crane lifting may be provided if required as part of the packaging.

G.17.4

Port connection assembly shall be packaged in one package with all associated hardware and assembly instructions.

G.17.5

Power supply is to be shipped in one package if possible. If it must be separated, electrical connections are to be coded at separation point and bundled for connection to terminal points. Water connections are to be coded, with flexible connections supplied. All piping shall be cleaned of foreign matter, dried, and ends sealed before packaging. All cabinet openings shall be sealed. Cabinets shall be braced in the package to prevent movement. Instructions are to be included for assembly and removal of internal bracing.

G.18 Release for shipment

The following are examples. Actual requirements will be specified in the contract between the user and the vendor.

G.18.1

It is vendor's responsibility to assure that all user's inspection requirements are complied with before shipment. Equipment is not to be shipped before release by user's inspector.

G.18.2

Acceptance by user's inspector does not relieve vendor of responsibility of meeting specification.

Copyright © 2000 IEEE. All rights reserved.

Copyright The Institute of Electrical and Electronics Engineers, Inc.
Provided by IHS under license with IEEE
No reproduction or networking permitted without license from IHS
Not for Resale

Copyright © 2000 IEEE. All rights reserved.

Copyright The Institute of Electrical and Electronics Engineers, Inc.
Provided by IHS under license with IEEE
No reproduction or networking permitted without license from IHS
Not for Resale