F-02-25

ANSI/IEEE Std 813-1988

AMERICAN NATIONAL STANDARD

813-88 | 4805702 0033424 8

IEEE Specification Format Guide and Test Procedure for Two-Degree-of-Freedom Dynamically Tuned Gyros

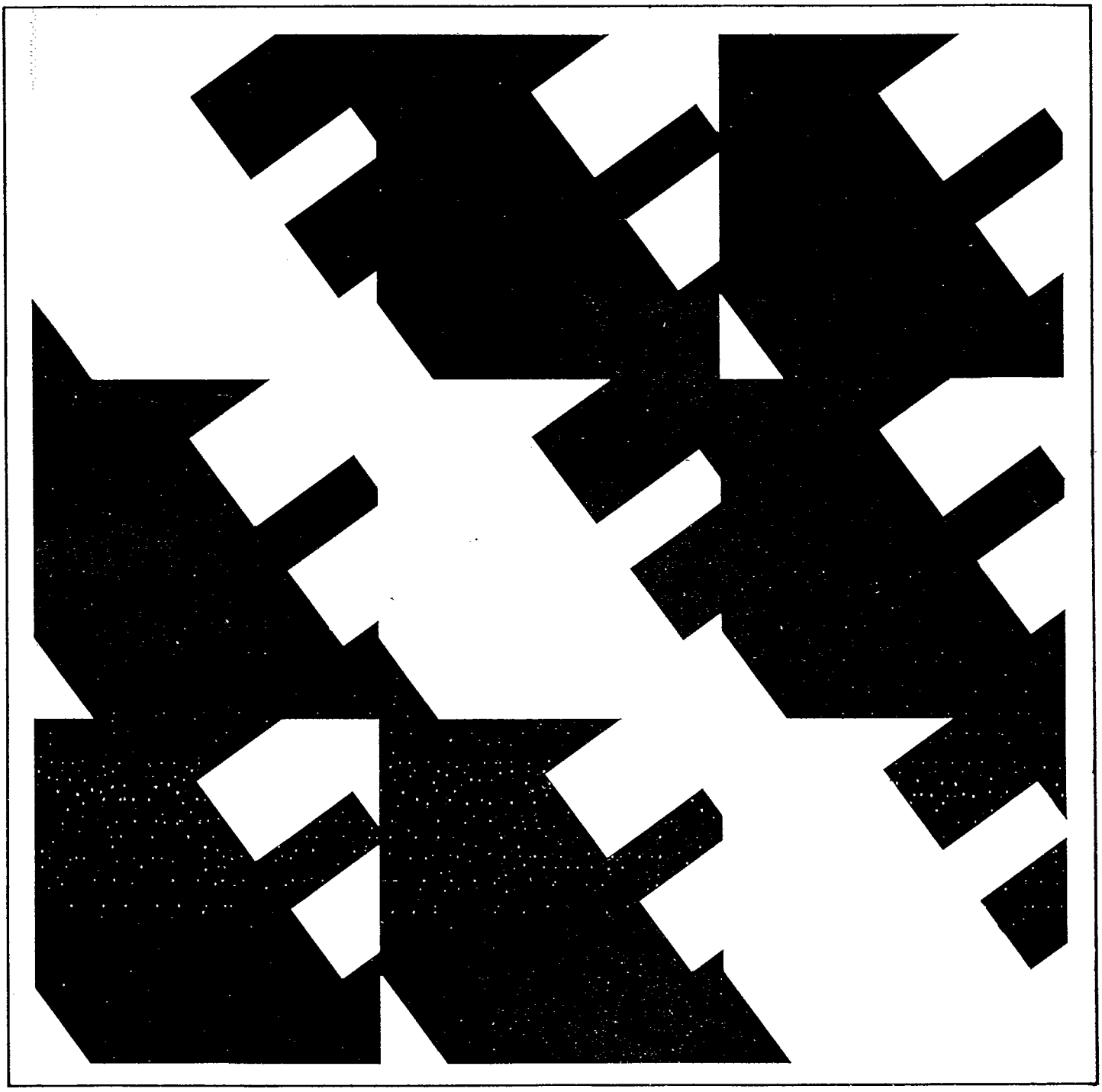

ANSI/IEEE Std 813-1988

Published by The Institute of Electrical and Electronics Engineers, Inc 345 East 47th Street, New York, NY 10017, USA

Copyright The Institute of Electrical and Electronics Engineers, Inc.
Provided by IHS under license with IEEE
No reproduction or networking permitted without license from IHS

Not for Resale

SH12666

813-88 4805702 0033425 T

ANSI/IEEE
Std 813-1988

An American National Standard

IEEE Specification Format Guide and Test Procedure for Two-Degree-of-Freedom Dynamically Tuned Gyros

Sponsor

**Prepared by the Gyro and Accelerometer Panel
of the
IEEE Aerospace and Electronic Systems Society**

Approved August 17, 1988

IEEE Standards Board

Approved May 4, 1989

American National Standards Institute

© Copyright 1989 by

**The Institute of Electrical and Electronics Engineers, Inc
345 East 47th Street, New York, NY 10017-2394, USA**

*No part of this publication may be reproduced in any form,
in an electronic retrieval system or otherwise,
without the prior written permission of the publisher.*

Copyright The Institute of Electrical and Electronics Engineers, Inc.
Provided by IHS under license with IEEE
No reproduction or networking permitted without license from IHS

Not for Resale

IEEE Standards documents are developed within the Technical Committees of the IEEE Societies and the Standards Coordinating Committees of the IEEE Standards Board. Members of the committees serve voluntarily and without compensation. They are not necessarily members of the Institute. The standards developed within IEEE represent a consensus of the broad expertise on the subject within the Institute as well as those activities outside of IEEE which have expressed an interest in participating in the development of the standard.

Use of an IEEE Standard is wholly voluntary. The existence of an IEEE Standard does not imply that there are no other ways to produce, test, measure, purchase, market, or provide other goods and services related to the scope of the IEEE Standard. Furthermore, the viewpoint expressed at the time a standard is approved and issued is subject to change brought about through developments in the state of the art and comments received from users of the standard. Every IEEE Standard is subjected to review at least once every five years for revision or reaffirmation. When a document is more than five years old, and has not been reaffirmed, it is reasonable to conclude that its contents, although still of some value, do not wholly reflect the present state of the art. Users are cautioned to check to determine that they have the latest edition of any IEEE Standard.

Comments for revision of IEEE Standards are welcome from any interested party, regardless of membership affiliation with IEEE. Suggestions for changes in documents should be in the form of a proposed change of text, together with appropriate supporting comments.

Interpretations: Occasionally questions may arise regarding the meaning of portions of standards as they relate to specific applications. When the need for interpretations is brought to the attention of IEEE, the Institute will initiate action to prepare appropriate responses. Since IEEE Standards represent a consensus of all concerned interests, it is important to ensure that any interpretation has also received the concurrence of a balance of interests. For this reason IEEE and the members of its technical committees are not able to provide an instant response to interpretation requests except in those cases where the matter has previously received formal consideration.

Comments on standards and requests for interpretations should be addressed to:

Secretary, IEEE Standards Board
345 East 47th Street
New York, NY 10017
USA

IEEE Standards documents are adopted by the Institute of Electrical and Electronics Engineers without regard to whether their adoption may involve patents on articles, materials, or processes. Such adoption does not assume any liability to any patent owner, nor does it assume any obligation whatever to parties adopting the standards documents.

Copyright The Institute of Electrical and Electronics Engineers, Inc.
Provided by IHS under license with IEEE
No reproduction or networking permitted without license from IHS
Not for Resale

Foreword

(This Foreword is not a part of ANSI/IEEE Std 813-1988, IEEE Specification Format Guide and Test Procedure for Two-Degree-of-Freedom Dynamically Tuned Gyros.)

This guide was prepared by the Gyro and Accelerometer Panel of the Aerospace Electronics Systems Society of the Institute of Electrical and Electronics Engineers. It consists of two parts.

Part I is a specification format guide for the preparation of a two-degree-of-freedom dynamically tuned gyro (DTG) specification. It provides a common meeting ground of terminology and practice for manufacturers and users. The user is cautioned not to overspecify; only those parameters that are required to guarantee proper instrument performance in the specific application should be controlled. In general, the specification should contain only those requirements that can be verified by test or inspection. Parameters in addition to those given in this standard are not precluded.

Part II is a compilation of recommended procedures for testing a DTG. These procedures, including test conditions to be considered, are derived from those currently in use. For a specific application, the test procedure should reflect the requirements of the specifications; therefore, not all tests outlined in this document need to be included, nor are additional tests precluded. In some cases, alternative methods for measuring performance characteristics have been included or indicated.

The intent is for the specification writer to extract the applicable test conditions and equipment requirements from Section 9 for inclusion in the appropriate sections listed under 4.5. Similarly, it is intended that the writer extract the applicable test procedures from Section 10 for inclusion in the appropriate sections listed under 4.6. Part II can also be used as a guide in the preparation of a separate gyro test specification with appropriate section numbering.

Blank spaces in the text of this document permit the insertion of specific parameter values and their tolerances. Brackets are used to enclose alternative choices of dimensional units, signs, axes, etc. Boxed statements are included for information only and are not part of the specification or test procedures. The terminology used conforms to ANSI/IEEE Std 100-1988, IEEE Standard Dictionary of Electrical and Electronics Terms and ANSI/IEEE Std 528-1984, IEEE Standard Inertial Sensor Terminology. The units used conform to ANSI/IEEE Std 268-1982, American National Standard Metric Practice. The abbreviation of units conforms to ANSI/IEEE Std 260-1978 (R 1985), IEEE Standard Letter Symbols for Units of Measurement (SI Units, Customary Inch-Pound Units, and Certain Other Units). The graphic symbols used conform to ANSI/IEEE Std 315-1975, IEEE Graphic Symbols for Electrical and Electronics Diagrams.

This guide defines the requirements and test procedures for a DTG in terms unique to that gyro. The requirements and tests contained herein cover applications where the gyro is used as an angular motion sensor in navigation and control systems. These requirements and tests apply to the two modes of use: (1) As a strapdown sensor in operating environments typical of aircraft and missile applications, and (2) As a sensor in gimballed platform applications in which the dynamic angular inputs to which the gyro is subjected are benign relative to the accuracy required. The strapdown DTG, because the rotor is captured through two external loops using the two gyro torquers, provides two voltages, currents, or pulse trains proportional to the angular rates about the respective two orthogonal input axes. The gimballed platform DTG provides two output signals proportional to angular displacement of the case about the respective two orthogonal input axes when captured by a servoed platform.

The term two-degree-of-freedom dynamically tuned gyro does not generally include the external electronics. However, in the case of the strapdown DTG, the characteristics of the external capture loops are considered to the extent necessary to define the gyro performance. A model equation is given in 6.3 for reference, to be included in a specification only to the extent necessary.

Appendix A lists various DTG design features for which this format is applicable. The table therein is not intended to make any suggestion regarding the selection of particular design features that might restrict the free choice of manufacturers.

Copyright The Institute of Electrical and Electronics Engineers, Inc.
Provided by IHS under license with IEEE
No reproduction or networking permitted without license from IHS
Not for Resale

Appendix B shows the DTG open-loop frequency response characteristics, which may be referred to when specifying and evaluating gyro dynamic response. Appendix C presents a guide to the operation of a DTG.

The IEEE will maintain this guide current with the state of the technology.

This publication represents a group effort on a large scale. A total of 141 individuals attended 50 meetings on the Gyro and Accelerometer Panel while this standard was in preparation. The major contributors to this standard were the following:

T.C. Lear, *Chairman*

C.H. Barker	M. Hooser	R.B. Peters
S.F. Becka	K.J. Klarman	S. Piccione
J.S. Beri	M.G. Koning	A. Scoville
C.E. Bosson	E.L. Ladenheim	C. Seacord
A.T. Campbell*	A.M. Leeking	N.F. Sinnott
A. Champsi	J.B. Lewis	R. Smith
J.F. Conroy	D.D. Lynch	C.B. Strang
J.W. Davies*	D.L. Macy	C.O. Swanson
H. Diamond	R.D. Marquess	R. Thede
G. Erickson	H.D. Morris	L.A. Trozpek
A.H. Ferraris	G.E.S. Morrison*	R.L. Van Alstine
K.N. Green	G.C. Murray*	B.J. Wimber
R. Hartzell	J.G. Neugroschl	B.R. Youmans

*Past Chairman

The following persons were on the balloting committee that approved this document for submission to the IEEE Standard Board:

C.H. Barker	R.M. Hensley	G.E.S. Morrison
S.F. Becka	G. Hoffman	G.C. Murray
J.S. Beri	M. Hooser	G. Neugebauer
C.E. Bosson	M.G. Koning	J.G. Neugroschl
A.T. Campbell	P. Krebs	R.B. Peters
A. Champsi	K. Lantz	W. Phillips
M. Coles	T.C. Lear	P. Simpson
J.F. Conroy	A.M. Leeking	N.F. Sinnott
J.W. Davies	J.B. Lewis	C.O. Swanson
H. Diamond	D.D. Lynch	R. Thede
N.C. Duffield	D.L. Macy	C.I. Thornberg
G. Erickson	R.D. Marquess	L.A. Trozpek
T. Fuhrman	M. McClure	B.J. Wimber
K.N. Green	F. Morgan	B. Youmans
	H.D. Morris	

When the IEEE Standards Board approved this standard on August 17, 1988, it had the following membership:

Donald C. Fleckenstein, *Chairman* **Marco Migliaro,** *Vice Chairman*

Andrew G. Salem, *Secretary*

Arthur A. Blaisdell	John W. Horch	L. Bruce McClung
Fletcher J. Buckley	Jack M. Kinn	Donald T. Michael*
James M. Daly Frank	D. Kirschner	Richard E. Mosher
Stephen R. Dillon	Frank C. Kitzantides	L. John Rankine
Eugene P. Fogarty	Joseph L. Koepfinger*	Gary S. Robinson
Jay Forster*	Irving Kolodny	Frank L. Rose
Thomas L. Hannan	Edward Lohse	Helen M. Wood
Kenneth D. Hendrix	ohn E. May, Jr	Karl H. Zaininger
Theodore W. Hissey, Jr	Lawrence V. McCall	Donald W. Zipse

*Member Emeritus

Copyright The Institute of Electrical and Electronics Engineers, Inc.
Provided by IHS under license with IEEE
No reproduction or networking permitted without license from IHS
Not for Resale

Contents
Part I — Specification Format

SECTION PAGE

1. Scope and References 11
   1.1 Scope 11
   1.2 References 11

2. Applicable Documents 11
   2.1 Specifications 11
      2.1.1 Government 11
      2.1.2 Industry/Technical 11
      2.1.3 Company 11
   2.2 Standards 11
      2.2.1 Government 11
      2.2.2 Industry/Technical 12
      2.2.3 Company 12
   2.3 Drawings 12
      2.3.1 Government 12
      2.3.2 Industry/Technical 12
      2.3.3 Company 12
   2.4 Bulletins 12
      2.4.1 Government 12
      2.4.2 Industry/Technical 12
      2.4.3 Company 12
   2.5 Other Publications 12

3. Requirements 12
   3.1 Description 12
   3.2 General Requirements 12
      3.2.1 Precedence 12
      3.2.2 Definitions 12
   3.3 Performance 12
      3.3.1 Run-Up Time 12
      3.3.2 Run-Down Time 12
      3.3.3 Operating Temperature 12
      3.3.4 Turn-On and Warm-Up Times 12
      3.3.5 Polarities 12
      3.3.6 Limit Stop 13
      3.3.7 Tuned Speed 13
      3.3.8 Dynamic Time Constant 13
      3.3.9 Rotor Rotation Detectors 13
      3.3.10 Pickoff 13
      3.3.11 Torquer Performance 13
      3.3.12 In-Phase-Spring-Rate Drift Rate Coefficient 14
      3.3.13 Quadrature-Spring-Rate Drift Rate Coefficient 14
      3.3.14 Acceleration-Insensitive Drift Rate 14
      3.3.15 Acceleration-Sensitive Drift Rate Coefficient 14
      3.3.16 Acceleration-Squared-Sensitive Drift Rate Coefficient 14
      3.3.17 Anisoinertia Drift Rate Coefficients 14
      3.3.18 Rotor Speed Sensitivity 14
      3.3.19 Cross-Coupling Drift Rate 14
      3.3.20 Synchronous Vibration Sensitivity 15

Copyright The Institute of Electrical and Electronics Engineers, Inc.
Provided by IHS under license with IEEE
No reproduction or networking permitted without license from IHS
Not for Resale

SECTION PAGE

3.3.21 Torquer-Current Rectification Drift Rate 15
3.3.22 Random Drift Rate 15
3.3.23 Drift Rate Stability 15
3.3.24 Output Noise 15
3.3.25 Hysteresis Error 15
3.3.26 Dynamic Response 15
3.3.27 Axis Alignment 16
3.3.28 Reference Constants 16
3.4 Mechanical Requirements 16
3.4.1 Exterior Surfaces 16
3.4.2 Outline and Mounting Dimensions 16
3.4.3 Gyro Axes 16
3.4.4 Weight 16
3.4.5 Seal 16
3.4.6 Internal Mechanical Configuration 19
3.4.7 Identification of Product 19
3.5 Electrical Requirements 19
3.5.1 Schematic 19
3.5.2 Circuit Excitations and Impedances 19
3.5.3 Test Points 21
3.5.4 Grounding 21
3.5.5 Closed-Loop Output Signals 22
3.5.6 Dielectric Strength 22
3.5.7 Insulation Resistance 22
3.5.8 Electromagnetic Interference 22
3.5.9 Magnetic Leakage 22
3.6 Environmental Requirements 22
3.6.1 Storage 22
3.6.2 Transport 22
3.6.3 Operation 22
3.6.4 Environments 23
3.7 Reliability 25
3.7.1 Reliability Program 25
3.7.2 Mean Time Between Failure (MTBF) 25

4. Quality Assurance Provisions 25
4.1 Classification of Tests 25
4.2 Acceptance Tests 25
4.2.1 Individual Tests 25
4.2.2 Sampling Plans and Tests 25
4.3 Qualification Tests 26
4.3.1 Qualification Test Samplings 26
4.3.2 Qualification Tests 26
4.4 Reliability Tests 26
4.4.1 Run-In 26
4.4.2 Demonstration Testing 26
4.5 Test Conditions and Equipment 26
4.6 Test Methods 26
4.6.1 Examination of Product (Mechanical) 27
4.6.2 Examination of Product (Electrical) 27
4.6.3 Leak Test 27
4.6.4 Polarity 27

Copyright The Institute of Electrical and Electronics Engineers, Inc.
Provided by IHS under license with IEEE
No reproduction or networking permitted without license from IHS
Not for Resale

SECTION PAGE

4.6.5 Operating Temperature Test Series 27
4.6.6 Pickoff Test Series 27
4.6.7 Torquer Test Series 27
4.6.8 Rotor Rotation Detector 27
4.6.9 Spin Motor Test Series 27
4.6.10 Axis Alignment 27
4.6.11 Limit Stop 27
4.6.12 Dynamic Time Constant 27
4.6.13 Tuned Speed 27
4.6.14 Drift Rate Test Series 27
4.6.15 Output Noise 27
4.6.16 Dynamic Response Test Series 27
4.6.17 Generated Fields 27
4.6.18 Environmental Test Series 27
4.6.19 Turn-On and Warm-Up Times 27
4.7 Data Submittal 27

5. Preparation for Delivery 27

6. Notes 27
6.1 Intended Use 27
6.2 Ordering Data 28
6.3 Model Equations 28

Part II - Test Procedure

7. Scope 31

8. Description 31
8.1 Angular Displacement Sensing 31
8.2 Angular Rate Sensing 31
8.3 Model Equation 31

9. Test Conditions and Test Equipment 31
9.1 Standard Test Conditions 31
9.1.1 Ambient Environment 31
9.1.2 Installation Conditions 31
9.1.3 Electrical Excitation and Load Conditions 32
9.1.4 Starting Procedure 32
9.1.5 Turn-Off Procedure 32
9.2 Standard Operating and Test Equipment 32
9.2.1 General Requirements 32
9.2.2 Standard Operating Equipment 33
9.2.3 Test Equipment 33

10. Test Procedures 33
10.1 Examination of Product (Mechanical) 33
10.2 Examination of Product (Electrical) 33
10.2.1 Impedance Test 33
10.2.2 Dielectric Strength Test 33
10.2.3 Insulation Resistance Test 34
10.3 Leak Test 34

Copyright The Institute of Electrical and Electronics Engineers, Inc.
Provided by IHS under license with IEEE
No reproduction or networking permitted without license from IHS
Not for Resale

SECTION PAGE

10.3.1 Purpose 34
10.3.2 Test Equipment 34
10.3.3 Test Setup and Procedure 34
10.3.4 Test Results 34
10.4 Polarity 34
10.4.1 Purpose 34
10.4.2 Test Equipment 34
10.4.3 Test Setup and Procedure 34
10.4.4 Test Results 35
10.5 Operating Temperature Test Series 35
10.5.1 Temperature Sensor Characteristics 35
10.5.2 Operating Temperature 35
10.6 Pickoff Test Series 35
10.6.1 Purpose 35
10.6.2 Test Equipment 35
10.6.3 Test Setup and Procedure 35
10.6.4 Test Results 36
10.7 Torquer Test Series 37
10.7.1 Purpose 37
10.7.2 Test Equipment 37
10.7.3 Test Setup and Procedure 37
10.7.4 Test Results 38
10.8 Rotor Rotation Detector 39
10.8.1 Purpose 39
10.8.2 Test Equipment 39
10.8.3 Test Setup and Procedure 39
10.8.4 Test Results 39
10.9 Spin Motor Test Series 39
10.9.1 Purpose 39
10.9.2 Test Equipment 39
10.9.3 Test Setup and Procedure 39
10.9.4 Test Results 39
10.10 Axis Alignment 39
10.10.1 Torquer Axis Alignment 39
10.10.2 Rotor Spin Axis Alignment 40
10.11 Limit Stop 41
10.11.1 Purpose 41
10.11.2 Test Equipment 41
10.11.3 Test Setup and Procedure 41
10.11.4 Test Results 41
10.12 Tuned Speed 41
10.12.1 Purpose 41
10.12.2 Test Equipment 41
10.12.3 Test Setup and Procedure 41
10.12.4 Test Results 42
10.13 Dynamic Time Constant 42
10.13.1 Purpose 42
10.13.2 Test Equipment 42
10.13.3 Test Setup and Procedure 42
10.13.4 Test Results 42
10.14 Drift Rate Test Series 42
10.14.1 Purpose 42
10.14.2 Test Equipment 42

Copyright The Institute of Electrical and Electronics Engineers, Inc.
Provided by IHS under license with IEEE
No reproduction or networking permitted without license from IHS
Not for Resale

SECTION PAGE

10.14.3 Test Setup and Procedure 43
10.14.4 Test Results 47
10.15 Spring Rate Drift Rate Coefficients 50
10.15.1 Purpose 50
10.15.2 Test Equipment 50
10.15.3 Test Setup and Procedure 50
10.15.4 Test Results 50
10.16 Dynamic Response Test Series 50
10.16.1 Purpose 50
10.16.2 Test Equipment 50
10.16.3 Test Setup and Procedure 50
10.16.4 Test Results 51
10.17 Output Noise 52
10.17.1 Purpose 52
10.17.2 Test Equipment 52
10.17.3 Test Setup and Procedure 52
10.17.4 Test Results 53
10.18 Generated Fields 54
10.18.1 Electromagnetic Interference 54
10.18.2 Magnetic Leakage 54
10.19 Turn-On and Warm-Up Times 54
10.19.1 Turn-On Time 54
10.19.2 Warm-Up Time 55
10.20 Environmental Test Series 55

FIGURES

Fig 1 Closed-Loop Frequency Response 17
Fig 2 DTG Mechanical Schematic and Misalignment Angles 18
Fig 3 Typical DTG Outline Drawing 19
Fig 4 Typical DTG Electrical Schematic 20
Fig 5 Pulse Wave Shape Requirements 23
Fig 6 DTG Electronic Instrumentation 44
Fig 7 Vibration Drift Test Orientations 44
FIg 8 Typical Loop Disturbance Test Diagram 52

TABLES

Table 1 Torquer Current Designations for Multiposition Drift Rate Test 48
Table 2 Computation of Drift Rate Coefficients from Multiposition Drift Rate Test 48
Table 3 Environmental Test Series 56

APPENDIXES

Appendix A Dynamically Tuned Gyro Design Features 57
Appendix B Typical DTG Open-Loop Frequency Response 58
Appendix C A Guide to the Operation of a Dynamically Tuned Gyro (DTG) 59

APPENDIX FIGURES

Fig B1 Typical DTG Open-Loop Frequency Response 58
Fig C1 Simplified DTG Model (Free Gyro) Block Diagram 61
Fig C2 Block Diagram Showing Effect of Adding Spring Rates, Damping and Effective Gimbal Angular Momentum to DTG 62
Fig C3 Caged DTG Model Block Diagram 63
Fig C4 Caged DTG Model Block Diagram Showing Cross-Axis Servo Compensation 63
Fig C5 Two-Axis Platform Mode of Operation Block Diagram 64

Copyright The Institute of Electrical and Electronics Engineers, Inc.
Provided by IHS under license with IEEE
No reproduction or networking permitted without license from IHS
Not for Resale

An American National Standard

IEEE Specification Format Guide and Test Procedure for Two-Degree-of-Freedom Dynamically Tuned Gyros

Part I — Specification Format

1. Scope and References

1.1 Scope. This specification defines the requirements for a two-degree-of-freedom dynamically tuned gyro (DTG) to be used as a sensor in a [strapdown, gimballed] [inertial navigation system, attitude reference unit, _____] for use in [an aircraft, a missile, a spacecraft, _____] application. The characteristics of the external capture electronics are considered where necessary to define gyro performance.

1.2 References

[1] ANSI/IEEE Std 100-1988, IEEE Standard Dictionary of Electrical and Electronic Terms.[1]

[2] ANSI/IEEE Std 528-1984, IEEE Standard Inertial Sensor Terminology.

[3] MIL-STD-105D-1964, Sampling Procedure and Tables for Inspection by Attributes.[2]

[4] MIL-STD-116J-1988, Methods of Preservation.

[5] MIL-STD-461C-1987, Electromagnetic Emission and Susceptibility Requirements for the Control of Electromagnetic Interference.

[6] MIL-STD-462-1987, Measurement of Electromagnetic Interference Characteristics.

[7] MIL-STD-704D-1988, Aircraft Electric Power Characteristics.

[8] MIL-STD-781D-1986, Reliability Testing for Engineering Development, Qualification, and Production.

[9] MIL-STD-785B-1986, Reliability Program for Systems and Equipment Development and Production.

[10] MIL-STD-810D-1983, Environmental Tests Methods and Engineering Guidelines.

2. Applicable Documents

The following documents form a part of the specification to the extent specified herein. In the event of any conflict between the requirements of this document and the listed documents, the requirements of this document shall govern.

Give identification number, title, date of issue, and revision letter of each listed document.

2.1 Specifications

2.1.1 Government

MIL-STD-116J-1988 [4].[3]

2.1.2 Industry/Technical

2.1.3 Company

2.2 Standards

2.2.1 Government

(1) MIL-STD-105D-1964 [3]. (2) MIL-STD-461C-1987 [5]. (3) MIL-STD-462-1987 [6]. (4) MIL-STD-704D-1988 [7]. (5) MIL-STD-781D-1986 [8]. (6) MIL-STD-785B-1986 [9].

[1] ANSI/IEEE publications can be obtained from the Sales Department, American National Standards Institute, 1430 Broadway, New York, NY 10018, or from the Service Center, The Institute of Electrical and Electronics Engineers, 445 Hoes Lane, P.O. Box 1331, Piscataway, NJ 08854-1331.

[2] MIL publications are available from the Director, US Navy Publications and Printing Service, Eastern Division, 700 Robbins Avenue, Philadelphia, PA 19111.

[3] The numbers in brackets correspond to those of the references in 1.2 of this standard.

Copyright The Institute of Electrical and Electronics Engineers, Inc.
Provided by IHS under license with IEEE
No reproduction or networking permitted without license from IHS
Not for Resale

2.2.2 Industry/Technical
(1) ANSI/IEEE Std 100-1988 [1].
(2) ANSI/IEEE Std 528-1984 [2].
2.2.3 Company

2.3 Drawings
2.3.1 Government
2.3.2 Industry/Technical
2.3.3 Company

2.4 Bulletins
2.4.1 Government
2.4.2 Industry/Technical
2.4.3 Company

2.5 Other Publications

Other applicable documents should be listed under the appropriate paragraph.

3. Requirements

3.1 Description. The major components of the herein specified DTG are: an enclosure and mounting means, a rotor driven by a _____ spin motor, _____ pickoffs, _____ torquers, and a _____ rotor suspension.

To fill in the blanks, refer to Appendix A.

3.2 General Requirements

3.2.1 Precedence. In the event of conflict among the purchase agreement, this specification, and other documents referred to herein, the order of precedence shall be as follows:
(1) Purchase agreement.
(2) This specification and its applicable drawings (see 3.4.2 and 3.5.1).
(3) Other applicable documents (see Section 2).

3.2.2 Definitions. The following standards and the model equation of 6.3 define terminology used in this specification: ANSI/IEEE Std 100-1988 [1], and ANSI/IEEE Std 528-1984 [2].

3.2.2.1 New Definitions

gyro operating null (DTG). The condition where minimum change in drift rate occurs due to changes in wheel speed.

pickoff offset (DTG). The difference in angular rotor position between operation at pickoff electrical null and at gyro operating null.

3.3 Performance. The wheel speed and pickoff adjustment significantly influence the performance characteristics of a DTG and consequently must be properly adjusted for operation at the gyro operating null. The performance requirements are specified under these conditions. The performance tolerances include a summation of manufacturing and test errors, and environmental effects. Any exception due to environmental effects will be listed in 3.6.3.1.

When required by the application, the sensitivity of a gyro characteristic to variations in voltage, frequency, temperature, or other variables shall be included in the paragraph specifying that characteristic.

3.3.1 Run-Up Time. ___ ± ___ seconds to _____ percent of tuned speed.

3.3.2 Run-Down Time. ___ ± ___ seconds from _____ percent of tuned speed to _____ percent of tuned speed.

3.3.3 Operating Temperature. _____ ± _____ [K, °C].

3.3.4 Turn-On and Warm-Up Times

3.3.4.1 Turn-On Time. ___ [s, min] maximum.

The turn-on time conditions and performance limitations shall be specified.

3.3.4.2 Warm-Up Time. ___ [s, min] maximum.

3.3.5 Polarities

3.3.5.1 Input Axes. Positive input axes shall conform to [Drawing ___, Fig ___].

3.3.5.2 Pickoffs. A positive rotation of the gyro case about the X axis shall produce a signal from the X pickoff which is [in-phase, out-of-phase] with respect to the pickoff reference. A positive rotation of the gyro case about the Y axis shall produce a signal from the Y pickoff which is [in-phase, out-of-phase] with respect to the pickoff reference.

3.3.5.3 Torquers. With the spin motor on, a positive torquing signal applied to designated terminals of the X torquer shall produce an output from the Y pickoff which is [in-phase, out-of-phase] with respect to the pickoff reference. With the spin motor on, a positive torquing signal applied to designated terminals of the Y torquer shall produce an output from the X pickoff which is [in-phase, out-of-phase] with respect to the pickoff reference.

Torquer polarities may also be specified with the spin motor off, in which case the above polarity and axis relationships do not apply.

Copyright The Institute of Electrical and Electronics Engineers, Inc.
Provided by IHS under license with IEEE
No reproduction or networking permitted without license from IHS
Not for Resale

3.3.5.4 Motor. The rotor shall rotate in the direction indicated by [Drawing _____, Fig _____].

> Polarities of rotation detectors, temperature sensors, etc, may also be specified.

3.3.6 Limit Stop. The rotor motion shall be mechanically limited. The limit shall be _____ ± _____ [mrad, °].

3.3.7 Tuned Speed. _____ ± _____ [Hz, ____].

> The in-phase-spring-rate drift rate coefficient (see 3.3.12) is commonly specified in those applications where the gyro is operated at a predetermined rotor speed other than the nominal tuned speed.

3.3.8 Dynamic Time Constant. Shall be greater than _____ seconds.

3.3.9 Rotor Rotation Detectors

> For pulse output type, specify peak output, repetition rate, pulse width, and rise time or fall time, or both. For near sinusoidal type, specify total output, fundamental signal, and fundamental frequency. Other types of rotor rotation detectors should be specified in accordance with their characteristics.

3.3.9.1 Peak Output. _____ ± _____ V (at rated speed).

3.3.9.2 Repetition Rate. _____ times rotor speed.

3.3.9.3 Pulse Width. _____ ms at _____ V (at rated speed).

3.3.9.4 [Rise, Fall] Time. _____ ± _____ μs from _____ percent to _____ percent peak amplitude.

3.3.9.5 Total Output. _____ ± _____ V rms (at rated speed).

3.3.9.6 Fundamental Signal. (Sinusoidal) _____ percent of total output.

3.3.9.7 Fundamental Frequency. _____ times rotor speed.

3.3.10 Pickoff

3.3.10.1 Scale Factor. _____ ± _____ V/[rad, °] output angle.

3.3.10.2 Composite Error. The maximum deviation in output from that defined by the scale factor shall not exceed _____ percent of output range.

> Specific terms comprising composite error may be specified in addition to, or instead of, composite error.

3.3.10.3 Offset. 0 ± _____ [″, mrad] maximum.

3.3.10.4 Quadrature. _____ mV [rms, peak-to-peak] maximum.

3.3.10.5 Null. _____ mV [rms, peak-to-peak] maximum.

> For ac pickoffs the electrical null is composed primarily of harmonics, noise, and quadrature (voltage at a fundamental frequency but 90° out of phase with the signal output for large signals). A common practice is to achieve a minimum in-phase voltage after which the quadrature and total voltage are determined.

3.3.10.6 Phase Shift. _____ ± _____ degrees.

3.3.10.7 One-N (1N) Modulation. The One-N (1N) modulation shall not exceed _____ mV [rms, peak-to-peak].

> For some applications, the higher spin modulation harmonics may be specified. This is particularly important for high bandwidth loops.

3.3.11 Torquer Performance

3.3.11.1 Command Rate Scale Factor. _____ ± _____ [(rad/s)/mA, (rad/h)/mA, (°/s)/mA, (°/h)/mA].

> If the gyro is to be used or tested with electronics, the output of which is a pulse train, it would be necessary to define in the test procedures a scale factor for the combined gyro and electronics with units such as arc seconds per pulse (″/p).

3.3.11.2 Command Rate Scale Factor Errors

3.3.11.2.1 Linearity. _____ [(rad/s)/mA, (rad/h)/mA, (°/s)/mA, (°/h)/mA] maximum.

> This error can also be expressed in parts per million (ppm) of K_{TO}. K_{TO} is frequently obtained from a least-squares linear fit to the data. A higher order fit of scale factor variation with rate may be specified as an alternative to a linear model.

3.3.11.2.2 Asymmetry. The difference between the command rate scale factor measured with positive and negative input rates shall not exceed _____ [(rad/s)/mA, (rad/h)/mA, (°/s)/mA, (°/h)/mA].

> This error can also be expressed in parts per million (ppm) of K_{TO}.

Copyright The Institute of Electrical and Electronics Engineers, Inc.
Provided by IHS under license with IEEE
No reproduction or networking permitted without license from IHS

Not for Resale

3.3.11.2.3 Repeatability. _____ [(rad/s)/mA, (rad/h)/mA, (°/s)/mA, (°/h)/mA] [maximum spread, 1 σ, _____].

This error can also be expressed in parts per million of K_{TO}. Motor shut-downs, cool-downs, time between runs, and other factors pertinent to the particular application shall be specified.

3.3.11.2.4 Stability. _____ [(rad/s)/mA, (rad/h)/mA, (°/s)/mA, (°/h)/mA] [maximum spread, 1 σ, _____] for _____ [hour, day, ____].

This error can also be expressed in parts per million of K_{TO}.

3.3.11.3 Command Rate Scale Factor Sensitivities

3.3.11.3.1 Temperature. The change in command rate scale factor resulting from a change in steady-state operating temperature shall be _____ ± _____ [((rad/s)/mA)/°C, ((rad/h)/mA)/°C, ((°/s)/mA)/°C, ((°/h)/mA)/°C].

This sensitivity can also be expressed in ppm/°C.

3.3.11.4 Maximum Command Rate. Minimum _____ [rad/s, rad/h, °/s, °/h] for a minimum of _____ seconds.

3.3.11.5 Continuous Command Rate. Minimum: _____ [rad/s, rad/h, °/s, °/h].

The degree to which performance may be degraded during application of maximum command rate, and the recovery time, may both be specified if applicable.

3.3.11.6 Torquer Time Constant. _____ ± _____ seconds.

3.3.12 In-Phase-Spring-Rate Drift Rate Coefficient. _____ (°/h)/″ maximum.

This error is usually specified instead of tuned speed (see 3.3.7) when the gyro is operated at a predetermined rotor speed other than the tuned speed.

3.3.13 Quadrature-Spring-Rate Drift Rate Coefficient. _____ (°/h)/″ maximum.

3.3.14 Acceleration-Insensitive Drift Rate

3.3.14.1 Magnitude. $D(y)_F$, $D(x)_F$, 0 ± _____ °/h.

3.3.14.2 Repeatability. _____ °/h [Maximum spread, 1 σ, _____], each axis.

Motor shut-downs, cool-downs, time between runs, and other factors pertinent to the particular application shall be specified.

3.3.14.3 Temperature Sensitivity. _____ (°/h)/°C maximum.

3.3.14.4 Stability. _____ °/h [maximum spread, 1 σ, _____], each axis.

3.3.15 Acceleration-Sensitive Drift Rate Coefficient

3.3.15.1 Magnitude

(1) $D(y)_Y$, $D(x)_X$, 0 ± _____ (°/h)/g
(2) $D(y)_X$, $D(x)_Y$, 0 ± _____ (°/h)/g
(3) $D(y)_Z$, $D(x)_Z$, 0 ± _____ (°/h)/g

3.3.15.2 Repeatability. _____ (°/h)/g [Maximum spread, 1 σ, _____].

Motor shut-downs, cooldowns, time between runs, and other factors pertinent to the particular application shall be specified.

3.3.15.3 Temperature Sensitivity. _____ (°/h)/g)/°C maximum for any coefficient.

3.3.15.4 Stability. _____ (°/h)/g [maximum spread, 1 σ, _____], each axis.

3.3.16 Acceleration-Squared-Sensitive Drift Rate Coefficient. 0 ± _____ (°/h)/$(g)^2$.

The specification should state whether this requirement applies to each of the coefficients $D(y)_{XZ}$, $D(y)_{YZ}$, $D(x)_{XZ}$, and $D(x)_{YZ}$ individually, or represents a maximum value for acceleration along any axis. The coefficient(s) should be specified as a function of frequency if applicable.

3.3.17 Anisoinertia Drift Rate Coefficients. _____ ± _____ [(rad/h)/ $(rad/s)^2$, (°/h)/$(°/s)^2$].

3.3.18 Rotor Speed Sensitivity. The change in in-phase-spring-rate drift rate coefficient due to a change in gyro rotor speed of ± _____ Hz shall be _____ (°/h)/″)/Hz maximum.

See 3.3.7, tuned speed, and 3.3.12, in-phase-spring-rate drift rate coefficient.

3.3.19 Cross-Coupling Drift Rate

This drift rate results from nonoscillatory or oscillatory rotations about the Z axis (see Fig 3).

3.3.19.1 Nonoscillatory

This component of cross coupling drift rate is not normally separable from the rotor spin axis misalignment. See 3.3.25.

3.3.19.2 Oscillatory. 0 ± _____ [rad/h, °/h].

Copyright The Institute of Electrical and Electronics Engineers, Inc.
Provided by IHS under license with IEEE
No reproduction or networking permitted without license from IHS
Not for Resale

Gyro axis misalignments, the hangoff angle due to null offset and the transfer function of the capture electronics must be considered when specifying this drift rate. This drift rate exists when a quadrature component of torquing current with respect to the input oscillation occurs.

3.3.20 Synchronous Vibration Sensitivity

(1) *One-N (1N) Translational Sensitivity.* _____ [(°/h)/g, _____] maximum, for linear vibration along the Z axis.

(2) *Two-N (2N) Translational Sensitivity.* _____ [(°/h)/g, _____] maximum, for linear vibration normal to the Z axis.

(3) *Two-N (2N) Angular Sensitivity.* _____ [(°/h)/(rad/s^2), _____] maximum, for angular vibration about an axis normal to the Z axis.

These sensitivities result from the rectification of the driving input with mass unbalances in the sensitive element, imperfections in the flexure elements, and inertia characteristics of the gimbal(s). Their magnitudes depend upon design features unique to each particular gyro configuration. In all cases the rectifications occur only for synchronous vibrations at either the spin frequency (1N) or twice the spin frequency (2N) along or about the indicated axis. The source of the synchronous vibrations can be either externally induced motions or internally induced motions, for example, shaft wobble induced by bearing anomalies. In certain applications involving gyros mounted in close proximity the rectification resulting from the external influence of one gyro on a companion gyro can be eliminated by operating each gyro at a slightly different spin frequency.

3.3.21 Torquer-Current Rectification Drift Rate. 0 ± _____ [rad/h, °/h].

The selected conditions under which the drift rate is to be specified should be defined.

3.3.22 Random Drift Rate. _____ °/h, 1 σ for each axis, with the gyro oriented [Z axis horizontal, Z axis vertical, _____].

Requirements for more than one orientation may be specified. Test duration and either sample time or frequency bandwidth should be specified, dependent upon data reduction techniques.

Random drift rate may be specified in terms such as rate white noise in °/h or (°/h)/Hz, correlated random drift rate in °/h rms, rate random walk in (°/h)/h or rate ramp in °/h^2.

3.3.23 Drift Rate Stability. _____ °/h [maximum spread, 1 σ, _____], each axis for a period of _____ [minutes, hours, days, _____].

The fixed gyro-orientation and the steady-state environmental conditions such as temperature, vibration, etc, should be specified. Short-term and long-term drift rate stabilities may be specified.

3.3.24 Output Noise

3.3.24.1 Equivalent Input Angle Noise. The equivalent input angle noise in the electrical output signal for zero input shall not exceed _____ (μrad, arc seconds) rms as determined by the square root of the integral of the power spectrum between _____ Hz and _____ Hz.

3.3.24.2 Equivalent Rate Noise. The equivalent rate noise shall not exceed _____ [μrad/s, ″/s, °/h] rms as determined by the square root of the integral of the power spectrum between _____ Hz and _____ Hz.

If necessary, the power spectral density of input angle noise or rate noise may be specified over a specific frequency range in place of rms error. In any case, it must be recognized that the electronics associated with the gyro contribute to the total noise error.

For certain applications, inputs other than zero may be specified.

3.3.24.3 Noise Equivalent Angle (NEA). The noise equivalent angle of the incremental angle outputs shall not exceed _____ arc seconds. It is the peak-to-peak difference between the following two functions over a _____ [min, h] duration, for input rates of [0, ___]″/s, at a temperature of _____ ± _____ °C, and in a benign environment (minimal vibration, thermal, magnetic inputs).

(1) *Function 1.* The angular measurement over a _____ [min, h] duration with a sample interval of _____ ± _____ ms.

(2) *Function 2.* The best linear fit (angle vs time) of function 1, in a least-squares manner.

3.3.25 Hysteresis Error. _____ °/h maximum over an input range of _____ [rad/s, rad/h, °/s].

3.3.26 Dynamic Response

3.3.26.1 Open-Loop Response. The open loop response shall be within the limits defined by Fig ___.

Copyright The Institute of Electrical and Electronics Engineers, Inc.
Provided by IHS under license with IEEE
No reproduction or networking permitted without license from IHS

Not for Resale

Pickoff amplitude versus input amplitude as a function of frequency is generally not specified. For information, an example of the open loop response is shown in Appendix B.

3.3.26.2 Closed-Loop Response. Torquer current amplitude and phase versus input rate as a function of frequency shall be within the limits defined by Fig _____.

Closed-loop requirements are normally specified only for strapdown applications. Figure 1 is an example of a closed-loop response characteristic.

The dynamic response is largely determined by the capture electronics. Characteristics of the capture electronics must be specified.

3.3.27 Axis Alignment. Torquer axis X_T shall be aligned to case axis X within _____ [mrad, _____]. Torquer axis Y_T shall be aligned to case axis Y within _____ [mrad, _____]. Torquer axis X_T shall be perpendicular to torquer axis Y_T within _____ [mrad, _____]. The rotor spin axis shall be aligned to case axis Z within _____ [mrad, _____].

Misalignment angles are shown in Fig 2. Note that case axes must conform to 3.4.2 and 3.4.3. Axis stability and repeatability may also be specified.

3.3.28 Reference Constants. These constants are for reference only. They are not specified independently, because they may vary within the framework of the specification, or because they are difficult or impossible to measure independently in a completed gyro. Nominal values are listed.

3.3.28.1 Rotor Angular Momentum. _____ [g · cm²/s, dyn · cm · s].

3.3.28.2 Rotor Speed. _____ [Hz, r/min].

3.3.28.3 Rotor X Axis, Transverse Moment of Inertia. _____ g · cm².

3.3.28.4 Rotor Y Axis, Transverse Moment of Inertia. _____ g · cm².

3.3.28.5 Rotor Z Axis, Polar Moment of Inertia. _____ g · cm².

3.3.28.6 Gimbal(s) X Axis, Transverse Moment of Inertia. _____ g · cm².

3.3.28.7 Gimbal(s) Y Axis, Transverse Moment of Inertia. _____ g · cm².

3.3.28.8 Gimbal(s) Z Axis, Polar Moment of Inertia. _____ g · cm².

In the case of multi-gimbal DTGs, the moment of inertia for each gimbal or the combined inertia may be specified.

3.3.28.9 Figure of Merit (FOM). _____.

$$FOM = \frac{C}{\sum_{1}^{n} (A_n + B_n + C_n)}$$

where

C = rotor polar moment of inertia
A_n, B_n = transverse moment of inertia of the nth gimbal
C_n = polar moment of inertia of the nth gimbal

3.4 Mechanical Requirements

3.4.1 Exterior Surfaces. All exterior surfaces must withstand the environment specified herein and the handling expected in the normal course of operation, testing, and maintenance without deterioration that causes nonconformance to this specification.

Additional requirements controlling surface finish, workmanship, processing, etc, may be specified.

3.4.2 Outline and Mounting Dimensions. Outline and mounting dimensions, and accuracy requirements of mounting surface and reference index shall conform to [drawing number _____, Fig __].

A typical outline drawing is shown in Fig 3.

3.4.3 Gyro Axes. The X and Y gyro case axes are mutually perpendicular and are located by means of the gyro mounting surface and the reference index on the gyro case [notch, pin, scribe line, _____]. The Z axis is perpendicular to the gyro mounting surface (see Fig 3). The nonrotating coordinate frame of the spinning rotor is nominally aligned to the gyro case axes (see Fig 2).

3.4.4 Weight. _____ ± _____ [g, _____].

Specify those components such as cables, connectors, and electronics which are to be included in the weight.

3.4.5 Seal. The gyro shall be sealed so that the leak rate is less than _____ [cm³/s, _____] when subjected to a pressure of _____ ± _____ [Pa, _____] and gyro temperature of _____ ± _____ °C for a minimum of _____ minutes.

Copyright The Institute of Electrical and Electronics Engineers, Inc.
Provided by IHS under license with IEEE
No reproduction or networking permitted without license from IHS

Not for Resale

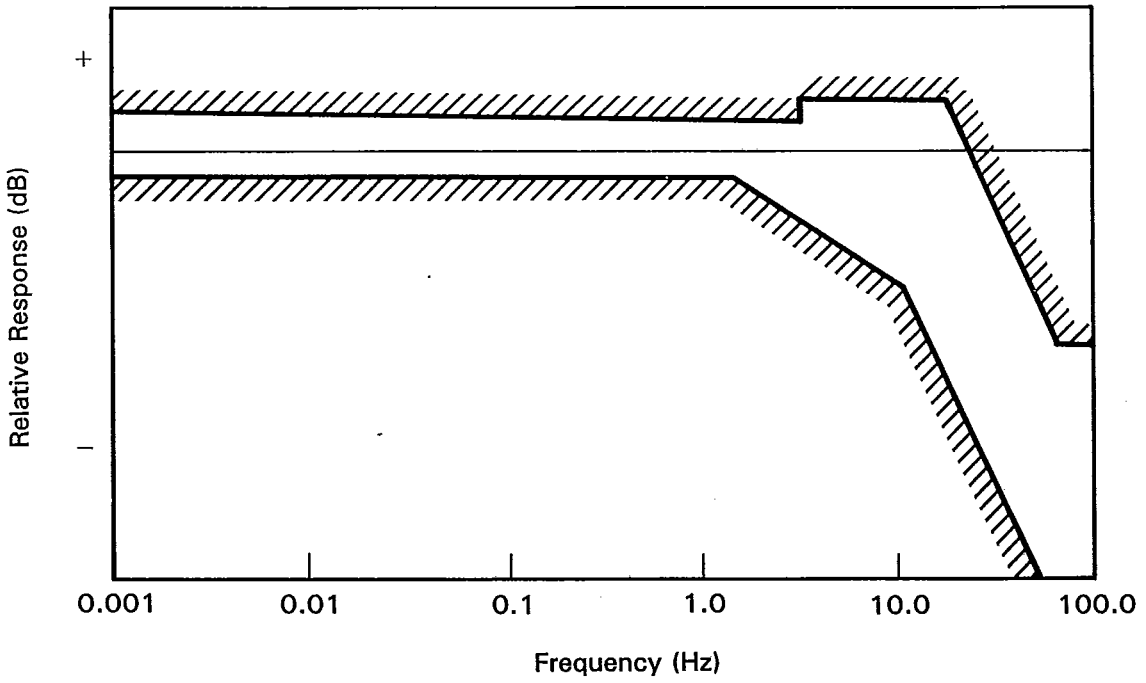

Amplitude Response

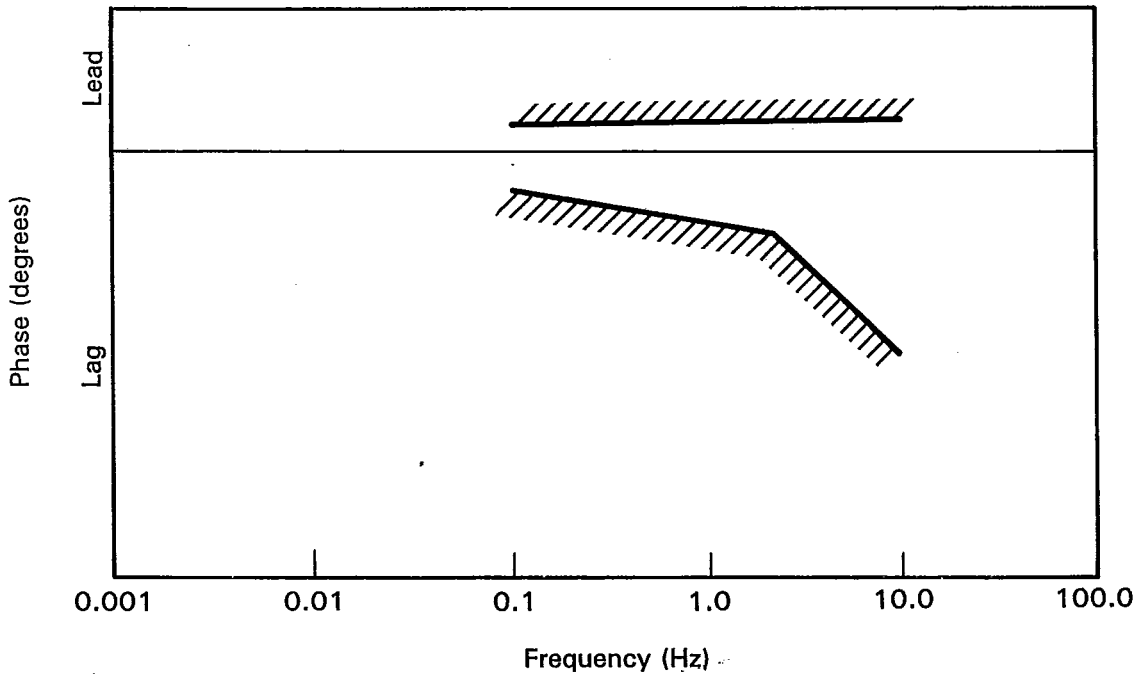

Phase Response

Fig 1
Closed-Loop Frequency Response

Copyright The Institute of Electrical and Electronics Engineers, Inc.
Provided by IHS under license with IEEE
No reproduction or networking permitted without license from IHS

Not for Resale

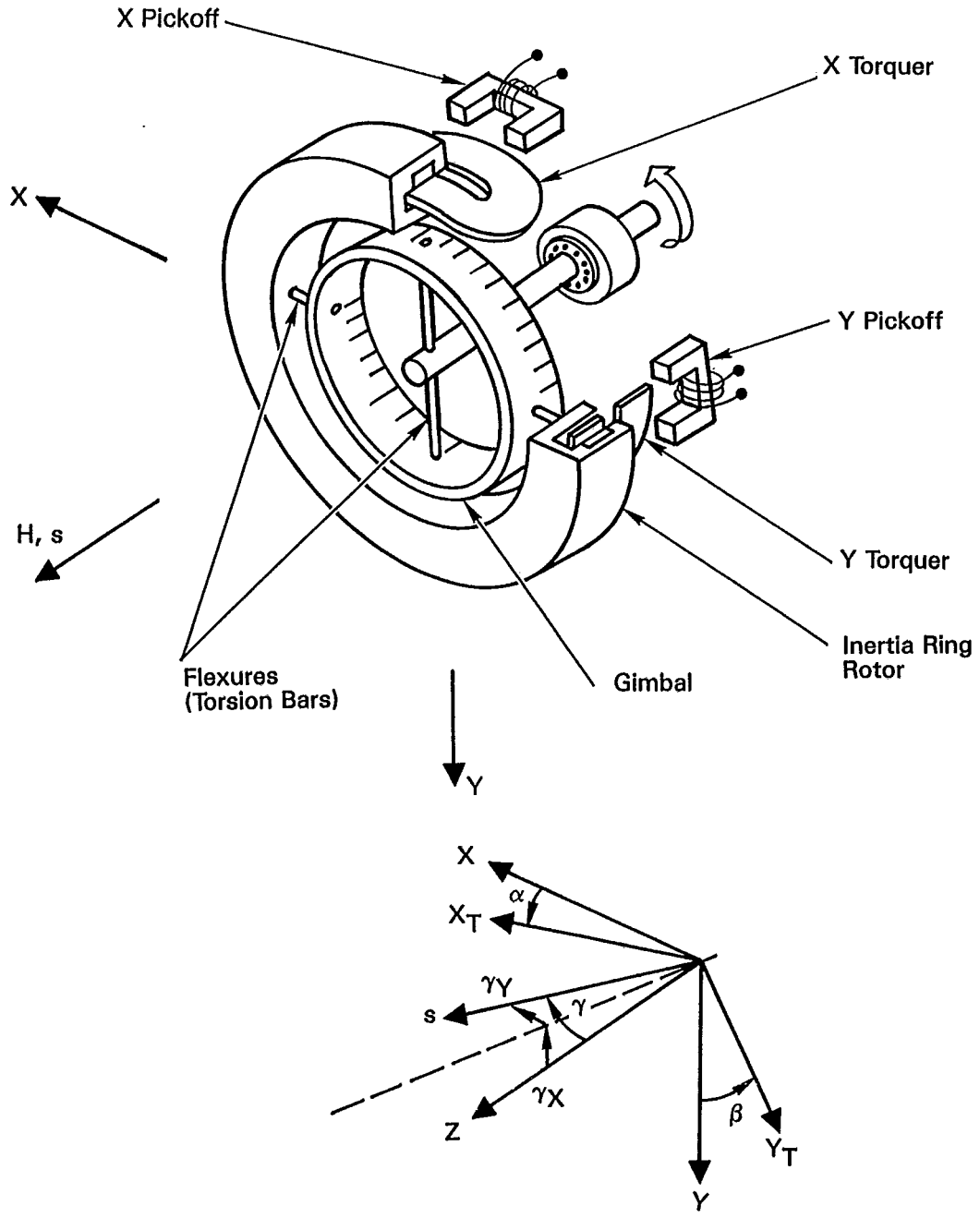

Fig 2
DTG Mechanical Schematic and Misalignment Angles

Copyright The Institute of Electrical and Electronics Engineers, Inc.
Provided by IHS under license with IEEE
No reproduction or networking permitted without license from IHS

Not for Resale

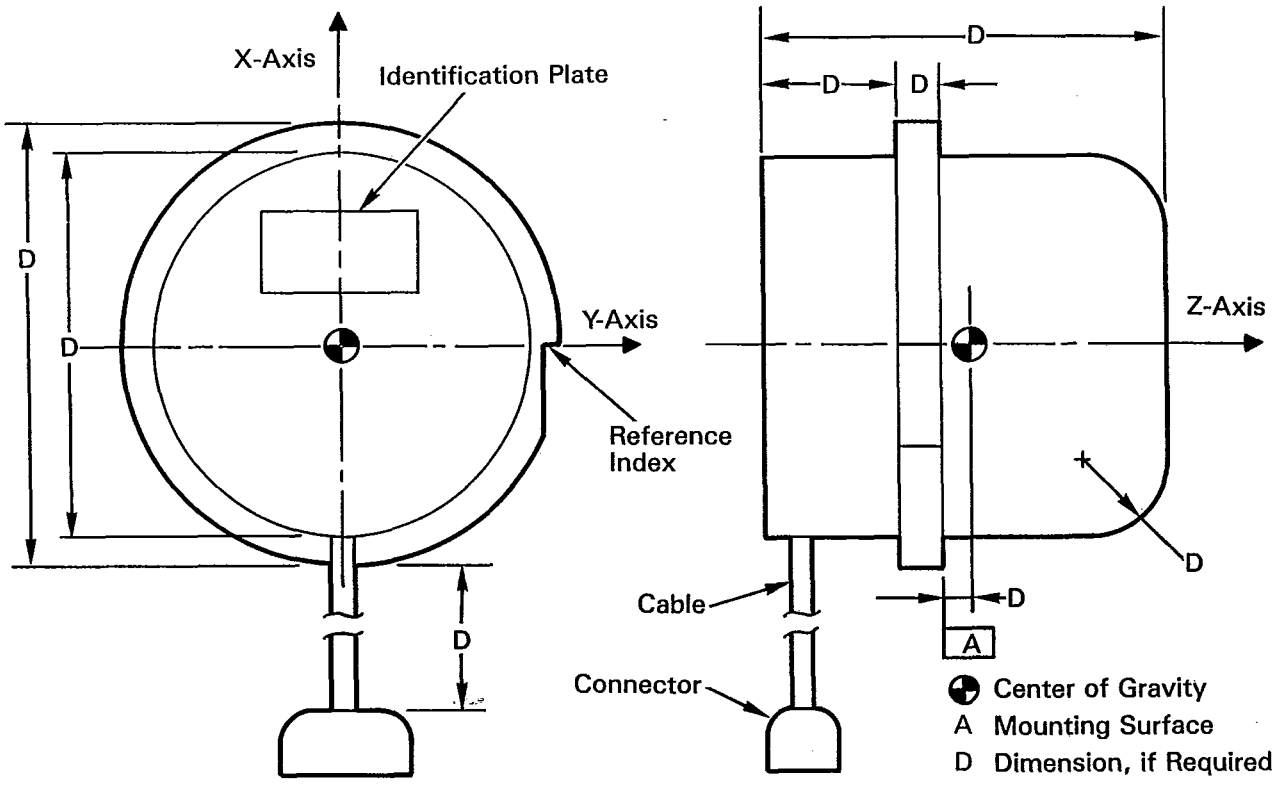

Fig 3
Typical DTG Outline Drawing

3.4.6 Internal Mechanical Configuration

Tuning provisions, shaft support, rotor suspension, vibration isolation, etc, shall be specified to the extent necessary.

3.4.7 Identification of Product. The gyro shall be identified on the surface and in the manner indicated in [drawing number ____, Fig ____]. Identification shall include:

(1) Dynamically tuned gyro
(2) Specification number
(3) Unit serial number
(4) Axis identification marking as shown in [drawing number ____, Fig ____]
(5) Manufacturer's name or symbol

The purchase agreement may require additional identification such as date of manufacture.

3.5 Electrical Requirements

3.5.1 Schematic. The electrical circuits shall be connected as shown in [drawing number ____, Fig ____].

The schematic may include preamplifiers, temperature sensing circuits, heater circuits, trim components, test points, etc, as part of the DTG. Polarity, phasing, and axes identification of appropriate circuits shall be shown as well as their inter-connections with the electronics capture loops. A typical electrical schematic is shown in Fig 4.

3.5.2 Circuit Excitations and Impedances. The circuit excitations and impedances shall be as specified hereafter.

3.5.2.1 Spin Motor

(1) Excitation, line to line: ____ ± ____ V [rms, ____] [dc, ____ phase, ____ ± ____ Hz].

Copyright The Institute of Electrical and Electronics Engineers, Inc.
Provided by IHS under license with IEEE
No reproduction or networking permitted without license from IHS

Not for Resale

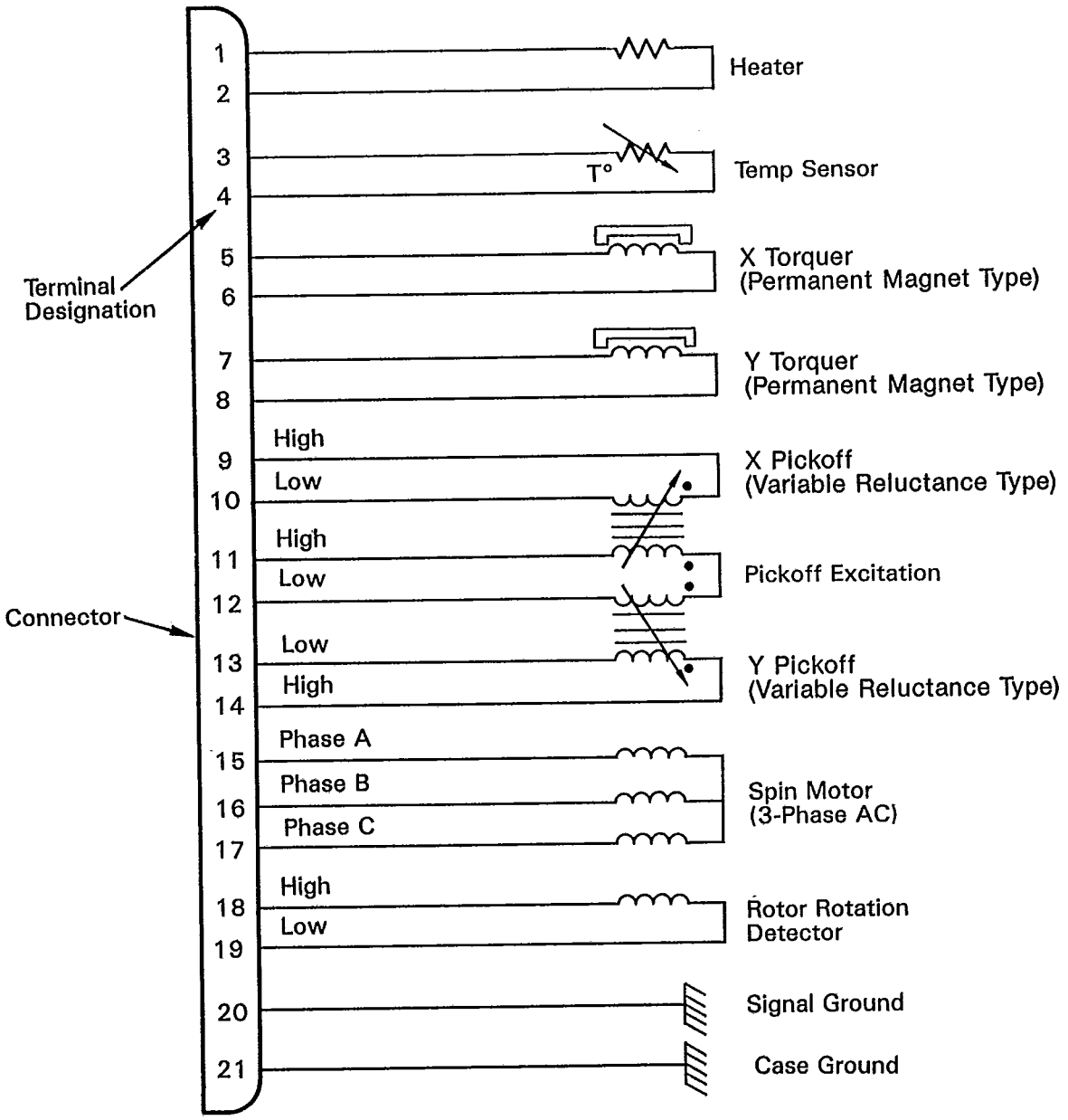

NOTES: (1) Phasing and polarities of pickoffs, torquers, motor and rotation detector must be specified.
(2) Alternate or additional circuit elements must be shown if required; such as pickoff amplifiers with supply voltages, optical or capacitance pickoffs, pickoff load resistors, solenoid torquers, torquer trim components, 2-phase or permanent-magnet motors, safety thermostats, heater terminal pins, etc.

Fig 4
Typical DTG Electrical Schematic

Copyright The Institute of Electrical and Electronics Engineers, Inc.
Provided by IHS under license with IEEE
No reproduction or networking permitted without license from IHS
Not for Resale

Specify wave shape if other than sinusoidal, also grounding, harmonic content, ripple, power supply impedance, etc, if required. The frequency may be selected to reduce the in-phase-spring-rate drift rate for each individual gyro.

(2) Starting current: _____ mA maximum.

A higher voltage, a different frequency, and the application time may be specified for starting if required.

(3) Starting power: _____ W maximum.
(4) Running current: _____ mA maximum.
(5) Running power: _____ W maximum.

As an alternate to running current, and running power, running voltamperes may be specified, or the specification may state: The impedance of the spin motor winding shall be _____ ± _____ Ω [+, -] j _____ ± _____ Ω when measured at _____ Hz and at [operating temperature, _____ ± _____ °C].

(6) Phase splitting capacitor: _____ ± _____ F.

3.5.2.2 Pickoffs

(1) Excitation: _____ ± _____ [V, mA] [rms, ___] _____ ± _____ Hz.

Phase locking with spin motor excitation may be required.

(2) Harmonics: _____ percent maximum of fundamental.

Specify wave shape if other than sinusoidal.

(3) Primary impedances: Each primary impedance as measured with the secondary [open circuited, connected to the load impedance specified in (5) below] shall be _____ ± _____ Ω [+, -] j _____ ± _____ Ω when measured at _____ Hz and at [operating temperature, _____ ± _____ °C].
(4) Secondary impedances: Each secondary impedance measured with the primary [open circuited, short circuited] shall be _____ ± _____ Ω [+, -] j _____ ± _____ Ω, when measured at _____ Hz and at [operating temperature, _____ ± _____ °C].
(5) Load impedances: _____ ± _____ Ω [+, -] j _____ ± _____ Ω.
(6) Carrier phase shift, primary to secondary voltage: _____ ± _____°, when connected to the specified load.

Characteristics of other than variable reluctance pickoffs such as optical pickoffs, capacitance pickoffs, tuned resonance pickoffs, may be specified. Power supply requirements for pickoff preamplifiers as applicable, may also be specified.

3.5.2.3 Temperature Control

(1) Warm-up heater excitation: _____ ± _____ V [dc, ac, _____ ± _____ Hz].
(2) Warm-up heater power: _____ W maximum.
(3) Control heater excitation: _____ ± _____ V [dc, ac, _____ ± _____ Hz].
(4) Control heater power: _____ W maximum.

The output of the temperature sensor(s) shall be _____ ± _____ [Ω, V, μA, _____] in the operating temperature range specified in 3.3.5. The temperature rise of the sensor due to self-heating shall not exceed _____ °C at _____ mA. The scale factor of the temperature sensor(s) shall be [+, -] _____ ± _____ [Ω/°C, V/°C, μA/°C _____] at operating temperature.

Resistance Temperature Detectors (RTD), thermistors, thermocouples, or other means of temperature control may be specified.

3.5.2.4 Torquers. The resistance of each torquer shall be _____ ± _____ Ω and the inductance of each shall be _____ ± _____ mH at [operating temperature, _____ ± _____ °C].

For variable reluctance torquers, specify excitation winding current or voltage, and impedances of both windings.

3.5.2.5 Rotor Rotation Detector

(1) Impedance: _____ Ω, maximum, when measured at _____ Hz.
(2) Load: _____ Ω, minimum.

3.5.3 Test Points

Specify the test points required for monitoring and testing of the DTG. These may include those for excitation voltages, control signals, or temperature sensor(s). Any special buffering or scaling requirements should be specified.

3.5.4 Grounding

Specify electrical grounding design requirements (for example, requirements for isolation between input, output, and power returns and the grounding requirements for shields, gyro case and critical components).

Copyright The Institute of Electrical and Electronics Engineers, Inc.
Provided by IHS under license with IEEE
No reproduction or networking permitted without license from IHS

Not for Resale

3.5.5 Closed-Loop Output Signals. When the gyro is operated in the closed-loop mode with associated electronics one of the following types of output signals is required:

3.5.5.1 Analog

Specify the characteristics of the analog output such as impedance characteristics, buffering, external drive capabilities, metering resistors, etc.

3.5.5.2 Digital

Specify the type and characteristics of the output signals required when the gyro is operating with a pulse torquing capture loop. The method of pulse torquing such as binary, ternary, etc, should be specified. The required waveshape should also be specified (see Fig 5 for an example of a waveshape specification).

3.5.6 Dielectric Strength. The leakage current shall not exceed _____ mA when _____ ± _____ V rms, at _____ Hz, are applied between isolated circuits, and between the case(s) and circuits isolated from the case(s), for _____ ± _____ s.

Different voltages may be specified for different circuits. In some instances, lower voltages may be specified for subsequent tests.

3.5.7 Insulation Resistance. The insulation resistance between isolated interface circuits and between the case(s) and circuits isolated from the case(s) shall not be less than _____ MΩ measured at _____ ± _____ V dc, applied for _____ ± _____ s.

Different voltages may be specified for different circuits.

3.5.8 Electromagnetic Interference. The electromagnetic emissions shall conform to _____.

Describe the requirements. In the United States, a common standard is MIL-STD-461C-1987 [5].

3.5.9 Magnetic Leakage. The magnetic leakage shall not exceed _____ [mT, G] at a distance of _____ ± _____ [cm, in] from the DTG in any direction.

3.6 Environmental Requirements

This section contains environmental requirements only. Test procedures that are to be used, including required combinations of environments, are covered in 4.6.

3.6.1 Storage. The gyro shall conform to all requirements of this specification after exposure to the following environments or specified combinations thereof, while packaged as specified in Section 5.

The procuring organization shall list the applicable environments from 3.6.4 and specify the limits for each based on the storage conditions expected.

3.6.2 Transport. The gyro shall conform to all requirements of this specification after exposure to the following environments or specified combinations thereof, while packaged as specified in Section 5.

The procuring organization shall list the applicable environments from 3.6.4 and specify the limits for each based on the transportation conditions expected.

3.6.3 Operation

In order to properly specify the environmental requirements for a gyro, three different sets of environments or environmental limits as defined in 3.6.3.1, 3.6.3.2, and 3.6.3.3 may need to be described. A guide for the selection of the environments most often included in each of the three sets can be obtained by referring to Table 3 of this document.

3.6.3.1 Operating Environment. The gyro shall conform to all requirements of this specification during exposure to the following environments or specified combinations thereof (except during exposure to _____ where the deviations of this specification are given in the following sections).

Where degraded performance is to be allowed, include the parenthetical phrase in 3.6.3.1 and list in the blank space those environments for which degraded performance is allowed. The procuring organization should list the applicable environments from 3.6.4 and specify the limits for each based on the conditions expected when the gyro is in use. For those environments where degraded performance is allowed, specify the performance deviation in the section that specifies the environment.

3.6.3.2 Survival Environment, Operating. The gyro shall conform to all requirements of this specification after the operating gyro has been

Copyright The Institute of Electrical and Electronics Engineers, Inc.
Provided by IHS under license with IEEE
No reproduction or networking permitted without license from IHS

Not for Resale

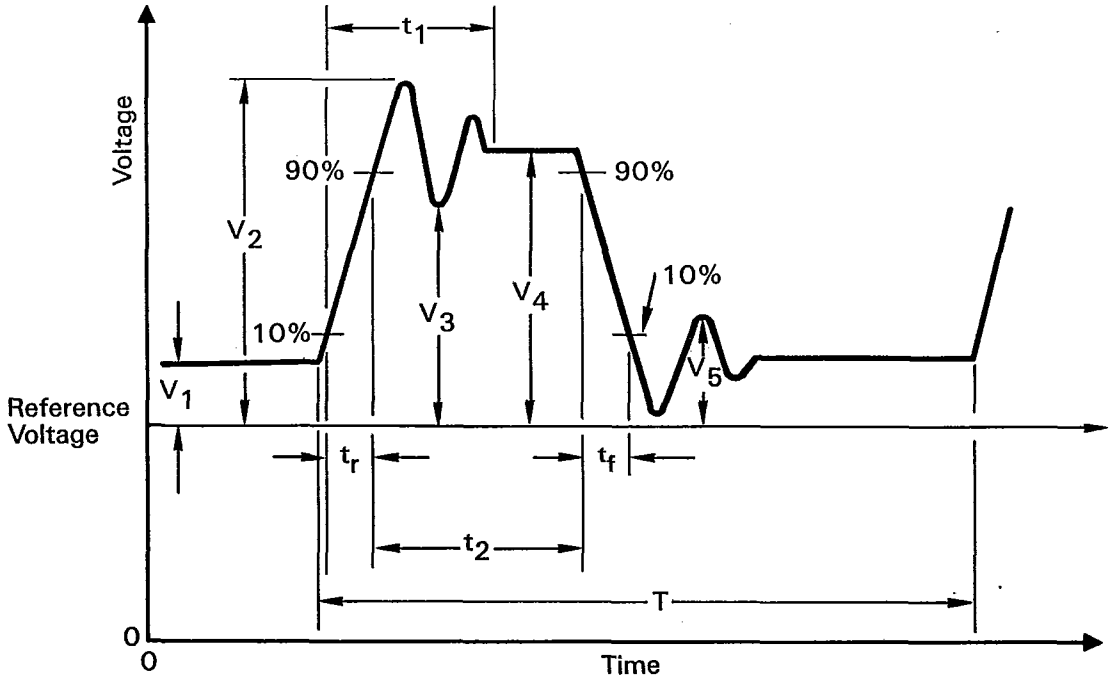

	Units	Maximum	Minimum	Remarks
V_1	volts	_____	_____	steady-state low voltage
V_2	volts	_____	N/A	overshoot voltage
V_3	volts	N/A	_____	undershoot voltage
V_4	volts	_____	_____	steady-state high voltage
V_5	volts	_____	N/A	maximum low voltage transient
tr	seconds	_____	_____	rise time
tf	seconds	_____	_____	fall time
t_1/t_2	—	_____	N/A	ratio of the TURN-ON transient time to required ON time
t_2	seconds	_____	_____	duration of high voltage ON time
t_2/T	—	_____	_____	$t_2/T)(100)$ = duty cycle
T	seconds	_____	_____	waveform period

N/A — not applicable

Fig 5
Pulse Wave Shape Requirements

exposed to the following environments or specified combinations thereof.

The procuring organization shall list the applicable environments from 3.6.4 and specify the limits for each based on the conditions expected when the gyro is operating but not in use.

3.6.3.3 Survival Environment, Nonoperating. The gyro shall conform to all requirements of this specification after the nonoperating gyro has been exposed to the following environments or specified combinations thereof.

The procuring organization shall list the applicable environments from 3.6.4 and specify the limits for each based on the conditions expected when the gyro is not operating. Such conditions are expected to occur when the gyro is mounted in the system and the system is stored or transported in severe environments.

3.6.4 Environments. Environmental characteristics shall be as specified hereafter.

This list is intended as an aid to the selection of the applicable environments under 3.6.1, 3.6.2, and 3.6.3.

Copyright The Institute of Electrical and Electronics Engineers, Inc.
Provided by IHS under license with IEEE
No reproduction or networking permitted without license from IHS
Not for Resale

3.6.4.1 Vibration

3.6.4.1.1 Linear. Sinusodial: _____ [cm, inches] DA (double amplitude) _____ to _____ Hz; _____ [m/s^2, g] peak _____ to _____ Hz. Sweep rate: _____ minutes per octave (continuous). Exposure time: _____ per axis.

3.6.4.1.2 Angular. Sinusoidal: _____ rad/s^2 _____ to _____ Hz. Sweep rate shall be _____ minutes per octave (continuous). Exposure ime: _____ per axis.

> Axes shall be defined. When available, supply the specific vibration characteristics including dwell frequencies, frequency spectrum, time duration, etc.
>
> If exposure to random vibration is required, power spectral density, bandwidth, peak acceleration level and duration shall be specified.

3.6.4.2 Mechanical Shock. _____ [m/s^2, g] peak, _____ wave shape, _____ ms, _____ shock(s) per axis.

> Gyro axes and direction of shock shall be defined. A figure may be included to describe more complex waveforms. A shock spectrum may be specified.

3.6.4.3 Linear Acceleration. _____ [m/s^2, g], exposure time _____.

> Gyro axes and direction of acceleration shall be defined.

3.6.4.4 Mechanical Overload. The gyro shall perform within specification after positive and negative angular rates of _____ [rad/s, °/s] have been applied about the _____ [axis, axes] for _____ seconds a total of _____ times per direction.

The gyro shall perform within specification after positive and negative angular accelerations of _____ [rad/s^2, $°/s^2$] have been applied about the _____ [axis, axes] for _____ seconds a total of _____ times per direction.

3.6.4.5 Temperature. _____ °C to _____ °C.

> The specific point or points on the case where the temperature is measured, the temperature gradients, if any, and the absolute temperature should be specified.

3.6.4.6 Thermal Shock. _____ °C to _____ °C within _____ seconds.

> If exposure to cyclic conditions is required, temperature limits for each level, dwell times and sequence shall be specified. A figure may be included to describe more complex profiles.

3.6.4.7 Thermal Radiation. _____ W/cm^2 of radiation at wavelengths from _____ to _____ meters; exposure time: _____.

3.6.4.8 Ambient Air Pressure. _____ [Pa, torr, in Hg, lbf/in^2] to _____ [Pa, torr, in Hg, lbf/in^2].

3.6.4.9 Acoustic Noise. _____ dB referenced to $2 \cdot 10^{-5}$ Pa, _____ to _____ Hz; exposure time: _____.

> When available, supply the specific decibel level versus frequency for the application. Sweep rate may be specified as _____ minutes per octave (continuous), if applying sinusoidal acoustic noise.

3.6.4.10 Humidity. _____ percent relative humidity for _____ hours obtained from steam or distilled water having a pH value of _____ ± _____.

3.6.4.11 Air Currents. _____ [m/s, ft/s].

> Gyro axes and direction of air flow shall be defined.

3.6.4.12 Fungus

> Specify fungi organisms, length of exposure and temperature and humidity conditions during exposure.

3.6.4.13 Salt Spray. _____ percent salt solution; exposure time: _____.

3.6.4.14 Nuclear Radiation. _____ [J/kg, rd] with an exposure of _____ [(J/kg)/s, rd/s] or combinations of _____ particles at a fluence of _____ $/cm^2$ with energy greater than _____ MeV.

3.6.4.15 Magnetic Fields. _____ [mT, G]; exposure time; _____.

> The effects of magnetic fields on drift rates may be significant, in which case appropriate tests and data reduction should be specified. Gyro axes and direction of field shall be defined. If exposure to varying fields is required, the nature of the variation shall be described. Demagnetization may be necessary following exposure.

3.6.4.16 Electromagnetic Fields. Electromagnetic fields shall conform with _____.

> In the United States, a common standard is MIL-STD-461C-1987 [5].

Copyright The Institute of Electrical and Electronics Engineers, Inc.
Provided by IHS under license with IEEE
No reproduction or networking permitted without license from IHS

Not for Resale

3.6.4.17 Sand and Dust. _____ [g/m^3, g/ft^3] at a velocity of _____ ± _____ [m/s, ft/min]; exposure time: _____. Relative humidity not to exceed _____ percent.

Specify particle size, shape and chemical composition.

3.6.4.18 Solar Radiation. _____ ± _____ [W/m^2, W/ft^2] of wavelength _____ to _____ meters; exposure time: _____.

Describe distribution of power density versus wavelength.

3.6.4.19 Rain. _____ ± _____ [mm/h, in/h] consisting of droplets having a minimum diameter of _____ mm; exposure time: _____.

3.6.4.20 Excitation Voltage. The excitation voltage and frequency required shall conform to _____.

In the United States, a common standard is MIL-STD-704D-1988 [7].

3.6.4.21 Life

3.6.4.21.1 Storage. _____ [months, years].

3.6.4.21.2 Operating. _____ hours.

3.6.4.21.3 Start Cycles. _____ minimum.

Life may need to be specified under other conditions.

3.7 Reliability

3.7.1 Reliability Program. The reliability program required shall conform with _____.

In the United States, a common standard is MIL-STD-785B-1986 [9].

3.7.2 Mean Time Between Failure (MTBF). The MTBF lower _____ percent confidence limit shall be a minimum of _____ hours.

4. Quality Assurance Provisions

4.1 Classification of Tests. Inspection and testing shall be classified as follows:

(1) *Acceptance Tests.* Acceptance tests are those tests accomplished on gyros submitted for acceptance under contract.

(2) *Qualification Tests.* Qualification tests are those tests accomplished on gyros submitted for qualification as a satisfactory product.

(3) *Reliability Tests.* Reliability tests are those tests performed to demonstrate the reliability specified in 3.7.

4.2 Acceptance Tests

4.2.1 Individual Tests. Each gyro shall be subjected to the following tests described under 4.6.

The list of individual tests shall be specified by the procuring organization based on individual requirements. Those tests that are usually specified as individual tests are listed in the following. A run-in period under specified conditions may be required before beginning individual tests.

(1) Examination of Product (Mechanical), see 4.6.1
(2) Examination of Product (Electrical), see 4.6.2
(3) Leak Test, see 4.6.3
(4) Polarity, see 4.6.4
(5) Operating Temperature Test Series, see 4.6.5
(6) Pickoff Test Series, see 4.6.6
(7) Torquer Test Series, see 4.6.7
(8) Rotor Rotation Detector, see 4.6.8
(9) Spin Motor Test Series, see 4.6.9
(10) Axis Alignment (Torquer Axes misalignment only), see 4.6.10
(11) Limit Stop, see 4.6.11
(12) Gyro Dynamic Time Constant, see 4.6.12
(13) Tuned Speed, see 4.6.13
(14) Acceleration — Insensitive Drift Rate and Acceleration — Sensitive Drift Rate Coefficients, see 4.6.14.1
(15) Acceleration — Squared — Sensitive Drift Rate Coefficients, see 4.6.14.2
(16) Random Drift Rate, see 4.6.14.8
(17) Output Noise, see 4.6.15

There are other individual tests that are not generally specified but that may be included under individual tests based on specific applications. In some cases the gyros are subjected to specific environmental tests.

4.2.2 Sampling Plans and Tests

4.2.2.1 Sampling Plans

This section is intended to designate a sampling plan if required. Sampling plans are up to the discretion of the procuring organization based upon usage, size of contract, individual requirements, etc.

Copyright The Institute of Electrical and Electronics Engineers, Inc.
Provided by IHS under license with IEEE
No reproduction or networking permitted without license from IHS

Not for Resale

Gyros selected in accordance with specification _____ shall be subject to the tests specified in 4.2.2.2 as described in 4.6.

In the United States, selection according to MIL-STD-105D-1964 [3] is common.

4.2.2.2 Sampling Tests

In addition to the individual tests listed in 4.2.1, the procuring organization shall specify from 4.6 those tests that shall be performed on gyros selected in accordance with 4.2.2.1. Sampling plan units may be used for delivery unless the procuring agency specifies life tests or other destructive type tests under the sampling plan.

4.2.2.3 Rejection and Retest. When one item selected from a production run fails to meet the specification, the procuring organization shall be immediately notified of the failure, and at the discretion of the procuring organization no items still on hand or later produced shall be accepted until the extent and cause of failure are determined. After corrections have been made, all necessary tests shall be repeated. For operational and production reasons, individual tests may be continued pending the investigation.

Other requirements suitable to an individual contract may be substituted for this section.

4.2.2.4 Defects in Item Already Accepted. The investigation of a test failure could indicate that defects may exist in items already accepted. If so, the manufacturer shall fully advise the procuring organization of defects likely to be found and of methods for correcting them.

4.3 Qualification Tests

4.3.1 Qualification Test Samplings. A sample of _____ gyros manufactured in accordance with the requirements of this specification shall be subjected to qualification tests specified herein at an activity designated by the procuring organization.

If the product is later modified in any way, the modified form shall be subjected to and pass those qualification tests designated by the procuring organization.

The qualification test samples shall be identified with the manufacturer's own part number and any other information required by the procuring organization.

4.3.2 Qualification Tests

The procuring organization will specify from 4.6 those tests, or combination of tests, that shall be performed on gyros submitted for qualification.

4.4 Reliability Tests

The reliability tests may be performed at the gyro or the subassembly level, or both.

4.4.1 Run-In. Each gyro shall be subjected to a run-in period of _____ hours under the following conditions.

Specify environment and operating conditions. Consideration shall be given to not compromising the useful operating life by excessive test time during run-in.

4.4.2 Demonstration Testing. The MTBF requirements of 3.7.2 shall be demonstrated by testing _____ units for _____ hours each, and a minimum of _____ hours combined.

Stress level test shall conform with _____.

In the United States, testing in accordance with MIL-STD-781D-1986 [8] is common.

Other methods of demonstration testing may be selected at the discretion of the procuring organization. A demonstration test plan shall be prepared to define test conditions, failures, types of tests, etc.

4.5 Test Conditions and Equipment

The procuring organization shall specify from Part II, Section 9, the nominal test conditions and test equipment required. The conditions shall apply to all tests unless otherwise specified. When a test condition is specified, the complete test condition shall be detailed in this specification. The test equipment required shall also be listed by name and model, part number, or performance requirement.

4.6 Test Methods

Instructions for performing specified tests in this section are detailed in Part II, Section 10. When a test is specified, the complete test method shall be detailed in this specification, including requirements to be met to determine satisfactory performance. A test method should not be listed in 4.6 unless a requirement exists

Copyright The Institute of Electrical and Electronics Engineers, Inc.
Provided by IHS under license with IEEE
No reproduction or networking permitted without license from IHS
Not for Resale

in Section 3 of this specification. Specific applications may require special tests such as combined environments.

4.6.1 Examination of Product (Mechanical)
4.6.2 Examination of Product (Electrical)
4.6.2.1 Impedances
4.6.2.2 Dielectric Strength
4.6.2.3 Insulation Resistance
4.6.3 Leak Test
4.6.4 Polarity
4.6.5 Operating Temperature Test Series
4.6.5.1 Temperature Sensor Characteristics
4.6.5.2 Operating Temperature
4.6.6 Pickoff Test Series
4.6.6.1 Scale Factor and Scale Factor Composite Error
4.6.6.2 Offset
4.6.6.3 Quadrature
4.6.6.4 One-N (1N) Modulation
4.6.7 Torquer Test Series
4.6.7.1 Command Rate Scale Factor
4.6.7.2 Command Rate Scale Factor Errors
4.6.7.3 Command Rate Scale Factor Sensitivities
4.6.7.4 Maximum Command Rate
4.6.7.5 Continuous Command Rate
4.6.7.6 Torquer Time Constant
4.6.8 Rotor Rotation Detector
4.6.9 Spin Motor Test Series
4.6.9.1 Run-Up Time
4.6.9.2 Run-Down Time
4.6.9.3 Power Consumption
4.6.10 Axis Alignment
4.6.11 Limit Stop
4.6.12 Dynamic Time Constant
4.6.13 Tuned Speed
4.6.14 Drift Rate Test Series
4.6.14.1 Acceleration-Insensitive Drift Rate and Acceleration Sensitive Drift Rate Coefficients
4.6.14.2 Acceleration-Squared-Sensitive Drift Rate Coefficients
4.6.14.3 Anisoinertia Drift Rate Coefficient
4.6.14.4 Cross-Coupling Drift Rate
4.6.14.5 Synchronous-Vibration Sensitivity
4.6.14.6 Torquer-Current Rectification Drift Rate
4.6.14.7 Rotor Speed Sensitivity
4.6.14.8 Random Drift Rate
4.6.15 Output Noise
4.6.16 Dynamic Response Test Series
4.6.16.1 Open-Loop Response
4.6.16.2 Closed-Loop Step Response
4.6.17 Generated Fields
4.6.17.1 Electromagnetic Interference
4.6.17.2 Electromagnetic Compatibility
4.6.17.3 Magnetic Leakage
4.6.18 Environmental Test Series
4.6.18.1 Temperature
4.6.18.2 Excitation Voltage
4.6.18.3 Mechanical Shock
4.6.18.4 Thermal Shock
4.6.18.5 Vibration
4.6.18.6 Linear Acceleration
4.6.18.7 Mechanical Overload
4.6.18.8 Life
4.6.18.9 Fungus
4.6.18.10 Humidity
4.6.18.11 Salt Spray
4.6.18.12 Acoustic Noise
4.6.18.13 Thermal Radiation
4.6.18.14 Air Currents
4.6.18.15 Ambient Air Pressure
4.6.18.16 Nuclear Radiation
4.6.18.17 Magnetic Fields
4.6.18.18 Electromagnetic Fields
4.6.18.19 Sand and Dust
4.6.18.20 Solar Radiation
4.6.18.21 Rain
4.6.19 Turn-On and Warm-Up Times
4.6.19.1 Turn-On Time
4.6.19.2 Warm-Up Time

4.7 Data Submittal

The format for all data organization and the method of submittal shall be specified.

5. Preparation for Delivery

Give detailed procedures for
(1) Preservation and packaging
(2) Packing
(3) Marking or shipping containers
A common United States specification covering preservation and packaging is MIL-STD-116J-1988 [4].

6. Notes

6.1 Intended Use

Description of application if it is considered necessary or helpful.

Copyright The Institute of Electrical and Electronics Engineers, Inc.
Provided by IHS under license with IEEE
No reproduction or networking permitted without license from IHS
Not for Resale

6.2 Ordering Data

Procuring documents should specify the following:

(1) Title, number, and date of this specification
(2) Level of packaging and packing desired
(3) Mode of shipment required
(4) Whether sampling plan tests are to be conducted
(5) Number of preproduction samples to be submitted for qualification testing
(6) Reliability program
(7) Data package

6.3 Model Equations. Two interrelated model equations of the DTG in the capture mode mathematically relate case angular motions and inertial acceleration inputs to the command rate torquer currents through a servo loop whose dynamic response is specified in Fig 1. The sign conventions consistent with the dynamics of the DTG are as follows: a positive current applied to the X torquer will balance a positive input rate about the Y axis; a positive current applied to the Y torquer will balance a negative input rate about the X axis. The terms in the assumed model equations have the dimension of angular velocity. The equations are:

Model Equations

Y Axis

$$\frac{1}{H}\left[I\ddot{\theta}_x - C(\dot{\theta}_X - \dot{\theta}_x) - K_D(\theta_X - \theta_x) - K_Q(\theta_Y - \theta_y)\right]$$

=	$\omega_Y + \omega_X\beta + \omega_Z\gamma_X$	INPUT RATE
+	$D(y)_F$	ACCELERATION-INSENSITIVE DRIFT RATE
+	$D(y)_X a_X + D(y)_Y a_Y + D(y)_Z a_Z$	ACCELERATION-SENSITIVE DRIFT RATE
+	$D(y)_{XZ} a_X a_Z + D(y)_{YZ} a_Y a_Z$	ACCELERATION-SQUARED-SENSITIVE DRIFT RATE
+	$\frac{(J-I)}{H}\omega_y\omega_Z$	ANISOINERTIA DRIFT RATE
+	$\theta_x\omega_Z$	CROSS-COUPLING DRIFT RATE
-	$K_{TX} i_X$	COMMAND RATE

X Axis

$$-\frac{1}{H}\left[I\ddot{\theta}_y - C(\dot{\theta}_Y - \dot{\theta}_y) - K_D(\theta_Y - \theta_y) + K_Q(\theta_X - \theta_x)\right]$$

=	$\omega_X + \omega_Y\alpha - \omega_Z\gamma_Y$	INPUT RATE
+	$D(x)_F$	ACCELERATION-INSENSITIVE DRIFT RATE
+	$D(x)_X a_X + D(x)_Y a_Y + D(x)_Z a_Z$	ACCELERATION-SENSITIVE DRIFT RATE
+	$D(x)_{XZ} a_X a_Z + D(x)_{YZ} a_Y a_Z$	ACCELERATION-SQUARED-SENSITIVE DRIFT RATE
+	$\frac{(J-I)}{H}\omega_x\omega_Z$	ANISOINERTIA DRIFT RATE
-	$\theta_y\omega_Z$	CROSS-COUPLING DRIFT RATE
+	$K_{TY} i_Y$	COMMAND RATE

Copyright The Institute of Electrical and Electronics Engineers, Inc.
Provided by IHS under license with IEEE
No reproduction or networking permitted without license from IHS

Not for Resale

where

I = effective rotor transverse moment of inertia
H = rotor angular momentum
θ_x = angular displacement of the rotor about the x axis with respect to inertial space
θ_X = angular displacement of the case about the X axis with respect to inertial space
θ_y = angular displacement of the rotor about the y axis with respect to inertial space
θ_Y = angular displacement of the case about the Y axis with respect to inertial space
C = rotor damping coefficient about an axis in the plane normal to the rotor spin axis
K_D = in-phase spring rate, $\frac{\Delta N}{FOM}$
ΔN = deviation from tuned speed
FOM = figure of merit
K_Q = quadrature spring rate
$\omega_X, \omega_Y, \omega_Z$ = angular velocity with respect to inertial space of the case about the X, Y, and Z axes
α = misalignment of the X torquer axis (X_T) about the Z axis, with respect to the case X axis. A positive misalignment corresponds to a positive rotation of X_T about the Z axis (refer to Fig 2)
β = misalignment of the Y torquer axis (Y_T) about the Z axis, with respect to the case Y axis. A positive misalignment corresponds to a positive rotation of Y_T about the Z axis (refer to Fig 2)
γ = misalignment of the rotor spin axis with respect to the Z axis (refer to Fig 2)
γ_X = misalignment of the rotor spin axis about the X axis with respect to the Z axis. γ_X is a component of γ. A positive misalignment corresponds to a positive rotation of s about the X axis (refer to Fig 2)
γ_Y = misalignment of the rotor spin axis about the Y axis with respect to the Z axis. γ_Y is a component of γ. A positive misalignment corresponds to a positive rotation of s about the Y axis (refer to Fig 2)
$D(y)_X a_X$ = drift rate about the y axis, attributable to acceleration along the X axis, where $D(y)_X$ is a drift rate coefficient
$D(y)_Y a_Y$ = drift rate about the y axis, attributable to acceleration along the Y axis, where $D(y)_Y$ is a drift rate coefficient
$D(y)_Z a_Z$ = drift rate about the y axis attributable to acceleration along the Z axis where $D(y)_Z$ is a drift rate coefficient
$D(x)_X a_X$ = drift rate about the x axis attributable to acceleration along the X axis where $D(x)_X$ is a drift rate coefficient
$D(x)_Y a_Y$ = drift rate about the x axis attributable to acceleration along the Y axis where $D(x)_Y$ is a drift rate coefficient
$D(x)_Z a_Z$ = drift rate about the x axis attributable to acceleration along the Z axis where $D(x)_Z$ is a drift rate coefficient
$D(y)_{XZ} a_X a_Z$ = drift rate about the y axis attributable to acceleration along the X and Z axes where $D(y)_{XZ}$ is a drift rate coefficient.
$D(y)_{YZ} a_Y a_Z$ = drift rate about the y axis attributable to acceleration along the Y and Z axes where $D(y)_{YZ}$ is a drift rate coefficient
$D(x)_{XZ} a_X a_Z$ = drift rate about the x axis attributable to acceleration along the X and Z axes, where $D(x)_{XZ}$ is a drift rate coefficient
$D(x)_{YZ} a_Y a_Z$ = drift rate about the x axis attributable to acceleration along the Y and Z axes, where $D(x)_{YZ}$ is a drift rate coefficient
J = effective rotor polar moment of inertia
ω_x, ω_y = angular velocity with respect to inertial space of x and y axes
K_{TX}, K_{TY} = $(K_{TO} + K_{TN} + K_{TA} + K_{TC}(T - T_0))_{X,Y}$
= X, Y composite command rate scale factor
K_{T0} = nominal value of command rate scale factor
K_{TN} = command rate scale factor nonlinearity
K_{TA} = command rate scale factor asymmetry

Copyright The Institute of Electrical and Electronics Engineers, Inc.
Provided by IHS under license with IEEE
No reproduction or networking permitted without license from IHS
Not for Resale

K_{TC} = command rate scale factor temperature sensitivity
T = gyro temperature
T_0 = reference temperature
$i_{X,Y}$ = X,Y torquer current

Other symbols and terms used in the model equation are defined as follows:

X,Y,Z = gyro case axes (refer to Figs 2 and 3)
x,y = rotor axes (nonrotating) in a plane normal to the spin axis, s (refer to Fig 2)
a_X, a_Y, a_Z = acceleration components along the X, Y, and Z axes, respectively.

Where significant, other error sources in the DTG such as the following should be included in the model equations.

(1) Rotor imperfections such as rotor radial unbalance, gimbal pendulosity, or asymmetry of rotor inertias in the plane normal to the spin axis, can cause significant drift rate errors when the gyro is subjected to synchronous first (1N) and second (2N) wheel speed harmonic linear or angular oscillations. An internal source of these oscillations are bearing or rotor shaft mechanical imperfections.
(2) Imperfections in the flexures which could cause
  (a) drift-rate coefficient variations when the gyro orientation relative to acceleration inputs (for example, gravity) is changed, and
  (b) other anisoelastic or higher order drift terms that do not have sufficient significance to be included in the model equations (that is, the *minor compliance* terms).
(3) Imperfections in the pickoffs and torquers that could cause a large pickoff offset (the difference between the electrical and mechanical null positions of the rotor) which will increase the gyro susceptibility to variations in the gyro tuned speed.
(4) Sources which could cause anisoelastic or higher order drift errors.
(5) Detuning errors when the DTG is not operating at the *tuned speed* which could be caused by vibration, acceleration, temperature change, improper motor supply frequency, etc.

Performance of the DTG is also significantly influenced by application conditions (not part of this model equation) which include:

(1) Capture loop design (analog or digital, gain, frequency response, etc).
(2) Mounting conditions (flatness, dimensional stability, clamping pressure, thermal interface, etc).
(3) Interconnecting cables (noise, phase shift, etc).

Operation of the DTG at or near its nutation frequencies will cause large errors not described by the model equation.

Copyright The Institute of Electrical and Electronics Engineers, Inc.
Provided by IHS under license with IEEE
No reproduction or networking permitted without license from IHS
Not for Resale

813-88 4805702 0033454 6

Part II — Test Procedure

7. Scope

This test procedure describes the test requirements for _____ (model number, part number, revision letter (if any), other identification), specification number _____, manufactured by _____.

8. Description

The gyro considered in this document is a two-degree-of-freedom dynamically tuned gyro (DTG) which measures angular rate or displacement about two orthogonal axes. Dynamic tuning is accomplished by balancing the flexure suspension spring torques against gimbal inertial torques at a given rotor speed.

8.1 Angular Displacement Sensing. In the displacement-sensing mode, an angular input about an input axis (IA) results in a displacement of the case with respect to the gyro rotor neglecting error torques. Static equilibrium is reached in a typical platform application when the gyro pickoff signal causes an external servo to restore the gyro case to a null position. The DTG is normally used as an attitude reference element such as in platform applications.

8.2 Angular Rate Sensing. In the rate-sensing mode, an angular rate about an IA tends to produce an angular displacement about that IA. The resulting pickoff signal is applied through an external capture loop to the orthogonal gyro torquer which precesses the gyro rotor to a null position. Neglecting error torques, static equilibrium is reached when the precession rate about the IA is equal to the input rate. The torquer current provides an output signal that is a function of the angular rate about the IA.

8.3 Model Equation. The dynamics of the gyro are expressed by the equations given in 6.3.

9. Test Conditions and Test Equipment

9.1 Standard Test Conditions. Unless otherwise stated, the following conditions apply.

9.1.1 Ambient Environment

9.1.1.1 Atmospheric Conditions

(1) Pressure: _____ ± _____ [Pa, in Hg]
(2) Ambient temperature: _____ ± _____ °C
(3) Relative humidity: _____ to _____ percent

9.1.1.2 Magnetic Field

(1) Horizontal component: _____ [mT, G] maximum
(2) Vertical component: _____ [mT, G] maximum
(3) Method of measurement shall be as specified in _____.

9.1.1.3 Radiation

List type of radiation and applicable intensity limits.

9.1.1.4 Seismic Conditions

9.1.1.4.1 Tilt. Stable within _____ arc seconds with respect to the local vertical.

9.1.1.4.2 Linear Vibration

(1) Acceleration: _____ g maximum
(2) Frequency range: _____ to _____ Hz

9.1.1.4.3 Angular Vibration

(1) Acceleration: _____ rad/s^2 maximum
(2) Frequency range: _____ to _____ Hz

9.1.2 Installation Conditions. In designing the mounting fixture, consideration shall be given to the installation conditions of the application.

Copyright The Institute of Electrical and Electronics Engineers, Inc.
Provided by IHS under license with IEEE
No reproduction or networking permitted without license from IHS

Not for Resale

Reference to a specific mounting block thermal and mechanical design, etc may be necessary if deemed important to meet performance requirements.

9.1.2.1 Thermal Conditions. All tests shall be performed with the unit at thermal equilibrium as evidenced by _____. The unit operating temperature shall be _____ ± _____ °C. Determination of the temperature shall be as specified in _____.

9.1.2.2 Mechanical Conditions. The gyro shall be mounted in such a way that the alignment of its three reference axes with respect to the test fixture is established and maintained within _____ [arc seconds, _____] under all specified test conditions.

9.1.3 Electrical Excitation and Load Conditions. Excitation and load conditions shall be as specified hereinafter.

The wheel speed and pickoff offset must be adjusted as necessary for operation at the gyro operating null prior to performance testing. An adjustment procedure may be needed as part of the test procedure.

9.1.3.1 Spin Motor

(1) Frequency: _____ ± _____ Hz
(2) Type of connection [2 phase, 3 phase, _____]
(3) Line-to-line voltage: _____ ± _____ V

A higher voltage, a different frequency, and application time may be specified for starting if required.

(4) Phase angle: _____ ± _____ °
(5) Wave characteristic shall be _____

Wave shape, harmonic distortion, etc, may be specified.

(6) Source impedance: _____ ± _____ Ω [+, -] j _____ ± _____ Ω
(7) Phase-splitting capacitor: _____ ± _____ μF

9.1.3.2 Pickoffs

(1) Frequency: _____ ± _____ Hz, [phase locked with spin motor excitation, _____]
(2) [Voltage, Current]: _____ ± _____ [V, mA]
(3) Maximum [voltage, current] waveform distortion: _____ [V, mA]
(4) Source impedance: _____ ± _____ Ω [+, -] j _____ ± _____ Ω
(5) Load impedance: _____ ± _____ Ω [+, -] j _____ ± _____ Ω

9.1.3.3 Torquers

(1) Maximum [voltage, current]: _____ [V, mA]
(2) Source Impedance: _____ ± _____ Ω [+, -] j _____ ± _____ Ω

9.1.3.4 Rotor Rotation Detector. Load impedance: _____ ± _____ Ω [+, -] j _____ ± _____ Ω

9.1.3.5 Heater

(1) Frequency: _____ ± _____ Hz
(2) Voltage: _____ ± _____ V
(3) Type of control: _____

9.1.3.6 Control Temperature Sensor

(1) Frequency: _____ ± _____ Hz
(2) [Voltage, current]: _____ ± _____ [V, mA]

9.1.3.7 Monitor Temperature Sensor

(1) Frequency: _____ ± _____ Hz
(2) [Voltage, current]: _____ ± _____ [V, mA]

9.1.3.8 Electrical Connections and Phasing. Electrical connections and phasing shall be specified on schematic diagram _____.

Trim components, grounding, shielding, test points, load requirements, etc shall be specified as needed. Internal electrical circuitry may also be specified.

9.1.4 Starting Procedure

9.1.4.1 Warm-Up Time. Unless otherwise specified, a minimum warm-up time of _____ minutes must elapse before starting the tests of Section 10.

9.1.4.2 Starting Sequence. The sequence of operations required to bring the gyro to operating condition shall be _____.

CAUTION: *Improper sequence of wheel starting and closure of the capture loops may result in damage to the gyro.*

9.1.5 Turn-Off Procedure. The sequence of operations required to turn off the gyro shall be _____.

CAUTION: *Improper sequence of wheel turn-off and opening of the capture loops may result in damage to the gyro. Handling care during wheel run-down may be specified.*

9.2 Standard Operating and Test Equipment

9.2.1 General Requirements

Copyright The Institute of Electrical and Electronics Engineers, Inc.
Provided by IHS under license with IEEE
No reproduction or networking permitted without license from IHS
Not for Resale

The accuracy and bandpass characteristics of the operating and test equipment shall be compatible with the requirements of the gyro performance specification. Provisions shall be made for adequate stabilization of the operating and test equipment. When possible, adequate limitations shall be placed on the operating and test equipment to protect the gyro from excessive inputs and loads, such as electrical, mechanical, thermal, etc.

9.2.2 Standard Operating Equipment

Standard operating equipment is the equipment used to provide standard gyro operation and shall be listed here by name, manufacturer, model, part number, or by performance requirements. The capture electronics are part of the standard operating equipment. The capture electronics will significantly influence the test results and consequently must be completely specified.

9.2.3 Test Equipment

Test equipment is the equipment used to provide a stimulus, a measurement, or a data acquisition and reduction capability; it shall be listed here by name, manufacturer, model, part number, or by performance requirements. When applicable this includes specific identification of the test software programs.

10. Test Procedures

10.1 Examination of Product (Mechanical). The gyro shall be inspected visually and dimensionally for proper identification, surface finish, and for defects in workmanship to determine that it conforms to the requirements of Section _____.

10.2 Examination of Product (Electrical). The gyro shall be inspected electrically according to the following sections to measure impedances, dielectric strengths, and insulation resistances.

For DTGs where preamplifiers or other sensitive devices are included within the gyro case, care must be taken to avoid the application of voltages that could damage those devices.

10.2.1 Impedance Test

10.2.1.1 Purpose. The purpose of this test is to measure the impedance of the pick-offs, motor, torquers, [rotor rotation detector, heater circuits, preamplifiers, _____].

10.2.1.2 Test Equipment

In addition to the standard operating equipment from 9.2.2, the following test equipment from 9.2.3 is required for this test and shall be listed in this section:

(1) Impedance bridge with frequency generator adjustable to the specified frequency
(2) DC resistance bridge or other suitable resistance measuring system

10.2.1.3 Test Setup and Procedure. The gyro shall be allowed to reach thermal equilibrium at the temperature specified in Sections _____ in order that the final value will not be affected by changing temperature.

Measure all gyro impedances specified in Section _____. The test current through the circuit shall be as small as practical considering the effect on the gyro's internal circuitry and the sensitivity of the measuring instruments. The test current shall be uninterrupted for _____ ± _____ seconds.

10.2.1.4 Test Results. The impedance quantities measured shall be recorded and shall conform to the requirements of Sections _____.

10.2.2 Dielectric Strength Test

10.2.2.1 Purpose. The purpose of this test is to ascertain that a circuit element or component part of the gyro can operate safely at its rated voltage and withstand momentary overpotentials due to switching, surges, etc, by measuring the leakage current between isolated circuits and between the gyro case and the circuits isolated from the gyro case.

10.2.2.2 Test Equipment

In addition to the standard operating equipment from 9.2.2, the following test equipment from 9.2.3 is required for this test and shall be listed in this section:

AC high-voltage source equipped with voltage and current-measuring devices

10.2.2.3 Test Setup and Procedure. Apply _____ ± _____ Vrms at _____ Hz between the insulated portion and the case ground. The test voltage shall be raised from zero to the specified value as uniformly as possible, at a rate of approximately 500 V rms per second. The test voltage shall be maintained for a period of _____ seconds. At this time, the voltage shall be gradually reduced to avoid surges. During each

Copyright The Institute of Electrical and Electronics Engineers, Inc.
Provided by IHS under license with IEEE
No reproduction or networking permitted without license from IHS

Not for Resale

test, the fault indicator shall be monitored for the leakage current.

10.2.2.4 Test Results. The results shall conform to the requirement of Section _____.

10.2.3 Insulation Resistance Test

10.2.3.1 Purpose. The purpose of this test is to measure the insulation resistance between the isolated electrical circuits and between the gyro case and the circuits isolated from the gyro case.

10.2.3.2 Test Equipment

> In addition to the standard operating equipment from 9.2.2, the following test equipment from 9.2.3 is required for this test and shall be listed in this section:
> Megohmmeter

10.2.3.3 Test Setup and Procedure. Apply _____ ± _____ V dc for a period of _____ ± _____ seconds between the indicated circuits and between the circuits and the gyro case. Record the final resistance reading.

10.2.3.4 Test Results. The results shall conform to the requirement of Section _____.

10.3 Leak Test

10.3.1 Purpose. The purpose of this test is to determine if leakage through the gyro case is occurring.

10.3.2 Test Equipment

> In addition to the standard operating equipment from 9.2.2, the following test equipment from 9.2.3 is required for this test and shall be listed in this section:
> (1) Helium leak detector or immersion fluid (specify)
> (2) Vacuum enclosure

10.3.3 Test Setup and Procedure

10.3.3.1 Method 1. The gyro shall be cleaned of all dirt and grease and placed in a vacuum enclosure at _____ ± _____ [Pa, _____] and stabilized at _____ ± _____ °C gyro temperature. External gas leakage shall then be measured using a helium gas detector.

10.3.3.2 Method 2. The gyro shall be cleaned of all dirt and grease and submerged in fluid and placed in a vacuum enclosure at _____ ± _____ [Pa, _____] and _____ ± _____ °C gyro temperature for a period of _____ minutes. The presence or absence of a continuous flow of bubbles shall be noted.

10.3.4 Test Results

10.3.4.1 Method 1. The measured gas leakage rate shall not exceed _____ cm^3/s.

10.3.4.2 Method 2. There shall be no evidence of a steady stream of bubbles after _____ minutes.

10.4 Polarity

10.4.1 Purpose. The purpose of the polarity test is to determine the gyro pickoff, torquer, and motor polarities with reference to the axes defined in Section _____.

10.4.2 Test Equipment

> In addition to the standard test equipment from 9.2.2, the following test equipment from 9.2.3 is required for these tests and shall be listed in this section:
> (1) Dividing head
> (2) Gyro torquer supply
> (3) Means of observing the pickoff output polarity and amplitude.

10.4.3 Test Setup and Procedure. Align the dividing head spindle axis to within _____ arc minutes of west. Orient the gyro on the dividing head with the Z axis vertical and the X axis parallel to the spindle axis within _____ arc minutes. Prepare the gyro in accordance with the standard test conditions of 9.1 except do not apply wheel excitation or close the capture loops.

> **CAUTION:** *Removing wheel excitation with the capture loops closed may result in damage to the gyro.*

Connect the gyro torquer supply to the X torquer and apply a [positive, negative] input of _____ mA to the torquer. Record the X pickoff phase with respect to the pickoff excitation. Connect the gyro torquer supply to the Y torquer and repeat for the Y axis.

Apply wheel excitation and connect the gyro torquer supply to the Y torquer. Apply torquer current to hold the pickoff at null within _____ mV/s. Rotate the dividing head [clockwise, counterclockwise] about the spindle axis and record the X pickoff phase with respect to the pickoff excitation. Repeat with the Y axis parallel to the spindle axis and the torquer supply connected to the X torquer.

Connect the gyro torquer supply to the X torquer and apply a [positive, negative] input of _____ mA. Record the Y pickoff phase with respect to the pickoff excitation. Connect the gyro torquer supply to the Y torquer and apply a [positive, negative] input of _____ mA. Record the X pickoff phase with respect to the pickoff excitation.

Copyright The Institute of Electrical and Electronics Engineers, Inc.
Provided by IHS under license with IEEE
No reproduction or networking permitted without license from IHS
Not for Resale

Polarities of gyro elements may be verified by applying uniform-polarity excitations with standard test equipment and observing that polarities of output signals properly correspond with rate inputs.

10.4.4 Test Results. The results obtained in 10.4.3 shall conform to the requirements of section _____.

10.5 Operating Temperature Test Series

10.5.1 Temperature Sensor Characteristics

10.5.1.1 Purpose. The purpose of this test is to determine the output magnitude of the temperature sensor and its variation with temperature.

If an internal gyro element other than the internal temperature sensor is to be used, a similar test shall be specified for that element.

10.5.1.2 Test Equipment

In addition to the standard operating equipment from 9.2.2, the following test equipment from 9.2.3 is required for this test and shall be listed in this section:

(1) Temperature control chamber
(2) Temperature sensor output measuring equipment

10.5.1.3 Test Setup and Procedure. Mount the gyro in a temperature-controlled chamber with the standard test conditions of 9.1. Stabilize the gyro temperature for _____ minutes at _____ ± _____ °C (operating temperature). Measure the temperature sensor output. Repeat these measurements at the following temperatures: _____ and _____ ± _____ °C.

For temperature-controlled gyros, one of the temperatures should be above and one below the operating temperature.

During this test, the power to the sensor shall not exceed ____ W. Record chamber temperatures and sensor output.

10.5.1.4 Test Results. The output magnitude of the sensor at the specified temperature shall be _____ ± _____ [Ω, V, _____].

From the temperature data compute the change in output magnitude per unit temperature. The result shall be _____ ± _____ [Ω/°C, V/°C, _____].

10.5.2 Operating Temperature

This test applies only to temperature-controlled gyros.

10.5.2.1 Purpose. The purpose of this test is to ensure that the gyro operating temperature is within the operating temperature range as indicated by the temperature sensor output.

10.5.2.2 Test Equipment

In addition to the standard operating equipment from 9.2.2, the following test equipment from 9.2.3 is required for this test and shall be listed in this section:

(1) Temperature-measuring equipment
(2) Temperature chambers (if required)
(3) Temperature sensor output measuring equipment

10.5.2.3 Test Setup and Procedure. Operate the gyro in accordance with the standard test conditions of 9.1. The gyro shall be allowed to reach thermal equilibrium for ____ minutes before the temperature measurement is made. Measure and record the temperature sensor output.

10.5.2.4 Test Results. The gyro operating temperature shall be within the operating temperature range specified in Section _____.

10.6 Pickoff Test Series

10.6.1 Purpose. The purpose of this test is to measure the pickoff scale factors, scale factor composite errors, electrical nulls, and phase shifts.

10.6.2 Test Equipment

In addition to the standard operating equipment from 9.2.2, the following test equipment from 9.2.3 is required for this test and shall be listed in this section:

(1) Means of measuring phase shift
(2) Means of positioning the gyro case accurately about the X and Y input axes.
(3) Means of measuring in-phase, quadrature, and total pick-off output
(4) Single-axis rate table
(5) Gyro torquer supply
(6) Wave analyzer

10.6.3 Test Setup and Procedure

10.6.3.1 Scale Factor and Scale Factor Composite Error. Mount the gyro in the fixture on the single-axis rate table with the Z axis nominally parallel to the table axis. Connect the gyro to the pickoff output measuring equipment. Operate the gyro open-loop in accordance with the standard test conditions of 9.1. Rotate the test table at a

Copyright The Institute of Electrical and Electronics Engineers, Inc.
Provided by IHS under license with IEEE
No reproduction or networking permitted without license from IHS

Not for Resale

nominal rate of _____ °/s with the input vector in the same direction as the Z axis. Record the pickoff output. Stop the table rotation. Reorient the gyro about the X input axis _____ ± _____ ° and repeat the above procedure. Repeat at _____ ° steps to + _____ ° and - _____ °.

Repeat the procedure for gyro orientations about the Y input axis.

With the spin motor running, rotation about an axis parallel to the Z axis within small angles up to the limit stops will cause the spin axis to align itself with the input vector as accurately as gyro geometry and restraints will allow. The rate table angular velocity should be high enough that a further increase in rate causes no appreciable change in gyro pickoff output.

An accurate knowledge of pickoff scale factor may not be necessary for closed-loop operation of the gyro. When the motor is not operating a simple check of the pickoff scale factor can be made using the torquers to rotate the gyro rotor to the limit stops and measuring the pickoff outputs. This method is limited by the accuracy to which the mechanical location of the limit stops is known.

10.6.3.2 Phase Shift, Quadrature, and Electrical Null. Mount the gyro in a fixture. Connect the gyro to the phase-measuring equipment. Operate the gyro open-loop in accordance with the standard test conditions of 9.1. Using either gyro torquer, rotate the rotor in the _____ direction until an output of _____ ± _____ V rms is obtained. Measure the phase shift between the pickoff output and the pickoff excitation. Repeat with the rotor rotated in the opposite direction from null.

Using the torquer, rotate the gyro rotor until the pickoff output at the previously measured phase angle is a minimum. Record this voltage as the in-phase null, a voltage 90° out-of-phase with this voltage as the quadrature voltage, and the total voltage.

Repeat the procedure using the other torquer.

The output voltage chosen for the phase-shift measurement should be large enough to make the errors due to quadrature insignificant. This test may be performed in a closed loop using offset signals in the rebalance loop to produce the desired outputs.

10.6.3.3 Offset. Mount the gyro in the fixture with the case Z axis vertical and the X axis west to within _____ arc minutes. Operate the gyro in a closed loop in accordance with the standard test conditions of 9.1. With the gyro operating at tuned speed (see 10.12.4) and the X and Y pickoffs at null, measure and record the Y torquer current. Change the spin frequency by + _____ Hz and adjust the X pickoff offset until the original torquer current is achieved. Repeat both measurements until the torquer current change is less than _____ mA.

Reorient the gyro test fixture so that the case Z axis is vertical and the Y axis is west to within _____ arc minutes. Repeat the above test for the Y axis.

Record the final pickoff offset voltages and polarities.

Due to cross-coupling effects, the adjustments may have to be repeated for both axes.

10.6.3.4 One-N (1N) Modulation. Mount the gyro in the fixture. Operate the gyro in a closed loop in accordance with the standard test conditions of 9.1. Using a wave analyzer, measure the demodulated pickoff output at the rotor spin frequency.

10.6.4 Test Results

10.6.4.1 Scale Factor. Obtain the slope of the best straight line that can be fitted by a method, such as the method of least squares, to the input-output data obtained in 10.6.3.1. Pickoff scale factors as computed above shall conform to the requirements of Section _____.

10.6.4.2 Scale Factor Composite Error. Pickoff scale factor composite error stated as a percent of the maximum specified pickoff output is the maximum deviation of the input-output data obtained in 10.6.3.1 from the nominal pickoff scale factor requirement. The pickoff scale factor composite errors shall conform to the requirements of Section _____.

10.6.4.3 Electrical Null. The voltages measured in 10.6.3.2 shall conform to the requirements of Section _____.

10.6.4.4 Phase Shift. The phase shifts measured in 10.6.3.2 shall conform to the requirements of Section _____.

10.6.4.5 Offset. Divide the pickoff offset voltage for each axis, measured in 10.6.3.3, by the respective pickoff scale factor determined in Section _____ to obtain the pickoff offsets. The results shall conform to the requirements of Section _____.

Copyright The Institute of Electrical and Electronics Engineers, Inc.
Provided by IHS under license with IEEE
No reproduction or networking permitted without license from IHS
Not for Resale

10.6.4.6 One-N (1N) Modulation. The 1N modulation measured in 10.6.3.4 shall conform to the requirements of Section _____.

10.7 Torquer Test Series

10.7.1 Purpose. The purpose of this test series is to measure gyro command rate scale factor, command rate scale factor errors, command rate scale factor sensitivities, maximum command rate, continuous command rate, rate hysteresis error and torquer time constant.

10.7.2 Test Equipment

In addition to the standard operating equipment from 9.2.2, the following test equipment from 9.2.3 is required for this test and shall be listed in this section:

(1) Single-axis rate table
(2) Single-axis dividing head
(3) Means of measuring gyro torquer current or pulse rate
(4) Timing device
(5) Means of measuring gyro temperature
(6) Rate table mountable means of generating magnetic fields
(7) Rate table mountable temperature environmental chamber
(8) Means of measuring impedance

10.7.3 Test Setup and Procedure

10.7.3.1 Command Rate Scale Factor

10.7.3.1.1 High-Input Rate Test. Align the rate table rotational axis to within _____ arc seconds of vertical. Mount the gyro in the fixture on the rate table so that the X axis is parallel to the table rotational axis within _____ arc seconds. Connect the gyro to the capture electronics and measuring equipment. Operate the gyro in accordance with the standard test conditions of 9.1. Apply an input rate of _____ °/s [through an angle of _____ degrees, for a duration of __ s] in a [cw,ccw] direction. Record torquer [current, pulse rate] at a sample interval of _____[″,°,rev], input rate (°/s), and [cw,ccw] rotation. Repeat this test for rates of _____ °/s and [cw,ccw] rotation.

Repeat the procedure with the Y axis parallel to the table rotation axis.

Operating the gyro at high rates may induce time dependent, thermally related scale factor errors. It may be desirable to specify the loop closure time and the time interval from the application of the input rate to the taking of readings. The sequence of tests may be selected to identify effects such as hysteresis and thermal sensitivity. During the test it may be desirable to monitor the gyro pickoff output.

10.7.3.1.2 Low-Input Rate Test

For some applications it may be required to establish the performance of the gyro in the low-input rate region.

Align the dividing head spindle axis to within _____ arc seconds of vertical. Mount the gyro in the fixture on the dividing head so that the X axis is perpendicular to the spindle axis within _____ arc seconds. Connect the gyro to the gyro capture electronics and measuring equipment. Operate the gyro in accordance with the standard test conditions of 9.1. Rotate the dividing head to orient the gyro X axis south within _____ arc minutes. Record the dividing head angle and the gyro torquer [current, pulse rate]. Rotate the dividing head through 360° in _____ steps of _____ ± _____ °. At each step, record the dividing head angle and the corresponding torquer [current, pulse rate].

Repeat the procedure with the Y axis perpendicular to the spindle axis.

10.7.3.2 Command Rate Scale Factor Errors

10.7.3.2.1 Linearity Error. To be determined from the procedures of 10.7.3.1.1.

10.7.3.2.2 Asymmetry. To be determined from the procedures of 10.7.3.1.1.

10.7.3.2.3 Repeatability. Repeat the procedure [see 10.7.3.1.1 and 10.7.3.1.2] _____ times.

10.7.3.2.4 Stability. Repeat the procedures of 10.7.3.1 _____ times per day for _____ [min, h, d] of continuous operation. Measurements shall be made at least _____ [min, h] apart.

10.7.3.3 Command Rate Scale Factor Sensitivities. The purpose of the sensitivity tests is to determine the changes in command rate scale factor caused by variations in the thermal environment.

10.7.3.3.1 Temperature. Enclose the gyro in a temperature-controlled chamber. Stabilize the gyro at _____ ± _____ °C for _____ [min, h]. Repeat selected procedures of [10.7.3.1.1, 10.7.3.1.2]. Record the gyro temperature in addition to the data listed in [10.7.3.1.1, 10.7.3.1.2]. Repeat the test at _____ °C.

10.7.3.4 Maximum Command Rate. Align the rate table rotational axis to within _____ arc minutes of vertical. Mount the gyro in the fixture on the rate table so that the X axis is parallel to the table rotational axis within _____ arc minutes. Operate the gyro in the rate-sensing mode (see 8.2) in accordance with the standard

Copyright The Institute of Electrical and Electronics Engineers, Inc.
Provided by IHS under license with IEEE
No reproduction or networking permitted without license from IHS

Not for Resale

test conditions of 9.1. Apply an input rate of _____ ± _____ °/s for no longer than _____ seconds. Within _____ minutes after removal of maximum command rate, complete a repetition of the test in 10.7.3.1.1 or 10.7.3.1.2.

Repeat the procedure with the Y axis parallel to the table rotational axis.

> This test may also be performed by operating the gyro in a servo table loop, by applying an external signal to the torquer equivalent to the specified command rate, and by measuring the table rate.

10.7.3.5 Continuous Command Rate. Align the rate table rotational axis to within _____ arc minutes of vertical. Mount the gyro in the fixture on the rate table so that the X axis is parallel to the table rotational axis within _____ arc minutes. Operate the gyro in the rate-sensing mode (see 8.2) in accordance with the standard test conditions of 9.1 Apply an input rate of _____ ± _____ °/s for at least _____ minutes. Within _____ minutes after removal of the continuous command rate, complete a repetition of the test of 10.7.3.1.1 or 10.7.3.1.2.

Repeat the procedure with the Y axis parallel to the table rotational axis.

> This test may also be performed by operating the gyro in a servo table loop, by applying an external signal to the torquer equivalent to the specified command rate, and by measuring the table rate.

10.7.3.6 Torquer Time Constant. Connect the impedance measuring equipment to the X torquer. Record the inductance and resistance at frequency and voltage settings of _____ ± _____ Hz and _____ ± _____ V.

Repeat the procedure for the Y torquer.

> For successful impedance matching with capture electronics, the second-order characteristics of the torquer may need to be considered.

10.7.4 Test Results

10.7.4.1 Command Rate Scale Factors, K_{TOX} and K_{TOY}.

> The recommended analysis for 10.7.3.1.1, High-Input Rate Test, is a linear least squares fit; for 10.7.3.1.2, Low-Input Rate Test, a Fourier fit that includes only the constant and fundamental terms, is recommended.

10.7.4.1.1 High-Input Rate Test. The slope of the best straight line that can be fitted to the input-output data obtained in 10.7.3.1.1 is the command rate scale factor K_{TOX} and K_{TOY} respectively and shall conform to the requirements of Section _____.

10.7.4.1.2 Low-Input Rate Test. Determine the amplitude of the fundamental by fitting the input-output data for the X and Y axes of 10.7.3.1.2 using a Fourier analysis. Using this amplitude, compute the command rate scale factor K_{TOX}, K_{TOY}.

$$\text{command rate scale factor} = \frac{\text{horizontal component of earth's rate [°/s, °/h]}}{\text{amplitude of fundamental [mA]}}$$

The command rate scale factors as computed above shall conform to the requirements of Section _____.

10.7.4.2 Command Rate Scale Factor Errors

10.7.4.2.1 Linearity Error. The absolute value of the maximum deviation from the least-squares straight line that can be generated from the input-output data for the X and Y axes obtained in 10.7.3.1.1 is the command rate scale factor linearity error and shall conform to the requirements of Section _____.

10.7.4.2.2 Asymmetry, K_{TA}. The difference between the command rate scale factor measured with a positive and a negative command rate for the X and Y axes obtained in 10.7.3.1.1 shall conform to the requirements of Section _____.

10.7.4.2.3 Repeatability. The variation in the command rate scale factor for the X and Y axes of the repetitive test series of 10.7.3.2.3 shall conform to the requirements of Section _____.

10.7.4.2.4 Stability. The results obtained in 10.7.3.2.4 shall conform to the requirements of Section _____.

10.7.4.3 Command Rate Scale Factor Sensitivities

10.7.4.3.1 Temperature. The change in command rate scale factor obtained from 10.7.4.1.1 divided by the change in temperature shall conform to the requirements of Section _____.

10.7.4.4 Maximum Command Rate. Command rate scale factor for the X and Y axes shall conform to the requirements of Section _____, following exposure to the specified maximum command rate.

10.7.4.5 Continuous Command Rate. Command rate scale factor for the X and Y axes shall conform to the requirements of Section _____,

Copyright The Institute of Electrical and Electronics Engineers, Inc.
Provided by IHS under license with IEEE
No reproduction or networking permitted without license from IHS
Not for Resale

following exposure to the specified continuous command rate.

10.7.4.6 Torquer Time Constant. Using the data obtained in 10.7.3.6, compute the torquer time constant as follows:

$$\text{torquer time constant} = \frac{L}{R} \text{ seconds}$$

where

L = torquer inductance, henrys
R = torquer resistance, ohms

The results shall conform to the requirements of Section _____.

10.8 Rotor Rotation Detector

10.8.1 Purpose. The purpose of this test is to measure the output of the rotor rotation detector.

10.8.2 Test Equipment

In addition to the standard operating equipment from 9.2.2, the following test equipment from 9.2.3 is required for this test and shall be listed in this section:
(1) Means of measuring the frequency
(2) Means of measuring the waveform characteristics

10.8.3 Test Setup and Procedure

10.8.3.1 Pulse Output Type. Connect the rotor rotation detector to the output measuring equipment and operate the gyro in accordance with the standard test conditions of 9.1. Measure the zero-to-peak voltage of the smallest and largest peaks. Measure the pulse width at _____ V of the narrowest and the widest pulses. Measure the repetition rate. Measure the [rise, fall] time.

10.8.3.2 Near Sinusoidal Output Type. Connect the rotor rotation detector to the output measuring equipment and operate the gyro in accordance with the standard test conditions of 9.1. Measure the rms voltage of the total output and the frequency and amplitude of the fundamental signal.

10.8.4 Test Results. The results obtained in 10.8.3.1, and 10.8.3.2 shall conform to the requirements of Section _____.

10.9 Spin Motor Test Series

10.9.1 Purpose. The purpose of this test series is to measure the spin motor run-up time, run-down time, the starting power, the running power, and the starting and running current.

10.9.2 Test Equipment

In addition to the standard operating equipment from 9.2.2, the following test equipment from 9.2.3 is required for this test and shall be listed in this section:
(1) Means of measuring elapsed time
(2) Means of measuring rotor speed
(3) Means of measuring power
(4) Means of measuring current

10.9.3 Test Setup and Procedure

10.9.3.1 Run-Up Time. Prepare the gyro for test in accordance with the standard test conditions of 9.1, except do not apply wheel excitation. Excite the spin motor and simultaneously start the timer. When the rotor reaches _____ percent of tuned speed, stop the timer and record the elapsed time.

10.9.3.2 Run-Down Time. Operate the gyro in accordance with the standard test conditions of 9.1. Remove the spin motor excitation. Start the timer when the rotor reaches _____ percent of tuned speed. When the rotor reaches _____ percent of tuned speed, stop the timer and record the elapsed time.

If the run-down time is measured under other than open-circuit conditions, load conditions should be defined.

10.9.3.3 Power Consumption (Starting Power, Running Power, Starting and Running Current). Connect the power and current-measuring devices in the circuit between the spin motor power supply and the spin motor. Prepare the gyro for test in accordance with the standard test conditions of 9.1, except do not apply wheel excitation. Apply power to the spin motor; measure and record the starting current and power. Allow the rotor to reach operational speed; measure and record the running power and current.

10.9.4 Test Results

10.9.4.1 Run-Up Time. The results of 10.9.3.1 shall conform to the requirements of Section _____.

10.9.4.2 Run-Down Time. The results of 10.9.3.2 shall conform to the requirements of Section _____.

10.9.4.3 Power Consumption (Starting and Running Power, Starting and Running Current). The results of 10.9.3.3 shall conform to the requirements of Section _____.

10.10 Axis Alignment

10.10.1 Torquer Axis Alignment

Copyright The Institute of Electrical and Electronics Engineers, Inc.
Provided by IHS under license with IEEE
No reproduction or networking permitted without license from IHS

Not for Resale

10.10.1.1 Purpose. The purpose of this test is to measure the misalignment angle, α, between case axis X and torquer axis X_T and the misalignment angle, β, between case axis Y and torquer axis Y_T and the perpendicularity of torquer axis X_T to torquer axis Y_T.

10.10.1.2 Test Equipment

In addition to the standard operating equipment from 9.2.2, the following test equipment from 9.2.3 is required for this test and shall be listed in this section:

(1) Gyro holding fixture
(2) Single axis dividing head
(3) Single axis rate table
(4) Means of recording gyro torquer currents

10.10.1.3 Test Setup and Procedure

10.10.1.3.1 Method 1. Align the spindle axis of the dividing head within _____ arc minutes of vertical. Mount the gyro in the fixture on the dividing head so that the Z axis is vertical within _____ arc minutes. Connect the gyro to the capture electronics and measuring equipment. Rotate the dividing head so that X case axis is north within _____ arc seconds (position 1). Record settled values of both X and Y torquer currents, i_X and i_Y. Repeat for X case axis east (position 2), south (position 3), and west (position 4).

The axis alignment test of method 1 may be performed as part of the multiposition drift test, see 10.14.

10.10.1.3.2 Method 2. Align the rate table rotational axis within _____ arc minutes of vertical. Mount the gyro in the fixture on the rate table so that the X case axis is perpendicular to the table rotational axis within _____ arc seconds and with the Z axis in the horizontal plane and Y case axis up. Operate the gyro in the rate-sensing mode in accordance with the standard test conditions of 9.1. Connect the gyro to the torquer current measuring equipment. Apply a table input of _____ ± _____ °/s for _____ integral revolutions of the rate table. Record the average Y torquer current i_Y. Reverse the table rotation and repeat the above test. Rotate the gyro and fixture 90° ± _____ arc seconds about the gyro Z axis and with X case axis up. Repeat the above test for both directions of table rotation and record the average X torquer current i_X.

To eliminate test fixture errors it may be desirable to rotate the gyro 180° about the Z axis with respect to the fixture and repeat the tests for both directions of the table rotation.

10.10.1.4 Test Results

10.10.1.4.1 Method 1. Compute the misalignment angle β as

$$\beta = \frac{i_{X_1} - i_{X_3}}{i_{X_2} - i_{X_4}} \cdot 10^3 \text{ milliradians}$$

where i_X is the X torquer current at positions 1, 2, 3, and 4 as designated by the subscripts.

Similarly, compute the misalignment angle α as

$$\alpha = \frac{i_{Y_4} - i_{Y_2}}{i_{Y_3} - i_{Y_1}} \cdot 10^3 \text{ milliradians}$$

where i_Y is the Y torquer current at positions 1, 2, 3, and 4 as designated by the subscripts. Misalignment angles α, β and the algebraic difference of α and β (the perpendicularity of X_T to Y_T) shall conform to the requirements of Section _____.

10.10.1.4.2 Method 2. Using the command rate scale factors K_{TOX} and K_{TOY} determined in Section _____ compute the misalignment angle α as:

$$\alpha = \frac{[i_Y(\text{cw}) - i_Y(\text{ccw})] \cdot K_{TOY}}{2 \cdot \text{table rate}} \text{ rad}$$

where i_Y(cw) and i_Y(ccw) are the average torquer currents for the clockwise and counterclockwise rate table rotations.

Similarly, compute the misalignment angle β as:

$$\beta = \frac{[i_X(\text{cw}) - i_X(\text{ccw})] \cdot K_{TOX}}{2 \cdot \text{table rate}} \text{ rad}$$

Misalignment angles α, β and the algebraic difference of α and β (the perpendicularity of X_T to Y_T) shall conform to the requirements of Section _____.

The table rates must be expressed in units which are consistent with the units of K_{TOX} and K_{TOY}.

10.10.2 Rotor Spin Axis Alignment

10.10.2.1 Purpose. The purpose of this test is to measure the misalignment angle, γ, between the rotor spin axis and case axis Z.

10.10.2.2 Test Equipment

In addition to the standard operating equipment from 9.2.2, the following test equipment from 9.2.3 is required for this test and shall be listed in this section:

(1) Gyro holding fixture
(2) Single-axis rate table
(3) Means of recording gyro torquer currents

Copyright The Institute of Electrical and Electronics Engineers, Inc.
Provided by IHS under license with IEEE
No reproduction or networking permitted without license from IHS
Not for Resale

10.10.2.3 Test Setup and Procedure. Align the table axis within _____ arc minutes of vertical. Mount the gyro in the fixture on the table so that Z axis is parallel to the table axis within _____ arc seconds. Connect the gyro to the capture electronics and measuring equipment. Rotate the table at _____ ± _____ °/h and record settled values of both X and Y torquer currents, i_X and i_Y.

10.10.2.4 Test Results. Using the command rate scale factors K_{TOX} and K_{TOY} determined in Section _____ and the approximation that sin $\gamma = \gamma$, compute the two misalignment angles γ_X and γ_Y as:

$$\gamma_X = \frac{K_{TOX}\, i_X}{\text{table rate}} \cdot 10^3 \text{ milliradians}$$

$$\gamma_Y = \frac{K_{TOY}\, i_Y}{\text{table rate}} \cdot 10^3 \text{ milliradians}$$

The total misalignment angle is given by:

$$\gamma = \sqrt{\gamma_X^2 + \gamma_Y^2} \text{ milliradians}$$

The results shall conform to the requirements of Section _____.

10.11 Limit Stop

10.11.1 Purpose. The purpose of this test is to determine the limit stop angle.

10.11.2 Test Equipment

In addition to the standard test equipment from 9.2.2, the following test equipment from 9.2.3 is required for this test and shall be listed in this section:

(1) Single axis dividing head
(2) Gyro torquer current supplies
(3) Means of measuring the pickoff in-phase output

10.11.3 Test Setup and Procedure

10.11.3.1 Method 1 (Input Angle). Align the dividing head spindle axis horizontal east-west to within _____ arc minutes. Install the gyro on the dividing head so that the [X, Y] case axis is parallel to the spindle axis within _____ arc minutes and the Z axis is vertical within _____ arc minutes. Operate the gyro in accordance with the standard test conditions of 9.1. Record the dividing head reference angle. Open the gyro capture loops and adjust the X and Y torquer currents to hold the pickoff outputs at in-phase null within _____ mV/s. Smoothly rotate the gyro clockwise about the [X, Y] axis until the limit stop is reached, at which point the pickoff indicates rotor nutation. Record the final dividing head angle.

This test method is not applicable for gyros with a very short time constant.

10.11.3.2 Method 2 (Input Torque). Operate the gyro in accordance with the standard test conditions of 9.1. Open the gyro capture loops and adjust the X and Y torquer currents to hold the pickoff in-phase outputs nulled to within _____ mV/s. Slowly change the [X, Y] torquer current until the [Y, X] pickoff output indicates rotor nutation. Record the maximum [Y, X] pickoff output obtained just before nutation begins to take place.

10.11.4 Test Results

10.11.4.1 Method 1 (Input Angle). Calculate the difference between the dividing head reference angle and the final dividing head angle. This result shall conform to the requirements of Section _____.

10.11.4.2 Method 2 (Input Torque). Calculate the limit stop as follows:

$$\text{limit stop} = \frac{\text{maximum pickoff output}}{\text{pickoff scale factor}}$$

The pickoff scale factor shall be that determined in Section _____. The results shall conform to the requirements of Section _____.

10.12 Tuned Speed

10.12.1 Purpose. The purpose of this test is to measure the tuned speed of the gyro.

10.12.2 Test Equipment

In addition to the standard operating equipment from 9.2.2, the following test equipment from 9.2.3 is required for this test and shall be listed in this section:

(1) Means of measuring gyro torquer currents
(2) Means of electrically offsetting the pickoff outputs
(3) Variable frequency supply

10.12.3 Test Setup and Procedure. Align the dividing head spindle axis to within _____ arc minutes of vertical. Mount the gyro in the fixture on a stable surface, so that the Z axis is vertical within _____ degrees and the Y axis [east, west] within _____ arc minutes. Connect the gyro to the capture electronics and measuring equipment. Operate the gyro in accordance with the standard test conditions of 9.1. Measure the Y torquer current.

Apply an electrical pickoff offset voltage to the X pickoff equivalent to ___ arc seconds. This will

Copyright The Institute of Electrical and Electronics Engineers, Inc.
Provided by IHS under license with IEEE
No reproduction or networking permitted without license from IHS

Not for Resale

drive the Y torquer current readout off from the previously measured value.

Adjust the spin frequency until the Y torquer current is within ± ____ mA of the original recording. Record the frequency.

10.12.4 Test Results. The tuned speed is the mechanical rotor speed corresponding to the electrical spin frequency identified in 10.12.3. The results shall conform to the requirements of Section ____.

10.13 Dynamic Time Constant

10.13.1 Purpose. The purpose of this test is to measure the dynamic time constant of the gyro.

10.13.2 Test Equipment

In addition to the standard operating equipment from 9.2.2, the following test equipment from 9.2.3 is required for this test and shall be listed in this section:

(1) Means of measuring gyro torquer current
(2) DC current sources
(3) Means of recording gyro pickoff outputs
(4) Means of varying and measuring spin motor excitation frequency
(5) Means of electrically offsetting the pickoff outputs

10.13.3 Test Setup and Procedure

10.13.3.1 Method 1 (Open Loop). Mount the gyro in the fixture on a stable surface so that the Z axis is vertical within _____ degrees. Connect the gyro to the capture electronics and test equipment. Operate the gyro in accordance with the standard test conditions of 9.1.

Adjust the spin frequency until the rotor speed is _____ ± _____ Hz above the tuned speed. Adjust the dc current sources until the gyro torquer current readouts are nulled to within ± _____ mA. Without removing the currents applied from the dc current sources, place the gyro in the open-loop mode of operation.

Momentarily apply _____ mA of additional current via one of the dc current supplies. After the additional current is removed, an exponentially decaying oscillation will be evident at the recording of the open-loop pickoff signals. Continue the recording until the oscillation has fully decayed.

10.13.3.2 Method 2 (Closed Loop). Mount the gyro in the fixture on a stable surface so that the Z axis is vertical within _____ degrees and the X axis is north within _____ degrees. Connect the gyro to the capture electronics and test equipment. Operate the gyro in accordance with the standard test conditions of 9.1. Adjust the spin frequency until the rotor speed is _____ ± _____ Hz above the tuned speed. Adjust the X pickoff offset control to null and measure and record the X and Y torquer currents. Adjust the X pickoff offset control to provide an X pickoff voltage of _____ ± _____ V rms. Measure and record the new X and Y torquer currents.

10.13.4 Test Results

10.13.4.1 Method 1. The time constant of the exponential forming the envelope of the oscillation is the dynamic time constant of the gyro. The results shall conform to the requirements of Section _____.

10.13.4.2 Method 2. Calculate the change in torquer current resulting from the change in pickoff offset and calculate the time constant as follows:

$$\text{time constant} = \frac{\Delta i_X \cdot K_{TOX} \cdot FOM}{2\pi \cdot \Delta i_Y \cdot K_{TOY} \cdot \Delta f} \text{ seconds}$$

where

Δi_X = change in X torquer current, mA
Δi_Y = change in Y torquer current, mA
K_{TOX} = X axis command rate scale factor, (°/h)/mA
K_{TOY} = Y axis command rate scale factor, (°/h)/mA
FOM = figure of merit, dimensionless
Δf = change in spin speed, Hz

The results shall conform to the requirements of Section _____.

10.14 Drift Rate Test Series

10.14.1 Purpose. The purpose of this test series is to measure the gyro acceleration-insensitive drift rate magnitude and repeatability, acceleration-sensitive, and acceleration-squared-sensitive drift rate coefficient magnitudes and repeatabilities, random drift rate, gyro anisoinertia drift rate, cross coupling drift rate, synchronous vibration sensitivity, torquer current rectification drift rate and hysteresis error.

10.14.2 Test Equipment

In addition to the standard operating equipment from 9.2.2, the following test equipment from 9.2.3, is required for these tests and shall be listed in this section:

(1) Dividing head or precision cube and surface plate
(2) Means of measuring gyro torquer currents
(3) Means of recording gyro torquer currents
(4) Means of measuring gyro pickoff outputs

Copyright The Institute of Electrical and Electronics Engineers, Inc.
Provided by IHS under license with IEEE
No reproduction or networking permitted without license from IHS
Not for Resale

(5) Single-axis linear vibration table (preferably a slip-table for optimum linear motion)
(6) Rotary vibrator
(7) Means for synchronously locking and phase-shifting the frequencies of the vibrator to the gyro spin motor
(8) Single-axis rate table

10.14.3 Test Setup and Procedure

10.14.3.1 Acceleration-Insensitive Drift Rate and Acceleration-Sensitive Drift Rate Coefficients

10.14.3.1.1 Magnitude. Install the gyro in the test fixture and orient the Z axis within _____ arc seconds of vertical with the Y axis pointing west within _____ arc seconds. Operate the gyro in accordance with the standard test conditions of 9.1. Connect the gyro to the torquer currents recording equipment. With the Y axis pointing west, record the torquer currents. Rotate the gyro about the Z axis through 360° in increments of 90°. At each position allow the torquer currents to stabilize for _____ minutes and record the torquer currents. Reorient the gyro by rotating it carefully about the Y axis until the gyro Z axis is horizontal north within _____ arc seconds. Rotate the gyro about the Z axis through 360° in increments of 90°. At each position allow the torquer currents to stabilize for _____ minutes and record the torquer currents.

Care must be taken to minimize the effects of errors due to misalignments with respect to the earth polar axis and the gravity vectors. The object of this test is to obtain an estimate of the coefficients of the assumed performance model of the DTG by placing the DTG axes in various orientations relative to the earth rate and gravity vectors and measuring the torque required to balance the gyro in each of the orientations. This measurement is usually in the form of a voltage across a current-sampling resistor in the capture loop of each gyro axis or the output of the corresponding voltage-to-frequency converter. This output is sampled by the data acquisition system. The electronic test instrumentation is shown in Fig 6.

10.14.3.1.2 Repeatability. Repeat the procedure of 10.14.3.1.1 _____ times, subjecting the gyro to the conditions of 3.3.14.2 and 3.3.15.2.

10.14.3.1.3 Temperature Sensitivity. Repeat the procedure of 10.14.3.1.1 at _____ ± _____ °C above and below the operating temperature.

10.14.3.1.4 Stability. Repeat the procedure of 10.14.3.1.1 _____ times.

10.14.3.2 Acceleration-Squared-Sensitive Drift Rate Coefficients. Mount the gyro in the fixture to establish the orientation of the gyro axes with respect to the applied vibration as indicated by position 1 in Fig 7. Operate the gyro in the rate-sensing mode (see 8.2) in accordance with the test conditions of 9.1. Connect the gyro to the torquer current recording equipment.

Determine the average torquer currents in this position with no applied vibration. Apply a vibration of _____ g peak of _____ Hz as measured at the gyro and determine the difference between the average torquer currents with and without vibration. Repeat the procedure at the following frequencies: _____ Hz.

Reorient the gyro to position 2 of Fig 7.

Repeat the procedure described in the paragraph above.

Care must be exercised to protect the gyro from extraneous rate inputs. Induced drifts caused by the ambient static and electromagnetic fields produced by the vibration exciter must be considered. Vibration of more than one level may be required to determine the acceleration-squared coefficients.

10.14.3.3 Anisoinertia Drift Rate Coefficient

Theoretically this drift rate coefficient may be calculated using the following formula: (J - I)/H, see 6.3. However, there may be some applications where the actual effect of multiple-axis oscillations or rotations is desired. The resulting apparent anisoinertia drift rate coefficient can only be measured if the inputs are well-defined, accurate, and well below the gyro motor hunting frequency. This usually requires input frequencies below 1 Hz and long data averaging times. The measured value may not equal the calculated value.

10.14.3.3.1 Purpose. The purpose of this test is to measure the anisoinertia drift rate coefficient of the gyro.

10.14.3.3.2 Test Equipment

In addition to the standard operating equipment from 9.2.2, the following test equipment from 9.2.3 is required for this test and shall be listed in this section.

(1) Means of measuring gyro torquer currents
(2) Means of oscillating the gyro about an axis 45° from the case Z axis.

Copyright The Institute of Electrical and Electronics Engineers, Inc.
Provided by IHS under license with IEEE
No reproduction or networking permitted without license from IHS

Not for Resale

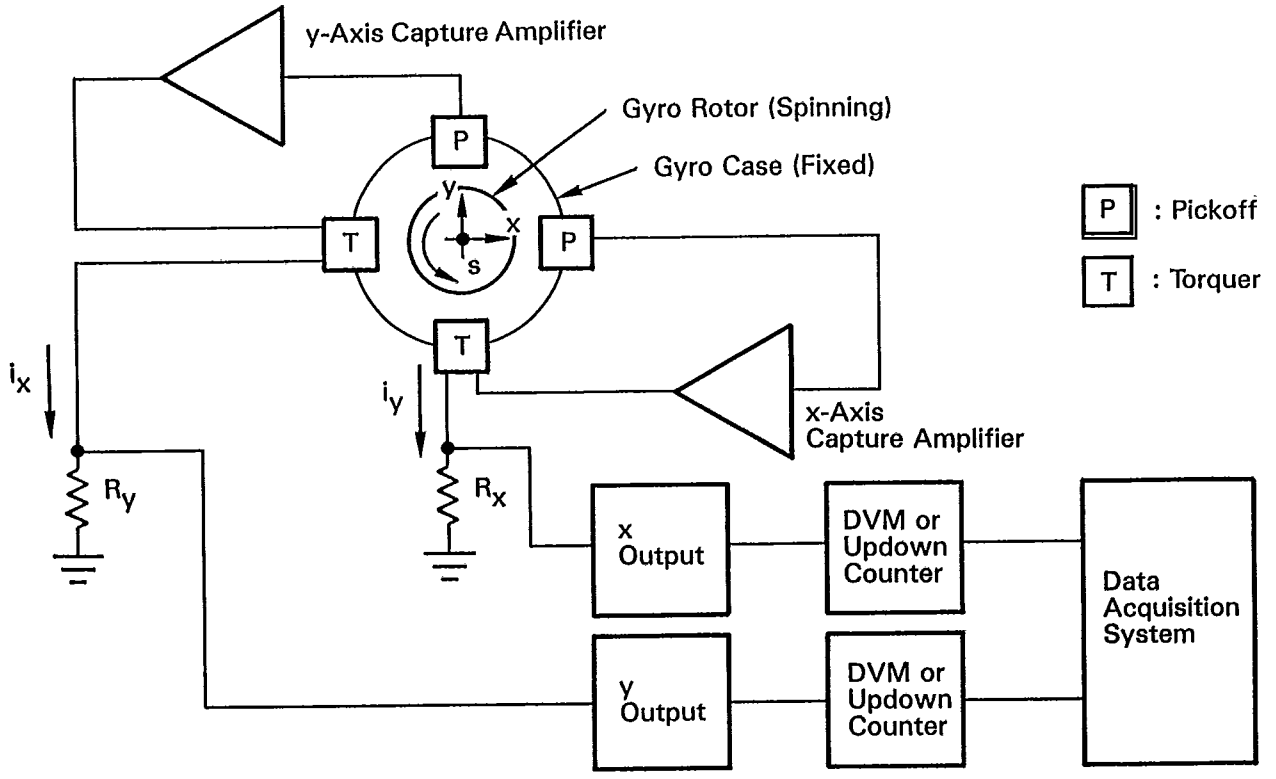

Fig 6
DTG Electronic Instrumentation

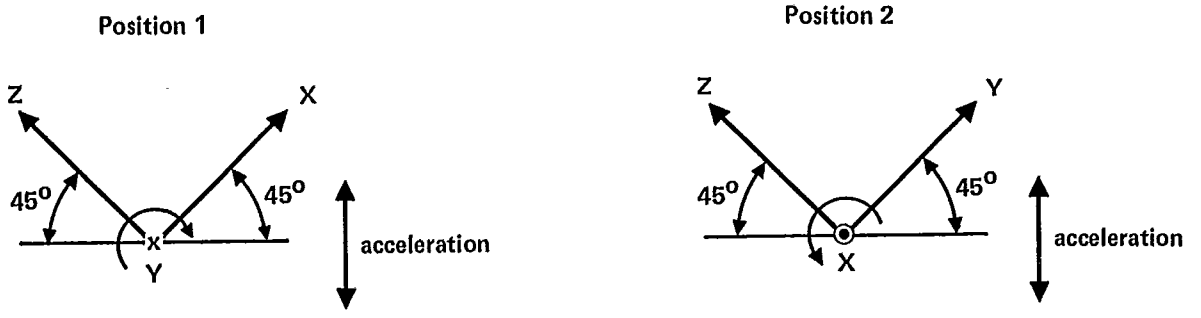

Note: Axis orientations are perpendicular or at 45° to the acceleration vector within ± _____°.

Fig 7
Vibration Drift Test Orientations

Copyright The Institute of Electrical and Electronics Engineers, Inc.
Provided by IHS under license with IEEE
No reproduction or networking permitted without license from IHS
Not for Resale

10.14.3.3.3 Test Setup and Procedure. Align the rate table axis to within _____ arc minutes of vertical. Mount the gyro in the fixture so that the X axis is horizontal and perpendicular to the oscillating table axis and with the Y and Z axes at 45° ± _____′ to the vertical. Connect the gyro to the capture electronics and the test equipment. Operate the gyro in accordance with the standard test conditions of 9.1. Measure and record the Y torquer current i_{Y_1}. Adjust the rate table oscillation peak amplitude (θ_I) to _____ [°, rad] at a frequency (f) of _____ ± _____ Hz. Again measure and record the Y torquer current i_{Y_2}.

10.14.3.4 Cross-Coupling Drift Rate, Oscillatory

Cross-coupling drift rate occurs when the gyro is oscillated about both the input and spin axis simultaneously and the frequency of the oscillation is above the motor hunting frequency.

The drift rate can be affected by the rotor angular null-hangoff error. Theoretically, this component is simply the product of rotor angular null-hangoff angle and angular rate about the Z axis. However, this component is very small and results mostly in a second-order effect.

The following considerations should be made in conjunction with specifying this coefficient:

(1) The restoring torque will be a function of both gain and phase of the capture loops.
(2) The input rates must be well defined, accurate and well above the gyro motor hunting frequency.
(3) The coefficient is frequency dependent.

Therefore the conditions under which this coefficient is measured must be carefully defined.

10.14.3.4.1 Purpose. The purpose of this test is to measure the oscillatory cross-coupling drift rate of the gyro.

10.14.3.4.2 Test Equipment

In addition to the standard operating equipment from 9.2.2 the following test equipment from 9.2.3 is required for this test and shall be listed in this section.

(1) Means of measuring gyro torquer currents, which includes a readout quantizer or counter.
(2) Means of providing oscillatory angular rates about an axis 45° from the case Z axis.

10.14.3.4.3 Test Setup and Procedure. Align the rate table axis to within _____ arc minutes of vertical. Mount the gyro in the fixture on the rate table such that the X axis is perpendicular to the table axis and the Y and Z axes are each at 45° ± _____ arc minutes to the table axis. Operate the gyro in accordance with the standard test conditions of 9.1.

Connect the readout quantizer to the gyro Y torquer current. While measuring the quantizer output with a counter, gate the counter to accumulate pulses over a selected gating interval of _____ seconds, T_1. With the rate table locked, accumulate pulses over this interval. Designate the accumulated counts as C_{Y_1}.

Begin a second accumulation of pulses. After _____ seconds, T_2, unlock the table and oscillate it at a frequency of _____ ± _____ Hz and a peak amplitude of _____ ± _____ [°, rad]. Continue to operate the table for a period of time (to T_3) so that the table motion can be brought to zero and the table relocked before the end of the gating interval, T_1. Designate counts accumulated during this gating interval as C_{Y_2}.

Record the table frequency (f), the zero-to-peak amplitude (θ_I) of the table oscillation, the different time periods of the test, and the accumulated pulse counts C_{Y_1}, and C_{Y_2}.

Select the lowest table frequency to be at least _____ octaves above the motor hunting frequency of the gyro, so that the actual rates coupled into the sensitive element will not vary as a function of frequency. Select the time for rate table oscillation to be sufficiently long to minimize the transient effects of table startup and shutdown.

10.14.3.5 Synchronous Vibration Sensitivity

(1) *One-N (1N) Translational Sensitivity.* Mount the gyro in the fixture on the linear vibrator with the Z axis nominally parallel to the direction of vibration. Operate the gyro in the angular rate sensing mode (see 8.2) in accordance with the test conditions of 9.1. Record the X and Y torquer currents, i_{X_1} and i_{Y_1}, prior to vibration. Apply a linear sinusoidal vibration at a frequency locked to the gyro spin speed at an amplitude equivalent to _____ g [peak-to-peak, rms, _____]. Record the X and Y torquer currents, i_{X_2} and i_{Y_2}.
(2) *Two-N (2N) Translational Sensitivity.* Mount the gyro in the fixture on the linear vibrator with the Z axis nominally perpendicular to the direction of vibration. Oper-

Copyright The Institute of Electrical and Electronics Engineers, Inc.
Provided by IHS under license with IEEE
No reproduction or networking permitted without license from IHS
Not for Resale

ate the gyro in the angular rate sensing mode (see 8.2) in accordance with the test conditions of 9.1. Record the X and Y torquer currents, i_{X_1} and i_{Y_1}, prior to vibration. Apply a linear sinusoidal vibration at a frequency locked to twice the gyro spin speed at an amplitude equivalent to _____ g [peak-to-peak, rms, _____]. Vary the phase between the vibrator and gyro motor frequencies to obtain maximum X torquer current i_{X_2}. Record i_{X_2} and the Y torquer current i_{Y_2}. Subsequently vary the phase to obtain maximum Y torquer current i_{Y_3}. Record i_{Y_3} and the X torquer current i_{X_3}.

(3) *Two-N (2N) Angular Sensitivity.* Mount the gyro in the fixture on the rotary vibrator with the X axis coincident with the axis of the vibrator to within _____ cm and aligned to within _____ milliradian. Operate the gyro in the angular rate sensing mode (see 8.2) in accordance with the test conditions of 9.1. Prior to vibration, record the X and Y torquer currents, i_{X_1} and i_{Y_1}. Apply an angular sinusoidal vibration at a frequency locked to twice the gyro spin speed at an angular acceleration of _____ rad/s^2. Vary the phase between the vibrator and gyro motor frequencies to obtain maximum X torquer current i_{X_2}. Record i_{X_2} and the Y torquer current i_{Y_2}. Subsequently vary the phase to obtain maximum Y torquer current i_{Y_3}. Record i_{Y_3} and the X torquer current i_{X_3}.

The tests may be repeated at different amplitude levels. The linear and angular vibration amplitudes must be below levels that may cause performance degradation or damage to the gyro. For accurate results, unwanted inputs into the gyro must be avoided. These may be due to unwanted rotary motions in the linear vibrator or due to axis misalignments when testing on the rotary vibrator.

10.14.3.6 Torquer Current Rectification Drift Rate

10.14.3.6.1 Angular Rate Sensing Mode, Method 1. Mount the gyro in the fixture so that the gyro X axis is vertical within _____ arc minutes and the Y axis is east within _____ arc minutes. Operate the gyro in the rate-sensing mode (see 8.2) in accordance with the standard test conditions of see 9.1.

Connect the X torquer to the torquer current measurement equipment. Connect the differential input of the appropriate torque amplifier to a variable oscillator capable of producing alternating torquer currents up to _____ mA peak at various frequencies from _____ to _____ kHz in _____ kHz steps.

Connect the readout quantizer to the gyro and to the up-down counter. Gate the counter to accumulate pulses over a selected gating interval of _____ s. With zero output of the oscillator, accumulate pulses over this interval. Designate the accumulated pulses as C_1.

Begin a second accumulation of pulses. After _____ seconds adjust or switch the oscillator so as to produce a torquer current of _____ ± _____ mA peak at a frequency of _____ ± _____ kHz. Continue to apply the alternating torquer current for a period of time so that the oscillator output can be brought to zero before the end of the gating interval. Designate counts accumulated during this gating interval as C_2.

Record the oscillator frequency, the amplitude of applied torquer current, the time during which the alternating torquer current was applied, and the accumulated pulse counts C_1, C_2.

Repeat the procedure at the following frequencies: _____ kHz.

Remount the gyro with the Y axis vertical and the X axis east. Reconnect the current measuring equipment and the variable oscillator to the Y torquer and its amplifier. Repeat the above test.

10.14.3.6.2 Angular Displacement Sensing Mode, Method 2. Align the servo table rotational axis to within _____ arc minutes of vertical. Mount the gyro in the fixture on the servo table so that the X axis is parallel to the table rotational axis within _____ arc minutes. Operate the gyro in the angular displacement sensing mode such that the servo table maintains the gyro in a null condition (see 8.1) in accordance with the standard test conditions of 9.1.

Connect the gyro Y torquer via a high impedance to a variable oscillator capable of producing alternating torquer currents up to ___ mA peak at various frequencies from _____ to _____ kHz in _____ kHz steps.

Connect the table angular position output device to the servo-driven table position recording equipment. With zero output from the oscillator, measure the change in table angular displacement over a selected interval of _____ seconds. Designate this angular displacement change as θ_1.

Begin a second measurement of change in table angular displacement.

After _____ seconds adjust or switch the oscillator so as to produce a torquer current of

Copyright The Institute of Electrical and Electronics Engineers, Inc.
Provided by IHS under license with IEEE
No reproduction or networking permitted without license from IHS
Not for Resale

_____ ± _____ mA peak at a frequency of _____ ± _____ kHz. Continue to apply the alternating torquer current for a period of time so that the oscillator output can be brought to zero before the end of the selected measurement interval. Designate this change of table angular position as θ_2.

Record the oscillator frequency, the amplitude of torquer current, the time during which the alternating torquer current was applied, and the measured changes of table displacement θ_1, θ_2.

Repeat the procedure at the following frequencies: _____ kHz.

Remount the gyro with the Y axis parallel to the table rotational axis. Reconnect variable oscillator to the X torquer. Repeat the above test.

> The selection of alternating torquer current amplitudes and frequencies should be based on a Fourier analysis of the waveform to be encountered in the application. Select the time for application of the current to be sufficiently long to minimize the transient effect of bringing up, turning down, or switching the oscillator amplitude. The rectification effect varies with tuning of the torquer, the applied frequencies, and the gain of the gyro capture loop.

10.14.3.7 Rotor Speed Sensitivity. Align the dividing head spindle axis to within _____ minutes of vertical. Mount the gyro in the fixture on the dividing head so that the Z axis is vertical within _____ degrees. Connect the gyro to the capture electronics and measuring equipment. Operate the gyro in accordance with the standard test conditions of 9.1.

Adjust the variable frequency spin supply so that the gyro is operating within _____ Hz of the tuned speed established in 10.12. Measure and record the torquer currents. Apply an electrical pickoff offset voltage to the X pickoff equivalent to _____ arc seconds, θ_x.

(1) Adjust the spin frequency so the gyro is operating at _____ Hz, f_a, above the tuned speed. Measure and record the torquer currents, i_{Xa}, i_{Ya}.

(2) Adjust the spin frequency so the gyro is operating at _____ Hz, f_b, below the tuned speed. Measure and record the torquer currents, i_{Xb}, i_{Yb}.

10.14.3.8 Random Drift Rate. Mount the gyro in the fixture on the dividing head so that the gyro Z axis is [vertical, horizontal, _____] within _____ arc minutes and the X axis is [east, _____] within _____ arc minutes. Operate the gyro in accordance with the standard test conditions of 9.1. Connect the gyro to the torquer current measuring equipment. Record the torquer currents for _____ [minutes, hours].

10.14.3.9 Drift Rate Stability. Mount the gyro in the fixture in a fixed orientation. Operate the gyro in accordance with the standard test conditions of 9.1 except for the conditions specified in Section _____.

Connect the gyro to the torquer measuring equipment. Record the torquer currents for _____ [minutes, hours, days] of continuous operation.

10.14.3.10 Hysteresis Error

10.14.3.10.1 Method 1. Align the rate table rotational axis within _____ arc minutes of vertical. Mount the gyro in the fixture on the rate table with the X axis aligned parallel to the rate table rotational axis within _____ arc minutes.

Operate the gyro in the rate-sensing mode (see 8.2) in accordance with the standard test conditions of 9.2. Rotate the table at _____ ± _____ °/s counterclockwise. Disengage the rate table servo drive and let the table coast to a stop. Gently rotate the table in the counterclockwise direction until the Y axis points north within _____ arc minutes. With the rate table at rest, record the torquer [current, pulse rate]. Repeat the above procedure using clockwise rotation. Repeat the test with the Y axis parallel to the table rotational axis.

10.14.3.10.2 Method 2. Mount the gyro in the holding fixture on a stable surface such that the Z axis is vertical within ± _____ degrees. Connect the gyro to the capture electronics and test equipment. Operate the gyro in the rate-sensing mode (see 8.2) in accordance with the standard test conditions of 9.2. Open the gyro loop. Apply an external dc current of + _____ [mA, A] to the X torquer for _____ seconds. Remove the dc current and close the gyro loop. After _____ minutes, record the X torquer current. Repeat the above, using a negative current. Record the resulting X torquer current. Repeat the above with the Y torquer.

10.14.4 Test Results

10.14.4.1 Acceleration-Insensitive Drift Rate and Acceleration-Sensitive Drift Rate Coefficients

10.14.4.1.1 Magnitude. From the test data obtained in 10.14.3.1.1, identify each measurement of X and Y torquer currents according to Table 1.

Compute the drift coefficients according to Table 2.

Copyright The Institute of Electrical and Electronics Engineers, Inc.
Provided by IHS under license with IEEE
No reproduction or networking permitted without license from IHS

Not for Resale

Table 1
Torquer Current Designations for Multiposition Drift Rate Test

Angular Position About Z	Z Vertical Orientation				Z Horizontal Orientation			
	Case Axis Direction		Torquer Designation		Case Axis Direction		Torquer Designation	
	X	Y	X	Y	X	Y	X	Y
0°	North	West	i_{X11}	i_{Y11}	Down	West	i_{X21}	i_{Y21}
90°	West	South	i_{X12}	i_{Y12}	West	Up	i_{X22}	i_{Y22}
180°	South	East	i_{X13}	i_{Y13}	Up	East	i_{X23}	i_{Y23}
270°	East	North	i_{X14}	i_{Y14}	East	Down	i_{X24}	i_{Y24}

Table 2
Computation of Drift Rate Coefficients From Multiposition Drift Rate Test

Coefficient	Equations
$D(x)_F$	$(K_{TOY}/4)\left[\sum_{j=1}^{4} i_{Y2j}\right]$
$D(x)_Z$	$(K_{TOY}/4)\left[\sum_{j=1}^{4} i_{Y1j} - \sum_{j=1}^{4} i_{Y2j}\right]$
$D(x)_X$	$(K_{TOY}/2)\left[i_{Y23} - i_{Y21} + \phi_y (i_{Y22} - i_{Y24})\right] - \omega_{EV}$
$D(x)_Y$	$(K_{TOY}/2)\left[i_{Y22} - i_{Y24} + \phi_x (i_{Y23} - i_{Y21})\right]$
$D(y)_F$	$(K_{TOX}/4)\left[\sum_{j=1}^{4} i_{X2j}\right]$
$D(y)_Z$	$(K_{TOX}/4)\left[\sum_{j=1}^{4} i_{X1j} - \sum_{j=1}^{4} i_{X2j}\right]$
$D(y)_X$	$(K_{TOX}/2)\left[i_{X23} - i_{X21} + \phi_y (i_{X22} - i_{X24})\right]$
$D(y)_Y$	$(K_{TOX}/2)\left[i_{X22} - i_{X24} + \phi_x (i_{X23} - i_{X21})\right] - \omega_{EV}$

where

$\phi_x = \tan^{-1}\left[(i_{Y12} - i_{Y14} / (i_{Y11} - i_{Y13})\right]$

$\phi_y = \tan^{-1}\left[(i_{X13} - i_{X11} / (i_{X14} - i_{X12})\right]$

$K_{TOX} = 2\omega_{EH}/\left[(i_{X11} - i_{X13})^2 + (i_{X12} - i_{X14})^2\right]^{1/2}$

$K_{TOY} = 2\omega_{EH}/\left[(i_{Y11} - i_{Y13})^2 + (i_{Y12} - i_{Y14})^2\right]^{1/2}$

ϕ_x = CW misalignment of X axis about the Z axis relative to North

ϕ_y = CCW misalignment of Y axis about the Z axis relative to West

ω_{EV} = vertical component of earth rate

ω_{EH} = horizontal component of earth rate

Copyright The Institute of Electrical and Electronics Engineers, Inc.
Provided by IHS under license with IEEE
No reproduction or networking permitted without license from IHS
Not for Resale

The results shall conform to the requirements of Sections _____.

10.14.4.1.2 Repeatability. The results shall conform to the requirements of Sections _____.

10.14.4.1.3 Temperature Sensitivity. The results shall conform to the requirements of Section _____.

10.14.4.1.4 Stability. The results shall conform to the requirements of Section _____.

10.14.4.2 Acceleration-Squared-Sensitive Drift Rate Coefficients. The average torquer current differences determined in position 1 (Δ_1) and position 2 (Δ_2) of 10.14.3.2 are proportional to the acceleration-squared-sensitive drift rates. The acceleration-squared-sensitive drift rate coefficients are calculated as indicated below using the command rate scale factor K_{TO} as determined in 10.7.3 where a_v is the applied vibratory acceleration in g peak.

$$D(y)_{XZ} = \frac{4K_{TOX}\,\Delta_1\,i_X}{a_v^2}$$

$$D(x)_{XZ} = \frac{4K_{TOY}\,\Delta_1\,i_Y}{a_v^2}$$

$$D(y)_{YZ} = \frac{4K_{TOX}\,\Delta_2\,i_X}{a_v^2}$$

$$D(x)_{YZ} = \frac{4K_{TOY}\,\Delta_2\,i_Y}{a_v^2}$$

10.14.4.3 Anisoinertia Drift Rate Coefficient. The anisoinertia drift rate coefficient is calculated as follows:

$$\frac{K_{TY}\,(i_{Y_2} - i_{Y_1})}{(\pi f\,\theta_I)^2}$$

The results shall conform to the requirements of Section _____.

10.14.4.4 Cross-Coupling Drift Rate. The cross-coupling oscillatory drift rate shall be calculated as follows.

$$\frac{K_q\,(C_{Y_2} - C_{Y_1})}{(T_3 - T_2)\cdot(\theta_1\,\pi f)^2}$$

where K_q is the quantizer scale factor.

The results shall conform to the requirements of Section _____.

10.14.4.5 Synchronous Vibration Sensitivity. For each of the tests in 10.14.3.5 calculate the change in drift rates:

$$\left[\{K_{TOX}\,(i_{X_1} - i_{X_2})\}^2 + \{K_{TOY}\,(i_{Y_1} - i_{Y_2})\}^2\right]^{1/2}$$

and

$$\left[\{K_{TOX}\,(i_{X_1} - i_{X_3})\}^2 + \{K_{TOY}\,(i_{Y_1} - i_{Y_3})\}^2\right]^{1/2}$$

Divide the results by the input levels of the applied vibrations to obtain the synchronous vibration sensitivities. The results shall conform to the requirements of Section _____.

10.14.4.6 Torquer Current Rectification Drift Rate

10.14.4.6.1 Angular Rate Sensing Mode, Method 1. For both axes, divide the difference between counts ($C_1 - C_2$) by the time during which the alternating torquer current was applied. Divide this quotient by the gyro quantizer scale factor, that is, pulses per arc second.

The results shall conform to the requirements of Section _____.

10.14.4.6.2 Angular Displacement Sensing Mode, Method 2. For both axes, divide the difference between table displacement changes ($\Theta_1 - \Theta_2$) by the time during which the alternating torquer current was applied.

The results shall conform to the requirements of Section _____.

10.14.4.7 Rotor-Speed Sensitivity. Compute the rotor speed sensitivity as follows:

$$\text{Rotor speed sensitivity} = \frac{i_{Ya} - i_{Yb}}{f_a - f_b} \cdot \frac{K_{TOY}}{\theta_x}$$

The results shall conform to the requirements of Section _____.

10.14.4.8 Random Drift Rate

10.14.4.8.1 Method 1. Divide the recording of the gyro X and Y torquer currents obtained in 10.14.3.9 into L equal time intervals of _____, Mins. Determine the average X and Y torquer currents during each interval. The random drift rates (1σ) are then calculated as:

$$\sigma = \left[\frac{1}{L-1}\sum_{i=1}^{L}(V_i - \bar{V})^2\right]^{1/2} \cdot K_{TO}$$

where V_i is the average value of the ith sample, $\bar{V}$ is the mean value of the L samples, and K_{TO} is the nominal gyro command rate scale factor as determined in 10.7.4.1. The random drift rates shall conform to the requirements of Section _____.

The validity of the best estimate of the standard deviation as a statistical parameter is based upon the assumption that no deterministic functions are present (for example, ramp, sinusoidal, etc). Since the data may contain

Copyright The Institute of Electrical and Electronics Engineers, Inc.
Provided by IHS under license with IEEE
No reproduction or networking permitted without license from IHS

Not for Resale

deterministic functions, an attempt to identify and remove these before computation of σ may be appropriate. If this is done, limits for these effects should be specified.

The magnitude of σ may vary considerably with the length of the data-averaging interval. If the data distribution is Gaussian, the magnitude of σ will vary as the inverse square root of the averaging interval; therefore, results from tests with different averaging intervals may be compared after normalizing to a common interval. If this is done, the time interval should be specified.

10.14.4.8.2 Method 2. From the data obtained in 10.14.3.9 calculate the drift rate power spectral density over the bandwidth from _____ to _____ Hz. The gyro random drift rate is calculated as the square root of the integral of the drift rate power spectral density function over the bandwidth from _____ to _____ Hz. The random drift rate shall conform to the requirements of Section _____.

10.14.4.9 Drift Rate Stability. The results obtained in 10.14.3.9 shall conform to the requirements of Section _____.

10.14.4.10 Hysteresis Error

10.14.4.10.1 Method 1. Calculate the hysteresis error by multiplying the difference in the torquer currents after counterclockwise and clockwise rotations by the command rate scale factor.

The results shall conform to the requirements of Section _____.

10.14.4.10.2 Method 2. Calculate the hysteresis error by multiplying the difference in the resulting currents (from 10.14.3.10) for the X axis by the X axis command rate scale factor and the Y axis difference by the Y axis command rate scale factor. The results shall conform to the requirements of Section _____.

10.15 Spring Rate Drift Rate Coefficients

10.15.1 Purpose. The purpose of this test is to measure the in-phase and quadrature spring rate drift rate coefficients.

10.15.2 Test Equipment

In addition to the standard operating equipment from 9.2.2, the following test equipment from 9.2.3 is required for this test and shall be listed in this section:

(1) Means of measuring gyro torquer currents
(2) Means of electrically offsetting the pickoff outputs.

10.15.3 Test Setup and Procedure. Mount the gyro in the fixture on a stable surface so that the case Z axis is vertical within _____ degrees and the X axis is north within _____ degrees. Connect the gyro to the capture electronics and the test equipment. Operate the gyro in accordance with the test conditions of 9.1. Adjust the X pickoff offset control to null. Measure and record the X and Y torquer currents. Adjust the X pickoff offset control to provide an X pickoff voltage of _____ ± _____ Vrms (V_{PX}). Measure and record the new X and Y torquer currents.

10.15.4 Test Results. Calculate the change in torquer currents resulting from the change in pickoff offset and calculate the spring rate drift coefficients as follows:

$$\text{In-phase spring rate drift rate coefficient} = \frac{\Delta i_Y \cdot K_{TOY} \cdot K_{PX}}{V_{PX}} \text{ (°/h)/″}$$

$$\text{Quadrature spring rate drift rate coefficient} = \frac{\Delta i_X \cdot K_{TOX} \cdot K_{PX}}{V_{PX}} \text{ (°/h)/″}$$

where

K_{PX} = X pickoff scale factor in volts/″

10.16 Dynamic Response Test Series

10.16.1 Purpose. The purpose of this test series is to measure the open-loop frequency response, closed-loop frequency response, and loop disturbance response.

10.16.2 Test Equipment

In addition to the standard operating equipment from 9.2.2, the following test equipment from 9.2.3 is required for this test and shall be listed in this section.

(1) Oscillating rate table
(2) Means of measuring and recording table displacements and rates
(3) Means of measuring amplitude and phase of the pickoff output and torquer currents with respect to the rate-table displacements and rates
(4) Gyro torquer bias supply
(5) Variable frequency oscillator

10.16.3 Test Setup and Procedure

10.16.3.1 Open-Loop Response. Align the oscillating rate table axis to within _____ arc minutes of vertical. Mount the gyro in the fixture on the table so that the X case axis is parallel to the table rotational axis and the Y case axis is north within _____ arc minutes. Connect the gyro pickoff outputs to the output measuring equipment and the gyro torquer to the current

Copyright The Institute of Electrical and Electronics Engineers, Inc.
Provided by IHS under license with IEEE
No reproduction or networking permitted without license from IHS
Not for Resale

supply. Operate the gyro in accordance with the standard test conditions of 9.1. Adjust the torquer currents to maintain the pickoff outputs at null within _____ mV. Operate the table at a frequency of _____ ± _____ Hz and an angular displacement amplitude of _____ ± _____ arc minutes. Record the peak-to-peak amplitude of the angular displacement input, the peak-to-peak amplitude of the gyro pickoffs, and the phase of the demodulated pickoff outputs with respect to the displacement input. Repeat the above procedure at the following frequencies: _____ Hz.

It may be necessary to select table displacement angles as a function of frequency to produce easily discernible signals from the gyro pickoffs, but not so high as to cause the rotor to reach the stops or to exceed the mechanical overload specification. It may be necessary to readjust the torquer bias currents to maintain symmetrical outputs.

Instead of manually adjusting the torquer currents with variable bias supplies, low-gain capture loops may be used to maintain the pickoff outputs symmetrical about null. However, consideration should then be given to the magnitude of the errors in the low-frequency range introduced by this technique.

If a two-axis characterization of the response is desired, repeat the test with the Y axis parallel to the table axis.

10.16.3.2 Closed-Loop Response

10.16.3.2.1 Angular Input Method. Align the oscillating rate table axis to within _____ arc minutes of vertical. Mount the gyro in the fixture on the rate table so that the X case axis is parallel to the table rotational axis and the Y case axis is north within _____ arc minutes. Connect the gyro to the capture electronics and test equipment. Operate the gyro in accordance with the standard test conditions of 9.1. Operate the table at a frequency of _____ Hz and rate amplitude of _____ ± _____ °/s. Record the peak-to-peak amplitude of the input rate, the peak-to-peak amplitude of the gyro torquer currents and phase of the gyro torquer currents with respect to the rate inputs. Repeat the above procedure at the following frequencies: _____ Hz.

It may be necessary to adjust table rates as a function of frequency to produce easily discernible torquer current outputs, but not so high as to cause the rotor to reach the stops or exceed the mechanical overload specification. It may also be necessary to provide torquer bias currents to maintain symmetrical outputs and limit gyro drift.

If a two-axis characterization of the response is desired, repeat the test with the Y axis parallel to the table axis.

10.16.3.2.2 Loop Disturbance Method. Mount the gyro in the fixture on a stable surface so that the X case axis is vertical to within _____ arc minutes and the Y case axis is north to within _____ arc minutes. Connect the gyro to the capture electronics and test equipment. Connect the output measuring equipment and the variable oscillator to the X channel of the capture electronics in accordance with Fig 8. Operate the gyro in accordance with the standard test conditions of 9.1. Operate the variable oscillator to maintain a peak oscillator output signal equivalent to _____ ± _____ °/s.

Record the peak-to-peak amplitude of the oscillator output, the peak-to-peak amplitude and phase at the pickoff measuring equipment with respect to the oscillator output. Repeat the entire procedure at the following frequencies: _____ Hz.

If a two-axis characterization of the response is desired, repeat the test with the oscillator input connected to the Y channel of the capture electronics.

10.16.4 Test Results

10.16.4.1 Open-Loop Response. Divide the X pickoff data obtained at each frequency in 10.16.3.1 by the X pickoff scale factor. Divide the pickoff angle thus obtained by the input displacement. From this quotient calculate the direct axis amplitude and phase response. From the Y-pickoff data calculate the cross-axis amplitude and phase response. The results shall conform to the requirements of Section _____.

10.16.4.2 Closed-Loop Response

10.16.4.2.1 Angular Input Method. Multiply the X torquer current data obtained at each frequency in 10.16.3.2.1 by the command rate scale factor as determined in Section _____. Divide the output rate thus obtained by the input rate. From this quotient calculate the direct axis amplitude and phase response. From the Y torquer current data, calculate the cross-axis amplitude and phase response. The results shall conform to the requirements of Section _____.

10.16.4.2.2 Loop Disturbance Method. From the X channel data obtained at each frequency in 10.16.3.2.2 calculate the direct axis amplitude and phase response. From the Y channel data calculate the cross-axis amplitude and phase response. The results shall conform to the requirements of Section _____.

Copyright The Institute of Electrical and Electronics Engineers, Inc.
Provided by IHS under license with IEEE
No reproduction or networking permitted without license from IHS

Not for Resale

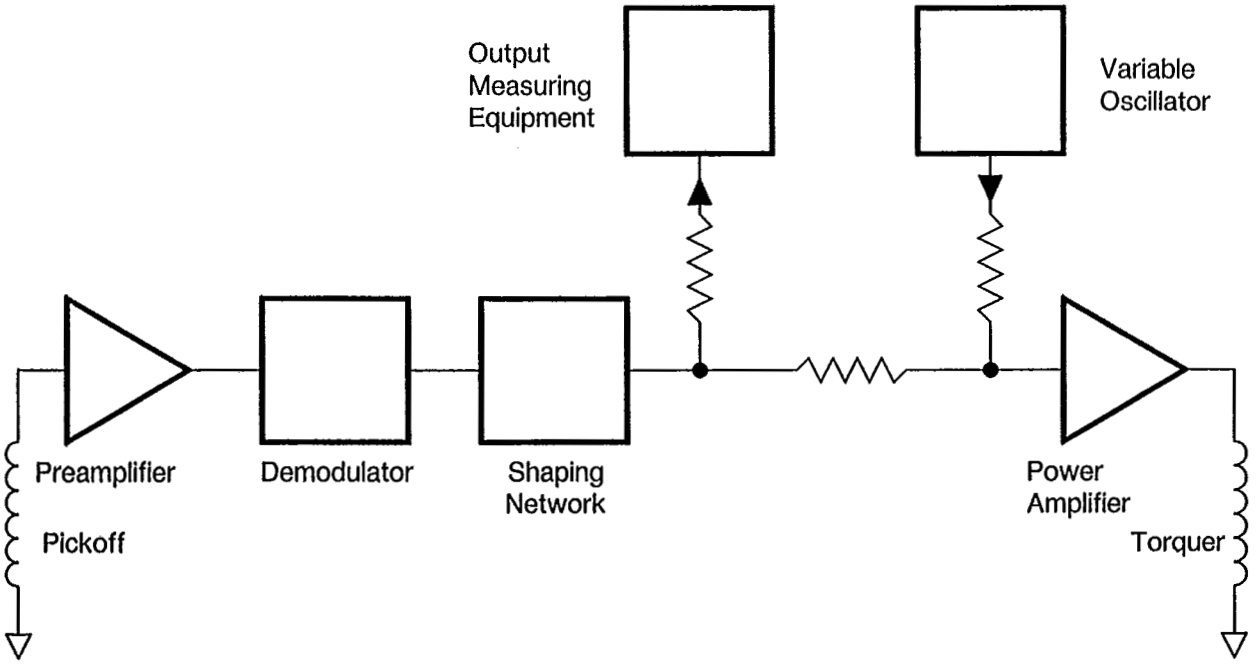

Fig 8
Typical Loop Disturbance Test Diagram

10.17 Output Noise

10.17.1 Purpose. The purpose of this test is to measure the gyro output noise.

10.17.2 Test Equipment

In addition to the standard operating equipment from 9.2.2, the following test equipment from 9.2.3 is required for this test and shall be listed in this section:

(1) Spectrum analysis equipment
(2) Means of recording gyro torquer current
(3) Means of integrating torquer current
(4) Gyro torquer supply
(5) Means of recording gyro pickoff output
(6) Means of measuring elapsed time

10.17.3 Test Setup and Procedure

In the following procedures, the axis under test may be oriented east as indicated, or north if it is desired to superimpose earth's rate. Alternatively, data may be taken and reduced for both east and north axes simultaneously.

10.17.3.1 Method 1. Mount the gyro in the fixture on the dividing head so that the gyro Z axis is vertical within _____ arc minutes and the [X, Y] axis is east within _____ arc minutes. Operate the gyro in the rate-sensing mode (see 8.2) in accordance with the standard test conditions of 9.1.

The input axis may be rotated about the Z axis to a position which minimizes torquer current in order to improve resolution. Care must be exercised in the selection of a test pier that will not introduce noise that will mask or significantly add to the gyro output noise. Similarly, the capture loop should be equivalent in noise to the applications capture loop.

(1) *Method 1A.* Connect the gyro torquer to the spectrum analysis equipment and record the rms value between _____ Hz and _____ Hz. Repeat with the other axis oriented east.

(2) *Method 1B.* Connect the gyro torquer to the torquer current recording equipment. Start the recorder and record the torquer current for _____ [min, h]. Repeat with the other axis oriented east.

The recorder selected must have sufficient bandwidth to record noise over the bandpass of interest.

(3) *Method 1C.* Connect the gyro torquer to the current integrator and recording equip-

Copyright The Institute of Electrical and Electronics Engineers, Inc.
Provided by IHS under license with IEEE
No reproduction or networking permitted without license from IHS
Not for Resale

ment. Start the recorder and record the output for _____ [min, h]. Repeat with the other axis oriented east.

The recorder selected must have sufficient bandwidth to record noise over the bandpass of interest.

(4) *Method 1D.* Connect the output lines to the pulse counters. Record _____ [ms, s] samples of the pulse count for _____ [min, h]. Repeat with the other axis oriented east.

The length of the sample interval and the number of intervals must be selected so as to permit noise determination over the desired bandpass.

10.17.3.2 Method 2. Mount the gyro in the fixture on the dividing head so that the gyro Z axis is vertical within _____ arc minutes and the [X, Y] axis is east within _____ arc minutes. Operate the gyro in accordance with the standard test conditions of 9.1. Connect the precision current source to the gyro torquer. Adjust the torquer current until the pickoff output remains at null. (The average output shall not change more than _____ mV/min.)

(1) *Method 2A.* Connect the gyro pickoff to the spectrum analysis equipment. Record the rms value between _____ Hz and _____ Hz. Repeat with the other axis oriented east.

(2) *Method 2B.* Connect the gyro pickoff to the pickoff output recording equipment. Start the recorder and record the gyro pickoff output for _____ [min, h]. Repeat with the other axis oriented east.

This method is applicable when the measurement of output noise unmodified by capture loop electronics is desired.

10.17.4 Test Results

Power spectral density calculations are affected by aliasing and nonstationary processes such as trends and periodicities. Care should be taken that the data used for power spectral density calculations are not significantly affected by these error sources.

10.17.4.1 Method 1

(1) *Method 1A.* The torquer current measured in 10.15.3.1 multiplied by the command rate scale factor as determined in 10.7.4.1 is the gyro rate noise. The gyro rate noise shall conform to the requirements of Section _____.

(2) *Method 1B.* From the data obtained in 10.15.3.1 and the command rate scale factor as determined in 10.7.4.1,

(a) Calculate the noise power spectral density or

(b) Integrate the data and calculate the input angle noise power spectral density over the bandwidth from _____ Hz to _____ Hz. The gyro noise is then calculated as the square root of the integral of the power spectral density function over the bandwidth from _____ Hz to _____ Hz. The noise as calculated above shall conform to the requirements of Section _____.

(3) *Method 1C.* From the data obtained in 10.15.3.1 and the command rate scale factor determined in 10.7.4.1 calculate the input angle noise power spectral density over the bandwidth from _____ Hz to _____ Hz. The gyro noise is then calculated as the square root of the integral of the power spectral density function over the bandwidth from _____ Hz to _____ Hz. The noise as calculated above shall conform to the requirements of Section _____.

(4) *Method 1D, Alternative 1.* Multiply the pulse count data samples determined in 10.14.3.1 by the command rate scale factor determined in 10.7.4.1 to obtain incremental angle samples. Calculate the input angle noise power spectral density over the bandwidth from _____ Hz to _____ Hz. The gyro noise is then calculated as the square root of the integral of the power spectral density function over the bandwidth from _____ Hz to _____ Hz.

The noise as calculated above shall conform to the requirements of Section _____.

(5) *Method 1D, Alternative 2.* The Noise Equivalent Angle is calculated as follows: Multiply the total accumulated pulse count at the end of each sample interval, i, by the command rate scale factor determined in 10.7.4.1 (in ″/pulse) to obtain the delta angle, $\theta(i)$, from the start of the sample period (i=1). The slope and the bias of the best-fit straight line to these points is calculated as follows:

$$\text{slope} = \frac{\frac{12}{N+1}\sum_{i=1}^{N} i\cdot\theta(i) - 6\sum_{i=1}^{N}\theta(i)}{N(N-1)}$$

Copyright The Institute of Electrical and Electronics Engineers, Inc.
Provided by IHS under license with IEEE
No reproduction or networking permitted without license from IHS

Not for Resale

$$\text{bias} = \frac{2(2N+1)\sum_{i=1}^{N}\theta(i) - 6\sum_{i=1}^{N} i\cdot\theta(i)}{N(N-1)}$$

where

N = total number of sample intervals

The error at each sample point, $E(i)$, is calculated as follows:

$E(i) = \theta(i) - (i\cdot\text{slope} - \text{bias})$

The maximum value of $E(i)$, the Noise Equivalent Angle, shall conform to the requirements of Section ____.

The noise as calculated above shall conform to the requirements of Section ____.

10.17.4.2 Method 2

(1) *Method 2A.* The pickoff output voltage measured in 10.4.3.2 divided by the pickoff scale factor determined in 10.6.4.1 is the gyro input angle noise. The results shall conform to the requirements of Section ____.

(2) *Method 2B.* From the data recorded in 10.15.3.2 and the pickoff scale factor determined in 10.6.4.1, calculate the input angle noise power spectral density over the bandwidth from ____ Hz to ____ Hz. The gyro noise is calculated as the square root of the integral of the power spectral density function over the bandwidth from ____ Hz to ____ Hz. The noise as calculated above shall conform to the requirements of Section ____.

10.18 Generated Fields

10.18.1 Electromagnetic Interference. The purpose of these tests is to measure the electromagnetic emissions of the gyro.

> MIL-STD-462-1987 [6] is a reference commonly used in the United States to describe test procedures and equipment required for this test.
>
> These tests should be outlined in the following manner to conform to the format used in the rest of this standard:
>
> **10.18.1.1 Purpose**
> **10.18.1.2 Test Equipment**
> **10.18.1.3 Test Setup and Procedure**
> **10.18.1.4 Test Results**

10.18.2 Magnetic Leakage

10.18.2.1 Purpose. The purpose of this test is to determine the magnetic flux leakage of the gyro.

10.18.2.2 Test Equipment

> In addition to the standard operating equipment from 9.2.2, the following test equipment from 9.2.3 is required for this test and shall be listed here:
>
> (1) Magnetic field measuring equipment
> (2) Three-axis Helmholtz coil or shielded enclosure

10.18.2.3 Test Setup and Procedure

10.18.2.3.1 Without Gyro. Assure that the magnetic field is zero ± ____ gauss at the following positions surrounding the gyro test fixture without a gyro present: ____.

10.18.2.3.2 Gyro Mounted. Mount the gyro in the test fixture. Measure and record the magnitude and direction of the ambient magnetic field at the same positions as in 10.18.2.3.1.

10.18.2.3.3 Operating. Operate the gyro in accordance with the test conditions of 9.1 Repeat the measurements of 10.18.2.3.2.

10.18.2.4 Test Results

10.18.2.4.1 Nonoperating. The magnetic leakage for the nonoperating gyro shall be found by subtracting the measurements of 10.18.2.3.1 from the measurements of 10.18.2.3.2 for each position specified. The results shall conform to the requirements of Section ____.

10.18.2.4.2 Operating. The magnetic leakage for the operating gyro shall be found by subtracting the measurements of 10.18.2.3.1 from the measurements of 10.18.2.3.3 for each position specified. The results shall conform to the requirements of Section ____.

> Care should be taken in the design of the fixture to minimize its effect on the measurements.

10.19 Turn-On and Warm-Up Times

10.19.1 Turn-On Time

10.19.1.1 Purpose. The purpose of this test is to determine the time interval required for the gyro to reach specified useful output from the instant that it is energized under specified operating conditions.

10.19.1.2 Test Equipment

> In addition to the standard operating equipment from 9.2.2, the following test equipment from 9.2.3 is required for this test and shall be listed here:

Copyright The Institute of Electrical and Electronics Engineers, Inc.
Provided by IHS under license with IEEE
No reproduction or networking permitted without license from IHS
Not for Resale

(1) Means of measuring elapsed time
(2) Equipment for measuring the parameter of interest (refer to applicable performance and test sections).

10.19.1.3 Test Setup and Procedure. Operate the gyro in accordance with the standard test conditions of 9.1, except that the starting conditions shall be _____ and the starting sequence shall be _____.

Energize the gyro and record the parameter of interest as a function of time for _____ [s, min, h].

10.19.1.4 Test Results. The time for all parameters of interest to reach specified performance shall conform to the requirements of Section _____.

10.19.2 Warm-Up Time

10.19.2.1 Purpose. The purpose of this test is to determine the time interval required for the gyro to reach specified performance from the instant that it is energized under specific operating conditions.

10.19.2.2 Test Equipment

In addition to the standard operating equipment from 9.2.2, the following test equipment from 9.2.3 is required for this test and shall be listed here:
(1) Means of measuring elapsed time
(2) Equipment for measuring the parameter of interest (refer to applicable performance and test sections).

10.19.2.3 Test Setup and Procedure. Operate the gyro in accordance with the standard test conditions of 9.1, except that the starting conditions shall be _____ and the starting sequence shall be _____.

Energize the gyro and record the parameter of interest as a function of time for _____ [s, min, h].

10.19.2.4 Test Results. The time for all parameters of interest to reach specified performance shall conform to the requirements of Section _____.

10.20 Environmental Test Series. These tests are to verify that the gyro performs as specified during or after subjection to environments outside of the standard operating conditions, or both, but within the specified environmental limits.

Procedures for most environmental tests are covered by existing industry, government, and military documents, an example of which is MIL-STD-810D-1983 [10]. Table 3 is intended as a guide in selecting those parameters that are to be tested when the gyro is subjected to a given environment. Criteria used in generating the table include
(1) Importance of the stability and sensitivity of the parameter in a given environment and
(2) Practicability of running the test with existing equipment. Special testing to determine the gyro susceptibility to magnetic fields may be required. See 3.6.4.15. Testing should be limited to that required by the application.

The tests should be outlined in the following manner to conform to the format used in the rest of this standard:
1. Name of test
1.1 Purpose
1.2 Test equipment
1.3 Test setup and procedure
1.4 Test results

Copyright The Institute of Electrical and Electronics Engineers, Inc.
Provided by IHS under license with IEEE
No reproduction or networking permitted without license from IHS
Not for Resale

Copyright The Institute of Electrical and Electronics Engineers, Inc.
Provided by IHS under license with IEEE
No reproduction or networking permitted without license from IHS

813-88 4805702 0033479 0

Table 3
Environmental Test Series

Test Parameter / Environment	Exam. of Product (Mech.) (10.1)	Impedance (10.2.1)	Dielectric (10.2.2)	Insulation Resistance (10.2.3)	Leak Test (10.3)	Temp. Sensor Char. (10.5.1)	Operating Temp. (10.5.2)	Warm-up Time (10.19.2)	Pickoff Test Series (10.6)	Torquer Test Series (10.7)	Rotor Rotation Detector (10.8)	Spin Motor Test Series (10.9)	Axis Alignment (10.10)	Limit Stop (10.11)	Gyro Dynamic Time Constant (10.13)	Tuned Speed (10.12)	Rate Rate Series (10.14)	Output Noise (10.17)	Dyn. Resp. Test Series (10.16)	Electromag. Interfer. (10.18.1)	Magnetic Leakage (10.18.2)
Temperature	O N	D O N	O N	O N	O N	D N	D	D N	D N	D N	D	D O N			D O N	D O N	D O N	D O N	D O N	D	D
Temp. gradients	O N	O N				D		D N	D N	D N	D	D			D O N	O N	O N	O N	O N		
Thermal shock	O N	D O N	N	N	N	N		N	N	N	N	N					D		D	D	D
Excitation						D	D	D	D	D	D				O N	O N	O N	O N	O N		
Mech. shock	O N		O N	O N	O N	O N		O N	O N	O N	O N	O N	O N		O N	O N	D O N	O N	O N		
Linear Acceleration	O N										O N	O N	O N		O N	O N	O N	O N	O N		
Vibration, linear	O N	O N	O N	O N	O N	O N		O N	O N	O N	D O N	O N	O N			O N	D O N	O			
Vibration, angular	O	N													O	O	O	O			
Mech. overload								O	O		O	O	O		N	N	N	N	N	N	N
Life, storage	N	N	N	N	N	N	N	N	N	N	N	N	N		O	O	D	D	D	D	D
Life, operating		O				D	D	D	D	D	D						O	O			
Life, start-stop		O					D				D										
Fungus	N	N	N	N		N															
Humidity	N	N	N	N		N															
Salt spray	N	N	N	N		N									N O	N O	D O N	N O	N O		
Acoustic noise	O N	O N			O N	O N		O N	O N	O N	O N	O N	O N				D				
Thermal radiation	N	N				D	D										D				
Air currents						D	D										N				
Amb. air pressure	O				N	D	D								N	N	D N	N	N	N	N
Nuclear radiation	N	N	N	N	N	N	N	N	N	N	N	N					D	D	D		O
Magnetic fields								D	D	D							D	D	D		
Electromag. fields								D	D	D											
Sand and dust	N	N	N	N	N	N															
Solar radiation	N	N	N	N	N	N D	D														
Rain	N	N	N	N	N	N															

D = Gyro parametric test is to be conducted during the specified environment while the gyro is operating or nonoperating as applicable.
O = Gyro is to be operated during the specified environment, and the parametric test performed before and after.
N = Gyro is to be nonoperating during the specified environment, and the parametric test performed before and after.

Not for Resale

Appendixes

(These Appendixes are not a part of IEEE Std 813-1988, IEEE Specification Format Guide and Test Procedure for Two-Degree-of-Freedom Dynamically Tuned Gyros.)

Appendix A

Dynamically Tuned Gyro Design Features

Pickoffs	Spin Motor	Tuning Provisions
(1) Variable reluctance	(1) AC synchronous hysteresis (3-phase, 2-phase)	(1) Gimbal inertia adjustment
(2) Capacitance	(2) AC induction (with speed control) (3-phase, 2-phase)	(2) Flexure spring rate trimming
(3) Optical	(3) AC synchronous permanent magnet (3-phase, 2-phase)	(3) Motor speed control

Torquers	Rotor Rotation Detector	Shaft Support
(1) Permanent magnet	(1) Permanent magnet	(1) Ball bearing
(2) Solenoid	(2) Variable reluctance	(2) Hydrodynamic gas bearing
	(3) Optical	(3) Hydrodynamic liquid bearing

Rotor/Suspension	Optional Features
(1) (a) Single-gimbal (b) Multi-gimbal	(1) Temperature sensors (2) Heater (3) Output preamplifiers (4) Trim components
(2) Flexure	(5) Vibration isolator

Copyright The Institute of Electrical and Electronics Engineers, Inc.
Provided by IHS under license with IEEE
No reproduction or networking permitted without license from IHS

Not for Resale

Appendix B

Typical DTG Open-Loop Frequency Response

The relationship between *direct* and *cross* axis open-loop frequency response showing the effect of detuning of a typical DTG is shown in Fig B1:

where

FOM = figure of merit
τ = dynamic time constant
ω_n = nutation frequency
ΔN = deviation from tuned speed
ω = case angular displacement frequency

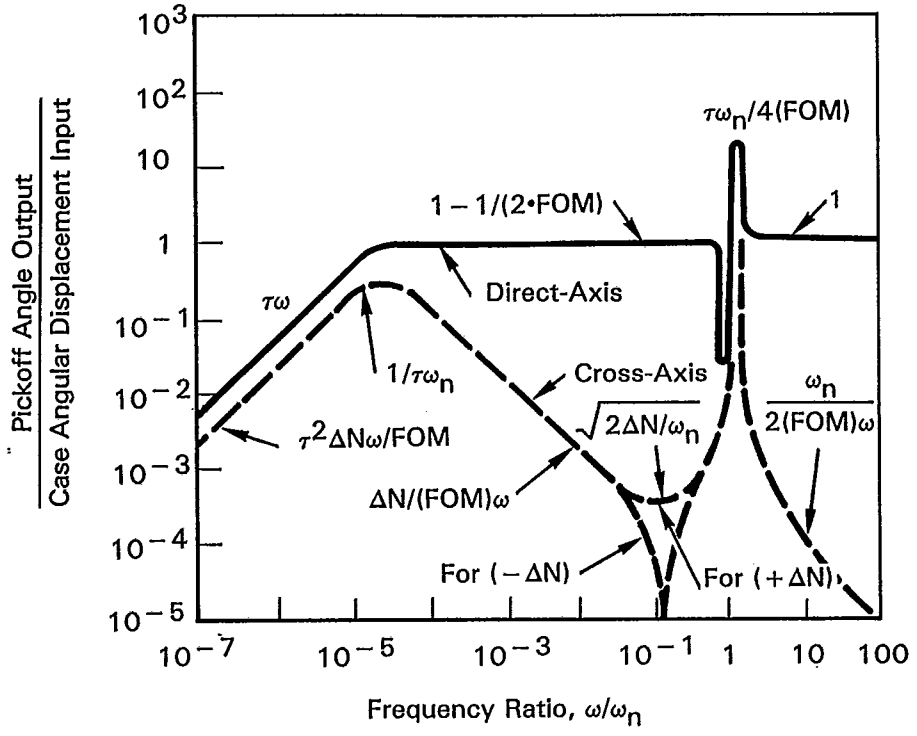

Fig B1
Typical DTG Open-Loop Frequency Response

Copyright The Institute of Electrical and Electronics Engineers, Inc.
Provided by IHS under license with IEEE
No reproduction or networking permitted without license from IHS

Not for Resale

Appendix C

A Guide to the Operation of a Dynamically Tuned Gyro (DTG)

The purpose of this guide is to provide a basis for understanding the DTG operation, axes, and polarity conventions that are used in this document.

The equations of a single-gimbal, flexure-supported rotor DTG *without case motion* have been developed by Savet[4] and are as follows:

$$\left(A+\frac{a}{2}\right)\ddot{\theta}_x + f\dot{\theta}_x + \left[k-\left(a-\frac{c}{2}\right)\omega_s^2\right]\theta_x + (C+a)\omega_s\dot{\theta}_y + \lambda\theta_y = -q_x\cos 2\omega_s t - q_y\sin 2\omega_s t + M_x \quad \text{(Eq C1)}$$

$$\left(A+\frac{a}{2}\right)\ddot{\theta}_y + f\dot{\theta}_y + \left[k-\left(a-\frac{c}{2}\right)\omega_s^2\right]\theta_y - (C+a)\omega_s\dot{\theta}_x - \lambda\theta_x = +q_y\cos 2\omega_s t - q_x\sin 2\omega_s t + M_y \quad \text{(Eq C2)}$$

where

$$q_x = \frac{a}{2}\ddot{\theta}_x + a\omega_s\dot{\theta}_y - \left(a-\frac{c}{2}\right)\omega_s^2\theta_x$$

$$q_y = \frac{a}{2}\ddot{\theta}_y - a\omega_s\dot{\theta}_x - \left(a-\frac{c}{2}\right)\omega_s^2\theta_y$$

a = gimbal radial moment of inertia
c = gimbal axial moment of inertia
f = coefficient of viscous friction
k = torsional spring constant
θ_x = angular deflection of rotor about x axis
θ_y = angular deflection of rotor about y axis
A = rotor radial moment of inertia
C = rotor axial moment of inertia
ω_s = angular velocity of rotor about spin axis
λ = quadrature spring constant
t = time
M_x = torque about x axis
M_y = torque about y axis

and where the gyro coordinates form a right-hand system defined by $x\ X\ y = s$.

Assuming that the $2\omega_s t$ coupling terms can be dropped[5]

$$I\ddot{\theta}_x + f\dot{\theta}_x + K_D\theta_x + J\omega_s\dot{\theta}_y + K_Q\theta_y = M_x \quad \text{(Eq C3)}$$

$$I\ddot{\theta}_y + f\dot{\theta}_y + K_D\theta_y - J\omega_s\dot{\theta}_x - K_Q\theta_x = M_y \quad \text{(Eq C4)}$$

where

$I = A + \frac{a}{2}$ *effective rotor transverse moment of inertia*

$K_D = k - \left(a - \frac{c}{2}\right)\omega_s^2$ *direct spring rate*

$K_Q = \lambda$ *quadrature spring rate*

$J = C + a$ *effective rotor polar moment of inertia*

Equations C3 and C4 may be simplified and become more recognizable with the following assumptions:

$K_D \simeq 0$ This is true when gyro is at *tuned* condition.

$K_Q \simeq 0$ Even at *tuned* condition there will be a residual quadrature spring rate; however, this effect is usually very small.

$f \simeq 0$ Most DTGs have sufficient clearance between the rotor and case.

With the above assumptions and since $H = J\omega_s$, equations C3 and C4 become the familiar equations for a free gyro:

$$I\ddot{\theta}_x + H\dot{\theta}_y = M_x \quad \text{(Eq C5)}$$

$$I\ddot{\theta}_y - H\dot{\theta}_x = M_y \quad \text{(Eq C6)}$$

If some means exist to damp the inertia reaction acceleration (that is, $\ddot{\theta} = 0$), then the equations may be written:

$$H\dot{\theta}_y = M_x \quad \text{(Eq C7)}$$

$$-H\dot{\theta}_x = M_y \quad \text{(Eq C8)}$$

which are physically explained as follows:

A positive torque about x, (M_x), causes a *positive* rotor precession rate about y, ($\dot{\theta}_y$).

A positive torque about y, (M_y), causes a *negative* rotor precession rate about x, ($-\dot{\theta}_x$).

[4] SAVET, PAUL H., Dynamics of Ideal Suspensions Applied to Rotating Bodies in Space; Journal of Spacecraft, vol 3, no 9, Sept 1966.

[5] CRAIG, R. J. G., Theory of Operation of an Elastically Supported, Tuned Gyroscope, *IEEE Transactions on Aerospace and Electronic Systems*, vol AES-8, no 3, May 1972.

Copyright The Institute of Electrical and Electronics Engineers, Inc.
Provided by IHS under license with IEEE
No reproduction or networking permitted without license from IHS
Not for Resale

The torque terms M_x and M_y can each be separated into two components:

$$M_x = M_x^c + M_x^e \quad \text{(Eq C9)}$$

$$M_y = M_y^c + M_y^e \quad \text{(Eq C10)}$$

where

$M_{x,y}^c$ = command torque about x, y axis
$M_{x,y}^e$ = error torque about x, y axis

Now

$$M_x^c = K_{TX}\, i_X \quad \text{(Eq C11)}$$

$$M_y^c = K_{TY}\, i_Y \quad \text{(Eq C12)}$$

where

$K_{TX,Y}$ = x, y axis torquer scale factor
$i_{X,Y}$ = x, y axis torquer current

The above equations have been derived without any concern for case motion effects. Since the DTG can only be useful with a case support system, it is necessary to determine how case motions influence DTG performance.

We can get some idea of the effect of case motion with the use of a series of block diagrams showing the DTG in various degrees of complexity starting with the simplified configuration (that is, Eqs C5 and C6).

As shown in the following block diagram (Fig C1) for the simplified system, there is no mechanization to transmit a torque into the rotor by moving the case. That is, θ_X and θ_Y (subscripts in upper case) which represent case angular deflections with respect to inertial space about the X and Y case axes, are inputs to summing points whose only other input is rotor angular deflection θ_x and θ_y (subscripts in lower case). The summing point output represents the sum of case and rotor deflections (that is, pickoff output). Case motion, θ_X and θ_Y, operate into an open loop and hence are prevented from applying a torque to the rotor (that is, at the torque summing point).

The basic form for the DTG includes a small spring rate, damping and effective gimbal angular momentum[2], H_g, where $H_g = (a - c/2)\,\omega_s$. The effect of these components can be examined with the aid of the block diagram shown in Fig C2. For this configuration, we see that case motion is only loosely coupled into the rotor (as indicated by the dashed lines).

As shown in the diagram, case motion can be coupled into the rotor by three separate paths: one path is through the *direct axis* damping and spring rate (fs + K); another path is through the effective gimbal angular momentum (H_gs); and the third path is through the *quadrature spring rate*, K_Q. Since K_D is a function of the square of the rotor speed ω_s, versus the spring constant, k, its magnitude will decrease quadratically as the wheel speed increases going to zero at tuned speed and changing polarity as the wheel speed exceeds tuned speed.

The path through K_Q, allows a torque to occur on the torquer and this torque will eventually cause the rotor to precess to a null. Thus, although it is a very low gain, there is a closed loop effect caused by K_Q. The magnitude of K_Q is related to the *gyro dynamic time constant*, T, by the following equation:

$$K_Q = \frac{H}{T} \quad \text{(Eq C13)}$$

There are basically two ways that the DTG can be instrumented. One is the captured mode and the other is the platform mode of operation. The captured mode can be schematically represented in the following way.

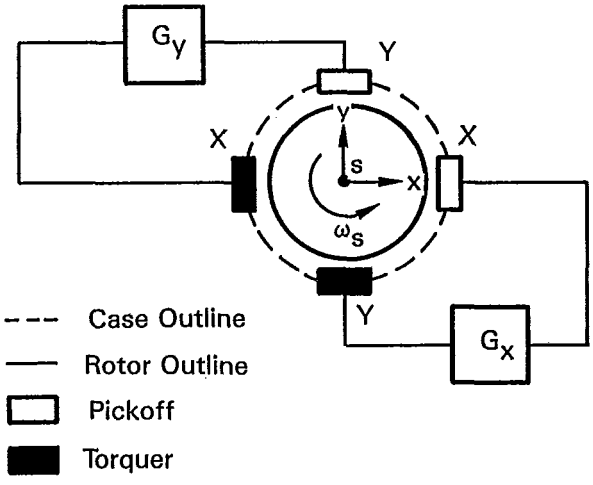

The Figure can be interpreted as follows:

The pickoffs marked X,Y measure angular deflection of the case with respect to the rotor about the x, y axis.

The torquers marked X,Y torque the rotor *about* the x, y axis.

Motions of the case about the x axis are amplified through a servo amplifier, G_x, *inverted* and applied to the y axis torquer.

Motions of the case about the y axis are amplified through a servo amplifier, G_y, and applied to the x axis torquer.

The block diagram of Fig C2 is modified slightly in Fig C3 to show this situation:

Copyright The Institute of Electrical and Electronics Engineers, Inc.
Provided by IHS under license with IEEE
No reproduction or networking permitted without license from IHS
Not for Resale

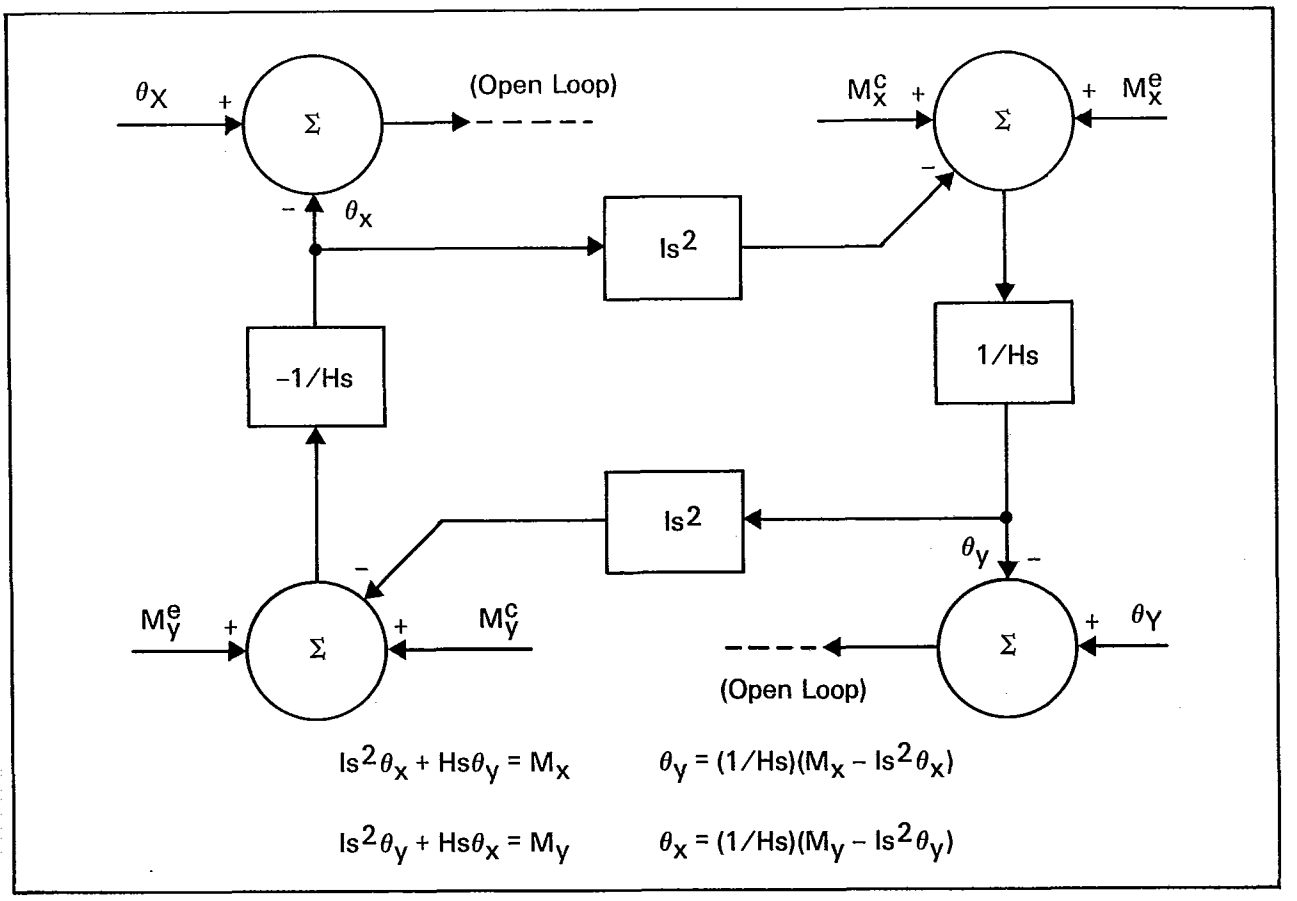

Fig C1
Simplified DTG Model (Free Gyro)
Block Diagram

As shown in Fig C3, X,Y case motion is amplified and applied directly to the Y, X torquer and we readily see that the rotor is now required to follow the case motion within the limitations of the servo loops.

Note also that the K_Q blocks as well as the direct spring rate and damping blocks are negligible compared with the servo gain blocks. The effective gimbal angular momentum introduces a dynamic coupling into the DTG that primarily effects the gyro at the nutation frequency. Therefore this term may also be neglected.[6]

The inertia reaction terms can be made to damp rapidly and thus can be eliminated from the diagram for clarity. This can be done either through the *direct* servo transfer functions, G_x and G_y, or cross-axis servo transfer functions, G'_x and G'_y, as shown in Fig C4.

If we assume cross-axis damping and that there are neither error torques nor misalignment of case and nonspinning-rotor coordinate frame, case motion is coupled to the rotor through command torques as follows:

Starting with Eqs C9 and C10, where

$$M_x^c = K_{TX} i_X \qquad \text{(Eq C14)}$$

$$M_y^c = K_{TY} i_Y \qquad \text{(Eq C15)}$$

and dropping the "*c*" superscript, we will derive the equations as follows:

$$e_x = K_{PX}(\theta_X - \theta_x) \qquad \text{(Eq C16)}$$

$$e_y = K_{PY}(\theta_Y - \theta_y)$$

where e_x and e_y are pickoff outputs.

For the *direct* axis servo:

$$i_X = G_y e_y \qquad \text{(Eq C17)}$$

$$M_x = K_{TX} G_y K_{PY}(\theta_Y - \theta_y) \qquad \text{(Eq C18)}$$

however

$$\theta_y = \frac{1}{Hs} M_x \qquad \text{(Eq C19)}$$

[6] See footnote 5.

Copyright The Institute of Electrical and Electronics Engineers, Inc.
Provided by IHS under license with IEEE
No reproduction or networking permitted without license from IHS

Not for Resale

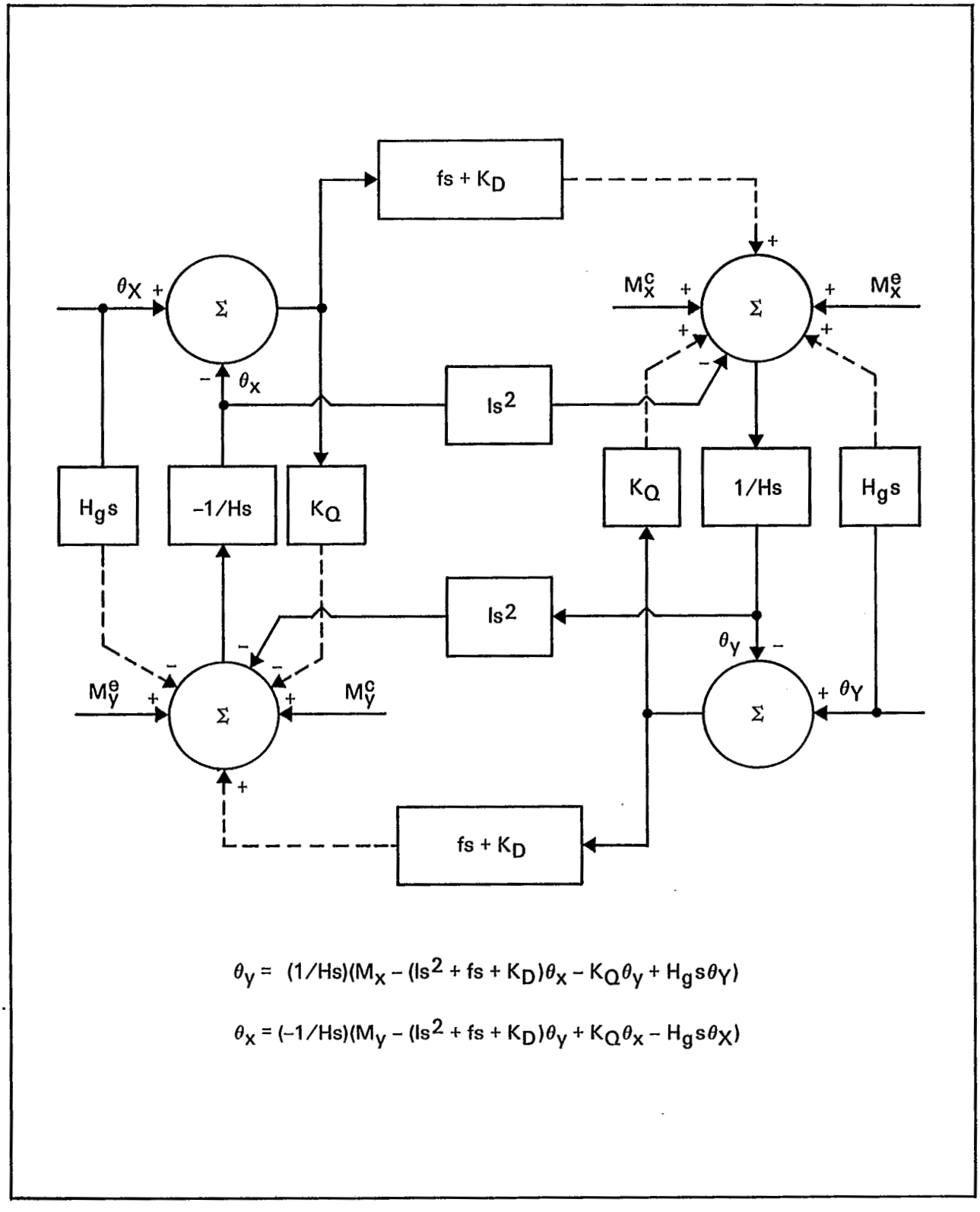

$$\theta_Y = (1/Hs)(M_X - (Is^2 + fs + K_D)\theta_X - K_Q\theta_Y + H_g s\theta_Y)$$

$$\theta_X = (-1/Hs)(M_Y - (Is^2 + fs + K_D)\theta_Y + K_Q\theta_X - H_g s\theta_X)$$

Fig C2
Block Diagram Showing Effect of Adding Spring Rates, Damping and Effective Gimbal Angular Momentum to DTG

Copyright The Institute of Electrical and Electronics Engineers, Inc.
Provided by IHS under license with IEEE
No reproduction or networking permitted without license from IHS

Not for Resale

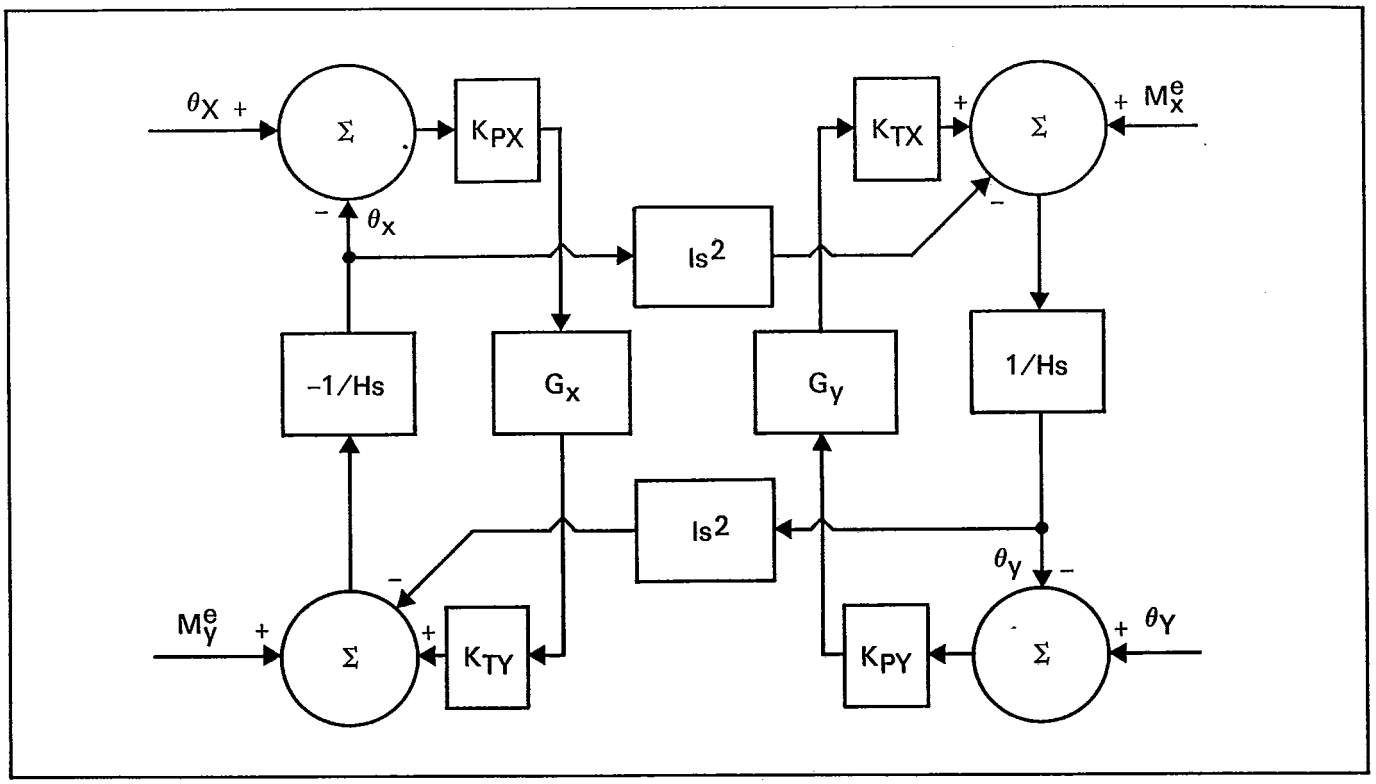

Fig C3
Caged DTG Model Block Diagram

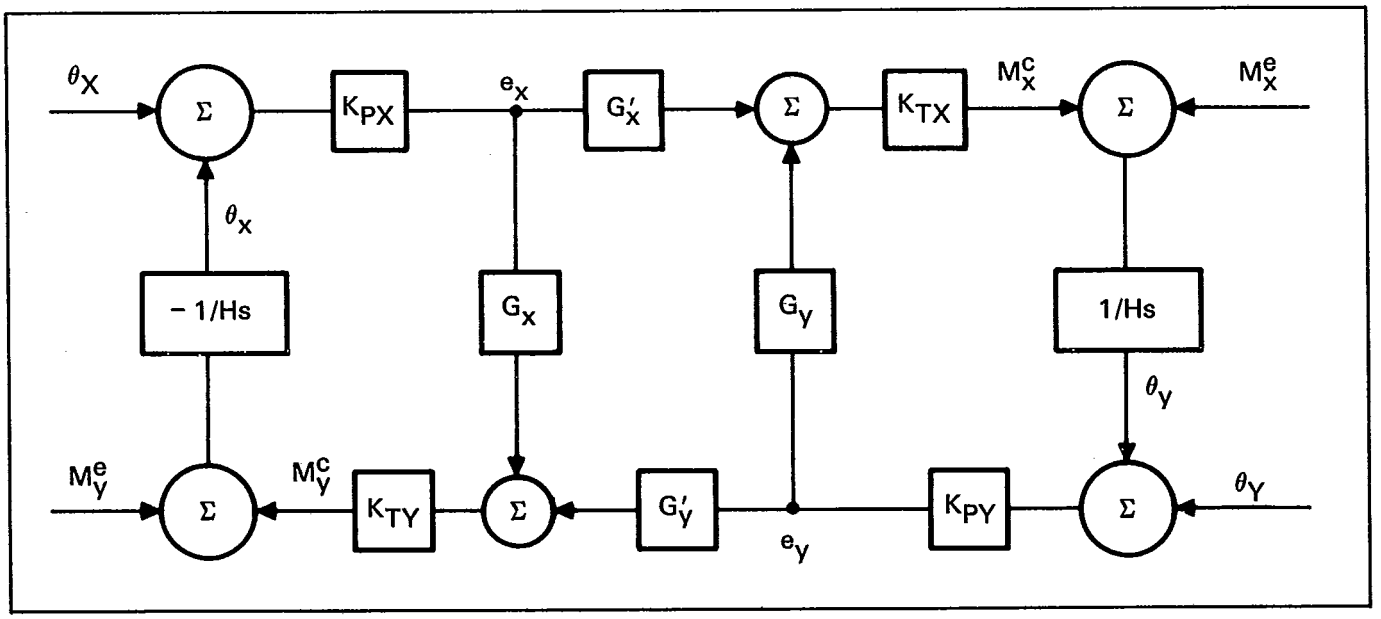

Fig C4
Caged DTG Model Block Diagram Showing
Cross-Axis Servo Compensation

Copyright The Institute of Electrical and Electronics Engineers, Inc.
Provided by IHS under license with IEEE
No reproduction or networking permitted without license from IHS

Not for Resale

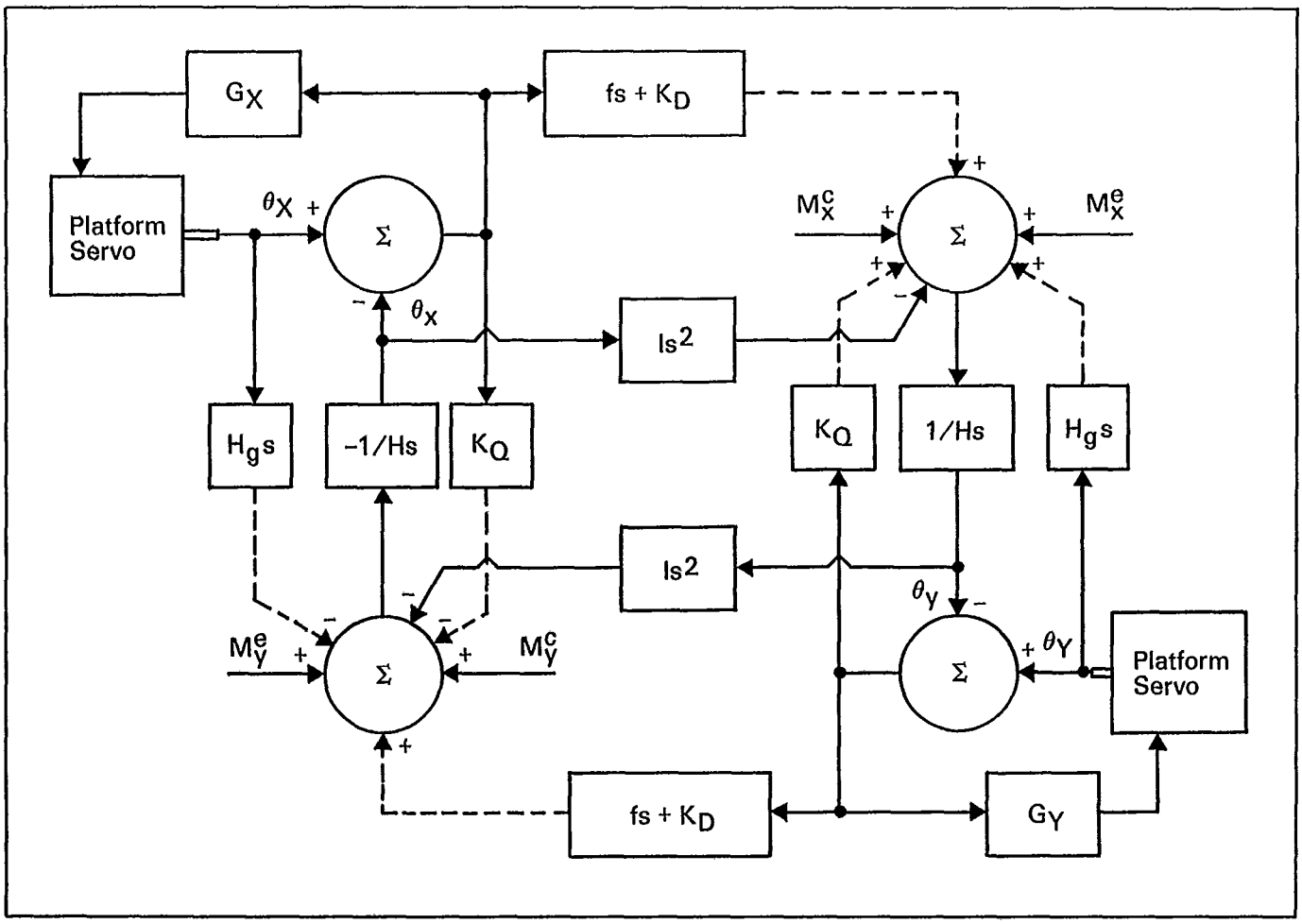

Fig C5
Two-Axis Platform Mode of Operation
Block Diagram

therefore

$$M_x = K_{TX} G_y K_{PY} \left(\theta_Y - \frac{1}{Hs} M_x \right) \qquad \text{(Eq C20)}$$

rewriting as

$$M_x = \left[\frac{K_{TX} G_y K_{PY}}{Hs + K_{TX} G_y K_{PY}} \right] H\dot{\theta}_Y \qquad \text{(Eq C21)}$$

For low frequencies, the term in the brackets is unity and we are left with

$$M_x = H\dot{\theta}_Y \qquad \text{(Eq C22)}$$

Therefore, *within the limitations of the servo amplifiers* the simplified equations may be written as follows:

$$H\dot{\theta}_Y = M_x \qquad \text{(Eq C23)}$$

$$-H\dot{\theta}_X = M_y \qquad \text{(Eq C24)}$$

Note the similarity of Eqs C23 and C24 to Eqs C7 and C8 where now the motion of the case causes the torque on the rotor but *only through the servo amplifiers.* Without the servo amplifiers *there is no torque.*

Finally, the platform mode of operation can be shown in Fig C5.

Here we see that case motion, $\theta_{X,Y}$, causes an error signal to be applied to the appropriate gimbal (platform) servo which causes the gimbal to cancel the initiating angular motion. Error torques, M^e, and command torques, M^c, can cause the rotor to precess which will also cause an error signal to be applied to the appropriate gimbal servos thus *slaving* the platform to the gyro. It should be noted that spring rates, damping, inertia reaction, and effective gimbal angular momentum may have a significant effect in this mode of operation.

Copyright The Institute of Electrical and Electronics Engineers, Inc.
Provided by IHS under license with IEEE
No reproduction or networking permitted without license from IHS
Not for Resale

Acknowledgments

Appreciation is expressed to the following companies and organizations for contributing the time, talent, and resources of their employees to make possible the development of this text:

Applied Motion Technologies, Inc
Applied Technology Associates
Bell Aerospace TEXTRON
Boeing Aerospace Company

Columbia Research Laboratories
Contraves Goerz Corporation
Delco Systems Operations
General Precision Industries
Honeywell, Inc
Jet Propulsion Laboratory
Kearfott Guidance and Navigation Corporation
Litton Guidance and Control Systems Division
Lockheed Missiles and Space Company
Martin-Marietta Corporation
Northrop Corporation Electronics Division
Northrop Corporation Precision Products Division
Rockwell International Corporation
Schaevitz Engineering
Smith Industries
Sperry Marine Inc
Sundstrand Data Control
Systron Donner Corporation
Teledyne Systems Company

United States Air Force

Copyright The Institute of Electrical and Electronics Engineers, Inc.
Provided by IHS under license with IEEE
No reproduction or networking permitted without license from IHS

Not for Resale