IEEE Standards

IEEE Std 765-2002™
(Revision of
IEEE Std 765-1995™)

765™

IEEE Standard for Preferred Power Supply (PPS) for Nuclear Power Generating Stations

IEEE Power Engineering Society

Sponsored by the
Nuclear Power Engineering Committee



Published by
The Institute of Electrical and Electronics Engineers, Inc.
3 Park Avenue, New York, NY 10016-5997, USA

17 May 2002

Print: SH94989
PDF: SS94989

--`,,`-`-`,,`,,`,`,,`---

Copyright The Institute of Electrical and Electronics Engineers, Inc.
Provided by IHS under license with IEEE
No reproduction or networking permitted without license from IHS

Not for Resale

IEEE Std 765-2002™
(Revision of
IEEE Std 765-1995™)

IEEE Standard for Preferred Power Supply (PPS) for Nuclear Power Generating Stations

Sponsor

Nuclear Power Engineering Committee
of the
IEEE Power Engineering Society

Approved 7 February 2002

IEEE-SA Standards Board

Abstract: The design criteria of the preferred power supply (PPS) and its interfaces with the Class 1E power system, switchyard, transmission system, and alternate ac (AAC) source are described. This standard provides PPS requirements for nuclear power plants and guidance in the areas of AAC power source interfaces with PPS, physical independence of the PPS power and control circuits, and expanded PPS criteria for multi-unit stations.
Keywords: AAC, alternate ac source, PPS, preferred power supply, switchyard, transmission system

The Institute of Electrical and Electronics Engineers, Inc.
3 Park Avenue, New York, NY 10016-5997, USA

Copyright © 2002 by the Institute of Electrical and Electronics Engineers, Inc.
All rights reserved. Published 17 May 2002. Printed in the United States of America.

Print: ISBN 0-7381-3259-4 SH94989
PDF: ISBN 0-7381-3260-8 SS94989

No part of this publication may be reproduced in any form, in an electronic retrieval system or otherwise, without the prior written permission of the publisher.

--`,,`,,`-`-`,,`,,`,`,,`---

Copyright The Institute of Electrical and Electronics Engineers, Inc.
Provided by IHS under license with IEEE
No reproduction or networking permitted without license from IHS Not for Resale

IEEE Standards documents are developed within the IEEE Societies and the Standards Coordinating Committees of the IEEE Standards Association (IEEE-SA) Standards Board. The IEEE develops its standards through a consensus development process, approved by the American National Standards Institute, which brings together volunteers representing varied viewpoints and interests to achieve the final product. Volunteers are not necessarily members of the Institute and serve without compensation. While the IEEE administers the process and establishes rules to promote fairness in the consensus development process, the IEEE does not independently evaluate, test, or verify the accuracy of any of the information contained in its standards.

Use of an IEEE Standard is wholly voluntary. The IEEE disclaims liability for any personal injury, property or other damage, of any nature whatsoever, whether special, indirect, consequential, or compensatory, directly or indirectly resulting from the publication, use of, or reliance upon this, or any other IEEE Standard document.

The IEEE does not warrant or represent the accuracy or content of the material contained herein, and expressly disclaims any express or implied warranty, including any implied warranty of merchantability or fitness for a specific purpose, or that the use of the material contained herein is free from patent infringement. IEEE Standards documents are supplied "**AS IS**."

The existence of an IEEE Standard does not imply that there are no other ways to produce, test, measure, purchase, market, or provide other goods and services related to the scope of the IEEE Standard. Furthermore, the viewpoint expressed at the time a standard is approved and issued is subject to change brought about through developments in the state of the art and comments received from users of the standard. Every IEEE Standard is subjected to review at least every five years for revision or reaffirmation. When a document is more than five years old and has not been reaffirmed, it is reasonable to conclude that its contents, although still of some value, do not wholly reflect the present state of the art. Users are cautioned to check to determine that they have the latest edition of any IEEE Standard.

In publishing and making this document available, the IEEE is not suggesting or rendering professional or other services for, or on behalf of, any person or entity. Nor is the IEEE undertaking to perform any duty owed by any other person or entity to another. Any person utilizing this, and any other IEEE Standards document, should rely upon the advice of a competent professional in determining the exercise of reasonable care in any given circumstances.

Interpretations: Occasionally questions may arise regarding the meaning of portions of standards as they relate to specific applications. When the need for interpretations is brought to the attention of IEEE, the Institute will initiate action to prepare appropriate responses. Since IEEE Standards represent a consensus of concerned interests, it is important to ensure that any interpretation has also received the concurrence of a balance of interests. For this reason, IEEE and the members of its societies and Standards Coordinating Committees are not able to provide an instant response to interpretation requests except in those cases where the matter has previously received formal consideration.

Comments for revision of IEEE Standards are welcome from any interested party, regardless of membership affiliation with IEEE. Suggestions for changes in documents should be in the form of a proposed change of text, together with appropriate supporting comments. Comments on standards and requests for interpretations should be addressed to:

Secretary, IEEE-SA Standards Board
445 Hoes Lane
P.O. Box 1331
Piscataway, NJ 08855-1331
USA

Note: Attention is called to the possibility that implementation of this standard may require use of subject matter covered by patent rights. By publication of this standard, no position is taken with respect to the existence or validity of any patent rights in connection therewith. The IEEE shall not be responsible for identifying patents for which a license may be required by an IEEE standard or for conducting inquiries into the legal validity or scope of those patents that are brought to its attention.

The IEEE and its designees are the sole entities that may authorize the use of the IEEE-owned certification marks and/or trademarks to indicate compliance with the materials set forth herein.

Authorization to photocopy portions of any individual standard for internal or personal use is granted by the Institute of Electrical and Electronics Engineers, Inc., provided that the appropriate fee is paid to Copyright Clearance Center. To arrange for payment of licensing fee, please contact Copyright Clearance Center, Customer Service, 222 Rosewood Drive, Danvers, MA 01923 USA; +1 978 750 8400. Permission to photocopy portions of any individual standard for educational classroom use can also be obtained through the Copyright Clearance Center.

Copyright The Institute of Electrical and Electronics Engineers, Inc.
Provided by IHS under license with IEEE
No reproduction or networking permitted without license from IHS
Not for Resale

IEEE-SA Trademark Usage/Compliance Statement

Proper usage of the trademark **IEEE Std 765-2002™** is mandatory and is to be followed in all references of the Standard. The mark **IEEE**® is the registered trademark of the Institute of Electrical and Electronics Engineers, Inc., and must be used in bold type. It is to appear with the registered trademark symbol "®" the first time "**IEEE**" appears in the text. The use of "IEEE Std xxxx-200x" should include the trademark symbol "TM" (e.g., **IEEE Std xxxx-200x™**) at least the first time it is used in text, unless the number of the standard is also trademark registered (e.g., **802**®), then the symbol "®" must be used.

It is not permissible to use the standard number alone or with "**IEEE**" to indicate conformance or compliance with the associated standard. The user of the Standard should contact the Manager, Standards Licensing and Contracts for information concerning issues regarding indicating product compliance with an **IEEE** standard. To represent that a product has been designed to meet an **IEEE** standard, it is permissible to state that "the product has been engineered, designed or manufactured with the intent to meet the requirements of **IEEE Std xxxx-200x™**." However, it is ***not*** permissible to state or refer to a product as "xxxx compliant," "xxxx certified," "**IEEE xxxx** conformant," "**IEEE xxxx** certified," or the like, unless the user has obtained a Certification License from the IEEE.

Copyright © 2002 IEEE. All rights reserved.

Copyright The Institute of Electrical and Electronics Engineers, Inc.
Provided by IHS under license with IEEE
No reproduction or networking permitted without license from IHS
Not for Resale

Introduction

[This introduction is not part of IEEE Std 765-2002™, IEEE Standard for Preferred Power Supply (PPS) for Nuclear Power Generating Stations.]

This standard was originally prepared to provide detailed design criteria for the preferred power supply (PPS) to ensure a design commensurate with its intended function and to provide sufficient detail to interpret, clarify, and expand on guidance given in GDC-17, GDC-18, and IEEE Std 308-1991™.

Title 10, US Code of Federal Regulations, Part 50 (10CFR50), Appendix A, General Design Criteria 17 (GDC-17) for Nuclear Power Plants requires that an off-site electric power system be provided to permit functioning of structures, systems, and components important to safety. In addition, General Design Criteria 18 (GDC-18) provides requirements for inspection and testing of electric power systems.

In 1988 Title 10, Part 50.63 was added to the US Code of Federal Regulations. Part 50.63 requires each lightwater-cooled nuclear power plant to withstand a station blackout for a specific duration and to recover from it. In addition, Part 50.63 defines the requirements for coping with a station blackout by utilizing an alternate ac (AAC) power source.

The Nuclear Utility Management and Resource Council (NUMARC)[1] provided additional guidance in NUMARC 87-00-1988, Guidelines and Technical Bases for NUMARC Initiatives Addressing Station Blackout at Lightwater Reactors. Since NUMARC 87-00 (Revision 1 August 1991) is not available for general public distribution, the guidelines contained therein were considered by the Working Group. The design requirements of AAC are outside the scope of this standard.

This revision of the standard adds an annex that provides guidelines that may be used to preserve the reliability of the Preferred Power Supply in a deregulated environment.

Participants

This standard was prepared by Working Group 4.6 of Subcommittee 4, Auxiliary Power, of the Nuclear Power Engineering Committee. The working group had the following membership at the time this standard was approved.

George Attarian, *Chair*

Farouk Baxter	Harvey C. Leake	James E. Stoner, Jr.
Robert C. Carruth	Gerald L. Nicely	Peter Szabados
Kali S. Hara	Thomas R. Sims	Ray Weronick

[1]The Nuclear Energy Institute (NEI), established in March 1994, incorporates NUMARC.

Copyright © 2002 IEEE. All rights reserved.

Copyright The Institute of Electrical and Electronics Engineers, Inc.
Provided by IHS under license with IEEE
No reproduction or networking permitted without license from IHS
Not for Resale

The following members of the balloting committee voted on this standard. Balloters may have voted for approval, disapproval, or abstention.

Satish K. Agarwal
George Attarian
Vincent P. Bacanskas
Wesley W. Bowers
Mark D. Bowman
Robert C. Carruth
John P. Carter
S. K. Chaudhuri
Guru D. Dhingra
Emery I. Fabri
Julian F. Forster
Luis C. Gonzalez
John K. Greene
Britton P. Grim
Robert E. Hall
Gregory K. Henry
David A. Horvath
John D. MacDonald
Alexander Marion
Gary L. Michel
Burt Nemroff
Gerald L. Nicely
Roger D. Parker
C. A. Petrizzo
Radhakrishna V. Rebbapragada
William G. Schwartz
Thomas R. Sims
James E. Stoner
John Tanaka
John H. Taylor
James E. Thomas
Gary J. Toman
John T. Ullo
John B. Waclo
Paul L. Yanosy
David J. Zaprazny
Mark S. Zar

When the IEEE-SA Standards Board approved this standard on 7 February 2002, it had the following membership:

James T. Carlo, *Chair*
James H. Gurney, *Vice Chair*
Judith Gorman, *Secretary*

Sid Bennett
H. Stephen Berger
Clyde R. Camp
Richard DeBlasio
Harold E. Epstein
Julian Forster*
Howard M. Frazier
Toshio Fukuda
Arnold M. Greenspan
Raymond Hapeman
Donald M. Heirman
Richard H. Hulett
Lowell G. Johnson
Joseph L. Koepfinger*
Peter H. Lips
Nader Mehravari
Daleep C. Mohla
Willaim J. Moylan
Malcolm V. Thaden
Geoffrey O. Thompson
Howard L. Wolfman
Don Wright

*Member Emeritus

Also included is the following nonvoting IEEE-SA Standards Board liaison:

Alan Cookson, *NIST Representative*
Satish K. Aggarwal, *NRC Representative*

Don Messina
IEEE Standards Project Editor

Copyright © 2002 IEEE. All rights reserved.

Copyright The Institute of Electrical and Electronics Engineers, Inc.
Provided by IHS under license with IEEE
No reproduction or networking permitted without license from IHS
Not for Resale

Contents

1. Overview 1

1.1 Scope 1
1.2 Purpose 1

2. References 1

3. Definitions 2

4. General design criteria 3

4.1 General 3
4.2 Safety classification 3
4.3 Function 3
4.4 Capacity and capability 3
4.5 Availability 3
4.6 Independence 6
4.7 Design basis 7

5. Specific design criteria 9

5.1 Transmission system interface 9
5.2 Switchyard interface 10
5.3 Class 1E power system interface 10
5.4 AAC source interface 11

6. Surveillance, control, and test requirements 12

6.1 Surveillance requirements 12
6.2 Control requirements 12
6.3 Test requirements 12

7. Multi-unit considerations 13

7.1 Sharing of PPSs 13
7.2 Shared system capability 13
7.3 Surveillance 13
7.4 Protective systems 13
7.5 Design basis 13
7.6 Shared controls and indication 13

Annex A (informative) Guidelines for Preferred Power Supply Reliability in a Deregulated Environment 14

Copyright © 2002 IEEE. All rights reserved.

Copyright The Institute of Electrical and Electronics Engineers, Inc.
Provided by IHS under license with IEEE
No reproduction or networking permitted without license from IHS
Not for Resale

IEEE Standard for Preferred Power Supply (PPS) for Nuclear Power Generating Stations

1. Overview

This standard has seven clauses and an annex. The first clause defines the scope of this standard, Clause 2 provides references, and Clause 3 provides definitions that are not found in other standards or are essential to the interpretation of the intent of this standard.

The general design criteria of the preferred power supply (PPS) are outlined in Clause 4, and the specific design criteria in Clause 5 describe the interfaces with the transmission system, switchyard, Class 1E power system, and alternate ac (AAC) source. Clause 6 describes the surveillance and test requirements, and Clause 7 describes multi-unit considerations. The informative annex provides guidelines that may be used to preserve the reliabilitiy of the PPS in a deregulated environment.

1.1 Scope

This standard describes the design criteria of the PPS and its interfaces with the Class 1E power system, switchyard, transmission system, and AAC source. Figure 1 is a typical interface diagram of the PPS with related power systems.

1.2 Purpose

This standard provides PPS requirements for nuclear power plants and guidance in the areas of AAC power source interfaces with the PPS, physical independence of the PPS power and control circuits, and expanded PPS criteria for multi-unit stations.

2. References

This standard shall be used in conjunction with the following standards.

IEEE Std 308-1991™, IEEE Standard Criteria for Class 1E Power Systems for Nuclear Power Generating Stations.[1]

IEEE Std 741-1990™, IEEE Standard Criteria for the Protection of Class 1E Power Systems and Equipment in Nuclear Power Generating Stations.

[1]IEEE publications are available from the Institute of Electrical and Electronics Engineers, 445 Hoes Lane, P.O. Box 1331, Piscataway, NJ 08855-1331, USA.

Copyright © 2002 IEEE. All rights reserved.

Copyright The Institute of Electrical and Electronics Engineers, Inc.
Provided by IHS under license with IEEE
No reproduction or networking permitted without license from IHS
Not for Resale

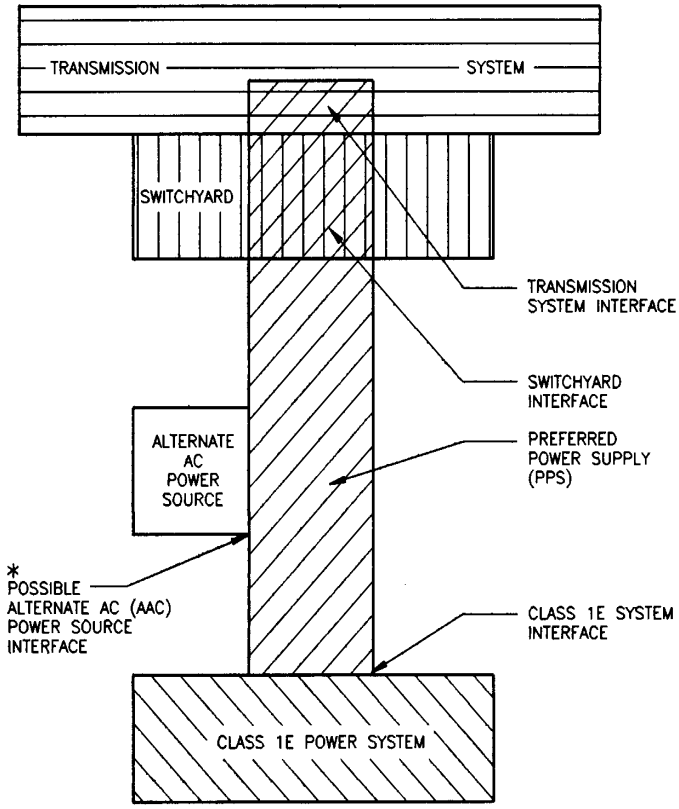

*AAC source interfaces with entities other than the PPS are outside the scope of this standard.

Figure 1—PPS interface diagram

3. Definitions

For the purpose of this standard, the following terms and definitions apply. IEEE 100™, *The Authoritative Dictionary of IEEE Standards Terms,* Seventh Edition, should be referenced for terms not defined in this clause.

3.1 acceptable: Demonstrated to be adequate by the safety analyses of the station.

3.2 alternate ac (AAC) source: An alternating current (ac) power source that is available to and located at or nearby a nuclear power plant that meets the following requirements:

— It can be connected to (but is not normally connected to) the off-site or on-site emergency ac power systems.

— It has minimum potential for common mode failure with off-site power or on-site emergency ac power sources.

— It is available in a timely manner after the onset of a station blackout.

Copyright © 2002 IEEE. All rights reserved.
Copyright The Institute of Electrical and Electronics Engineers, Inc.
Provided by IHS under license with IEEE
No reproduction or networking permitted without license from IHS
Not for Resale

— It has sufficient capacity and reliability to operate all systems required for both coping with a station blackout and for the time needed to bring the plant to and maintain the plant in a safe shutdown (non-design basis accident).

3.3 preferred power supply (PPS): That power supply from the transmission system to the Class 1E distribution system that is preferred to furnish electric power under accident and post-accident conditions.

3.4 station blackout: The complete loss of alternating current (ac) electric power to the essential and nonessential switchgear buses in a nuclear power plant (i.e., loss of off-site electric power system concurrent with turbine trip and unavailability of the on-site emergency ac power system). Station blackout does not include the loss of available ac power to buses fed by station batteries through inverters or by alternate ac sources.

4. General design criteria

4.1 General

The PPS shall consist of two or more circuits from the transmission system to the Class 1E distribution system. Some examples of acceptable arrangements are shown in Figure 2, Figure 3, and Figure 4.

4.2 Safety classification

The PPS is not a Class 1E system. Requirements for redundancy, independence, separation, application of the single-failure criterion, seismic, and equipment qualification, and so on (which are associated with Class 1E installations) do not apply.

4.3 Function

The PPS provides electric power, as required, for the safe shutdown of the station and for the operation of safety systems. The PPS circuits may be used during all modes of operation to supply power to the Class 1E and non-Class 1E buses of the plant.

4.4 Capacity and capability

Each circuit of the PPS shall be designed to provide sufficient capacity and capability to power equipment that is required to ensure the following:

a) Specified acceptable fuel design limits and design conditions of the reactor coolant pressure boundary are not exceeded as a result of anticipated operational occurrences

b) The core is cooled and containment integrity and other vital functions are maintained in the event of plant design basis accidents

Each PPS, when used for normal operation, shall be sized to supply the maximum expected coincident Class 1E and non-Class 1E loads.

4.5 Availability

A minimum of two circuits from the transmission system to the Class 1E power system shall be designed to be available during start-up and normal operation to meet accident, post-accident, and safe shutdown requirements in accordance with the following guidelines:

--`,,`-`-`,,`,,`,`,,`---

Copyright © 2002 IEEE. All rights reserved.

Copyright The Institute of Electrical and Electronics Engineers, Inc.
Provided by IHS under license with IEEE
No reproduction or networking permitted without license from IHS Not for Resale

a) The two circuits may be connected by way of the non-Class 1E distribution system to the redundant Class 1E bus as shown in Figure 2 and Figure 3.

b) The non-Class 1E connections should not compromise the PPS independence requirements.

c) Direct connection of the two circuits to each redundant Class 1E bus as shown in Figure 4 may further improve availability.

d) A minimum of one PPS circuit shall be designed to be available automatically to provide power to the Class 1E buses within a few seconds following a design basis accident. A second PPS circuit shall be designed to be available within a time period demonstrated to be adequate by the safety analysis of the station.

e) An improved design should have two PPS circuits automatically available to provide preferred power to Class 1E buses within a few seconds following a design basis accident.

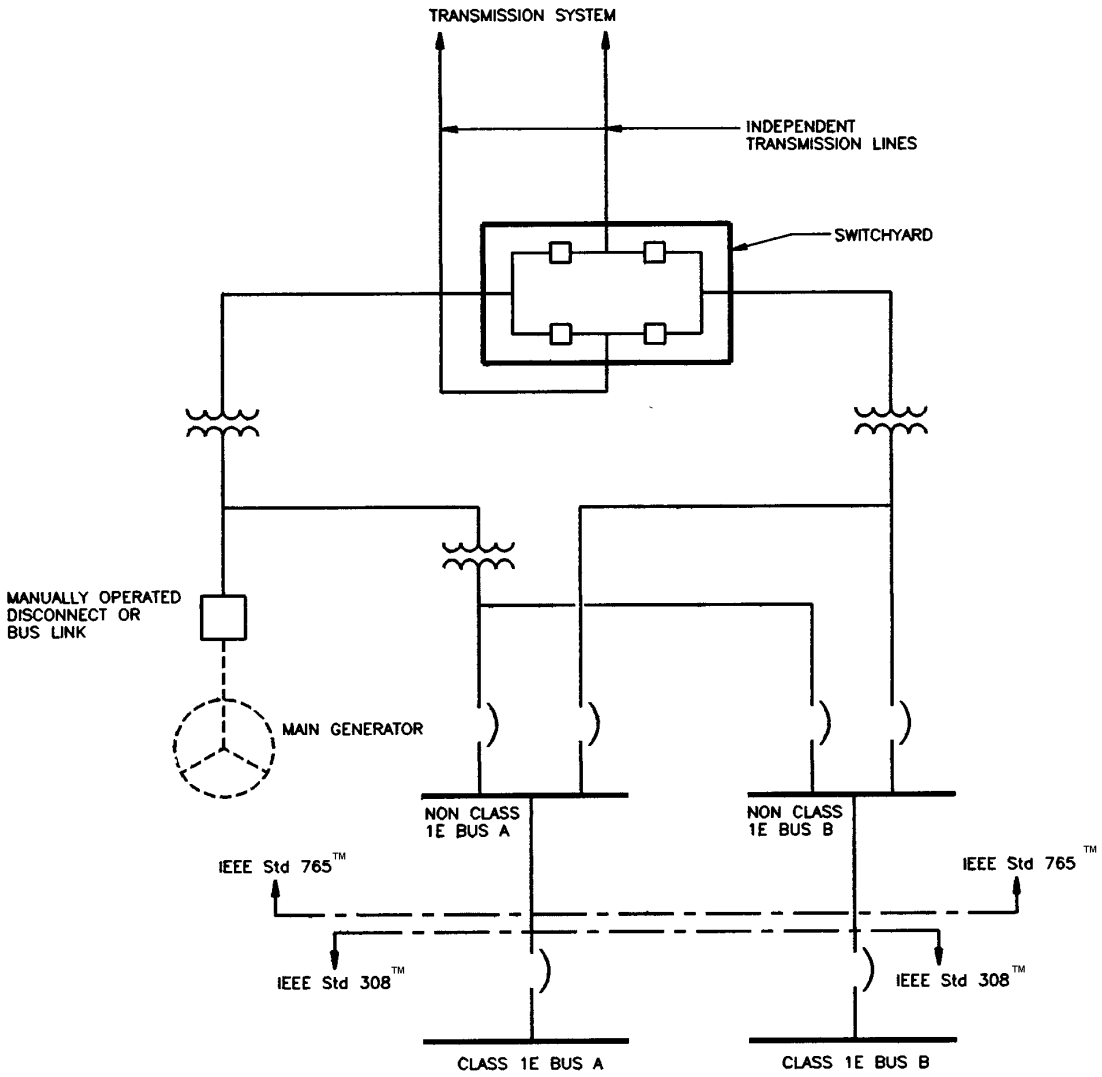

Figure 2—An example of an acceptable PPS design

Copyright © 2002 IEEE. All rights reserved.
Copyright The Institute of Electrical and Electronics Engineers, Inc.
Provided by IHS under license with IEEE
No reproduction or networking permitted without license from IHS
Not for Resale

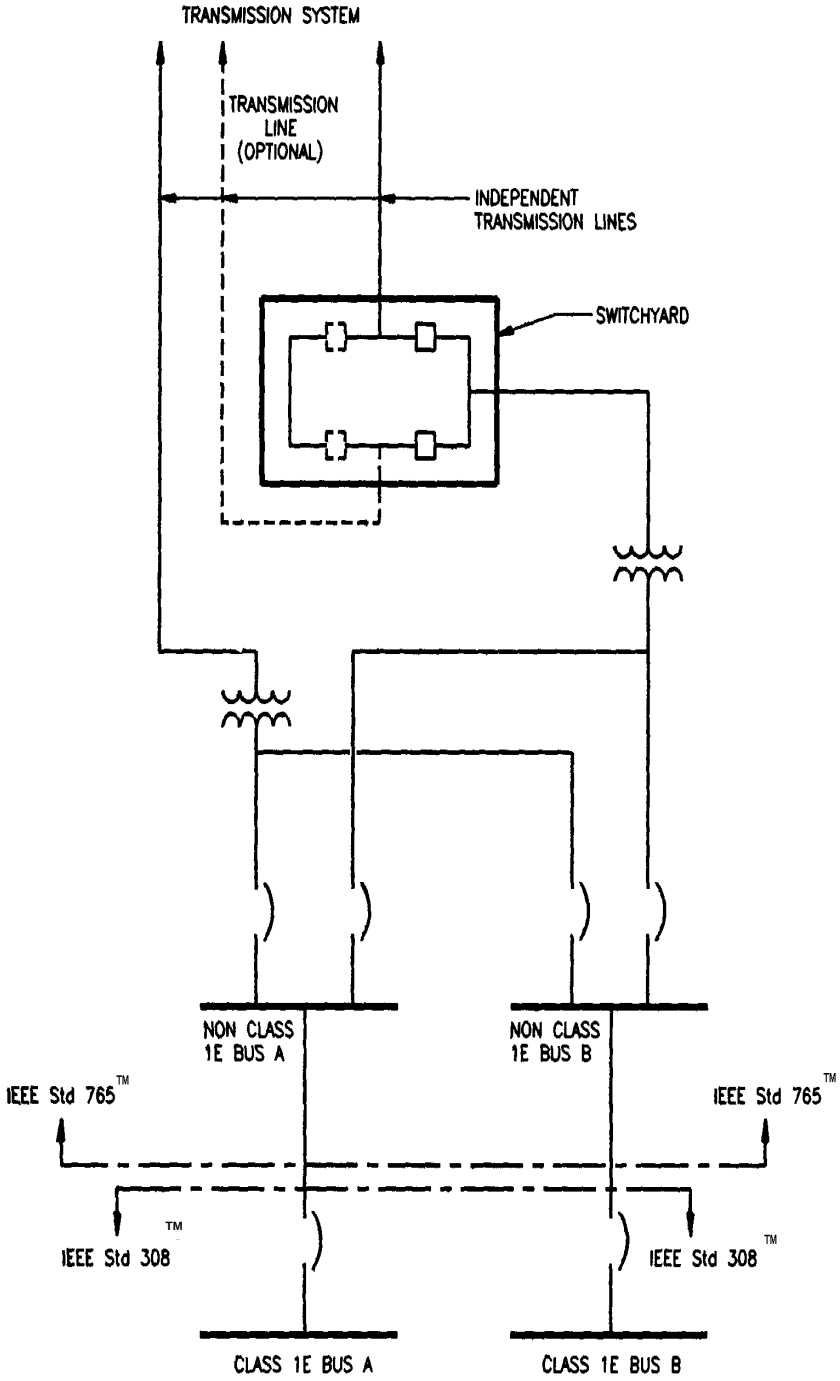

Figure 3—A second example of an acceptable PPS design

Copyright © 2002 IEEE. All rights reserved.

Copyright The Institute of Electrical and Electronics Engineers, Inc.
Provided by IHS under license with IEEE
No reproduction or networking permitted without license from IHS
Not for Resale

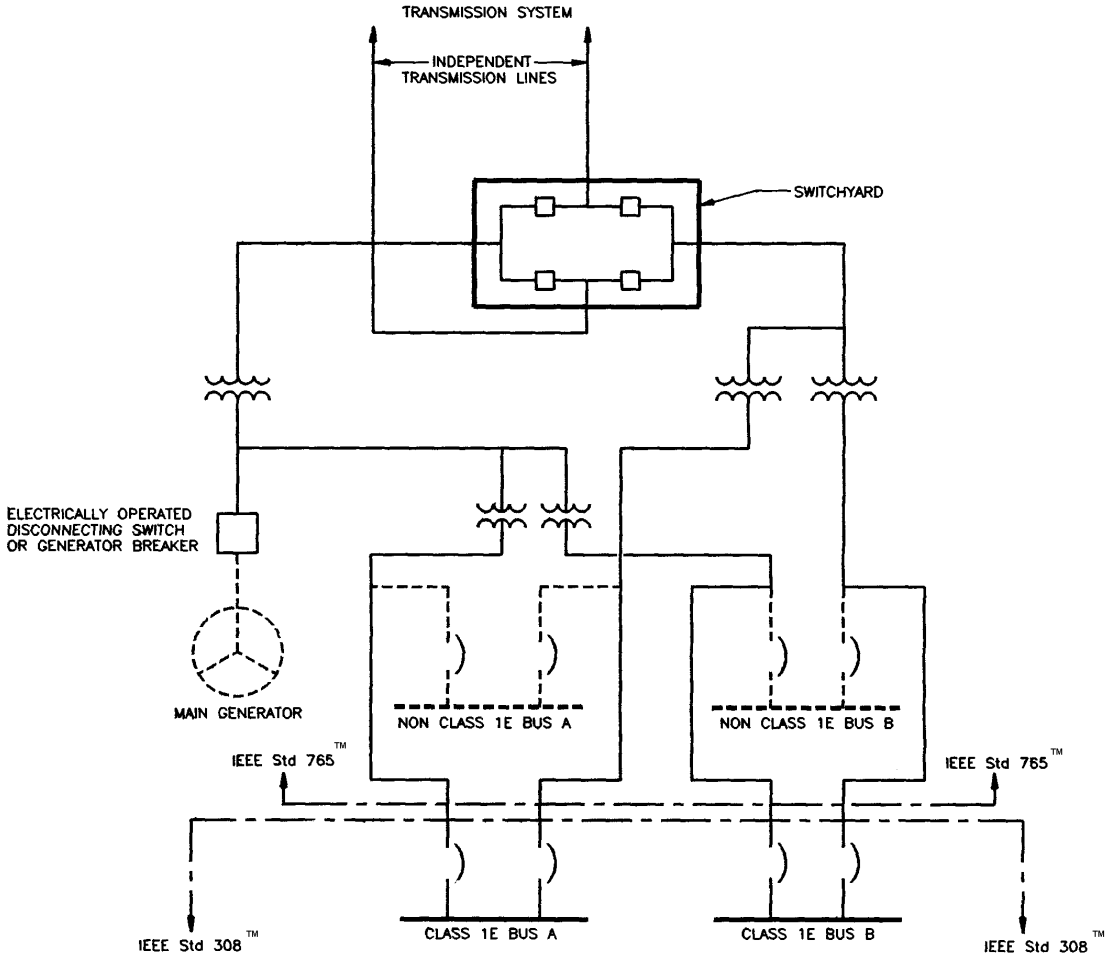

Figure 4—Example of an enhanced PPS design

4.6 Independence

4.6.1

The PPS circuits to the Class 1E power system shall be physically independent, designed, and located to minimize (to the extent practical) the likelihood of simultaneous failure of both PPS circuits under operating, postulated accident, and environmental conditions.

Copyright © 2002 IEEE. All rights reserved.
Copyright The Institute of Electrical and Electronics Engineers, Inc.
Provided by IHS under license with IEEE
No reproduction or networking permitted without license from IHS
Not for Resale

4.6.2

To reduce the likelihood of simultaneous failure of both PPS circuits, the PPS control circuits shall be physically independent from each other and from the PPS power circuits to the extent practical.

4.6.3

If a common takeoff structure is used for both PPS circuits, analysis shall be performed to confirm that the reliability of the common takeoff structure is not lower than the overall reliability of the balance of the PPS circuits.

4.7 Design basis

A specific design basis shall be provided for the PPS system for each nuclear power generating station. The design basis shall include as a minimum the requirements of the following subclauses.

4.7.1

The design basis shall include station electric loads and systems that use the services of PPS during start-up, normal operation, safe shutdown, accident, and post-accident operation, including the required switching sequences and duration period of energization.

4.7.2

The design basis shall include environmental conditions to which the PPS may be subjected during operations. Examples of environmental conditions that may be considered are any of the following:

a) Wind
b) Lightning
c) Ice
d) Temperature variations
e) Snow
f) Flood

4.7.3

The design basis shall include station design basis events and operating incidents that could cause degradation of the PPS. Examples of operating incidents that may be considered are any of the following:

a) Equipment maintenance outage
b) Fire
c) Effects of water
d) Equipment failure

4.7.4

The design basis shall include identification of transmission system, steady-state, and transient conditions to which the PPS may be subjected when required to perform. Examples that may be considered are any of the following:

a) Switching and lightning surges
b) Voltage ranges—maximum and minimum—for heavy and light load conditions
c) Frequency variation
d) Stability limits

Copyright © 2002 IEEE. All rights reserved.

Copyright The Institute of Electrical and Electronics Engineers, Inc.
Provided by IHS under license with IEEE
No reproduction or networking permitted without license from IHS Not for Resale

4.7.5

The design basis shall include required performance and operating characteristics of PPS equipment. Examples that may be considered are any of the following:

a) Short-circuit withstand capability
b) Equipment capacity
c) Voltage and frequency transient response
d) Voltage regulation limits
e) Step load capability
f) Coordination of protective relaying
g) Grounding

4.7.6

The design basis shall include the degree of independence and redundance within the PPS. Examples that may considered are any of the following:

a) Tower and right-of-way separation
b) Direct current (dc) systems
c) Control and protection circuits
d) Raceway routing
e) Switchyard arrangement

4.7.7

The design basis shall include details of interfaces of the PPS with the switchyard, transmission system, Class 1E power systems, and AAC power source.

4.7.8

The design basis shall include the capability of periodic testing. Examples that may be considered are the following:

a) Testing of protective relays
b) Operation tests on breakers
c) Testing of transfer schemes

4.7.9

The design basis shall include the use of PPS circuits for applications other than safe shutdown, accident, and post-accident conditions.

4.7.10

The design basis shall include a restoration methodology for realignment of the PPS following the loss of offsite power.

Copyright © 2002 IEEE. All rights reserved.
Copyright The Institute of Electrical and Electronics Engineers, Inc.
Provided by IHS under license with IEEE
No reproduction or networking permitted without license from IHS
Not for Resale

5. Specific design criteria

5.1 Transmission system interface

5.1.1 Description

The transmission system interface shall consist of a minimum of two transmission lines not necessarily on separate right-of-ways.

Where there are more than two lines available from the transmission system, any combination of two lines may be used as PPS circuits, provided the requirements of this standard are met.

5.1.2 Reliability

The PPS transmission system reliability shall be determined using analytical or modeling techniques to ensure that availability requirements are met with future planned transmission and generation facilities considered.

5.1.3 Independence

5.1.3.1

The two lines from the transmission system, which provide the PPS to the Class 1E distribution system, shall be designed to minimize their simultaneous loss as a result of the failure of any transmission tower or failure from crossing transmission lines.

5.1.3.2

The PPS circuits originating from the transmission system shall be designed to minimize their simultaneous failure as a result of the failure of a single breaker, switchyard bus, switchgear bus, or cable.

5.1.4 System studies

5.1.4.1

System studies shall be performed to demonstrate that the PPS is not degraded below a level consistent with the availability goals of the plant as a result of contingencies such as any of the following:

a) Loss of the nuclear power generating unit
b) Loss of the largest generating unit
c) Loss of the largest transmission circuit or intertie
d) Loss of the largest load

5.1.4.2

System studies shall be reviewed periodically for transmission, generation, and system load changes to ensure that the design basis of the PPS remains valid for all reasonably expected system conditions.

--`,,-`-`,,`,,`,`,,`---
Copyright © 2002 IEEE. All rights reserved.

Copyright The Institute of Electrical and Electronics Engineers, Inc.
Provided by IHS under license with IEEE
No reproduction or networking permitted without license from IHS
Not for Resale

5.2 Switchyard interface

5.2.1 Description

Electrical equipment and structures required for the interface of the transmission circuit of the PPS with the Class 1E system (see Figure 1) shall be designed to the criteria set forth in this standard. The balance of the switchyard used for other functions is not subject to these criteria.

5.2.2 Independence

The physical design of the switchyard should minimize the probability of a single incidence of equipment failure causing the simultaneous or subsequent loss of both PPS circuits.

5.2.3 Electrical faults

The switchyard equipment shall be designed to withstand stresses from the worst-case faults.

5.2.4 Protective systems

Protective systems shall be provided to minimize the probability of loss of the PPS. The following design features are suggested for guidance:

a) Primary and backup relay systems
b) Breaker failure relaying
c) Dual battery systems
d) Dual breaker trip coils

5.3 Class 1E power system interface

5.3.1 Description

A minimum of two PPS circuits shall be provided to the Class 1E power system.

5.3.2 Independence

Each PPS circuit may be utilized to supply both redundant Class 1E buses, as shown in Figure 2, Figure 3, and Figure 4.

5.3.3 Connections with Class 1E systems

5.3.3.1

The connection between the preferred power supply and the Class 1E power systems shall be made at the input terminals of the Class 1E circuit breaker. (The class 1E circuit breaker is located in safety class structures in accordance with IEEE Std 308-1991™.) [2]

[2]Information about references can be found in Clause 2.

Copyright © 2002 IEEE. All rights reserved.
Copyright The Institute of Electrical and Electronics Engineers, Inc.
Provided by IHS under license with IEEE
No reproduction or networking permitted without license from IHS
Not for Resale

5.3.3.2

When transfer schemes are used, operation of the Class 1E breakers (Figure 4) or non-Class 1E breakers (Figure 2 and Figure 3) to transfer from one PPS source to another may be accomplished by use of the following:

a) Manual transfer schemes
b) Automatic live-bus transfer
c) Automatic dead-bus transfer

Where automatic bus transfers are used, the adequacy of the transfer schemes shall be demonstrated.

5.3.3.3

Exposure to an increase in available fault current in excess of equipment rating is permitted during bus transfers when two power sources are momentarily connected in parallel to a Class 1E bus.

5.3.4 PPS voltage degradation

5.3.4.1

PPS voltage degradation shall be detectable at the Class 1E bus to which the PPS source is connected.

5.3.4.2

Selection of degraded voltage and time delay setpoints shall be in accordance with IEEE Std 741-1990™.

5.3.4.3

A PPS voltage degradation condition shall be alarmed in the control room.

5.3.4.4

On sensing PPS degradation to an unacceptable low-voltage condition, the affected PPS circuits shall be automatically from the Class 1E buses.

5.4 AAC source interface

The AAC source may interface with the PPS. This interface shall

a) Be maintained electrically open except when needed to provide its intended function or during testing.
b) Avoid vulnerability to a likely weather-related event or to single active failure that could render both the AAC power source and the PPS inoperable. As an example, a switchyard common to both the AAC source and the PPS would be considered such a single-point vulnerability.
c) Minimize degradation to the availability of the PPS.

Copyright © 2002 IEEE. All rights reserved.

Copyright The Institute of Electrical and Electronics Engineers, Inc.
Provided by IHS under license with IEEE
No reproduction or networking permitted without license from IHS Not for Resale

6. Surveillance, control, and test requirements

6.1 Surveillance requirements

6.1.1

Status indication (open-close) of PPS circuit-interrupting devices shall be provided in the main control room.

6.1.2

Undervoltage alarms shall be provided in the main control room for the dc systems associated with the PPS circuit-interrupting devices.

6.1.3

An alarm to sense voltage degradation, as required in 5.3.4, shall be provided in the main control room.

6.1.4

Indication of the PPS voltage and frequency shall be provided in the main control room.

6.2 Control requirements

Control of all circuit-interrupting devices connecting the PPS to the station auxiliary buses shall be provided in the main control room.

6.3 Test requirements

6.3.1 Preoperational system tests

The preoperational system tests shall be performed with all components installed. These tests shall demonstrate that the equipment and system are operational. The following requirements shall be demonstrated:

a) All required Class 1E and non-Class 1E loads can be powered from their designated PPS.
b) The loss of the PPS can be detected.
c) Transfers between PPSs can be accomplished.
d) The batteries and chargers associated with the PPS can meet the requirements of their design loads.

6.3.2 Periodic equipment tests

Periodic tests shall be performed to the extent practical to detect the deterioration of equipment toward an unacceptable condition.

6.3.3 Periodic systems tests

The system tests referred to in the preoperational system tests (see 6.3.1) shall also be performed at scheduled intervals.

Copyright © 2002 IEEE. All rights reserved.
Copyright The Institute of Electrical and Electronics Engineers, Inc.
Provided by IHS under license with IEEE
No reproduction or networking permitted without license from IHS
Not for Resale

7. Multi-unit considerations

7.1 Sharing of PPSs

At a multi-unit station, the PPS may be shared between two or more units.

7.2 Shared system capability

PPS circuits that are shared among units shall be capable of simultaneously supplying all loads required for each design mode of operation of the units.

7.3 Surveillance

Status indication of the shared PPS circuit-interrupting devices shall be located in the main control room of each unit that is sharing these facilities.

7.4 Protective systems

Protective systems shall be provided to minimize (to the extent practical) the probability of loss of the shared PPS. Protective systems shall be designed to minimize the impact of events in one unit on the other unit(s).

7.5 Design basis

The design basis shall specifically address the degree of independence of the PPSs of each unit. The design basis should address shared major equipment, the impact of their loss on each unit, interactions among units, and expected operational occurrences and disturbances on each unit.

7.6 Shared controls and indication

The capability to monitor the availability of the PPS in the control room of each unit shall be provided. The ability to disconnect one unit from its PPS shall not affect the PPS availability to the other unit(s). When the PPS is disconnected from the transmission system, indication shall be provided at the control board of each unit. If controls are located at multiple points, interlocks shall be provided to ensure that the control action will be from only one location at any given time, with appropriate indications as to which location has access to control.

Copyright © 2002 IEEE. All rights reserved.

Copyright The Institute of Electrical and Electronics Engineers, Inc.
Provided by IHS under license with IEEE
No reproduction or networking permitted without license from IHS
Not for Resale

Annex A

(informative)

Guidelines for Preferred Power System Reliability in a Deregulated Environment

A.1 Purpose

As the electric utility industry moves toward deregulation, the reliability of the preferred power system to a nuclear power generating station must be maintained. The purpose of this annex, as a natural extension of this standard, is to identify the design bases and other interface requirements that should be considered and acknowledged between a nuclear power generating station and Independent System Operators (ISOs) or other organizations not corporately aligned with the utility. The licensing bases for each nuclear power generating station determines the specific functional requirements and limits of the preferred power system with respect to the nuclear facility. This annex does not try to establish specific criteria, but rather identifies areas in a suggested format that need to be considered in the preservation of the reliability of the preferred power system in a deregulated environment.

A.2 Discussion

The need for a reliable preferred power system, with the capacity and capability to function in support of a nuclear power generating station, requires the close cooperation and interface of the utility's transmission, system planning, and nuclear organizations. In a regulated environment, this cooperation is facilitated by inerface documents, procedures, and a common management structure. In a deregulated environment, organizations that are required to operate and maintain the grid and preferred power system may be independent from the nuclear power generating station and operate on an independent, commercial platform. The interface between the nuclear power generating station and these organizations may become a matter of contract rather than procedure. It is, therefore, in the nuclear power generating station's best interests to identify specifically the requirements of the preferred power system that must be maintained by an ISO or other organization to support the licensing and design basis of the nuclear facility. Furthermore, in order for a nuclear power generating station to operate, it must meet its Technical Specifications. This demands that clear and unambiguous requirements exist between the nuclear power generating station and the preferred power provider.

A.3 Preferred Power System Interface

The following, in a suggested format, provides the structure of an agreement document and the suggested contents to ensure that all parties understand their responsibilities in the design, maintenance, and operation of the off-site power system. The requirements presented in the body of this standard, if not specifically cited below, should be considered together with the nuclear power generating station's unique licensing/design basis requirements.

a) Introduction and general overview

   In this section a discussion should be presented that identifies the need for the document and key areas within the document. Regulatory committments may be identified and discussed. System configuration, operational philosophy, and general programs and procedures that govern may also be discussed here.

Copyright © 2002 IEEE. All rights reserved.
Copyright The Institute of Electrical and Electronics Engineers, Inc.
Provided by IHS under license with IEEE
No reproduction or networking permitted without license from IHS
Not for Resale

b) Responsibilities

In this section, organizations should be identified along with their responsibilities and lines of communication and interface required to ensure a reliable preferred power system. As an example, if it is required that an organization maintain the analysis that determines minimum and maximum voltages, that organization should be identified in this section. Clear boundaries of responsibility and policy should also be defined, such as the distinction between maintenance and design activities, vehicle access, communication, and so on.

c) Design and operating requirements

In this section, specific requirements such as the following should be specified:

1) The number of transmission circuits required to be in service for normal, startup, shutdown, and accident conditions

2) The MW and MVAR demand of the nuclear power generating station on the PPS for normal, startup, and accident scenarios

3) The minimum and maximum voltage needed to support the nuclear power generating station during startup, shutdown, and accident scenarios

4) Identification of operational and initiating events that cannot compromise the requirements of the preferred power system, i.e., those contingencies listed in 5.1.4.1

5) Switchyard normal voltage schedule

6) Minimum and maximum MW and MVAR generation limits

7) Grid frequency and stability operating limits

8) Nuclear power generating station unique requirements such as independence, environmental factors, and single failure criteria

9) Required actions if a specified condition cannot be maintained

10) Required actions for prompt restoration of power in the event of loss of all preferred power to the nuclear power generating station

11) Any surveillance requirements needed to maintain the operability of the preferred power system that are analytically derived (e.g., predicted post-trip voltage) and/or monitored by organizations (e.g., ISO or RTO) other than the nuclear power generating station

d) Maintenance Requirements

In this section, clear boundaries of the various organizations responsible for ensuring that the preferred power system facilities are maintained and specific equipment required to be maintained by those organizations are identified, such as the following:

1) High voltage circuit breakers

2) Main, unit, and startup transformers and autotransformers, including spares

3) Switchyard bus conductors, insulators, surge arrestors, and supporting equipment

--`,,`-`-`,,`,,`,`,,`---

Copyright © 2002 IEEE. All rights reserved.

Copyright The Institute of Electrical and Electronics Engineers, Inc.
Provided by IHS under license with IEEE
No reproduction or networking permitted without license from IHS Not for Resale

4) Potential devices

5) Line traps and coupling capacitors

6) Grounding equipment

7) Generator, transformer, and system relaying

8) Monitoring systems

9) Metering equipment

10) Switchyard batteries and chargers

11) Fire protection systems

12) Other equipment unique to the nuclear power generating station

13) Shunt reactors, capacitors, etc.

14) Periodic testing

e) Switching requirements

In this section the requirements and responsibilities for switching of high-voltage equipment in the nuclear power generating station switchyard/transformer yard should be described. These include:

1) Clearly defined operational control boundaries of responsibility for switching and equipment clearance/lockout activities. For example, the generator output breakers (including manual disconnects), the breakers feeding the startup/reserve auxiliary transformer(s), and all equipment on the nuclear power generating station side of these devices are controlled by the nuclear power generating station operations personnel. All equipment on the grid side of these devices are controlled by the system operations personnel.

2) Provisions to establish equipment clearances across this operational control boundary, when necessary, with any given clearace being unquestionably controlled by only one organization (systems operation or nuclear power generating station operations). For example, a high-voltage bus clearance would generally be controlled by system operations. However, the clearance might require tagging and lockout of the generator output breakers that are normally controlled by the nuclear power generating station operations. Provisions might be made to allow system operations to control these breakers for the specific purpose of the needed bus clearance.

3) A process for requesting prearranged equipment clearances that allow each organization to review and approve the switching activities, scheduling, and sequence of events for equipment clearances.

4) Procedures that require prior notification for any switching activities in the nuclear power generating station switchyard/transformer yard, pre-job briefings immmediately before commencing switching to review the risks involved, and close communications throughout the switching evolution.

5) Training, procedures, or other means to ensure that common terms and equipment nomenclatures are used by both system operations and nuclear power generating station operations personnel.

Procedures that establish any special considerations for communications needs during adverse or severe weather events or other emergencies when emergency facilities might be activated. For example, alternate communications means, etc.

--`,,-`-`,,`,,`,`,,`---

Copyright © 2002 IEEE. All rights reserved.
Copyright The Institute of Electrical and Electronics Engineers, Inc.
Provided by IHS under license with IEEE
No reproduction or networking permitted without license from IHS
Not for Resale