IEEE Std 741-1997(R2002)
(Revision of IEEE Std 741-1990)

IEEE Standard Criteria for the Protection of Class 1E Power Systems and Equipment in Nuclear Power Generating Stations

Sponsored by

IEEE Nuclear Power Engineering Committee
of the
IEEE Power Engineering Society

Reaffirmed 12 June 2002
Approved 26 June 1997

IEEE Standards Board

The Institute of Electrical and Electronics Engineers, Inc.
345 East 47th Street, New York, NY 10017-2394, USA

Copyright ' 1997 by the Institute of Electrical and Electronics Engineers, Inc.
All rights reserved. Published 1997. Printed in the United States of America.

ISBN 1-55937-942-1

No part of this publication may be reproduced in any form, in an electronic retrieval system or otherwise, without the prior written permission of the publisher.

--`,,`-`-`,,`,,`,`,,`---

Copyright The Institute of Electrical and Electronics Engineers, Inc.
Provided by IHS under license with IEEE
No reproduction or networking permitted without license from IHS

Not for Resale

IEEE Standards documents are developed within the IEEE Societies and the Standards Coordinating Committees of the IEEE Standards Board. Members of the committees serve voluntarily and without compensation. They are not necessarily members of the Institute. The standards developed within IEEE represent a consensus of the broad expertise on the subject within the Institute as well as those activities outside of IEEE that have expressed an interest in participating in the development of the standard.

Use of an IEEE Standard is wholly voluntary. The existence of an IEEE Standard does not imply that there are no other ways to produce, test, measure, purchase, market, or provide other goods and services related to the scope of the IEEE Standard. Furthermore, the viewpoint expressed at the time a standard is approved and issued is subject to change brought about through developments in the state of the art and comments received from users of the standard. Every IEEE Standard is subjected to review at least every five years for revision or reaffirmation. When a document is more than five years old and has not been reaffirmed, it is reasonable to conclude that its contents, although still of some value, do not wholly reflect the present state of the art. Users are cautioned to check to determine that they have the latest edition of any IEEE Standard.

Comments for revision of IEEE Standards are welcome from any interested party, regardless of membership affiliation with IEEE. Suggestions for changes in documents should be in the form of a proposed change of text, together with appropriate supporting comments.

Interpretations: Occasionally questions may arise regarding the meaning of portions of standards as they relate to specific applications. When the need for interpretations is brought to the attention of IEEE, the Institute will initiate action to prepare appropriate responses. Since IEEE Standards represent a consensus of all concerned interests, it is important to ensure that any interpretation has also received the concurrence of a balance of interests. For this reason, IEEE and the members of its societies and Standards Coordinating Committees are not able to provide an instant response to interpretation requests except in those cases where the matter has previously received formal consideration.

Comments on standards and requests for interpretations should be addressed to:

Secretary, IEEE Standards Board
445 Hoes Lane
P.O. Box 1331
Piscataway, NJ 08855-1331
USA

Note: Attention is called to the possibility that implementation of this standard may require use of subject matter covered by patent rights. By publication of this standard, no position is taken with respect to the existence or validity of any patent rights in connection therewith. The IEEE shall not be responsible for identifying patents for which a license may be required by an IEEE standard or for conducting inquiries into the legal validity or scope of those patents that are brought to its attention.

Authorization to photocopy portions of any individual standard for internal or personal use is granted by the Institute of Electrical and Electronics Engineers, Inc., provided that the appropriate fee is paid to Copyright Clearance Center. To arrange for payment of licensing fee, please contact Copyright Clearance Center, Customer Service, 222 Rosewood Drive, Danvers, MA 01923 USA; (508) 750-8400. Permission to photocopy portions of any individual standard for educational classroom use can also be obtained through the Copyright Clearance Center.

Copyright The Institute of Electrical and Electronics Engineers, Inc.
Provided by IHS under license with IEEE
No reproduction or networking permitted without license from IHS
Not for Resale

Introduction

(This introduction is not part of IEEE Std 741-1997, IEEE Standard Criteria for the Protection of Class 1E Power Systems and Equipment in Nuclear Power Generating Stations.)

The IEEE has developed this standard to provide the principal design criteria, design features, and testing requirements for the protection of Class 1E power systems and equipment supplied from those systems. It is of particular use in identifying the need for special protection features where the requirements of nuclear power generating stations necessitate supplementing accepted industry practices.

Wherever possible, the standard identifies other standards or documents that provide more explicit guidance for specific protection requirements. By definition, the protection shall be adequate to sense and to determine the presence of an unacceptable condition, and to execute the operations required in order to limit degradation effects. In this role, the standard pays special attention to the requirements for design verification documentation to support the protection performance.

This standard addresses the electrical penetration assemblies installed as part of the containment structure that may require special considerations for protection. Also included are the criteria used to establish the necessity for special considerations and the resulting protection requirements.

This revision of the standard provides additional information in the following areas:

a) Degraded voltage protection;
b) Overload protection for valve actuator motor circuits;
c) Protection concerns associated with auxiliary system automatic bus transfer;
d) The use of high-speed magnetic circuit breakers for special applications.

At the time this standard was completed, Working Group SC4.7 had the following membership:

John D. Kueck, *Chair*

George Attarian	Harvey C. Leake	Thomas R. Sims
William J. Boyer	Gerald L. Nicely	James E. Stoner, Jr.
John Chiloyan	Harold Sharma	Narinder Trehan

The following persons were on the balloting committee:

Satish K. Aggarwal	Rich E. Dulski	James T. Keiper
Vincent P. Bacanskas	Surinder Dureja	Alex Marion
Farouk D. Baxter	Jay Forster	John R. Matras
Wes W. Bowers	J. R. Fragola	R. B. Miller
Dan F. Brosnan	John M. Gallagher	Burt Nemroff
Nissen M. Burstein	Wil C. Gangloff	Neil P. Smith
S. P. Carfagno	Luis C. Gonzalez	Peter B. Stevens
Robert C. Carruth	Lawrence P. Gradin	Peter Szabados
Raymond J. Christensen	J. K. Greene	James E. Thomas
Robert L. Copyak	Britton P. Grim	Raymond Weronick
J. J. Disosway	Robert E. Hall	G. O. Wilkinson
Gary L. Doman	Joe T. Hazeltine	David J. Zaprazny
Edward F. Dowling	Gregory K. Henry	Mark S. Zar
	Sonny Kasturi	

Copyright The Institute of Electrical and Electronics Engineers, Inc.
Provided by IHS under license with IEEE
No reproduction or networking permitted without license from IHS
Not for Resale

When the IEEE Standards Board approved this standard on 26 June 1997, it had the following membership:

Donald C. Loughry, *Chair* **Richard J. Holleman,** *Vice Chair*

Andrew G. Salem, *Secretary*

Clyde R. Camp
Stephen L. Diamond
Harold E. Epstein
Donald C. Fleckenstein
Jay Forster*
Thomas F. Garrity
Donald N. Heirman
Jim Isaak
Ben C. Johnson
Lowell Johnson
Robert Kennelly
E. G. "Al" Kiener
Joseph L. Koepfinger*
Stephen R. Lambert
Lawrence V. McCall
L. Bruce McClung
Marco W. Migliaro
Louis-François Pau
Gerald H. Peterson
John W. Pope
Jose R. Ramos
Ronald H. Reimer
Ingo Rüsch
John S. Ryan
Chee Kiow Tan
Howard L. Wolfman

*Member Emeritus

Also included are the following nonvoting IEEE Standards Board liaisons:

Satish K. Aggarwal
Alan H. Cookson

Lisa S. Young
IEEE Standards Project Editor

--`,,`-`-`,,`,,`,`,,`---

Copyright The Institute of Electrical and Electronics Engineers, Inc.
Provided by IHS under license with IEEE
No reproduction or networking permitted without license from IHS
Not for Resale

Contents

CLAUSE PAGE

1. Overview 1

2. References 1

3. Definitions 3

4. General design criteria 3

5. Principal design criteria and requirements 4

5.1 AC power distribution systems 4
5.2 DC power system 6
5.3 Instrumentation and control power system 6
5.4 Primary containment electrical penetration assemblies 7
5.5 Valve actuator motors (direct gear driven) 7

6. Testing and surveillance 8

6.1 Device testing 8
6.2 Preoperational tests 8
6.3 Surveillance 9

ANNEX

Annex A (informative) Illustration of concepts associated with degraded voltage protection 10

Annex B (informative) Guidelines for selection of overload protection for valve actuator motor circuits 14

Annex C (informative) Auxiliary system automatic bus transfer—protection concerns 35

Annex D (informative) Use of high-speed magnetic circuit breakers for special applications 42

Copyright The Institute of Electrical and Electronics Engineers, Inc.
Provided by IHS under license with IEEE
No reproduction or networking permitted without license from IHS
Not for Resale

IEEE Standard Criteria for the Protection of Class 1E Power Systems and Equipment in Nuclear Power Generating Stations

1. Scope

This standard prescribes criteria that establish protection requirements for Class 1E power systems and equipment. It describes the purpose of and the means for obtaining protection from electrical and mechanical damage, or failures that can occur within a time period that is shorter than that required for operator action. It includes testing and surveillance requirements. It does not include plant physical design requirements to protect against events such as pipe whip, fire, dropped load, etc.

2. References

This standard shall be used in conjunction with the following publications. When the following standards are superseded by an approved revision, the revision shall apply.

ANSI/ISA S67.04 Part 1-1994, Setpoints for Nuclear Safety-Related Instrumentation.[1]

IEEE Std 141-1993, IEEE Recommended Practice for Electric Power Distribution for Industrial Plants (ANSI).[2]

IEEE Std 142-1991, IEEE Recommended Practice for Grounding of Industrial and Commercial Power Systems (ANSI).

IEEE Std 242-1986 (Reaff 1991), IEEE Recommended Practice for Protection and Coordination of Industrial and Commercial Power Systems (ANSI).

[1]ANSI/ISA publications are available from the Sales Department, American National Standards Institute, 11 West 42nd Street, 13th Floor, New York, NY 10036, USA.

[2]IEEE publications are available from the Institute of Electrical and Electronics Engineers, 445 Hoes Lane, Piscataway, NJ 08855-1331, USA.

Copyright The Institute of Electrical and Electronics Engineers, Inc.
Provided by IHS under license with IEEE
No reproduction or networking permitted without license from IHS
Not for Resale

IEEE Std 308-1991, IEEE Standard Criteria for Class 1E Power Systems for Nuclear Power Generating Stations (ANSI).

IEEE Std 317-1983 (Reaff 1996), IEEE Standard for Electric Penetration Assemblies in Containment Structures for Nuclear Power Generating Stations (ANSI).

IEEE Std 336-1985 (Reaff 1991), IEEE Standard Installation, Inspection, and Testing Requirements for Power, Instrumentation, and Control Equipment at Nuclear Facilities (ANSI).

IEEE Std 338-1987 (Reaff 1993), IEEE Standard Criteria for the Periodic Surveillance Testing of Nuclear Power Generating Station Safety Systems (ANSI).

IEEE Std 384-1992, IEEE Standard Criteria for Independence of Class 1E Equipment and Circuits (ANSI).

IEEE Std 415-1986 (Reaff 1992), IEEE Guide for Planning of Preoperational Testing Programs for Class 1E Power Systems for Nuclear Power Generating Stations (ANSI).

IEEE Std 446-1995, IEEE Recommended Practice for Emergency and Standby Power Systems for Industrial and Commercial Applications (ANSI).

IEEE Std 487-1992, IEEE Recommended Practice for the Protection of Wire-Line Communication Facilities Serving Electric Power Stations (ANSI).

IEEE Std 518-1982 (Reaff 1996), IEEE Guide for the Installation of Electrical Equipment to Minimize Electrical Noise Inputs to Controllers from External Sources (ANSI).

IEEE Std 603-1991, IEEE Standard Criteria for Digital Computers in Safety Systems for Nuclear Power Generating Stations (ANSI).

IEEE Std 666-1991 (Reaff 1996), IEEE Design Guide for Electric Power Service Systems for Generating Stations (ANSI).

IEEE Std 765-1995, IEEE Standard for Preferred Power Supply (PPS) for Nuclear Power Generating Stations (ANSI).

IEEE Std 944-1986 (Reaff 1996), IEEE Recommended Practice for the Application and Testing of Uninterruptible Power Supplies for Power Generating Stations (ANSI).

IEEE Std 946-1992, IEEE Recommended Practice for the Design of DC Auxiliary Power Systems for Generating Stations (ANSI).

IEEE Std C37.91-1985 (Reaff 1990), IEEE Guide for Protective Relay Applications to Power Transformers (ANSI).

IEEE Std C37.96-1988, IEEE Guide for AC Motor Protection.[3]

IEEE Std C62.2-1989 (Reaff 1994), IEEE Guide for Application of Gapped Silicon-Carbide Surge Arresters for Alternating Current Systems (ANSI).

IEEE Std C62.41-1991 (Reaff 1995), IEEE Recommended Practice for Surge Voltages in Low-Voltage AC Power Circuits (ANSI).

IEEE Std C62.45-1992, IEEE Guide on Surge Testing for Equipment Connected to Low-Voltage AC Power Circuits (ANSI).

---

[3]IEEE Std C37.96-1988 has been withdrawn; however, copies can be obtained from Global Engineering, 15 Inverness Way East, Englewood, CO 80112-5704, USA, tel. (303) 792-2181.

Copyright The Institute of Electrical and Electronics Engineers, Inc.
Provided by IHS under license with IEEE
No reproduction or networking permitted without license from IHS Not for Resale

IEEE Std C62.92.3-1993, IEEE Guide for the Application of Neutral Grounding in Electrical Utility Systems, Part III—Generator Auxiliary Systems (ANSI).

NEMA ICS 2-1993, Industrial Control and Systems: Controllers, Contactors, and Overload Relays, Rated Not More than 2000 Volts AC or 750 Volts DC.[4]

3. Definitions

3.1 degraded voltage condition: A voltage deviation, above or below normal, to a level that, if sustained, could result in unacceptable performance of, or damage to, the connected loads and/or their control circuitry.

3.2 loss of voltage condition: A voltage reduction to a level that results in the immediate loss of equipment capability to perform an intended function.

3.3 pump runout: A pump flow condition in which the pump is operating beyond its design point due to a reduction in the system head. As a result, the pump motor's brake-horsepower and full load current demand may be increased.

3.4 service factor (general-purpose alternating-current motor): A multiplier that, when applied to the rated power, indicates a permissible power loading that may be carried under the conditions specified for the service factor.

4. General design criteria

As used in this standard, protection refers to the sense, command, and execute features with their associated interconnections (see IEEE Std 603-1991)[5] that are provided to minimize equipment damage and any interruption of electrical service resulting from mechanical or electrical failures or other unacceptable conditions. Protection includes equipment required to support the Class 1E power system in the performance of its safety function, and components whose function is to increase the availability and reliability of the safety-related equipment. The protection shall be capable of the following:

a) Preventing failures in safety systems and equipment from disabling safety functions to below an acceptable level. The protective actions of each load group shall be independent of the protective actions provided by redundant load groups (see IEEE Std 308-1991).

b) Operating the required devices upon detection of unacceptable conditions to reduce the severity and extent of electrical system disturbances, equipment damage, and potential personnel and property hazards.

c) Monitoring the connected preferred power supply and, where an alternate preferred power supply is provided by the design, of automatically initiating a transfer or alerting the operator to manually transfer to the preferred alternate power supply.

d) Providing indication and identification of the protective operations.

e) Periodic testing to verify logic schemes and protective functions.

f) Being designed in such a way that the availability of protection control power is monitored.

g) Periodic testing to verify setpoints. This requirement is not applicable to fuses.

[4]NEMA publications are available from the National Electrical Manufacturers Association, 1300 N. 17th St., Ste. 1847, Rosslyn, VA 22209, USA.

[5]For information on references, see Clause 2.

Copyright The Institute of Electrical and Electronics Engineers, Inc.
Provided by IHS under license with IEEE
No reproduction or networking permitted without license from IHS
Not for Resale

Those parts of the protection that have a safety function shall meet the requirements of IEEE Std 603-1991 and IEEE Std 308-1991. Documentation requirements for the protection of Class 1E power systems and equipment are found in IEEE Std 308-1991. Those parts of the protection whose function is nonsafety related shall be designed such that their failure does not degrade the Class 1E power system below an acceptable level.

5. Principal design criteria and requirements

5.1 AC power distribution systems

5.1.1 Switchgear and bus protection

For recommended practices in application of overcurrent relays, directional relays, differential relays for bus protection, and ground fault relaying, refer to IEEE Std 141-1993, IEEE Std 242-1986, and IEEE Std 666-1991. The protection systems for the ac distribution system should be coordinated in accordance with IEEE Std 242-1986. For supplementary information on ground protection practices, refer to IEEE Std 142-1991.

If the power distribution system design cannot accommodate paralleling of bus supplies, or if paralleling can be allowed only under certain conditions, interlocks or procedural restrictions shall be provided to restrict such paralleling. Consideration shall be given to the higher fault current that may exist during parallel operation when selecting protective devices.

If the power distribution design allows for automatic bus transfers, consideration should be given to the impact of the bus transfer on the coordination of protection devices (see Annex C).

5.1.2 Bus voltage monitoring schemes

Bus voltage monitoring schemes that are used for disconnecting the preferred power source, load shedding, and starting the standby power sources are part of the protection and shall meet the criteria that follow. Voltage monitoring schemes that are used only for alarms do not have to meet these criteria.

a) Bus voltage shall be detected directly from the Class 1E bus to which the standby power source is connected.

b) Upon sensing preferred power supply degradation, the condition shall be alarmed in the main control room. On sensing preferred power supply degradation to an unacceptable low voltage condition, the affected preferred power supply shall be automatically disconnected from the Class 1E buses.

c) Each division shall have an independent scheme of detection of degraded voltage and loss of voltage conditions. Within each division, common equipment may be used for the detection of both conditions (see Annex A).

d) Each scheme shall monitor all three phases. The protection system design shall be such that a blown fuse in the voltage transformer circuit or other single phasing condition will not cause incorrect operation, nor prevent correct operation, of the scheme. Means shall be provided to detect and identify these failures.

e) The design shall minimize unwanted operation of the standby power sources and disconnection of the preferred power supply. The use of coincident logic and time delay to override transient conditions is a way to accomplish this.

f) Capability for test and calibration during power operation shall be provided.

Copyright The Institute of Electrical and Electronics Engineers, Inc.
Provided by IHS under license with IEEE
No reproduction or networking permitted without license from IHS Not for Resale

g) The selection of undervoltage and time delay setpoints shall be determined from an analysis of the voltage requirements of the Class 1E loads at all on-site distribution levels (see Annex A).

h) Indication shall be provided in the control room for any bypass incorporated in the design.

5.1.3 Feeder circuits

For recommended practice on motor protection, refer to IEEE Std C37.96-1988, IEEE Std 242-1986, and IEEE Std 666-1991. See 5.5 for additional requirements associated with valve actuator motors. The feeder circuit protection should consider any expected operating conditions of the motor that may require electrical system demands above the motor's nameplate rating such as the following:

a) Motor service factor;
b) Pump runout conditions;
c) Operation at other than rated voltage.

For recommended practice on power transformer protection, refer to IEEE Std C37.91-1985 and IEEE Std 666-1991. For recommended practice on feeder circuit to power distribution panel protection, refer to IEEE Std 141-1993 and IEEE Std 242-1986. For criteria for isolation and separation of non-Class 1E circuits from Class 1E circuits, refer to IEEE Std 384-1992.

For use of high-speed magnetic circuit breakers in special applications, refer to Annex D.

5.1.4 Standby power supply protection

For diesel generator protection recommended practice, refer to IEEE Std 242-1986.

In the manual control mode, synchronizing interlocks should be provided to prevent incorrect synchronization whenever a standby power source is required to operate in parallel with the preferred power supply.

When a standby power supply is being operated in parallel with the preferred power supply, protection shall be provided to separate the two supplies if either becomes degraded to an unacceptable level. This protection shall not lockout or prevent the availability of the power supply that is not degraded.

5.1.5 Load shedding and sequential loading

An automatic load shedding and sequential loading scheme may be included to ensure that the preferred or standby power sources can be loaded while maintaining voltage and frequency within acceptable limits.

The Class 1E bus load shedding scheme should automatically prevent shedding during sequencing of the emergency loads to the bus when connected to the standby power source.

If the preferred or standby power source breaker is tripped during or subsequent to loading, the load shedding and sequential loading scheme shall be arranged to be automatically reset to perform its function in the event that the loads are to be reapplied.

5.1.6 Surge protection

For surge protection of equipment and systems, refer to IEEE Std 141-1993 and IEEE Std 242-1986. For surge protection of induction motors, refer to IEEE Std C37.96-1988. For guidance on protection of wire line facilities used for protective relaying and data transfer circuits, refer to IEEE Std 487-1992.

Copyright The Institute of Electrical and Electronics Engineers, Inc.
Provided by IHS under license with IEEE
No reproduction or networking permitted without license from IHS
Not for Resale

For recommendations in design and installation of low-energy, low-voltage signal circuits associated with solid-state electronic equipment, refer to IEEE Std 518-1982.

Surge protection shall be provided to protect the shunt field of dc valve actuator motors. This surge protection may take the form of a resistor in the motor control center-wired in parallel with the shunt field to provide a discharge path for the shunt field's inductive voltage surges.

For guidance in the application of surge arresters to all types of power circuits and equipment, refer to IEEE Std C62.2-1987. Refer to IEEE Std C62.41-1991 for guidance in determining the surge voltage for low-voltage equipment, and to IEEE Std C62.45-1992 to provide guidance for tests that should be used to determine the surge withstand capability of the equipment used on low-voltage circuits.

5.2 DC power system

For recommended practice on protection for batteries, refer to IEEE Std 946-1992.

The dc power distribution system should be provided with coordinated protection. Coordination for dc power system circuits should include the main bus protective devices and the protective devices used in branch circuits, in switchgear control circuits, and in relay and process control panels. Care shall be taken to use appropriate correction factors or dc trip characteristic curves for protection devices.

For criteria for isolation and separation of non-Class 1E circuits from Class 1E circuits, refer to IEEE Std 384-1992.

Ground detection monitoring shall be provided for ungrounded systems.

Battery chargers shall be provided with current limiting features or overload protection, reverse current protection, output undervoltage, and overvoltage alarms and/or trips. For additional guidance on the protection of battery chargers, refer to IEEE Std 446-1987.

5.3 Instrumentation and control power system

For guidance on protection for inverters, refer to IEEE Std 446-1987. For information on ground protection practices, refer to IEEE Std 142-1991 and IEEE Std C62.92.3-1993. For criteria for isolation and separation of non-Class 1E circuits from Class 1E circuits, refer to IEEE Std 384-1992

Where a rectifier-type power supply is used as a source for an inverter, it shall be provided with reverse current protection, current-limiting features or overload protection, and output undervoltage and overvoltage protection.

The instrumentation and control power distribution system should be provided with coordinated protection. Since inverters and motor generator sets are sources of limited short-circuit current, special attention must be given to integrating protective device sensitivity and system available fault current. Coordination should include the protective devices in the alternate supply, inverters, static switches, distribution panels, instrumentation panels and racks, and other equipment powered from the system.

Where an instrumentation and control power bus is supplied by an inverter with current limiting characteristics and an automatic transfer has been provided to an alternate source with higher available current, this alternate source may be used in order to achieve the coordinated protection described above.

Ground detection monitoring shall be provided for ungrounded systems.

Copyright The Institute of Electrical and Electronics Engineers, Inc.
Provided by IHS under license with IEEE
No reproduction or networking permitted without license from IHS Not for Resale

The instrumentation and control power system should be provided with undervoltage, overvoltage, and underfrequency protection. Where its power is supplied from a static inverter, overfrequency protection should also be provided. For recommended practice on alarms and indication, refer to IEEE Std 944-1986.

5.4 Primary containment electrical penetration assemblies

An electrical penetration assembly shall be considered as part of the cable system between the load and the primary interrupting device. For guidance in the application of electrical circuit protection, refer to IEEE Std 242-1986, which includes information also applicable to electrical penetrations. Short-circuit, overload, and continuous current ratings and capabilities of the electrical penetration are defined in IEEE Std 317-1983.

The electrical penetration assemblies installed as part of the containment structure may require special consideration in the selection of their protection. This special consideration arises where the potential exists for a fault inside containment to result in a penetration seal failure, such that a breach of containment may occur. Where a penetration assembly can indefinitely withstand the maximum current available due to a fault inside containment, no special consideration is required.

Electrical penetrations requiring special consideration (i.e., where protection is required to ensure containment integrity) shall be provided with dual primary protection operating separate interrupting devices, or primary and backup protection operating separate interrupting devices.

The time-current curves of the dual primary protection or the primary and backup protection shall coordinate with the time-current capability curve of the electrical penetration to be protected.

Protection for non-Class 1E circuits using containment penetration assemblies do not need to be treated as Class 1E. The protection for these non-Class 1E circuits is acceptably provided by the requirements specified in the paragraphs above.[6] For protection circuits requiring special consideration, the surveillance requirements of 6.3 shall apply.

5.5 Valve actuator motors (direct gear driven)

The selection of a protective device for the direct geared valve actuator motor shall ensure that the time current characteristic of the protective device is coordinated with the time current characteristic of the motor, as derived from motor time temperature data. In addition, the coordination shall ensure the allowable duty cycle of the valve (see Annex B) is completed without compromising the motor thermal withstand capability, while allowing margin for variations in current drawn by the motor, or in the thermal characteristics of the protective device, or both. Refer to Annex B for guidelines for selection of the protective devices. The criteria for setting mechanical devices within the valve actuator, such as torque and limit switches, are not within the scope of this standard.

The protective device(s) shall be selected to prevent the following:

a) Motor overheating due to locked-rotor conditions;
b) Motor overheating due to anticipated overloads;
c) Nuisance trips during acceleration;
d) Nuisance trips due to anticipated overloads;
e) Nuisance trips during operation within the duty cycle of the valve.

[6]Designs that use dual protection for penetration circuits provide adequate assurance that the protection will function acceptably under all plant conditions. Since the plant design basis is that a seismic event will not cause a loss-of-coolant accident (LOCA) or high energy line break (HELB) inside containment, seismic qualification of protective devices for non-Class 1E circuits that penetrate the containment is not required.

Copyright The Institute of Electrical and Electronics Engineers, Inc.
Provided by IHS under license with IEEE
No reproduction or networking permitted without license from IHS
Not for Resale

To protect the motor during locked-rotor conditions, the protective device maximum trip time shall not exceed the allowable safe locked-rotor time, and the minimum trip time shall not be less than the acceleration time (typically less than 1 s).

Protective devices shall be coordinated with the motor allowable operating time corresponding to nominal torque and anticipated overloads. Typical anticipated valve overloads fall in the range of 150–300% of the valve actuator motor nominal torque, depending on the actuator type and application.

Short-circuit protection shall be provided for the valve actuator motor. If the device for short-circuit protection contains an overload element, this element shall be coordinated with the valve actuator motor thermal overload device.

The following shall also be considered in the derivation and coordination of the protective device setpoints:

a) Tolerance (accuracy) of the protective device;
b) The effect of ambient temperature;
c) The effect of motor terminal operating voltage extremes.

Valve actuator motor current values shall be obtained from the valve actuator manufacturer at nominal torque, selected overload torque (150–300% of nominal torque), and locked-rotor torque. The current values shall be measured at nominal voltage and either measured or calculated for anticipated voltages at the terminals of the motor. These current values shall be considered in the final selection of the overload protection device.

6. Testing and surveillance

6.1 Device testing

All testing of voltage transformers, current transformers, relays, fuses, trip elements, and other devices shall be in accordance with accepted industry practice for the device being tested. For acceptable testing practices, refer to IEEE Std 141-1993. Refer to IEEE Std 336-1985 (Reaff 1991) and IEEE Std 338-1987 (Reaff 1993) for construction and periodic test requirements.

Where overload heater elements are used, they shall be tested in accordance with NEMA ICS 2-1993.

6.2 Preoperational tests

A program shall be established to assure that preoperational testing will demonstrate the satisfactory performance of the protection. For planning of a preoperational testing program, refer to IEEE Std 415-1986.

Requirements for initial preoperational testing will also apply after major modification or repair to the protection. The program shall include checks, verification, tests, and reports to demonstrate that the following are true:

a) There is proper operation according to system design;
b) The protection will meet requirements relating to voltage, frequency, current, power, and other limits;
c) That where redundant power or control systems are installed, the failure or loss of one system will not prevent correct operation of the redundant system;
d) The failure of a non-Class 1E power or control system will not adversely affect the correct functioning of the protection for Class 1E equipment;
e) The specified requirements for the operating environment are not violated. These requirements may include cleanliness, temperature, humidity, and vibration.

Copyright The Institute of Electrical and Electronics Engineers, Inc.
Provided by IHS under license with IEEE
No reproduction or networking permitted without license from IHS Not for Resale

6.3 Surveillance

For surveillance methods to demonstrate equipment operational status, refer to IEEE Std 308-1991. For periodic test requirements pertaining to those parts of the protection that perform a safety function, refer to IEEE Std 338-1987.

The protection shall be designed to permit periodic testing to provide assurance that the protection can perform its function. This standard does not address the periodic testing of actuated electrical equipment.

Periodic tests should duplicate as closely as practicable the performance requirements of the actuation devices. Acceptable methods for periodic testing include the following:

a) Testing of each protection circuit from sensor through actuated equipment.

b) Testing part of each protection circuit and actuation device individually or in previously selected groups. In this instance, overlap requirements should establish an acceptable basis for combining individual or group test results.

c) Testing each electrical actuation circuit individually if the actuated equipment has more than one actuation device.

During periodic protection device testing, where the ability of the safety system to respond to an accident signal has been made inoperative, the following shall apply:

a) The inoperative condition shall be indicated in the main control room;
b) Means shall be provided to prevent any expansion of the inoperative condition to redundant systems.

--`,,`-`-`,,`,,`,`,,`---

Copyright The Institute of Electrical and Electronics Engineers, Inc.
Provided by IHS under license with IEEE
No reproduction or networking permitted without license from IHS Not for Resale

Annex A

(informative)

Illustration of concepts associated with degraded voltage protection

A.1 Purpose

This annex provides considerations for the following:

a) Protection of Class 1E equipment for loss of voltage or degraded voltage conditions;
b) Determination of the proper settings for loss of voltage and degraded voltage protection systems and their associated time delays.

The annex also provides a description of a protection scheme utilizing solid-state undervoltage relays that will meet these requirements, including considerations for determination of the relay voltage setpoints and their associated time delays. However, it is recognized, because of the diversity of nuclear plant auxiliary system designs, that there are other protection schemes that will provide the desired level of protection. Also, this annex does not address the capability of various relay types, but rather discusses the philosophy behind the desired actuation times and voltage levels. Figure A.1 depicts the significant parameters associated with degraded voltage protection. For each voltage and time delay relay, the figure shows some of the applicable criteria used to determine the setpoints along with the relay tolerance bandwidth.

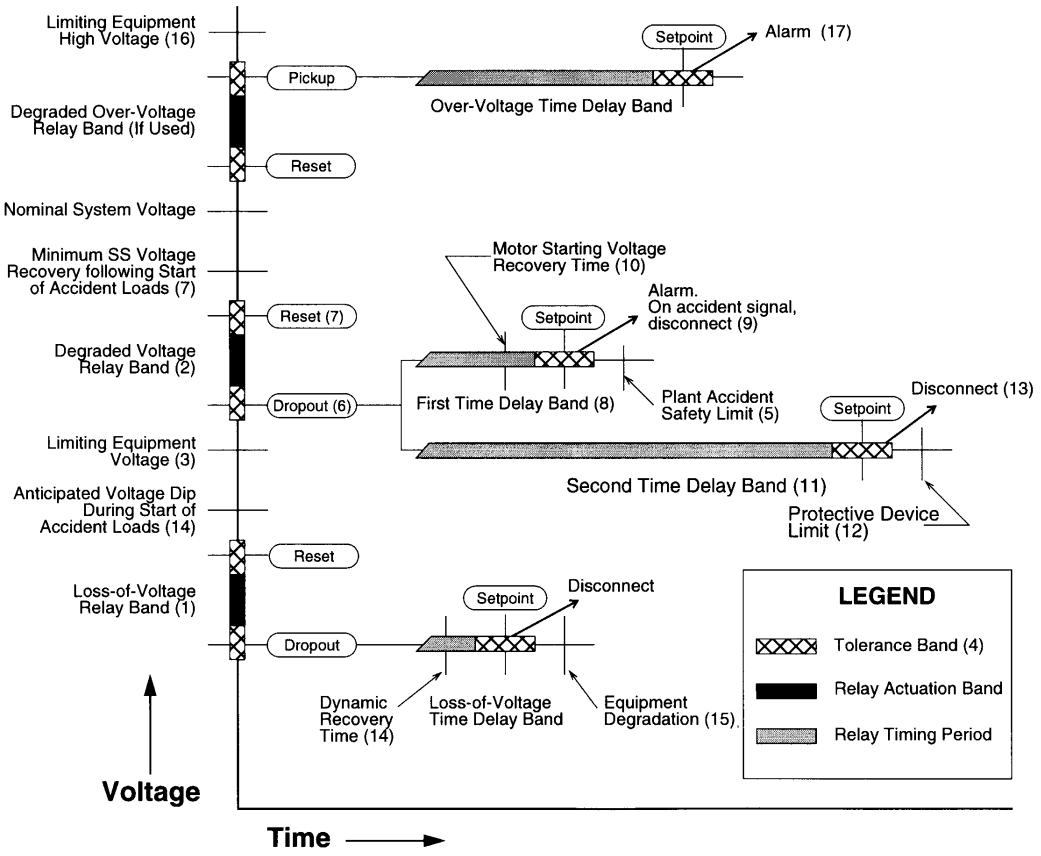

Figure A.1—Degraded voltage protection parameters

Copyright The Institute of Electrical and Electronics Engineers, Inc.
Provided by IHS under license with IEEE
No reproduction or networking permitted without license from IHS
Not for Resale

A.2 Discussion

It is recommended that two levels of undervoltage detection and protection be provided on the Class 1E electrical distribution system. The first level of undervoltage protection is provided by the loss of voltage relays whose function is to detect and disconnect the Class 1E buses from the preferred power supply upon a total loss of voltage (1).[1] The second level of undervoltage protection is provided by the degraded voltage relays that are set to detect a low-voltage condition (2). These relays alarm to alert the operators to the degraded condition and disconnect the Class 1E buses from the preferred power supply if the degraded voltage condition exists for a time interval that could prevent the Class 1E equipment from achieving its safety function or from sustaining damage (3) due to prolonged operation at reduced voltage (2). The combination of the loss of voltage relaying system and degraded voltage relaying system provides protection for the Class 1E distribution system for conditions of voltage collapse or sustained voltage degradation.

Determining the setpoint for degraded voltage relays usually requires a detailed analytical basis because the setpoint value is the result of a balance between preventing damage to Class 1E equipment and unavailability of Class 1E equipment. This must be achieved in a manner that avoids nuisance trips of the relay and resultant starts of the diesel generators due to an overly conservative setpoint.

Undervoltage conditions can be caused by equipment failure, concurrent motor starting, or bus transfers, in addition to low voltage on the preferred power supply. The setpoint calculations for degraded voltage relays should assure that the limiting equipment voltage requirements of the Class 1E system are met.

A.3 Degraded voltage relay voltage settings

The basis for the settings for the degraded and loss of voltage relaying systems should be supported by the following analyses that:

a) Calculate the minimum voltages at Class 1E buses for various operating and accident loading conditions;

b) Determine the terminal voltages at the bounding components during worst case loading conditions so that they may be compared to minimum equipment voltage requirements;

c) Account for tolerances as discussed in A.8 (4).

These analyses should also consider optimization of system voltage levels by appropriate adjustment of the fixed voltage tap settings of transformers, and for each applicable connection to the preferred power supply. Additionally, analyses may consider the effects of voltage compensating equipment, such as automatic load tap changing transformers and automatic switched capacitor banks, including their associated time delays, to ensure bus voltage recovery following expected voltage transients.

The capability to start motors, transfer buses, and ride through other momentary voltage dips must be evaluated. This evaluation should be performed at or below the lowest expected preferred power supply voltage. If analysis determines that the bus voltage drops into the degraded voltage relay operating range (6) during a momentary voltage dip, the voltage must recover above the reset value (7) within the time delay period.

[1]The numbers in parentheses refer to corresponding points on Figure A.1.

--`,,`-`-`,,`,,`,`,,`---

Copyright The Institute of Electrical and Electronics Engineers, Inc.
Provided by IHS under license with IEEE
No reproduction or networking permitted without license from IHS
Not for Resale

A.4 Degraded voltage relay time delay settings

After the voltage setpoint for the degraded voltage relays has been established, additional analysis is required to determine the appropriate time delays. These analyses will involve investigation of transient conditions, such as block motor starting and the effect of increased load currents from degraded voltage operation, on both protective device operation and equipment thermal damage. Two time delays should be determined.

a) The first time delay should be of a duration that establishes the existence of a sustained degraded voltage condition (i.e., longer than a motor starting transient) (8). Following this delay, an alarm in the control room should alert the operator to the degraded condition. The subsequent occurrence of an accident signal should immediately separate the Class 1E distribution system from the preferred power supply (9).

   In some cases, the voltage may be acceptable, but if an accident were to occur, the starting of large motors could cause the degraded voltage relays to begin timing. In this event, the time delay must be long enough to ride through the starting of accident loads without separating from the preferred power supply (10).

   The time delay must not be so long that the system timing assumptions identified in the plant safety analyses are not met in the event there is a continued degradation of the preferred power supply (5).

b) The second time delay (11) should be of a limited duration such that the permanently connected Class 1E loads will not be damaged or become unavailable due to protective device actuation (12). Following this delay, if the operator has failed to restore adequate voltages, the Class 1E distribution system should be disconnected (13) from the preferred power supply. Protective devices (i.e., circuit breakers, control fuses, etc.) for connected Class 1E loads should be evaluated to ensure that spurious tripping will not occur during this time delay period. Consideration should also be given for restarting/reaccelerating the loads, should transfer to the alternate or standby power source be required [A1].[2]

A.5 Loss of voltage relay settings

The loss of voltage relays are an integral part of the undervoltage protection scheme, and their settings should be selected to limit the magnitude and duration of an undervoltage condition on the Class 1E buses. The function provided by these relays is to prevent equipment degradation (15) by disconnecting the Class 1E buses from the preferred power supply in the event of collapsing or total loss of voltage. Voltage and time delay analyses should be performed to ensure that nuisance trips of the relays will not occur from anticipated dynamic effects such as motor starting or transmission system transients such as faults and switching (14).

A.6 High voltage conditions

Although degraded voltage is generally considered as an undervoltage condition, it also applies to a condition of unacceptably high voltage that can lead to equipment insulation damage or misoperation such as excessive motor shaft torque (16). The Class 1E system should be analyzed to determine the effects of high voltage. Rather than using design basis accident loadings, minimum unit loads such as those that may occur during cold shutdown or refueling modes may be appropriate in conjunction with maximum expected system voltage conditions.

In an overvoltage condition, an alarm is generally adequate, without automatic tripping, because such a condition would be expected to only cause gradual component loss of component life (17).

[2]The number in brackets preceded by the letter A corresponds to the bibliographical item listed in A.9.

Copyright The Institute of Electrical and Electronics Engineers, Inc.
Provided by IHS under license with IEEE
No reproduction or networking permitted without license from IHS Not for Resale

A.7 Off-Site system voltage considerations

It is important that acceptable transmission system voltages be determined so that, in the event of an accident, there will be assurance that the design basis loads can be supported without actuating the degraded voltage relays. Analyses should apply to each applicable off-site power supply configuration.

The required off-site voltage should consider transient variations in the off-site power system voltage levels caused by a trip of the nuclear unit and the possible bus transfers. Limits for high off-site power system voltages can be similarly determined by evaluating light load conditions. Transmission system studies should be performed in accordance with IEEE Std 765-1995.

A.8 Tolerances

Evaluation of setpoints should include the effects of tolerances (4) that are affected by the following:

a) Operating tolerances
   1) Ambient temperature variations;
   2) Relay control power variations;
   3) Accuracy class of potential transformers;
   4) Repeatability of the relays.

b) Setting tolerances
   1) Meter accuracy;
   2) Meter calibration tolerance;
   3) Setting tolerance permitted by procedures.

The operating tolerances are those elements that will cause the relay to operate at a value other than that to which it was set, while the setting tolerances are those that will cause it to be set at a value other than that which was intended.

A methodology for calculating tolerance effects is given in ANSI/ISA S67.04-1994. The tolerance that is calculated should be added to the ideal setpoint to ensure that if the relays are operating on the low side of the tolerance band there will still be adequate terminal voltage for all Class 1E equipment. A margin may also be applied at this stage in order to achieve the desired setpoint.

A.9 Bibliography

[A1] Russell, W. K., “Considerations for Improving the Reliability of the Offsite Power Supply for Nuclear Generating Stations,” *IEEE Transactions on Energy Conversion*, vol. 6, no. 4, pp. 649–655, Dec. 1991.

Copyright The Institute of Electrical and Electronics Engineers, Inc.
Provided by IHS under license with IEEE
No reproduction or networking permitted without license from IHS
Not for Resale

Annex B

(informative)

Guidelines for selection of overload protection for valve actuator motor circuits

B.1 Purpose

The purpose of this annex is to provide a better understanding of the intended application of this standard associated with overload protection for valve actuator motor (VAM) circuits.

B.2 Definitions

B.2.1 anticipated overloads: Those values of motor current in excess of motor nameplate rating that are expected to be realized during valve actuation due to the varying torque nature of the load.

B.2.2 duty cycle of a valve actuator: The duty cycle of a valve actuator that consists of the number of valve strokes needed for its intended service. Plant operation or testing may require successive stroking of the valve.

B.2.3 duty cycle time of a valve actuator: The time required for a valve to complete one stroke multiplied by the duty cycle.

B.2.4 valve actuator motor nominal current: The current that the motor is rated to carry for the duration of its rated duty, commonly known as the motor nameplate current.

B.2.5 valve actuator motor nominal torque: The torque that corresponds to the valve actuator nominal current.

B.2.6 valve stroke: The travel of a valve from a fully open to a fully closed position, or vice versa.

B.3 Discussion

Operationally, a valve is a device that has two end limits of travel: full open and full close. Typically, a valve actuator will have built-in position and/or torque switches to stop the unit at its full open or full closed positions.

The torque switches will not protect the valve assembly, including the motor, for torques less than the setting of the torque switch. Furthermore, if the torque switches are set higher than the torque available from the motor, the motor will go into a stall or locked-rotor condition when the actuator movement becomes mechanically limited at the endpoints of the valve stem movement (full open or closed). locked-rotor results in overheating of either the stator or rotor, depending on motor design. If the stator reaches its insulation temperature limit before the rotor reaches its limiting temperature, the motor is considered “stator limited,” whereas, if the rotor reaches its maximum limit before the stator, the motor is considered “rotor limited.” In midtravel, valve actuator motors may encounter torques substantially greater than the rated nominal torque due to mechanical conditions or problems such as a nonlubricated stem or binding in either the valve disc/ wedge or stem, which results in a running current that is higher than the rated nominal current [B4].[3] Therefore, it is necessary to provide overload protection that will complement the torque switch.

[3]The numbers in brackets preceded by the letter B correspond to the bibliographical items listed in B.6.

--`,,`-`-`,,`,,`,`,,`---
Copyright The Institute of Electrical and Electronics Engineers, Inc.
Provided by IHS under license with IEEE
No reproduction or networking permitted without license from IHS
Not for Resale

B.4 Overload protection devices

Guidelines associated with motor stator winding protection and overload protection devices are given in IEEE Std C37.96-1988 and are equally applicable for VAMs. The overload protection for VAMs is commonly provided by a combination of the following:

a) Internal devices located on stator windings;
b) External devices actuated by motor current;
c) Combination of internal and external devices.

B.4.1 Internal temperature sensor

Internal temperature sensors provide adequate early warning for motors that are stator temperature limited. However, they are ineffective for motors that are rotor limited. These sensors may be vulnerable to vibration and are not easily accessible for maintenance. Their use in power generating stations is usually limited to applications for alarm/surveillance purposes only.

B.4.2 Current sensing devices

External devices that are actuated by motor current include bimetallic thermal overload relays (TOR) provided as part of motor-starters and solid state overload (SSO) devices. The overload relays provide protection for overload and locked-rotor conditions.

The SSO devices may be microprocessor based or solid state type with electronic circuitry. The SSO relays may be separately mounted on the motor starter/contactor or be an integral part of solid state starters. The thermal model in these devices is based on the line current drawn by the motor and sensed through the built-in current transformers. The logic circuitry uses this current signal to calculate the I^2t characteristics. By selection of an appropriate relay the I^2t characteristics from this model can be closely matched to the I^2t characteristics of the motor. Several other optional protective features can be added to the overload protective function.

These devices are highly accurate—some of them have an accuracy of up to 1%. They are available in continuously adjustable NEMA classifications 5–30. This feature is extremely useful in selecting overload protection for VAMs with long stroke times due to compliance to the Nuclear Regulatory Commission Generic Letter 89-10 program, or due to gearing changes on the VAM operator. With a built-in thermal memory function these relays are capable of providing overload protection for a cold as well as a hot start of a motor. For the VAMs used in a cycling, jogging, or plugging application this is a particularly useful function. By selecting a relay with appropriate cold and hot start time-current characteristic curves a motor can be protected during repeated starts.

For protection afforded by TORs for small induction motors, refer to IEEE Std C37.96-1988. These guidelines are equally applicable to VAMs.

TORs made with bimetallic elements will have a tolerance band. The minimum tripping time should be considered to avoid a spurious trip during stroking of the valve, and the maximum tripping time should be considered to avoid exceeding thermal capability of the VAM.

Since TORs are almost exclusively used for motor protection, this annex addresses the selection process of only these devices.

Copyright The Institute of Electrical and Electronics Engineers, Inc.
Provided by IHS under license with IEEE
No reproduction or networking permitted without license from IHS
Not for Resale

B.4.3 Special consideration for valve actuator motor

Overload heater time-current characteristics are classified in accordance with NEMA ICS 2-1993. Application of these standards for VAMs needs special consideration. The most common practice is to rate ac VAMs for 15 min and dc VAMs for 5 min.

The current drawn by the VAM is variable in magnitude, and when the current is averaged over its entire stroke, its magnitude may be greater than the VAM nominal current. Therefore, based on industry experience, it is recommended that the current at twice nominal torque be used as a checkpoint for overload heaters to preclude tripping during the stroke. In addition, the time-current characteristics of the TOR should be coordinated with the time-current characteristics of the motor at nominal torque for duty cycle time, twice nominal torque for stroke time, and at locked-rotor. High-velocity butterfly valves may require higher average torque [B4], and the TOR should also be checked at a current that corresponds to 2.5 times VAM nominal torque for one stroke to assure that no spurious tripping will occur.

VAM acceleration times are normally very short. As a result, spurious tripping during acceleration can normally be prevented if the minimum protective device trip time at the locked-rotor current exceeds one second. For certain VAMs, it may be difficult to meet the constraints of locked-rotor time and still meet the stroke or duty cycle time at anticipated overloads. Overload relay characteristics of different NEMA classifications and/or models should be evaluated to obtain optimal coordination. In the case of high-torque motors with special alloy rotors, there may be no margin in the safe locked-rotor times [B2]. DC VAMs have considerably shorter duty rating than ac VAMs. They require the use of faster acting TORs that will ensure satisfactory completion of the actuator's duty cycle at anticipated operating currents corresponding to actual torques encountered during the duty cycle period or twice the nominal torque as the case may be.

Determination of duty cycle should be based on system design requirements. To avoid spurious TOR actuation during the duty cycle of the VAM, nominal current should be checked for the duty cycle time for the selection of the TOR. Thermal heat buildup of the VAM by stroking in excess of the duty cycle may not be protected by the TOR.

B.4.4 Information needed for the selection and coordination of overload relay protection

The following information is required to select overload heaters:

a) VAM currents at rated voltage and expected minimum and maximum voltages:
   1) Rated nominal current;
   2) Current at twice the rated nominal torque or at a selected torque for which the corresponding thermal capability is available;
   3) Locked-rotor current.

   NOTE—Manufacturer or field list data, or both, for LRC may vary from the nameplate current.
b) Time temperature characteristics of motor:
   1) Rated nominal current;
   2) Time the motor can safely carry current corresponding to twice nominal torque;
   3) Locked-rotor duration the motor can safely tolerate.
c) TOR time-current curves and TOR type and selection table and TOR application guidelines from the selected manufacturer or from IEEE Std C37.96-1988;
d) Motor rated ambient temperature, insulation class, rated nominal torque, and rated speed;
e) Stroke time of the valve actuator;
f) Maximum allowable duty cycle;
g) TOR ambient temperature during normal and abnormal plant operating conditions (if ambient compensated relays are not used).

Copyright The Institute of Electrical and Electronics Engineers, Inc.
Provided by IHS under license with IEEE
No reproduction or networking permitted without license from IHS Not for Resale

B.4.5 Correction for ambient temperature

TORs are available either as ambient compensated or uncompensated. It is preferable to use ambient compensated TORs, as these will essentially have the same minimum operating current and time-current characteristics within the range of its ambient compensation. For application of uncompensated TORs, specific manufacturers' recommendations should be obtained regarding time-temperature characteristics at operating temperatures other than rated. Refer to IEEE Std C37.96-1988 and [B1] for additional guidelines.

B.4.6 Correction for voltage variation

AC VAMs are sensitive to voltage variations because the magnetizing current of these motors represents a significant portion of the nominal rated current [B3]. As voltage increases, current increases; as voltage decreases, current decreases. The test data in Figure B.1 (for ac VAMs) illustrates the variation of current as a function of voltage. This effect should be considered in the selection of the TOR as illustrated in example B.5.2.

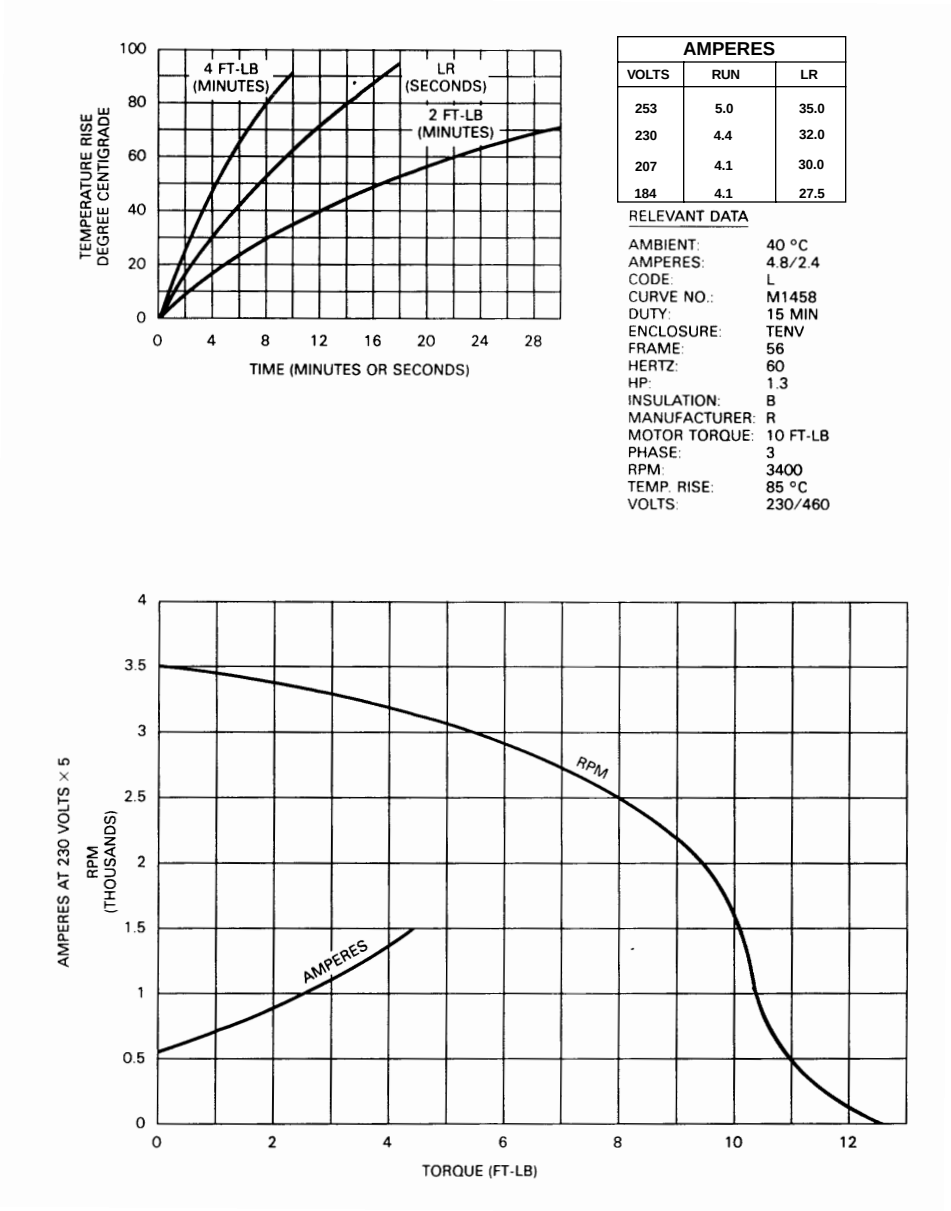

Figure B.1—AC motor performance curves for the calculation of examples B.5.1 and B.5.2

Copyright The Institute of Electrical and Electronics Engineers, Inc.
Provided by IHS under license with IEEE
No reproduction or networking permitted without license from IHS
Not for Resale

Terminal voltage variations affect dc VAMs as follows:

a) *Locked-rotor current*. The magnitude of the locked-rotor current varies in direct proportion to the terminal voltage. The effect of higher current at higher voltage should be considered in the selection of the TOR in consultation with the manufacturer.

b) *Current drawn during valve stroking*. Voltage variations have an insignificant effect on the current drawn by dc VAM during stroking. However, they have an effect on the stroke time due to change in speed resulting in either a shorter stroke time for higher voltage, or a longer stroke time for lower voltage. As the variation in current drawn is negligible, higher voltages do not compromise the thermal time-current capability of the VAM and, as such, have no effect on selection of the TOR. However, lower voltage may result in longer operating time and, thus, have the potential to result in spurious operation of the TOR if not properly selected. The effect of voltage variation is illustrated in example B.5.3.

B.5 Typical procedures for selection of TORs

The procedures discussed here are adapted from IEEE Std C37.96-1988 to suit the unique requirements of VAMs. The procedure presented is intended to represent a typical method used to select TORs, and is not intended to represent the only method.

Overload heater tables are listed in terms of motor full load current. The currents listed in these tables (minimum value if a range is given) should be converted to trip current (usually shown at 100% rated current).

This will provide the correct per-unit (PU) value to obtain the corresponding tripping time from the TOR time-current curve (see Figure B.2).

It is desirable to set TORs to allow valve motors to carry overloads that will not damage the motor, since torque requirements are variable and stroke times are relatively short compared to rated operating times. For this reason, TOR operation should be selected to allow a motor to run at twice nominal torque during its stroke time or at nominal torque for the duty cycle time. It should be noted that actual TOR operation can be as high as 125% of the minimum current, or 115% of the maximum current of the indicated range of the TOR. To select a TOR, a multiplier (which recognizes TORs are designed for continuous applications, whereas valves are intermittent loads) should be used to reduce the value of the motor full load amperes. This information should be obtained from the TOR manufacturer. If this is not possible, refer to information available in IEEE Std C37.96-1988.

Copyright The Institute of Electrical and Electronics Engineers, Inc.
Provided by IHS under license with IEEE
No reproduction or networking permitted without license from IHS Not for Resale

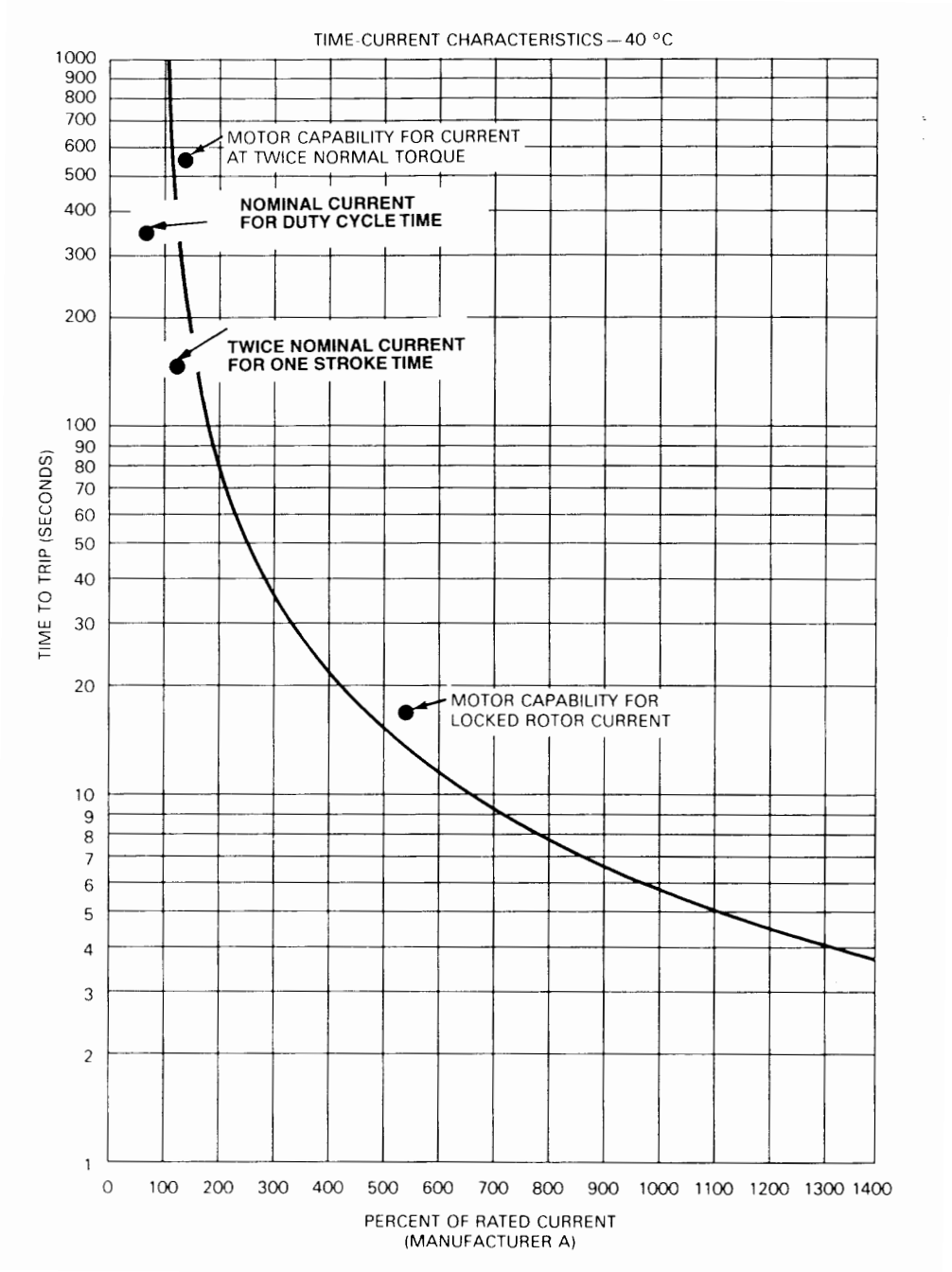

Figure B.2—Heater curve and thermal limit points for the calculation example of B.5.1

Copyright The Institute of Electrical and Electronics Engineers, Inc.
Provided by IHS under license with IEEE
No reproduction or networking permitted without license from IHS
Not for Resale

The current corresponding to twice nominal torque and motor locked-rotor current is divided by the current corresponding to 1 PU value to arrive at PU currents, which will determine the trip time at overload and locked-rotor. If trip time is too short, the next larger heater should be evaluated.

After the trip time under locked-rotor condition is found adequate, the trip time for nominal torque and twice nominal torque is determined. An evaluation is made based on these trip times relative to the duty cycle of the valve and the thermal capability of the motor, as defined by the motor performance curve (refer to Figure B.1).

The above concepts, including the application of the criteria, are illustrated in the following procedure for thermal overload trip criteria:

a) When carrying locked-rotor current, the thermal overload relay should actuate in a time within the motor's limiting time for carrying locked-rotor current (typically 10–15 s).

b) When carrying twice nominal torque current, the thermal overload relay should actuate in a time within the motor's limiting time for carrying twice nominal torque current. (This time is to be obtained from the motor's temperature-time-load characteristic curve.)

c) When carrying the current at twice nominal torque, the thermal overload relay, as a minimum, should not actuate within the stroke time of the VAM.

d) When carrying nominal current, the thermal overload relay should not actuate within the duty cycle time of the VAM.

e) When carrying locked-rotor current, the thermal overload relay should not actuate in the first second to allow the VAM to accelerate.

B.5.1 Typical example of thermal overload relay heater selection for ac valve actuator motors (TOR Manufacturer A)

Step 1—Valve actuator and valve actuator motor data

Motor to be protected: 10 ft-lb (starting torque), 3400 rpm, 3-phase, 60 Hz, 460 V, 1.3 HP, (nominal torque 2 ft-lb), 15-min duty, class B, totally enclosed, nonventilated valve actuator motor. Effect of voltage variation not considered.

Nominal torque:	2.0 ft-lb
Nameplate or nominal current:	2.4 A
Current at twice nominal torque:	3.3 A
Locked-rotor current:	16.0 A
Acceleration time:	1s
Valve stroke time:	180 s
Motor performance curves:	Figure B.1
Duty cycle:	2 strokes
Duty cycle time of valve actuator:	360 s
Protective Device Data:	
Time-current characteristics of TOR manufacturer A heaters (ambient compensated):	Figure B.2
Heater selection table of TOR manufacturer A:	Table B.1

Copyright The Institute of Electrical and Electronics Engineers, Inc.
Provided by IHS under license with IEEE
No reproduction or networking permitted without license from IHS Not for Resale

Step 2—Determine the time-temperature limits of motor

From the motor performance curve given in Figure B.1, the motor capability can be established based on the time at which the motor would reach a temperature rise of 85 °C at each specified load as follows:

Nominal torque:	greater than 2100 s capability
Twice nominal torque:	540 s capability
Locked-rotor:	15 s capability

Step 3—Select TOR–Manufacturer A

Select a trial heater as follows:

A correction factor of 0.7 is used for this 15 min duty motor to obtain an adjusted motor nominal current as a starting point in the heater selection process from IEEE Std C37.96-1988.

$$2.4\ \text{A} \times 0.7\ =\ 1.68\ \text{A}$$

From the heater table in Table B.1, select a trial heater of comparable rating. Select heater C.

Step 4a—Calculate trip amperes for heater C

As indicated by the TOR manufacturer, the TOR trip current value is obtained by multiplying the maximum table value by a factor of 1.15.

$$1.67\text{A} \times 1.15\ =\ 1.92\text{A}$$

$$=\ 1\ \text{PU}$$

Step 4b—Check trip time for locked-rotor

$$\frac{16\ \text{A}}{1.92\ \text{A}}\ =\ 8.33\ \text{PU}$$

Trip time:	7 s
Motor capability:	15 s

Step 4c—Check trip time at twice nominal torque current

$$\frac{3.3\ \text{A}}{1.92\ \text{A}}\ =\ 1.72\ \text{PU}$$

Trip time:	130 s
Motor capability:	540 s

Step 4d—Check minimum trip time at nominal torque current

$$\frac{2.4\ \text{A}}{1.92\ \text{A}}\ =\ 1.25\ \text{PU}$$

Trip time:	250 s
Motor capability:	2100 s

Copyright The Institute of Electrical and Electronics Engineers, Inc.
Provided by IHS under license with IEEE
No reproduction or networking permitted without license from IHS
Not for Resale

Table B.1—Heater selection table for Manufacturer A

Maximum motor full load amperes			
Heater type number	**Size 00**	**Size 0**	**Size 1**
A	1.38	1.38	1.38
B	1.52	1.52	1.52
C	1.67	1.67	1.67
D	1.86	1.86	1.86
E	2.04	2.04	2.04
F	2.25	2.25	2.25
G	2.47	2.47	2.47
NOTE—For Manufacturer A, TOR trip current is found by multiplying the maximum motor full load amperes by 1.15.			

Since the thermal capability of the motor at twice nominal torque is 540 s, the motor is considered protected. Compared to 180 s stroke time, nuisance tripping will occur if torque requirement exceeds twice nominal for entire stroke time or nuisance tripping will also occur for the full duty cycle at nominal torque. Evaluate heater D by repeating Steps 4a–d.

Step 5—Evaluation of heater D

Calculate trip amperes for heater D

$$1.86\,\text{A} \times 1.15 = 2.14\,\text{A}$$

$$= 1\ \text{PU}$$

Check trip time for locked-rotor

$$\frac{16\ \text{A}}{2.14\ \text{A}} = 7.48\ \text{PU}$$

Trip time: 8.5 s
Motor capability: 15 s

Check trip time at twice nominal torque current

$$\frac{3.3\ \text{A}}{2.14\ \text{A}} = 1.54\ \text{PU}$$

Trip time: 150 s
Motor capability: 540 s

Copyright The Institute of Electrical and Electronics Engineers, Inc.
Provided by IHS under license with IEEE
No reproduction or networking permitted without license from IHS Not for Resale

Check trip time at nominal torque current

$$\frac{2.4\ \text{A}}{2.14\ \text{A}} = 1.12\ \text{PU}$$

Trip time: 500 s
Motor capability: greater than 2100 s

Compared to 180 s stroke time, nuisance tripping will occur only if current exceeds twice nominal for entire stroke time.

Evaluate heater G by repeating Steps 4a–c.

Step 6—Evaluation of heater G

Calculate trip amperes for heater G

$$2.47\text{A} \times 1.15 = 2.84\text{A}$$

$$= 1\ \text{PU}$$

Check trip time for locked-rotor

$$\frac{16\ \text{A}}{2.84\ \text{A}} = 5.63\ \text{PU}$$

Trip time: 13 s
Motor capability: 15 s

Check trip time at twice nominal torque current

$$\frac{3.3\ \text{A}}{2.84\ \text{A}} = 1.16\ \text{PU}$$

Trip time: 500 s
Motor capability: 540 s

Check trip time at nominal torque current

$$\frac{2.4\ \text{A}}{2.84\ \text{A}} = 0.85\ \text{PU}$$

Trip time: Infinite
Motor capability: greater than 2100 s

While trip time at nominal torque current is calculated as infinite, this is acceptable since valve operation at nominal torque current seldom exceeds 2100 s.

Conclusion: Heater G is acceptable.

Copyright The Institute of Electrical and Electronics Engineers, Inc.
Provided by IHS under license with IEEE
No reproduction or networking permitted without license from IHS
Not for Resale

B.5.2 Typical example of thermal overload relay heater selection for ac valve actuator motors (TOR Manufacturer B)

Step 1—Valve actuator and valve actuator motor data

The data that describes the valve actuator and valve actuator motor is the same as that given in B.6.1, except that stroke time is 120 s.

For this example, the TOR is nonambient compensated and VAM terminal voltage is variable. The following conditions will be assumed:

a) TOR ambient temperature varies from 25–55 °C. The TOR manufacturer recommends the correction factors shown in Table B.2 be used for their nonambient compensated TOR. Trip current correction factors are applied to the PU value of the trip current.

b) VAM terminal voltage varies from 368 VAC to 506 VAC.

Step 2—Motor thermal capability

Same as B.5.1.

Step 3—Protective device data

Figure B.3 describes time-current characteristics of TOR manufacturer B (Bimetallic TOR). Table B.3 lists heater sizes.

Table B.2—Heater temperature correction factors for Manufacturer B

Ambient temperature (°C)	Trip current correction factor
55	1.06
50	1.04
45	1.02
40	1.00
35	0.99
30	0.97
25	0.96
20	0.95

Copyright The Institute of Electrical and Electronics Engineers, Inc.
Provided by IHS under license with IEEE
No reproduction or networking permitted without license from IHS Not for Resale

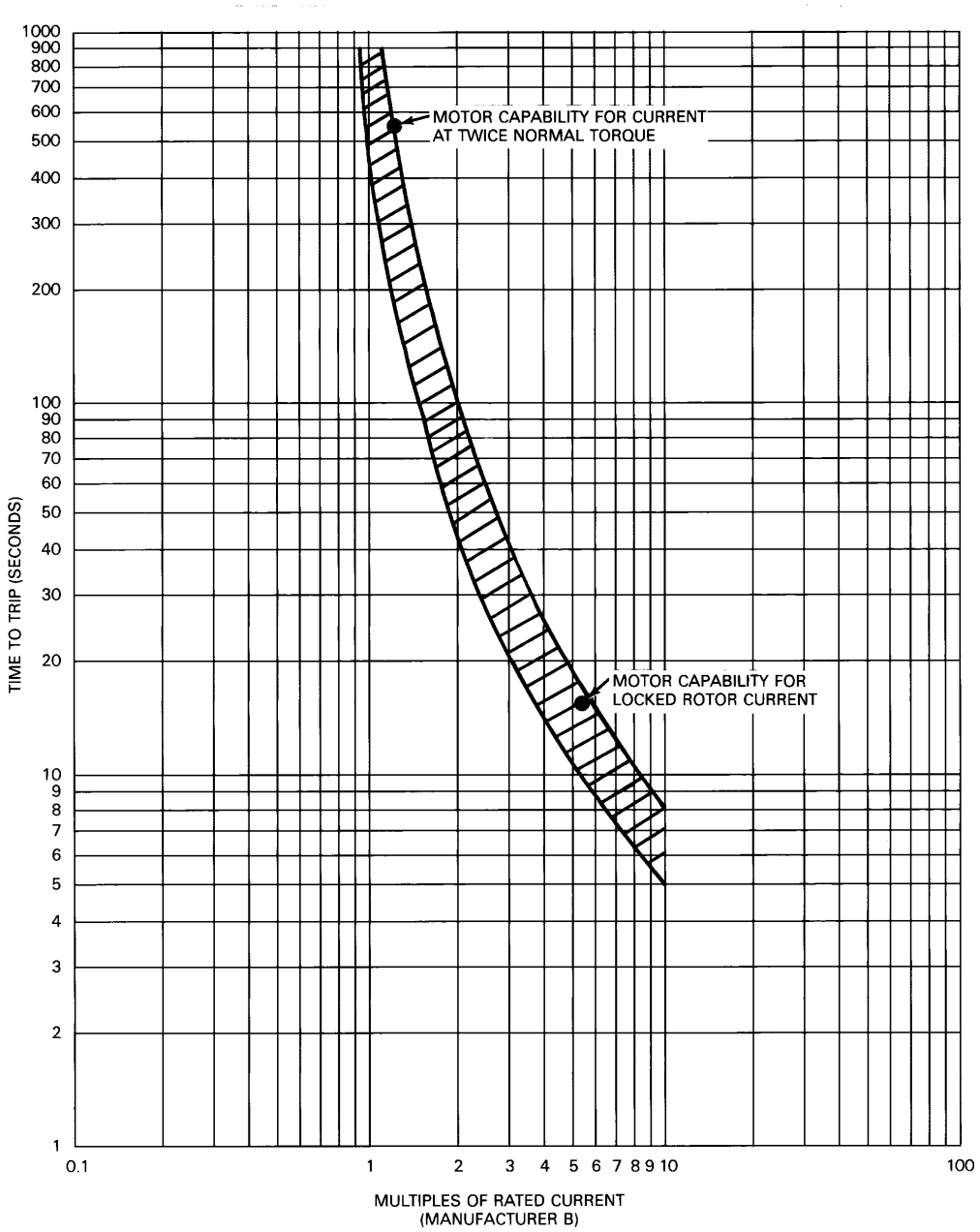

Figure B.3—Heater curve and thermal limit points for the calculation example of B.6.2

Step 4—Select trial heater size

A correction factor of 0.7 is used for this 15-min motor.

$$2.4\ \text{A} \times 0.7 = 1.68\ \text{A}$$

Select 220A heater.

Copyright The Institute of Electrical and Electronics Engineers, Inc.
Provided by IHS under license with IEEE
No reproduction or networking permitted without license from IHS
Not for Resale

Table B.3—Heater selection table for Manufacturer B

Heater catalog number	Maximum motor full load amperes
196A	1.67
220A	1.79
239A	1.98
268A	2.24
301A	2.43
NOTE—Minimum heater current is obtained by adding 0.01 A to the next smaller heater rating. The trip current is obtained by multiplying the minimum heater current by 1.25.	

Step 5—Calculate TOR trip current

The minimum heater current is 0.01 A plus the rating of the preceding smaller size heater, which will be 0.01 plus 1.67 (corresponding to heater 196A). For 220 A, minimum heater current is 1.68 A.

$$1.68\,\text{A} \times 1.25 = 2.10\,\text{A}$$

$$= 1\ \text{PU}$$

Step 6—Check locked-rotor trip time

$$\frac{16\ \text{A}}{2.10\ \text{A}} = 7.62\ \text{PU}$$

Trip time: 12 s
Motor capability: 15 s

NOTE—Low TOR ambient temperature for nonambient compensated TORs adversely affects VAM locked-rotor protection. If the TOR ambient temperature is 25 °C, then the per-unit trip current becomes (7.62) (0.96) = 7.37 PU (from correction factors in step 1). This increases the maximum trip time to 12.5 s; worse protection, but still acceptable since locked-rotor withstand time is 15 s.

High VAM terminal voltage may affect VAM locked-rotor protection. If VAM terminal voltage is 506 VAC, or 110% of rated 460 VAC, then locked-rotor current increases from 16 A to 17.5 A (from Figure B.1 voltage table; values divided by 2). This causes the following two effects:

a) Current through TOR increases, which decreases trip time;
b) Heat input to motor insulation increases (with the square of the current), which decreases the locked-rotor withstand time.

The heat input to the motor insulation can be represented by KI^2t. At locked-rotor, the maximum heat input the motor can withstand at rated voltage without damage is K (16 A)^2 (15 s) = K (3840). At a locked-rotor

Copyright The Institute of Electrical and Electronics Engineers, Inc.
Provided by IHS under license with IEEE
No reproduction or networking permitted without license from IHS Not for Resale

current of 17.5 A, the withstand time is t = K 3840/K $(17.5)^2$ = 12.5 s. At 17.5 A or 17.5/2.10 = 8.33 PU, the TOR will trip in 9.5 s, and locked-rotor TOR protection is maintained.

Step 7—Check twice-rated load trip time

$$\frac{3.3\ \text{A}}{2.10\ \text{A}} = 1.57\ \text{PU}$$

Maximum trip time: 200 s
Motor capability: 540 s
Minimum trip time: 70 s

Compare to 120-s stroke time. Nuisance tripping will occur if current exceeds twice nominal torque current for the entire stroke. Select a bigger heater and proceed to step 7a.

Step 7a—Select 239A

$$1.80\,\text{A} \times 1.25 = 2.25\,\text{A}$$

$$= 1\ \text{PU}$$

Check twice-rated load trip time

$$\frac{3.3\ \text{A}}{2.25\ \text{A}} = 1.47\ \text{PU}$$

Minimum trip time: 110 s

Compare to 120-s stroke time. Nuisance tripping will occur if current exceeds twice nominal torque current for the entire stroke. Select a bigger heater and proceed to step 7b.

Step 7b—Select 268A

$$1.99\,\text{A} \times 1.25 = 2.49\,\text{A}$$

$$= 1\ \text{PU}$$

Check twice-rated load trip time

$$\frac{3.3\ \text{A}}{2.49\ \text{A}} = 1.33\ \text{PU}$$

Minimum trip time: 150 s

Compare to 120-s stroke time. Nuisance tripping will not occur if current exceeds twice nominal torque current for the entire stroke.

NOTE—If the TOR temperature is 25 °C, then the per-unit trip current becomes (1.33) (0.96) = 1.28 PU. This increases the minimum trip time to 170 s.

Conclusion: Low TOR ambient does not adversely affect nuisance tripping.

--`,,`-`-`,,`,,`,`,,`---
Copyright The Institute of Electrical and Electronics Engineers, Inc.
Provided by IHS under license with IEEE
No reproduction or networking permitted without license from IHS
Not for Resale

If the TOR temperature is 55 °C, then the per-unit trip current becomes (1.33) (1.06) = 1.41. This decreases the minimum trip time to 120 s.

Conclusion: High TOR ambient adversely affects nuisance tripping.

Low VAM terminal voltage does not adversely affect nuisance tripping, but high VAM terminal voltage does adversely affect nuisance tripping. Low VAM terminal voltage will cause a lower current to flow through the TOR. Per Figure B.1, a voltage of 368 VAC or 80% of rated (460 VAC) will cause the twice-rated load current (3.3 A) to decrease to (4.1/4.4) (3.3) = (0.93) (3.3) = 3.07 A. This decreases the per-unit trip current to 3.07/2.49 = 1.23 PU. The corresponding minimum trip time is increased to 180 s no adverse effect on nuisance tripping is realized. If VAM terminal voltage is 506 VAC or 110% of rated (460 VAC), then "twice rated load" current will increase by 5.00/ 4.40 = 1.14. Thus, the per-unit trip current increases to (1.33 PU) (1.14) = 1.52 PU, and the minimum trip time decreases to 100 s, which is worse for nuisance tripping.

Select a bigger heater due to affect of high VAM terminal voltage and proceed to Step 7c.

Step 7c—Select 301A

$$2.25\,\text{A} \times 1.25 = 2.81\,\text{A}$$

$$= 1\ \text{PU}$$

Check twice-rated load trip time

$$\frac{3.3\ \text{A}}{2.81\ \text{A}} = 1.17\ \text{PU}$$

Minimum trip time: 200 s
Maximum trip time: 500 s

NOTE—With TOR ambient temperature of 55 °C, the per-unit trip becomes (1.17 PU) (1.06) = 1.24 PU, decreasing the minimum trip time to 180 s, an acceptable result. With VAM terminal voltage at 506 VAC, the per-unit trip current becomes (1.17 PU) (1.14) = 1.33 PU, decreasing the minimum trip time to 145 s, which is an acceptable result.

For one stroke time, there will not be nuisance tripping. Proceed to Step 7d.

Step 7d—Check locked-rotor time

$$\frac{16\ \text{A}}{2.81\ \text{A}} = 5.69\ \text{PU}$$

Maximum trip time: 16 s

However, the minimum trip time is 9 s (Figure B.3). Therefore, the locked-rotor capability of 15 s should not be compromised.

NOTE—With TOR ambient temperature of 25 °C, the per-unit trip becomes (5.69 PU) (0.96) = 5.46 PU, increasing the maximum trip time to 17 s. With VAM terminal voltage at 506 VAC, the locked-rotor current will increase to 17.5 A with a locked-rotor withstand time of 12.5 s. The TOR will trip at 17.5 A/2.81 A = 6.22 PU in a maximum time of 14 s and a minimum time of 8.5 s.

Copyright The Institute of Electrical and Electronics Engineers, Inc.
Provided by IHS under license with IEEE
No reproduction or networking permitted without license from IHS Not for Resale

Recommend selection of this heater and have the trip point of the heater checked by field testing. If the measurements indicate that the trip time will exceed 15 s, other design solutions should be explored, such as the following:

a) Obtain a TOR that possesses characteristics such that it will be possible to meet all criteria;
b) Replace VAM with larger motor to allow decrease in stroke time while maintaining the same torque.

Step 7e—Check trip time at nominal torque current

$$\frac{2.4\ \text{A}}{2.81\ \text{A}} = 0.85\ \text{PU}$$

Trip time: Infinite

B.5.3 Typical example of thermal overload relay heater selection for dc valve actuator motors

Step 1 — Manufacturer's data

Motor to be protected: 100 ft-lb, 1900 rpm, 250 VDC, 5-min duty class B, TENV.

Reference motor curve:	Figure B.4
Rated load current:	30 A
Current at twice nominal torque:	54 A
Locked-rotor current:	146 A
Acceleration time:	1 s
Valve stroke time:	10 s

Duty cycle: 2 strokes

Copyright The Institute of Electrical and Electronics Engineers, Inc.
Provided by IHS under license with IEEE
No reproduction or networking permitted without license from IHS
Not for Resale

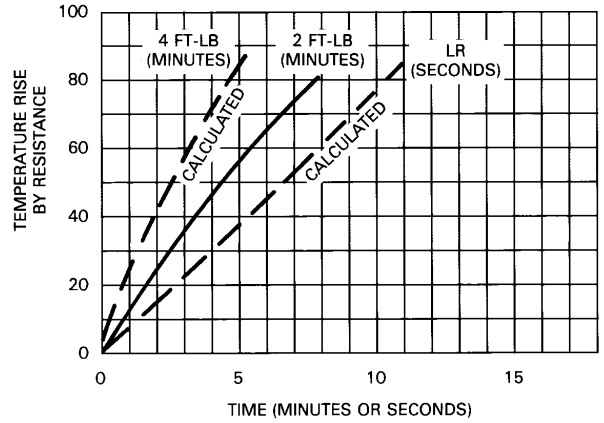

VOLTS	AMPERES NL	AMPERES RL	AMPERES LR
275		30	161
250		30	146
225		30	131

RELEVANT DATA

AMBIENT:	40 °C
AMPERES:	30
CURVE NO.:	K4054
DUTY:	5 MIN
ENCLOSURE:	TENV
FRAME:	224
HERTZ:	—
HP:	7.25
INSULATION:	B
MANUFACTURER:	P
NOMINAL LOCKED ROTOR TORQUE:	100 FT-LBS
PHASE:	DC
RPM:	1900
TEMP. RISE:	85 °C
VOLTS:	250

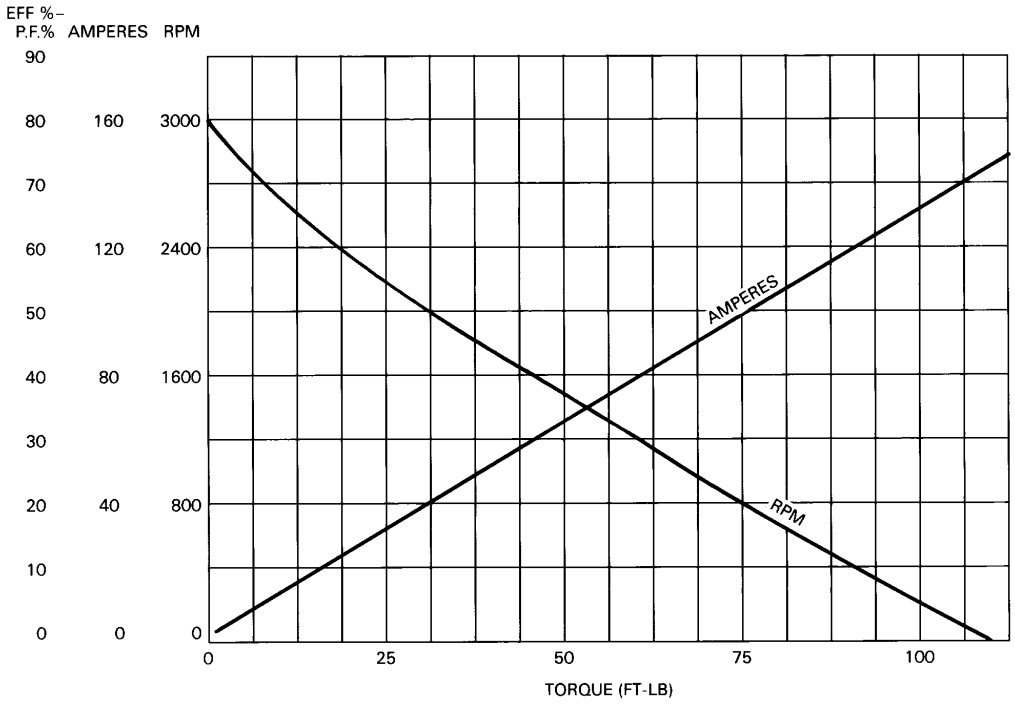

Figure B.4—DC motor performance curves for the calculation of example B.5.3

Copyright The Institute of Electrical and Electronics Engineers, Inc.
Provided by IHS under license with IEEE
No reproduction or networking permitted without license from IHS
Not for Resale

Step 2—Motor thermal capability

DC motor thermal data from test runs are only available at rated load. Where temperature rise is rapid and where copper losses predominate, calculations of temperature rise are obtainable from the motor manufacturer. This is the case for temperature rise at twice-rated load and for temperature rise at locked-rotor current.

Rated load current:	480 s
Twice-rated load:	300 s
Locked-rotor:	10 s

Step 3—Protective device data

Figure B.5 describes the ambient compensated thermal response of the device.

Table B.4 lists heater sizes.

Table B.4—Heater selection table for Manufacturer B (for NEMA size 2 starter)

Heater catalog number	Maximum motor full load amperes
A	16.3
B	17.9
C	19.7
D	21.2
E	22.3
F	23.5
NOTE—Minimum heater current is obtained by adding 0.1 A to the next smaller heater rating. The trip current is obtained by multiplying the minimum heater current by 1.25.	

Step 4—Select trial heater size

A correction factor of 0.6 is used for this 5-min motor:

$$30\ \text{A} \times 0.6 = 18.0\ \text{A}$$

Select heater C.

Copyright The Institute of Electrical and Electronics Engineers, Inc.
Provided by IHS under license with IEEE
No reproduction or networking permitted without license from IHS
Not for Resale

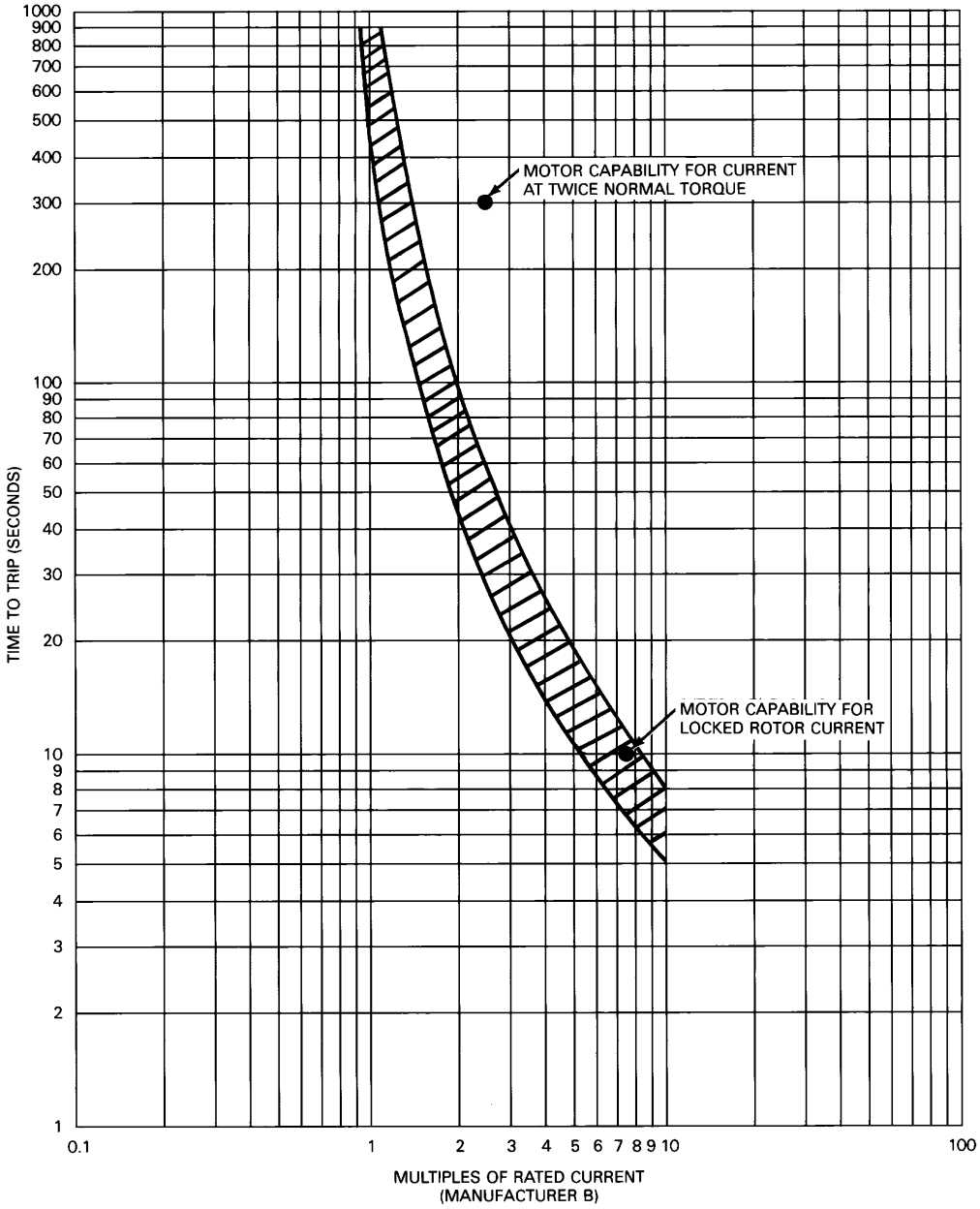

Figure B.5—Heater curve and thermal limit points for the calculation of example B.5.3

Copyright The Institute of Electrical and Electronics Engineers, Inc.
Provided by IHS under license with IEEE
No reproduction or networking permitted without license from IHS
Not for Resale

Step 5—Calculate trip amperes of heater

For heater C, maximum motor full load current is 19.7 A and minimum motor full load current is 18.0 A.

Heater trip amperes are as follow:

$$18.0\,\text{A} \times 1.25 = 22.5\,\text{A}$$

$$= 1\ \text{PU}$$

Step 6—Check locked-rotor trip time

$$\frac{146\ \text{A}}{22.5\ \text{A}} = 6.49\ \text{PU}$$

Maximum trip time: 13 s

Select a smaller heater and go back to Step 4.

Step 4a —Select heater B

Step 5a —Calculate heater PU

$$16.4\,\text{A} \times 1.25 = 20.5\,\text{A}$$

$$= 1\ \text{PU}$$

Step 6a—Check locked-rotor trip time

$$\frac{146\ \text{A}}{20.5\ \text{A}} = 7.12\ \text{PU}$$

Maximum trip time: 11 s
Motor capability: 10 s

Step 7—Check twice-rated load trip time

$$\frac{54\ \text{A}}{20.5\ \text{A}} = 2.63\ \text{PU}$$

Maximum trip time: 55 s
Compare to 300-s thermal capability.

Therefore, the motor is protected.

Minimum trip time: 25 s
Compare to 10-s operating time.

Therefore, nuisance trips will be avoided.

--`,,`-`-`,,`,,`,`,,`---

Copyright The Institute of Electrical and Electronics Engineers, Inc.
Provided by IHS under license with IEEE
No reproduction or networking permitted without license from IHS
Not for Resale

Step 8—Check minimum trip time at nominal current

$$\frac{30\ \text{A}}{20.5\ \text{A}} = 1.46\ \text{PU}$$

Maximum trip time: 200 s
Greater than the duty cycle time, and thus acceptable.

NOTE—The next smaller heater was examined in order to improve locked-rotor trip time. However, the minimum trip time at twice rated load indicated nuisance trip difficulties.

Step 9—Consideration of maximum and minimum anticipated motor terminal voltages

At a maximum dc bus voltage condition, the motor terminal voltage at locked-rotor condition may be calculated to be 265 V, for example. The resulting locked-rotor current would be (265/250) × 146 = 155 A.

$$\frac{155\ \text{A}}{20.5\ \text{A}} = 7.56\ \text{PU}$$

The trip time is 7–12 s. At locked-rotor conditions over short time period, no heat is being dissipated by the motor, and the KI^2t limit is the maximum amount of heat that can be absorbed without thermal damage at this condition. The manufacturer allows 10 s at a locked current of 146 A. This represents a heat input of $KI^2t = K146^2 \times 10 = K2.13 \times 10^5$ J. At the elevated voltage of 265 V, $K155^2 \times 12 = K2.88 \times 10^5$ J. This is a 35% increase in heat input to the motor and would be a cause for concern. Recommend field testing of the TOR to check actual trip setpoint and repeatability. At a minimum dc bus voltage, the motor terminal voltage may be calculated to be 200 V, for example.

The change in actuator speed may be estimated to be proportional to the change in motor torque. The reduction in motor torque from nominal at reduced voltage may be estimated by using the voltage ratio. The new stroke time is then:

$$\frac{250\ \text{V}}{200\ \text{V}} \times 10\ \text{s} = 12.5\ \text{s}$$

The new duty cycle time is then 25 s.

12.5 s is less than the 25-s twice nominal torque trip time.
25 s is less than the 200-s nominal torque trip time.
The TOR is acceptable at reduced voltage.

B.6 Bibliography

[B1] Baxter, F. D., “The Dangers of Bypassing Thermal Overload Relays in Nuclear Power Plant Motor-Operated Valve Circuits,” *IEEE Transactions on Power Apparatus and Systems*, vol. PAS-99, no. 6, pp. 2287–2291, Nov./Dec. 1980.

[B2] IEEE Working Group PES-NPEC-SC4.7 Report, “Design Features and Protection of Valve Actuator Motors,” no. 90 WM 094-3 EC, 1990 Winter Meeting.

[B3] Kueck, J. D., “An Investigation of Magnesium Rotors in Motor-Operated Valve Actuators,” *IEEE Transactions on Energy Conversion,* vol. 3, pp. 40–43, Mar. 1988.

[B4] Richards, A., and Formica, C., “Motor Overload Protection for Motor Actuated Valves,” *IEEE Transactions on Power Apparatus and Systems,* PAS-100, pp. 43–50, Jan./Feb. 1981.

Copyright The Institute of Electrical and Electronics Engineers, Inc.
Provided by IHS under license with IEEE
No reproduction or networking permitted without license from IHS Not for Resale

Annex C

(informative)

Auxiliary system automatic bus transfer—protection concerns

C.1 Purpose

This annex gives a brief description of station auxiliary system automatic bus transfer schemes followed by a more detailed discussion of the impact to protection schemes and protective devices.

In this annex, the primary emphasis is on bus transfers between two bus circuits under automatic control. These two circuits are designated in this annex normal and alternate sources as identified in Figure C.1.

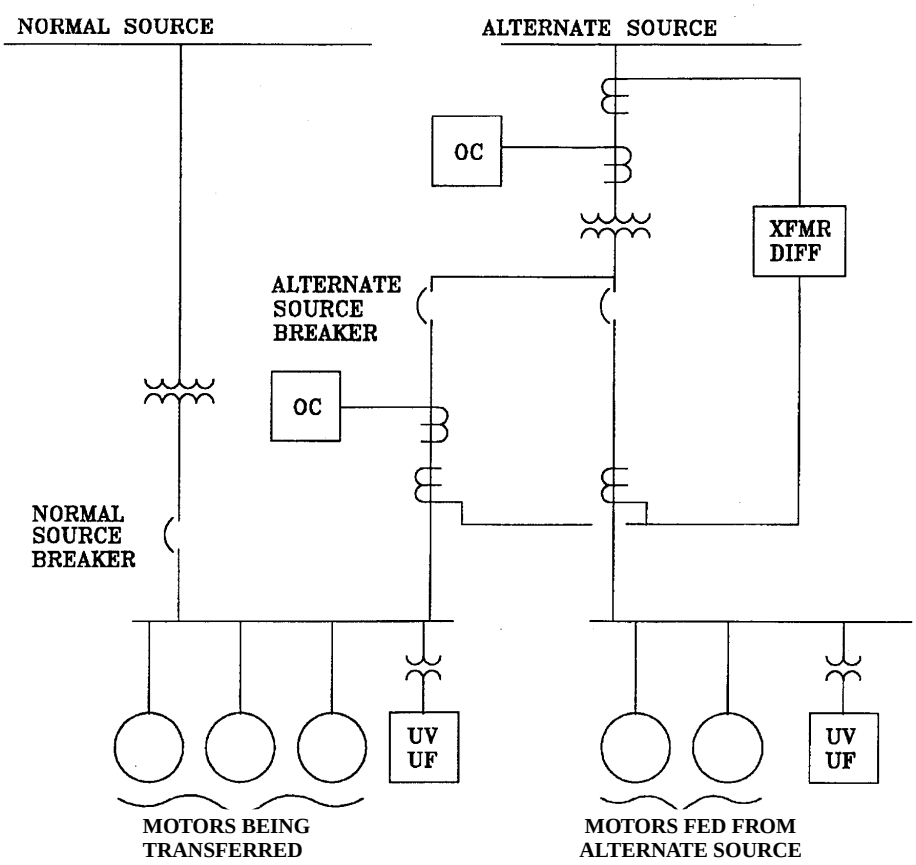

Figure C.1—Basic protection schemes

Copyright The Institute of Electrical and Electronics Engineers, Inc.
Provided by IHS under license with IEEE
No reproduction or networking permitted without license from IHS
Not for Resale

C.2 Discussion

The subject of auxiliary bus transfer has been covered in many papers, and the concerns for motor torque and transformer impact loading are well documented. A description of bus transfer scheme philosophies, advantages/disadvantages, operational experiences, and an extensive bibliography can be found in [C3]. This annex is intended to cover protection related issues and specifically protection related issues of nuclear generating plant station auxiliary systems. Therefore, only those items marked with an asterisk (*) are considered in detail.

There are many concerns associated with bus transfer, some of which include the following:

a) Damage to the motors being transferred (transient torque);
b) Reacceleration after transfer of the motors being transferred;
c) Ride through of any motors already supplied from the alternate source;
d) Transfer coincident with starting of motors already supplied from the alternate source;
e) Dynamic loading on the alternate source transformers;
f) Alternate source overcurrent relay coordination;*
g) Saturation of differential circuit current transformers on the alternate source transformers;*
h) Underfrequency relay operation;*
i) Undervoltage relay operation.*

An example of a station auxiliary bus supply system is shown in Figure C.1. The basic protection schemes discussed in this annex are included.

An auxiliary system bus transfer is simply the transfer of power sources from the normal source to the alternate source. Many different schemes are in use, but most fall into one of the following three categories and subcategories:

a) *Fast (4–10 cycles) transfer* (the objective is to reduce bus dead time):
    1) *Sequential.* This scheme uses *b* or early *b* contacts from opening of normal source breaker to close alternate source breaker.
        i) *Supervised.* This scheme uses a sync check type of relay to qualify transfer, and is usually backed up by a residual scheme for cases where the sync check relay blocks fast transfer.
        ii) *Unsupervised.* The transfer is initiated without a sync check. This is a faster scheme but has exposures to out-of-phase switching conditions.
    2) *Simultaneous.* This scheme uses the same control signal to trip the normal source breaker and close the alternate source breaker, and relies on the fact that the breakers trip in less time than they close. This is a faster scheme but there is no indication that the normal source breaker has opened before the alternate source closes.
b) *In-phase transfer* (the objective is to reduce shock to motors and system inrush by closing the alternate source bus breaker when the alternate source bus phase angle is within acceptable limits).
c) *Residual (≈40+ cycles) transfer* (the objective is to close alternate source breaker after the transferring bus residual voltage has decayed to a safe value):
    1) *Voltage decay.* Alternate source breaker is closed when the transferring bus voltage has decayed to a predetermined value, usually around 25%.
    2) *Time delay.* Alternate source breaker is closed based on a time delay that is associated with the expected voltage decay of the transferring bus.

The details of the different bus transfer schemes are very important to the operation of the systems associated with the motors involved in the transfer. However, the protection concerns are common to most of the automatic transfer methods and the following discussions are generic regardless of the transfer scheme.

Copyright The Institute of Electrical and Electronics Engineers, Inc.
Provided by IHS under license with IEEE
No reproduction or networking permitted without license from IHS Not for Resale

C.3 Bus transfer analysis

Dynamic modeling is one method that can be used to predict the operation of the bus being transferred before, during, and after the transfer, in order to review protection concerns. Regardless of the modeling/ analysis method used, many of the criteria in this section are applicable to the concerns of C.5.

a) *Before Case* is used to establish the steady state conditions of the motors prior to the transfer. At some point after a bus transfer signal is initiated, the source breaker is signaled to open. After the normal source breaker contacts begin to part an arc is formed. When the arc is extinguished the motor bus is operating as an isolated system.

b) *During Case* models the system as it operates isolated from a source. The time between extinction of the arc in the normal source breaker and reenergization from the alternate source breaker is commonly referred to as the “dead” time. During the dead time the group of motors still connected to the bus will operate as an isolated system. Some of the motors in the group will act as generators and others will act as loads. Eventually, the residual flux in all of the motors will be depleted and the bus voltage will drop to zero. In the interim, the composite bus voltage will begin to decay in both magnitude and phase in a manner similar to that shown in Figure C.2. Accurate prediction of this decay is important in the design of the bus transfer scheme as well as the protection concerns.

c) *After Case* determines what dynamic voltages are present and currents flowing after the transfer. These voltages and currents are the primary concern for bus transfer protection issues.

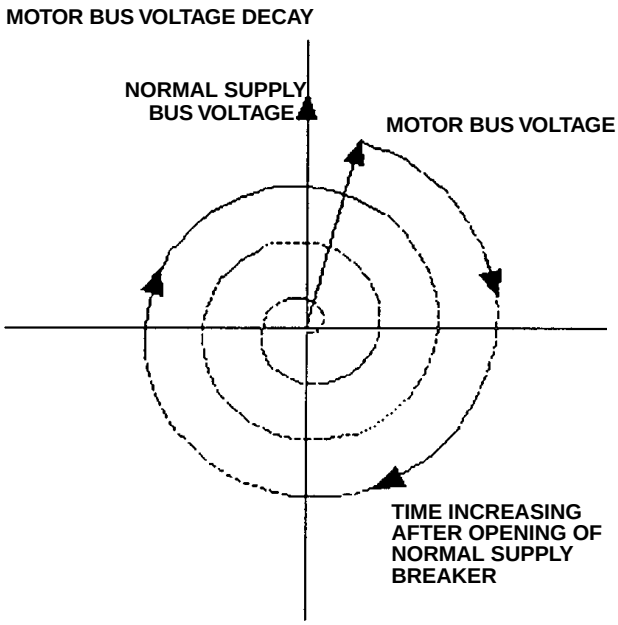

Figure C.2—Typical bus voltage decay

Copyright The Institute of Electrical and Electronics Engineers, Inc.
Provided by IHS under license with IEEE
No reproduction or networking permitted without license from IHS
Not for Resale

The prediction of the voltage (magnitude and phase angle) across the alternate source breaker just prior to its closure (transition from the “during” to “after” cases described above) is referred to as preclosure voltage, and is one of the three key elements in evaluation of the transfer scheme.

The four factors used to determine the voltage and current seen by the protective devices are as follow:

a) Preclosure voltage (magnitude and phase angle);
b) Alternate source voltage (magnitude and phase angle);
c) System impedance;
d) Motor bus voltage (magnitude and phase angle).

The transferring bus voltage is decaying in both voltage magnitude and phase angle. The voltage decay is primarily a function of the motor open circuit time constant. The frequency decay is primarily a function of the motor pre-transfer loading and inertia. The heavier the motor is loaded prior to the transfer, the faster the decay during the transfer. The lower the inertia of the motor and load equipment, the faster the decay.

Analysis of a bus transfer scheme involves determination of voltages and currents after the transfer. Some factors to consider when performing these studies are as follow:

a) All bus transfer studies
    1) Higher alternate source pre-transfer bus voltage gives higher inrush current.
    2) Higher alternate source pre-transfer bus voltage gives shorter motor reacceleration time.
    3) Motors should be modeled at actual load, or, if this data is unavailable, full load.
    4) Motor and load H constants[4] should be conservatively assumed.
    5) If another bus is already supplied from the alternate source, simultaneous or delayed starting of a motor or motors on its bus should be reviewed coincident with the bus transfer if it is possible that other loads could be started for the mode being analyzed.
    6) The decay of the motor bus voltage and frequency may result in operation of undervoltage or underfrequency relays on the bus or individual loads being transferred.
    7) The impact of the power factor of the loads being transferred should be considered. For example, seasonal changes resulting in large amounts of resistance heating could impact the overall bus power factor and bus transfer study results.
b) Fast bus transfer studies
    1) For fast transfer cases the maximum dead time should conservatively include the breaker’s timing tolerance.
    2) In fast transfer cases the phase angles of the normal source and alternate source bus voltages should be adjusted to achieve the worst case scenario when the alternate source breaker closes.
        i) This may involve assumptions about what initiated the bus transfer, i.e., system fault, unit out-of-step, etc.
        ii) This may also involve a review of the transmission switchyard supply, i.e., Did the cause of the unit trip result in splitting of the switchyard buses? If so, what is the impact to the alternate source bus voltage and phase angle?

[4] *H constant* (machine inertia constant) is a representation of the energy stored in the rotor when operating at synchronous speed. The units are in kilowatt-seconds per kilovolt-ampere rating of the machine. The H constant is based on inertia of the rotor plus load plus couplings. For the purpose of bus transfer, higher H constants result in slower voltage decay rates and lower H constants result in faster decay rates. Typical values for motors driving pumps are in the range of 0.4 and for large fans are 8.0.

Copyright The Institute of Electrical and Electronics Engineers, Inc.
Provided by IHS under license with IEEE
No reproduction or networking permitted without license from IHS Not for Resale

3) Consider the loss of the worst case motor on the transferring bus during the transfer. For fast transfer cases tripping a high inertia load results in more rapid frequency decay, which is the worst case.

c) Residual bus transfer studies

1) Consider the loss of the worst case motor on the transferring bus during the transfer. For residual transfer cases, tripping a low inertia load results in a slower decaying bus voltage and frequency that may be the worst case.

2) In residual transfer studies, the alternate source breaker should be closed when the alternate source supply voltage and the transferring motor bus voltage are 180° out of phase in order to consider the worst case.

C.4 Bus transfer protection issues

Assuming that the bus transfer schemes and protection system are properly designed and coordinated, the protection systems should not operate as a result of the transfer. However, consideration may be given to blocking automatic bus transfers for abnormal operating conditions such as bus differential relay operations and stuck breaker operations. When these abnormal conditions do not exist, one of the primary protection concerns is misoperation of protection systems resulting in unintentional loss of the alternate source to either the bus being transferred, a bus already being supplied by the alternate source, or both. In many nuclear plants, the bus or buses already supplied by the alternate source are Class 1E. Therefore, loss of power to the bus as a result of a bus transfer is undesirable.

C.4.1 Current transformer saturation

The common concern associated with bus transfer schemes and current transformer saturation is the misoperation of transformer differential relays. When current transformers are selected, consideration should be given to the maximum primary fault current available for the anticipated grid and auxiliary system conditions. The performance of the selected current transformer should then be confirmed for the maximum asymmetric fault current by means of current transformer performance application guides or calculation. The concern in the transformer differential relay case is that the high-side current transformers saturate and the low-side current transformers do not saturate. The differential relay senses a difference in high- and low-side VA flow and operates to clear an apparent fault in the transformer. The result is loss of the alternate source.

The impact of possible saturation of current transformers due to high inrush currents associated with the closing of the alternate source breaker should be evaluated. A similar phenomena is discussed in [C4]. The basic problem with current transformer saturation is that the current transformer secondary current may no longer be a true proportional representation of the primary current. The inrush currents associated with bus transfer may be higher than seen for individual motor starting. Therefore, the operation of the current transformers and connected relays would need to be reviewed.

C.4.2 Overcurrent relay coordination

The concern in the overcurrent relay case is that the phase overcurrent relays on the alternate source feeder (shown below the alternate source breaker in Figure C.1) might operate as a result of the bus transfer. If an instantaneous overcurrent element were in service, it might pick up on the inrush current associated with the transfer. In this case the setting of the instantaneous element must be set high enough that it does not operate for the worst case bus transfer inrush. The instantaneous setting of this relay is often based on a multiple of the largest single motor’s locked-rotor current and coordinated with the overcurrent protection of the feeders to individual loads fed from the bus being transferred. The bus transfer inrush may exceed this setting value. If these relays were not properly set, operation of the instantaneous device could result in tripping of the alternate source breaker for an otherwise acceptable bus transfer.

Copyright The Institute of Electrical and Electronics Engineers, Inc.
Provided by IHS under license with IEEE
No reproduction or networking permitted without license from IHS
Not for Resale

C.4.3 Undervoltage and underfrequency relays

An additional protection concern involves undervoltage relays. As mentioned earlier, the alternate source for the bus being transferred may already be supplying other loads. In the case of nuclear plants this may be a Class 1E bus. If the Class 1E bus were equipped with undervoltage relays, they would sense the voltage dip that occurs when the alternate source breaker closes. The recovery of the bus voltage needs to occur at a rate that does not result in actuation of the undervoltage relays. Otherwise, the result might be separation of this Class 1E bus from the power source which is not desirable.

The undervoltage and underfrequency relays may also appear on the auxiliary bus being transferred. In this case their operation could impact the successful transfer of certain loads. If critical loads were being transferred that were desirable to be available immediately after the transfer, the unintended operation of these relays may defeat the advantages of the automatic bus transfer.

C.5 Implementation of a bus transfer scheme using dynamic modeling

a) Build a computer model of the involved system:
   1) Develop distribution system impedance diagram;
   2) Model motors at actual load, or, if this data is unavailable, at full load;
   3) Typically, motors are predominately squirrel cage induction type.

b) Simulate bus transfer scenarios using computer models:
   1) Highest alternate source voltage gives highest inrush & V/hz;[5]
   2) Lowest alternate source voltage gives longest reacceleration time;
   3) Assume any single load on the transferring bus is tripped;
   4) Determine bus dead time based on normal and alternate source breakers operating times including worst case tolerances;
   5) Assume bus voltage is 180° out-of-phase with alternate source for residual transfer;
   6) Utilize the dynamic voltage, current, and frequency values determined from the analysis to review settings of protective devices.

c) Implement a recommended scheme.

d) Perform field testing of actual bus transfer scheme:
   1) Test bus voltage decay first;
   2) Verify relay operation and functional logic;
   3) Validate results from computer model;
   4) Determine any unintentional loss of loads during transfer.

e) Reverify or fine-tune analytical model:
   1) Adjust the model parameters to match the test conditions as closely as possible;
   2) Verify system voltage, phase angles, motor loading, breaker timing, etc.

[5]Historically, the acceptability criterion related to the motors being transferred was known as the 1.33 V/hz criterion. This first appeared in ANSI C50.41 and later in NEMA MG 1. The 1.33 V/hz criterion was related to the vector difference in the transferring motor bus residual voltage and the alternate source bus voltage at the instant of transfer. More recent papers have shown that the 1.33 V/hz criteria is not always reliable prediction of motor shaft torque (potential motor damage). As a result NEMA MG 1 has been revised to remove the 1.33 V/hz criterion (ANSI C 50.41 has been withdrawn). At the present time there is not a generic acceptability criterion. There are several papers [C1, C2] on proposed methods and research projects to determine a new acceptability criterion. Today utilities are faced with determining their own bus transfer acceptability limits.

Copyright The Institute of Electrical and Electronics Engineers, Inc.
Provided by IHS under license with IEEE
No reproduction or networking permitted without license from IHS Not for Resale

C.6 Bibliography

[C1] Daughterty, R. H., “Analysis of Transient Electrical Torques and Shaft Torques in Induction Motors as a Result of Power Supply Disturbances,” *IEEE Transactions on Power Apparatus and Systems*, vol. PAS-101, no. 8, pp. 2826–2834 (see discussion by Cummings), August 1982.

[C2] Htsui, J. S. C., “Magnitude, Amplitude and Frequencies of Induction-Motor Air Gap Transient Torques Through Simultaneous Reclosing Without Capacitors,” *IEEE Transactions on Power Apparatus and Systems*, vol. PAS-104, no. 6, pp. 1519–1525, June 1985.

[C3] IEEE Power System Relay Committee, “Motor Bus Transfer,” *IEEE Transactions on Power Delivery*, vol. 8, no. 4, pp. 1747–1758, October 1993.

[C4] IEEE Power System Relay Committee, “Relay Performance Considerations with Low Ratio CTs and High Fault Currents,” *IEEE Transactions on Power Delivery*, vol. 8, no. 3, pp. 884–897, July 1993.

Copyright The Institute of Electrical and Electronics Engineers, Inc.
Provided by IHS under license with IEEE
No reproduction or networking permitted without license from IHS Not for Resale

Annex D

(informative)

Use of high-speed magnetic circuit breakers for special applications

D.1 Purpose

This annex discusses the trip setting requirements of adjustable high-speed magnetic-only circuit breakers, also known as motor circuit protectors, to preclude inadvertent tripping during bus transfer, and motor jogging and plugging operations. The capability of the load equipment to withstand these operating modes is assumed to have been determined to be acceptable and is not included in this discussion.

For the purpose of this annex, high-speed breakers are defined as those capable of sensing and clearing faults within one cycle or less.

The time-current curves of the magnetic-only and thermal-magnetic types of circuit breakers are compared to provide a better understanding of their performance characteristics for motor feeder circuit fault protection.

D.2 Discussion

Short circuit protection devices in alternating current motor circuits consist of either thermal-magnetic or magnetic-only circuit breakers. In combination motor starters the magnetic circuit breaker and the thermal overload relay share a common enclosure. The magnetic trip setting of adjustable high speed magnetic-only circuit breakers, also known as motor circuit protectors, requires special considerations. The following discussion assumes that all other circuit breaker parameters, such as trip and interrupting ratings, are correctly chosen.

Ordinarily, spurious trips resulting from circuit switching transients are avoided by selecting an instantaneous trip setting equal to approximately two times the motor nominal locked-rotor current. This conventional basis for trip setting adequately accounts for effects such as manufacturing tolerances (± 20%), system asymmetry (50%), and over-voltage (10%).

However, a setting in this range can produce inadvertent tripping during bus transfer, jogging, and plugging operations resulting from the additional applied voltages that these operations may produce. Depending on the application, in order to avoid spurious tripping, the instantaneous trip setting on high-speed magnetic-only breakers may need to be set as high as twice the conventional value, i.e., 4–5 times the motor locked-rotor current. However, the setting should be reviewed to ensure that the thermal damage curves of the protected equipment (e.g., cable, penetration, motor) has not been compromised and that the setting is lower than the available short circuit current at the load.

For breakers with a low trip rating (e.g., 3 A and 7 A), the control circuit inrush current can be a significant portion of the breaker setting. The setting should be high enough to ensure that spurious tripping does not occur.

When selected in this manner, settings may exceed conventional guidelines for instantaneous trip settings (maximum 1300% of motor full load current) in favor of completing the equipment safety function. However, it can be shown that with low trip rating magnetic-only breakers (3 A, 7 A, and 15 A), an

Copyright The Institute of Electrical and Electronics Engineers, Inc.
Provided by IHS under license with IEEE
No reproduction or networking permitted without license from IHS Not for Resale

instantaneous trip setting selected on the basis of 4–5 times motor nominal locked-rotor current provides greater motor circuit fault protection than possible with non-adjustable thermal-magnetic circuit breakers.

It can readily be seen from Figure D.1 that the magnetic trip region of a typical 15 A non-adjustable thermal-magnetic circuit breaker is 12–50 times the breaker trip rating (1).[6] For example, in the case of a 15 A thermal-magnetic circuit breaker, which is the smallest standard size, magnetic actuation begins at currents as low as 180 A or as high as 750 A (1). This indicates the use of a 15 A thermal-magnetic circuit breaker in a motor circuit with motor full-load current less than 14 A may not meet conventional magnetic trip setting criterion.

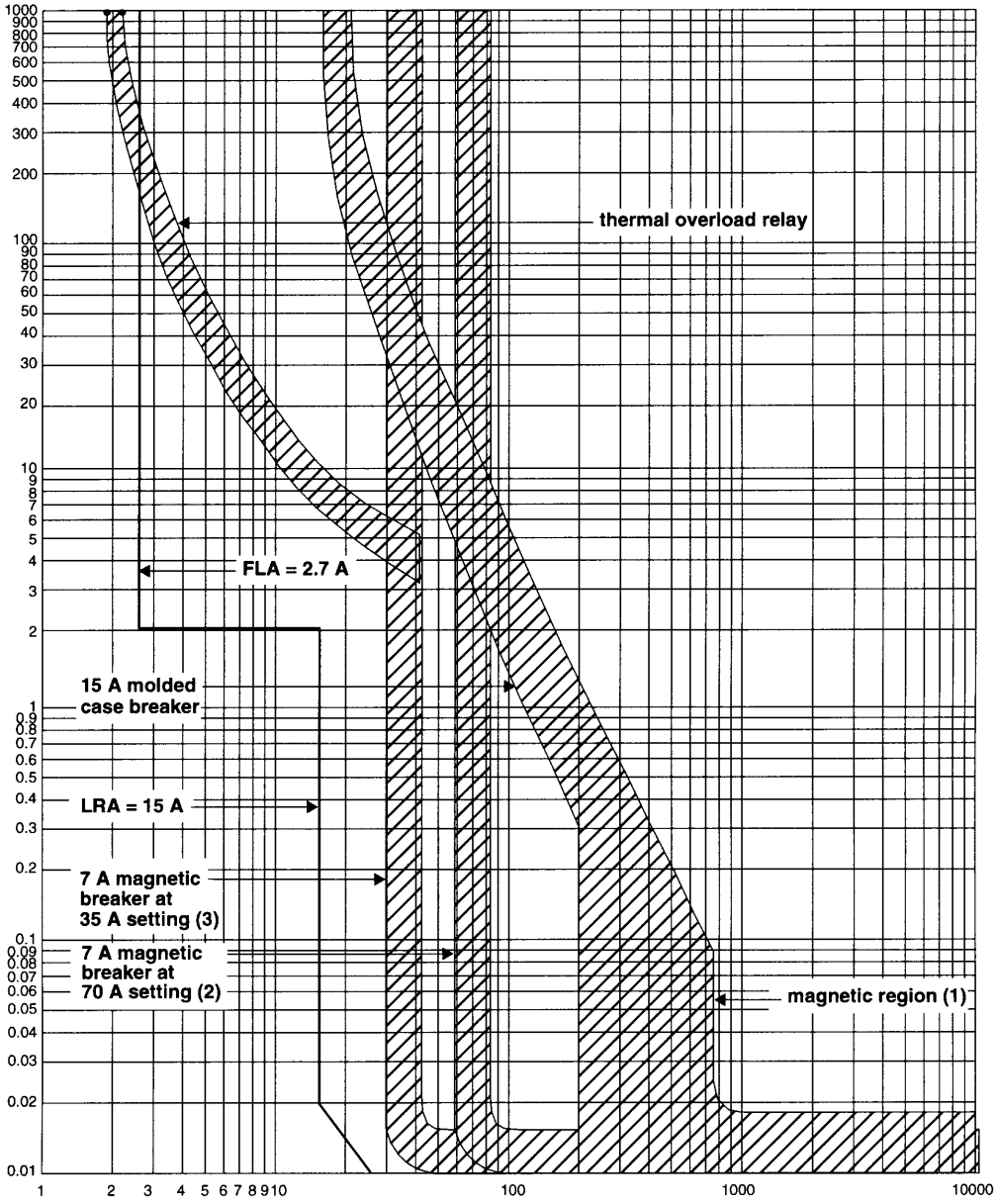

Figure D.1—Typical motor operated valve protection options

[6]Numbers in parentheses refer to corresponding points in Figure D.1.

Copyright The Institute of Electrical and Electronics Engineers, Inc.
Provided by IHS under license with IEEE
No reproduction or networking permitted without license from IHS
Not for Resale

Many valve actuator motors in nuclear generating plants have nameplate full load currents below 12 A. It can be seen from Figure D.1 that the use of adjustable magnetic-only breakers for fault protection of small motor circuits offers several advantages. Figure D.1 shows the advantages when a 1 horsepower motor circuit uses a 7 A magnetic-only breaker rather than a 15 A thermal-magnetic breaker for short-circuit protection.

These advantages are as follows:

a) Greater motor circuit fault protection than possible with currently available thermal-magnetic circuit breakers. Note that a 7 A magnetic-only breaker, set at 70 A will trip at a maximum of 100 A (2), whereas a non-adjustable 15 A thermal-magnetic breaker may not trip in its magnetic region until 750 A (1). This difference would be even greater where circuit operation would have permitted the trip setting to be set at 35 A which is twice motor locked-rotor current (3).

b) Interrupting low magnitude short circuit faults by circuit breaker action provides greater protection against equipment damage in general, and the protection of TORs against misapplication as fault interrupters in particular.

Copyright The Institute of Electrical and Electronics Engineers, Inc.
Provided by IHS under license with IEEE
No reproduction or networking permitted without license from IHS Not for Resale