IEEE Guide for the Reclamation of Insulating Oil and Criteria for Its Use

Sponsor
Transformers Committee
of the
IEEE Power Engineering Society

Approved March 13, 1986
Reaffirmed December 10, 2002

IEEE Standards Board

Approved November 17, 1986
Reaffirmed October 26, 1992

American National Standards Institute

© Copyright 1985 by

The Institute of Electrical and Electronics Engineers, Inc

345 East 47th Street, New York, NY 10017, USA

No part of this publication may be reproduced in any form, in an electronic retrieval system or otherwise, without the prior written permission of the publisher.

--`,,`-`-`,,`,,`,`,,`---

Copyright The Institute of Electrical and Electronics Engineers, Inc.
Provided by IHS under license with IEEE
No reproduction or networking permitted without license from IHS

Not for Resale

IEEE Standards documents are developed within the Technical Committees of the IEEE Societies and the Standards Coordinating Committees of the IEEE Standards Board. Members of the committees serve voluntarily and without compensation. They are not necessarily members of the Institute. The standards developed within IEEE represent a consensus of the broad expertise on the subject within the Institute as well as those activities outside of IEEE which have expressed an interest in participating in the development of the standard.

Use of an IEEE Standard is wholly voluntary. The existence of an IEEE Standard does not imply that there are no other ways to produce, test, measure, purchase, market, or provide other goods and services related to the scope of the IEEE Standard. Furthermore, the viewpoint expressed at the time a standard is approved and issued is subject to change brought about through developments in the state of the art and comments received from users of the standard. Every IEEE Standard is subjected to review at least once every five years for revision or reaffirmation. When a document is more than five years old, and has not been reaffirmed, it is reasonable to conclude that its contents, although still of some value, do not wholly reflect the present state of the art. Users are cautioned to check to determine that they have the latest edition of any IEEE Standard.

Comments for revision of IEEE Standards are welcome from any interested party, regardless of membership affiliation with IEEE. Suggestions for changes in documents should be in the form of a proposed change of text, together with appropriate supporting comments.

Interpretations: Occasionally questions may arise regarding the meaning of portions of standards as they relate to specific applications. When the need for interpretations is brought to the attention of IEEE, the Institute will initiate action to prepare appropriate responses. Since IEEE Standards represent a consensus of all concerned interests, it is important to ensure that any interpretation has also received the concurrence of a balance of interests. For this reason IEEE and the members of its technical committees are not able to provide an instant response to interpretation requests except in those cases where the matter has previously received formal consideration.

Comments on standards and requests for interpretations should bev addressed to:

Secretary, IEEE Standards Board
345 East 47th Street
New York, NY 10017
USA

--`,,`-`-`,,`,,`,`,,`---

Copyright The Institute of Electrical and Electronics Engineers, Inc.
Provided by IHS under license with IEEE
No reproduction or networking permitted without license from IHS
Not for Resale

Foreword

(This Foreword is not a part of IEEE Std 637-1985, IEEE Guide for the Reclamation of Insulating Oil and Criteria for Its Use.)

This guide was prepared by the Subcommittee on Insulating Fluids of the Transformers Committee of the IEEE Power Engineering Society. The membership of this subcommittee was as follows:

H. A. Pearce, *Chair*

D. J. Allan
L. Baranowski
J. G. Bryant
N. Burns
R. A. Burns
J. Corkran
D. W. Crofts
B. Cupples
D. H. Douglas
J. A. Fidinger
H. A. Forster
R. M. Frey
M. Frydman
J. P. Germain
D. A. Gillies
F. J. Gryszkiewicz
T. J. Haupert
F. W. Henrichs
P. J. Hoefler
T. Hunt
B. G. Hunter
O. Keller
J. J. Kelly
T. G. Lipscomb
R. I. Lowe
G. G. McCrae
K. McManamon
C. K. Miller
R. E. Minkwitz, Sr
E. L. Morrison
V. R. Muhall
R. J. Musil
W. M. Mutchler, Jr
S. D. Northrup
T. Orbeck
L. L. Preston
C. P. Raymond
T. O. Rouse
L. J. Savio
G. J. Schreuders
J. A. Thompson
R. M. Vincent
L. Wagenaar
F. N. Young

The Transformers Committee of the IEEE Power Engineering Society balloted and approved this standard. The membership of the Transformers Committee was as follows:

W. J. McNutt, *Chair*
L.J. Savio, *Vice Chair*
D.A. Yannucci, *Secretary*

E.J. Adolphson
L.C. Aicher
J. Alacchi
D.J. Allan
B.F. Allen
R. Allustriarti
R.J. Alton
L Ananian
S.J. Antalis
E.H. Arjeski
J.C. Arnold
R. Bancroft
G.M. Bell
P.L. Bellaschi
J.J. Bergeron
J.V. Bonucchi
J.D. Borst
G.H. Bowers
F.J. Brutt
D.F. Buchanan
D.J. Cash
O. Compton
F.W. Cook
J. Corkran
M.G. Daniels
R.C. Degeneff
J.E. Dind
D.H. Douglas
J.D. Douglass
D.A. Duckett
J.C. Dutton
J.K. Easley
E.C. Edwards
C.G. Evans
P. Falkowski
W.R. Farber
H.G. Fischer
J.A. Forster
S.L. Foster
M. Frydman
H.E. Gabel
C.M. Gardam
D.A. Gillies
A.W. Goldman
J.C. Gorub
W.F. Griffard
R.L. Grubb
G. Gunnels
G.H. Hall
J.L. Harbell
T.K. Hawkins
F.W. Heinrichs
C. Hendrickson
J.J. Herrera
K.R. Highton
C.C. Honey
E.L. Hook
C. Hurty
G.W. Iliff
E.T. Jauch
D.C. Johnson
D.P. Kappeler
R.B. Kaufman*
O. Keller
E.J. Kelley*
J.J. Kelly

--`,,`-`-`,,`,,`,`,,`---

Copyright The Institute of Electrical and Electronics Engineers, Inc.
Provided by IHS under license with IEEE
No reproduction or networking permitted without license from IHS
Not for Resale

A.D. Kline	H.E. Mills	A.L. Tanton
T.S. Lauber	R.E. Minkwitz	R.C. Thomas
H.F. Light	H.P. Moser	F.W. Thomason
C. Lindsay	R.J. Musil	T.P. Traub
T.G. Lipscomb	W.H. Mutschler	E.F. Troy
A.M. Lockie*	E.T. Norton	D.E. Truax
L.W. Long	R.A. Olsson	R.E. Uptegraff
R.I. Lowe	J.H. Ottevangers	S. Vargo
M.L. Manning	H.A. Pearce	R.A. Veitch
H.B. Margolis	L.L. Preston	F.J. Vogel*
D.E. Massey	D.A. Roach	J.P. Vora
J.W. Matthews	R.L. Schmid	J.W. Walton
L.S. McCormick	B.E. Smith	E.H. Wendt *
G.G. McCrae	L.R. Smith	R.J. Whearty
C.J. McMillen	W.W. Stein	S.A. Wiencek
S.P. Mehta	L.R. Stenslund	A. Wilks
N.J. Melton	R.B. Stetson	J.R. Woodall
C.I. Miller	F.R. Stockum	W.E. Wrenn
C.H. Millian	D. Takach	A.C. Wurdack

*Member emeritus

When the IEEE Standards Board approved this guide on March 11, 1982, it had the following membership:

Irvin N. Howell, Jr, *Chair*
Irving Kolodny, *Vice Chair*
Sava I. Sherr, *Secretary*

G. Y. R. Allen	Len S. Corey	A. R. Parsons
J. J. Archambault	D. C. Fleckenstein	John P. Riganati
James H. Beall	Jay Forster	Robert W. Seelbach
John T. Boettger	Kurt Greene	Jay A. Stewart
J. V. Bonucchi	Joseph L. Koepfinger	Clifford O. Swanson
Edward Chelotti	John E. May	Robert E. Weiler
Edward J. Cohen	Donald T. Michael *	

* Member emeritus

--`,,`-`-`,,`,,`,`,,`---
Copyright The Institute of Electrical and Electronics Engineers, Inc.
Provided by IHS under license with IEEE
No reproduction or networking permitted without license from IHS
Not for Resale

CLAUSE PAGE

1. Introduction 1

2. Scope 1

3. Definitions 2

4. References 3

5. Classification of Service-Aged Oils and Criteria for Reuse 4

5.1 General Classification of Service-Aged Oils 4
5.2 Suggested Limits for Classes of Service-Aged Oils 5
5.3 Economic Factors 7
5.4 Sources of Oil to Be Reclaimed 7
5.5 Precautions 8
5.6 Criteria for Reuse of Reclaimed Oil 8

6. Types of Reconditioning and Reclamation Processes 10

6.1 Gases and Water—Vacuum Dehydration 10
6.2 Water and Solids 11
6.3 Adsorption of Soluble Contaminants 12
6.4 Types of Pressure Percolation 15
6.5 Activated Carbon Sodium Silicate Process 18
6.6 Reclamation by Trisodium Phosphate 18
6.7 Modern, Oil-Reclamation Systems 18
6.8 Locations 20
6.9 Choice of Methods 20

7. Oil Tests and Their Significance 21

Annex A (Informative) Bibliography 25

--`,,`-`-`,,`,,`,`,,`---

Copyright The Institute of Electrical and Electronics Engineers, Inc.
Provided by IHS under license with IEEE
No reproduction or networking permitted without license from IHS Not for Resale

--`,-`-`,,`,,`,`,,`---

Copyright The Institute of Electrical and Electronics Engineers, Inc.
Provided by IHS under license with IEEE
No reproduction or networking permitted without license from IHS

Not for Resale

IEEE Guide for the Reclamation of Insulating Oil and Criteria for Its Use

1. Introduction

The purpose of this guide is to further oil conservation by providing detailed procedures for reclaiming used mineral insulating oils by chemical and mechanical means, making them suitable for reuse as insulating fluids. The guide describes the essential properties required for reuse in each class of equipment and the recommended test methods. The purpose of ANSI/IEEE C57.106-1977 [24][1] is to aid the operator of the electric power equipment to evaluate the serviceability of new, unused transformer oil contained in new equipment, or as received from the refiner for filling new equipment. The recommendations and tests in ANSI/IEEE C57.106-1977 [24] are intended also to provide the operator with good estimates of the continued reliability of the oil in service in equipment and guidance for the reconditioning of oil by mechanical means. These estimates in turn suggest minimum property limits for restoring used oils to as near theft original condition as possible utilizing current techniques.

The greatest benefit derived from widespread reclamation may be in the substitution of suitably reclaimed oil for large quantities of new oil which are normally required in service for maintenance or makeup oil. This will free a considerable volume of new oil for use in new apparatus. In this respect, it is proper to state that even though the functional oil tests in use today measure certain key oil properties considered critical to their application, there is evidence that service aged and reclaimed oils do not contain all of the desirable natural components and may contain materials not found in new oil. It is not the intention of this guide to suggest that reclaimed oils are equivalent to new oils; rather this guide seeks to expand the use of reclaimed oils to occupy the considerable volume for which they are entirely suitable.

2. Scope

The scope of this guide covers mineral insulating oil commonly defined as transformer oil; definition and description of reclaiming procedures; the test methods used to evaluate the progress and end point of the reclamation process, and what criteria recommended for the use of reclaimed oils are considered suitable. This guide does not cover the use of oil in new apparatus under warranty.

[1]The numbers in brackets correspond to those of the references listed in Section 4. of this guide.

Copyright © 1985 IEEE All Rights Reserved

Copyright The Institute of Electrical and Electronics Engineers, Inc.
Provided by IHS under license with IEEE
No reproduction or networking permitted without license from IHS
Not for Resale

3. Definitions

The definitions contained in this guide pertain to terms that are used in conjunction with electrical insulating fluids and are consistent with general usage (see ANSI/ASTM D2864-84 [21]).

additive: A chemical compound or compounds added to an insulating fluid for the purpose of imparting new properties or altering those properties which the fluid already has.

antioxidant: *See:* **oxidation inhibitor**

askarel: A generic term for a group of synthetic, fire-resistant, chlorinated aromatic hydrocarbons used as electrical insulating liquids. They have a property under arcing conditions so that any gases produced will consist predominantly of noncombustible hydrogen chloride with lesser amounts of combustible gases.

The following trade names are some of the titles which have been used to identify askarels containing polychlorinated biphenyls (PCBs).

Aroclor	Elemex
Chlorextol	Hyvol
Chlorphen	Inerteen
Diaclor	Noflamol
Dykanol	Pyranol

inhibitor: Any substance that when added to an electrical insulating fluid retards or prevents undesirable reactions.

oxidation inhibitor: Any substance added to an insulating fluid to improve its resistance to deleterious attack in an oxidizing environment. For example, 2, 6-ditertiary-butyl para-cresol or 2, 6-ditertiary-butyl phenol, or both, are sometimes added to petroleum insulating oil to improve its oxidation stability.

PCB: *See:* **askarel**

reclamation: The restoration to usefulness by the removal of contaminants and products of degradation such as polar, acidic, or colloidal materials from used electrical insulating liquids by chemical or adsorbent means.

NOTE — The methods listed under reconditioning are usually performed in conjunction with reclaiming. Reclaiming typically includes treatment with clay or other adsorbents.

re-refining: The use of primary refining processes on used electrical insulating liquids to produce liquids that are suitable for further use as electrical insulating liquids.

NOTE — Techniques may include a combination of distillation and acid, caustic solvent, clay or hydrogen treating, and other physical and chemical means.

reconditioning: The removal of insoluble contaminants, moisture, and dissolved gases from used, electrical insulating liquids by mechanical means.

NOTE — The typical means employed are settling, filtering, centrifuging, and vacuum drying or degassing.

silicone oil: A generic term for a family of relatively inert liquid organosiloxane polymers used as electrical insulation.

Copyright © 1985 IEEE All Rights Reserved

Copyright The Institute of Electrical and Electronics Engineers, Inc.
Provided by IHS under license with IEEE
No reproduction or networking permitted without license from IHS Not for Resale

4. References

When the following American National Standards referred to in this guide are superseded by a revision approved by the American National Standards Institute, Inc, the latest revision shall apply.

[1] ANSI/ASTM D88-56 (R1973), Standard Test Method for Saybolt Viscosity.[2,3]

[2] ANSI/ASTM D92-78, Standard Test Method for Flash and Fire Points by Cleveland Open Cup.

[3] ANSI/ASTM D97-66 (R1978), Standard Test Method for Pour Point of Petroleum Offs.

[4] ANSI/ASTM D445-83, Standard Test Method for Kinematic Viscosity of Transparent and Opaque Liquids (And the Calculation of Dynamic Viscosity).

[5] ANSI/ASTM D831-63 (R1978), Standard Test Method for Gas Content of Cable and Capacitor Offs.

[6] ANSI/ASTM D877-80, Standard Test Method for Dielectric Breakdown Voltage of Insulating Liquids Using Disk Electrodes.

[7] ANSI/ASTM D892-74 (R1979), Standard Test Method for Foaming Characteristics of Lubricating Oils.

[8] ANSI/ASTM D971-82, Standard Test Method for Interfacial Tension of Off Against Water by the Ring Method.

[9] ANSI/ASTM D974-80, Standard Test Method for Neutralization Number by Color-Indicator Titration.

[10] ANSI/ASTM D1298-80, Standard Test Method for Density, Relative Density (Specific Gravity), or API Gravity of Crude Petroleum and Liquid Petroleum Products by Hydrometer Method.

[11] ANSI/ASTM D1473-80, Standard Test Method for 2, 6-Ditertiary-Butyl Para-Cresol in Electrical Insulating Oils.

[12] ANSI/ASTM D1500-82, Standard Test Method for ASTM Color of Petroleum Products (ASTM Color Scale).

[13] ANSI/ASTM D1524-69 (R1979), Standard Method for Visual Examination of Used Electrical Insulating Oils of Petroleum Origin in the Field.

[14] ANSI/ASTM D1533-79, Standard Specification for Synthetic Rubber Insulation for Wire and Cable, 90 ^{o}C Operation.

[15] ANSI/ASTM D1534-78, Standard Test Method for Approximate Acidity of Used Electrical Insulating Liquids by Color Indicator Titration.

[16] ANSI/ASTM D1816-79, Standard Test Method for Dielectric Breakdown of Insulating Offs of Petroleum Origin Using VDE Electrodes.

[17] ANSI/ASTM D1827-64 (R1979), Standard Test Method for Gas Content (Nonacidic) of Insulating Liquids by Displacement with Carbon Dioxide.

[18] ANSI/ASTM D2161-82, Standard Method for Conversion of Kinematic Viscosity to Saybolt Universal Viscosity or to Saybolt Furol Viscosity.

[2]ANSI publications are available from the Sales Department, American National Standards Institute, 1430 Broadway, New York, NY 10018.
[3]ASTM publications are available from the American Society for Testing and Materials, 1916 Race St, Philadelphia, PA 19103.

Copyright © 1985 IEEE All Rights Reserved

Copyright The Institute of Electrical and Electronics Engineers, Inc.
Provided by IHS under license with IEEE
No reproduction or networking permitted without license from IHS
Not for Resale

[19] ANSI/ASTM D2285-68 (R1978), Standard Test Method for Interfacial Tension of Electrical Insulating Offs of Petroleum Origin Against Water by the Drop-Weight Method.

[20] ANSI/ASTM D2668-77, Standard Test Method for 2, 6-Ditertiary-Butyl Para-Cresol and 2, 6-Ditertiary-Butyl Phenol in Electrical Insulating Oil by Infrared Adsorption.

[21] ANSI/ASTM D2864-84, Standard Definitions of Terms Relating to Electrical Insulating Liquids and Gases.

[22] ANSI/ASTM D2945-71 (R1980), Standard Test Method for Gas Content of Insulating Oils.

[23] ANSI/ASTM D3612-79, Standard Method for Analysis of Gases Dissolved in Electrical Insulating Oil by Gas Chromatography.

[24] ANSI/IEEE C57.106-1977 IEEE Guide for Acceptance and Maintenance of Insulating Oil in Equipment.[4]

[25] ASTM D924-82, Standard Test Method for Power Factor and Dielectric Constant of Electrical Insulating Liquids.

[26] ASTM D1817-81, Standard Method of Testing Rubber Chemicals—Density.

[27] ASTM D2112-81, Standard Testing Method for Oxidation Stability of Inhibited Mineral Insulating Oil by Rotating Bomb.

[28] ASTM D2440-83, Standard Testing Method for Oxidation Stability of Mineral Insulating Oil.

[29] ASTM D3487-82, Standard Specification for Mineral Insulating Oil Used in Electrical Apparatus.

[30] ASTM D4059-83, Standard Method for Analysis of Polychlorinated Biphenyls in Mineral Insulating Offs by Gas Chromatography.

[31] 40 CFR, Part 761, Environmental Protection Agency.[5]

5. Classification of Service-Aged Oils and Criteria for Reuse

5.1 General Classification of Service-Aged Oils

The functional limits of oil properties in different apparatus vary with the type and design so that the acceptable limits for oils that can remain in service are dependent upon the requirements of the specific apparatus. It is therefore impossible to indicate the significance of specific tests and recommended test limits for all possible existing applications of insulating oil in service. It should also be recognized that no one test can be used as the sole criterion of the condition of oil in service. It is possible, however, to summarize the value and importance of current tests and to suggest methods of treatment for the oil being examined, such methods being based on current industry experience. Oils in service may be placed in the following classifications based upon the evaluation of the following significant characteristics:

1) *Group I*. Oils that are in satisfactory condition for continued use
2) *Group II*. Oils that required only reconditioning for further service
3) *Group III*. Oil in poor condition. Such oil should be reclaimed or disposed of depending upon economic considerations
4) *Group IV*. Oils in such poor condition that it is technically advisable to dispose of them

[4]IEEE publications are available from IEEE Service Center, 445 Hoes Lane, Piscataway, NJ 08854.
[5]CFR publications are available from Superintendent of Documents, US Government Printing Office, Washington, DC 20402.

Copyright © 1985 IEEE All Rights Reserved

--`,,`,,`-`-`,,`,,`,`,,`---

Copyright The Institute of Electrical and Electronics Engineers, Inc.
Provided by IHS under license with IEEE
No reproduction or networking permitted without license from IHS Not for Resale

5.2 Suggested Limits for Classes of Service-Aged Oils

Suggested test limits by voltage class for oils in power transformers to remain in continued service [5.1(1), Group I] are given in Table 1. It is not intended that oil be removed from service when a single property limit is exceeded or that the oil be left in service until all property values are outside the stated limits. *Each case shall be examined individually and manufacturer's advice may be considered.*

Oils that do not meet the suggested limits for continued service in their respective voltage classes may be considered for reuse in similar apparatus operating at a lower voltage class if they meet the limits for that class, or they may be suitable for reconditioning (Group II) or reclamation (Group III). Suggested limits for oils in these groups are contained in Table 2. Oils that do not meet the suggested limits for Group III should be discarded unless the reclamation process in use can restore the oils to the limits given in Tables 3 and 4.

Table 1— Suggested Limits for In-Service Oils Group I by Voltage Class

Property	Limit			ASTM Test Method
Voltage Class	69 kV and Below	Above 69V Through 288 kv	345 kV and Above	
Dielectric breakdown voltage, 60 Hz, 0.100 gap 1 min, kV, min	26	26	26	D877 [6]
Dielectric breakdown voltage, 0.040 gap, kV, min	23	26	26	D1816 [16]
Dielectric breakdown voltage, 0.080 gap, kV, min	34	45	45	D1816 [16]
Neutralization number max, mg KOH/g	0.2	0.2	0.1	D974 [9]
Interfacial tension, min, mN/m	24	26	30	D971 [8]
Water max, ppm*	35	25	20	D1533 [14]
Gas content when specified, max %	†	†	†	D831 [5] D1847 [26] or D2945 [22]

*Does not pertain to free breathing transformer or compartment.
†Some transformers are equipped with diaphragms to prevent the introduction of air. The dissolved gas content in these transformers should be maintained in accordance with the manufacturer's recommended limit.

Table 2— Suggested Limits for Oil to Be Reconditioned or Reclaimed

Property	Group II	Group III	ASTM Test Method
Neutralization number max, mg KOH/g	0.2	0.5	D974 [9]
Interfacial tension, min, mN/m	24	16	D971 [8]

The most appropriate method for disposal of rejected oils will depend upon local conditions and the volume of oil to be discarded. In all cases caution should be exercised to ensure that the disposal method is in compliance with the Environmental Protection Agency (EPA) and local regulations.

Copyright © 1985 IEEE All Rights Reserved

Copyright The Institute of Electrical and Electronics Engineers, Inc.
Provided by IHS under license with IEEE
No reproduction or networking permitted without license from IHS
Not for Resale

Table 3— Suggested Property Requirements of Reclaimed Oil for Transformers

Property	Limit	ASTM Test Methods
Physical		
Flash point, min, °C	140*	D92 [2]
Pour point, min, °C	–40†	D97 [3]
Specific gravity, 15 /15 °C, max	0.91	D1298 [10]
Viscosity, max, cSt at 40 °C (mm^2/s)	12.0	D88 [1] or D445 [4]
Color max	1.5	D1500 [12]
Visual examination	Clear	D1524 [13]
Interfacial tension, min, mN/m	35	D971 [8]
Electrical		
Dielectric breakdown voltage, 60 Hz, kV, min	30	D877 [6]
Power factor at 60 Hz, 100 °C, max, %	1	D924 [25]
Chemical		
Neutralization number, max, mg KOH/g	0.05	D974 [9]
Oxidation inhibitor, max %, by wgt	0.3	D2668 [20]
Oxidation stability, min, minutes	150	D2112 [27]
Oxidation stability 164 h % sludge, max	 0.25	D2440 [28]
Total acid no, max, mg KOH/8	0.50	
Water max, ppm	35	D1533 [14]

*145 °C flash point may be desired for 65 °C rise transformers.
†In certain sections of the United States and Canada, it is common practice to specify a lower or higher pour point, depending upon climatic conditions.

Copyright © 1985 IEEE All Rights Reserved

--`,,`-`-`,,`,,`,`,,`---

Copyright The Institute of Electrical and Electronics Engineers, Inc.
Provided by IHS under license with IEEE
No reproduction or networking permitted without license from IHS Not for Resale

Table 4— Suggested Test Limits for Reclaimed Oil in Transformers and Reactors After Filling but Before Energizing

Property	Limit			ASTM Test Methods
Voltage Class	69 kV and Below	Above 69 kV Through 288 kV	345 kV and Above	
Dielectric breakdown voltage, 60 Hz, kV, min	30	35	35	D877 [6]
Dielectric breakdown voltage, 60 Hz, kV, min 0.040 gap	26	26	26	D1816 [16]
Desirable, kV	30	30	30	D1816 [16]
Neutralization number max, mg KOH/g	0.05	0.05	0.05	D974 [9]
Interfacial tension, min, mN/m	35	35	35	D971 [8]
Water max, ppm	35	20	15 (10 desirable)	D1533 [14]
Gas content when specified, max %	*	*	*	D831 [5] D1817 [26] or D2945 [22]
Color, max	1.5	1.5	1.5	D1500 [12]
Condition-visual	Clear	Clear	Clear	D1524 [13]

*Some transformers are equipped with diaphragms to prevent the introduction of air. The dissolved gas content in these transformers should be maintained in accordance with the manufacturer's recommended limits.

5.3 Economic Factors

The cost of reconditioning or reclaiming oils by various users will vary significantly and is dependent upon the type of system, field inspection operations, and laboratory and shop facilities. In determining whether or not reconditioning or reclaiming of insulating oil, or both, are economically justifiable, a number of factors shall be considered. Some of these factors are as follows:

1) Cost of materials
2) Disposition of service-aged or contaminated materials, or both
3) Total cost of process versus quality of end product
4) Equipment maintenance and amortization
5) Cost of collection and storage of oil
6) Labor and transportation costs
7) Laboratory costs
8) Cost and availability of new oil versus cost of reprocessed oil
9) Loss of oil during reprocessing
10) Cost and availability of oxidation inhibitors and cost of blending process
11) Value of service-aged oil when used for some other purpose

The economic justification of whether reconditioning or reclamation work, or both, are performed by company personnel or contractors shall be resolved on the basis of the factors applicable in each particular case.

5.4 Sources of Oil to Be Reclaimed

Service-aged insulating oils generally contain contaminants as the result of their decomposition, or derived from the construction materials of the apparatus. The reclamation process may not adequately remove these contaminants and may also remove some of the desirable natural components found in new oil. Furthermore, any adverse effects due to

Copyright © 1985 IEEE All Rights Reserved

Copyright The Institute of Electrical and Electronics Engineers, Inc.
Provided by IHS under license with IEEE
No reproduction or networking permitted without license from IHS Not for Resale

the contaminants may not be demonstrated by standard laboratory tests. It is therefore recommended that reclaimed oil not be used in new equipment under warranty unless agreed to by the manufacturer and the user.

Suggested sources of oil for reclamation include transformers, reactors, voltage regulators, circuit breakers, and reclosers. Oil from cables, capacitors, generators, or devices filled with non-mineral oil are not recommended for reclaiming. It is common practice to collect and store reclaimable oil from a variety of sources until a sufficient quantity is accumulated to reclaim as a batch. The nature of contaminants remaining in such pooled oil after reclamation is much more unpredictable than those from a single source, so the reuse of this pooled oil should be restricted to apparatus with less stringent oil requirements.

5.5 Precautions

Care shall be taken in the selection of oil for reclaiming so that it is not contaminated with any of the following substances:

5.5.1 Askarel

Oil containing askarel with PCBs shall be handled in accordance with Federal Regulation 40 CFR, Part 761 [31] and local regulations where applicable.

5.5.2 Silicone Fluids

Oil containing traces of silicone fluids can foam excessively and therefore should not be reclaimed.

5.5.3 Other Fluids

Fluids with original properties not conforming to ASTM D3487-82 [29] should not be pooled.

5.5.4 Suspended Carbon

Oil containing significant amounts of suspended carbon should generally be processed separately.

5.6 Criteria for Reuse of Reclaimed Oil

5.6.1 Makeup or Replacement Oil for Transformers and Reactors Which Are Out of Warranty

Oil in transformers and reactors are usually subjected to elevated operating temperatures and deteriorate primarily by oxidation. This can result in the lowering of dielectric properties and interfacial tension, an increase in neutralization number, and the formation of sludge. The rate of deterioration varies in different apparatus depending upon factors such as temperature, the availability of oxygen, and variations in materials of construction.

Oil from transformers and reactors, unlike oil from oil circuit breakers, generally does not contain carbon or other products resulting from the arcing process. Therefore, oil to be reclaimed for use in transformers or reactors should, for the most part, only be from the apparatus to be filled or from similar apparatus. Oil from transformers or reactors containing significant quantities of arced products, oil from oil circuit breakers, and pooled oils should generally not be reclaimed for use in transformers and reactors.

The rate of oil oxidation in transformers and reactors varies, so it is usually desirable to add an oxidation inhibitor to reclaimed oil. In concentrations up to 0.3% by weight, to extend the life of the oil, 2, 6-ditertiary-butyl para-cresol and 2, 6-ditertiary-butyl phenol have been used.

Suggested requirements for reclaimed oil for use in transformers and reactors are given in Table 3.

Copyright © 1985 IEEE All Rights Reserved

Copyright The Institute of Electrical and Electronics Engineers, Inc.
Provided by IHS under license with IEEE
No reproduction or networking permitted without license from IHS Not for Resale

Table 5— Suggested Test Limits for Reclaimed Oil in Circuit Breakers, Reclosers, and Load Tap Changing Compartments After Filling, but Before Energizing

Property	Limit	ASTM Test Methods
Physical		
Flash point, min, °C	140	D92 [2]
Pour point, min, °C	–40*	D97 [3]
Viscosity, max, cSt at 40 °C (mm^2/s)	12.0	D88 [1] or D445 [4]
Color max	2.0	D1500 [12]
Interfacial tension at 25 °C, min, mN/m	25	D971 [8]
Electrical		
Dielectric breakdown voltage 60 Hz,	30	D877 [6]
kV, min	26	D1816 [16]
Chemical		
Neutralization number max, mg KOH/g	0.15	D974 [9]

* In certain sections of the United States and Canada, it is common practice to specify a lower or higher pour point, depending upon climatic conditions.

Properly reclaimed oil meeting the minimum requirements of Table 3 may contain excessive quantities of water and dissolved gases for use in some transformers and reactors and should, therefore, be subjected to additional processing during filling, such as vacuum dehydration if required, to comply with the apparatus manufacturer's specification limits for water. Suggested limits for oil after filling but before energizing, at various voltage classes, are given in Table 4.

5.6.2 Makeup or Replacement Oil for Oil Circuit Breakers

The requirements of insulating oil for use in oil circuit breakers are different from those for insulating oil in transformers. See Table 5. Modern, oil circuit breakers require low viscosity, low pour-point oil since a large percentage of them are used outdoors and, in many cases, at low temperatures. All circuit breakers are free breathers (open to the atmosphere through a breathing device) which allows the admittance of humid air. In the case of older circuit breakers where use of high-viscosity oil is deemed necessary, caution and judgement shall be exercised. The resultant effects of oil mixing and the addition of inhibitors upon thermal properties shall be considered.

Although it has been customary to recondition or reclaim circuit-breaker oil in much the same manner as oil from transformers, the problem is somewhat different. Whereas oxidation and sludging are usually the principal problem in transformer oil, such is not the case with circuit-breaker oil because circuit breakers normally operate at, or near, ambient temperatures instead of at elevated temperatures. In a circuit breaker the chief function of the insulating oil is to quench the arc. In so doing,thermal cracking occurs and minute particles of carbon form. These particles, coupled with moisture, can lower the dielectric breakdown voltage of the oil.

Copyright © 1985 IEEE All Rights Reserved

Copyright The Institute of Electrical and Electronics Engineers, Inc.
Provided by IHS under license with IEEE
No reproduction or networking permitted without license from IHS
Not for Resale

6. Types of Reconditioning and Reclamation Processes

Reclamation involves the use of methods and processes which result in a beneficial change in the oil composition. Table 6 shows the various oil-purification practices and lists the types of contaminants removed by the various processes. A description of the method and material used is as follows:

Table 6— Oil-Purification Practices

	Types of Contamination Removed						
					Acids, Sludge, etc		
Oil-Purification Practices	Solid	Free Water	Soluble Water	Air and Gas	Volatile	Other	Page No
(1) Vacuum dehydrator	No	Yes	Yes	Yes	Most	No	12
(2) Mechanical filter (blotter or filter press)	Yes	Partial	Partial	No	No	No	12
(3) Centrifuge	Yes	Yes	No	No	No	No	14
(4) Coalescing filter	Yes	Yes	No	No	No	No	14
(5) Precipitation settling	Yes	Yes	No	No	No	No	14
(6) Contact process	Yes	Yes	Yes	No	Yes	Yes	18
(7) Percolation by gravity	Yes	Yes	Partial	No	Yes	Yes	19
(8) Percolation by pressure	Yes	Yes	Partial	No	Yes	Yes	20
(9) Thermo-siphon bypass	No	No	Partial	No	Partial	Partial	23
(10) Activated carbon sodium silicate process	Yes	No	No	No	Yes	Yes	23
(11) Trisodium phosphate process	Yes	No	No	No	Yes	Yes	25

6.1 Gases and Water—Vacuum Dehydration

The vacuum dehydrator is an efficient means of reducing the gas and water content of an insulating oil to a very low value. There are several types of vacuum dehydrators in general use today. The guiding principle of each is the same; that is, the oil is exposed to a high vacuum and heat for a short interval of time. In one method the exposure of the oil is accomplished by spraying the oil through a nozzle into a vacuum chamber. In another type of vacuum dehydrator the oil is allowed to flow over a series of baffles inside a vacuum chamber thus forming thin films so that a large surface is exposed to the vacuum. If the oil contains solid matter, it is advisable to pass it through some kind of filter before processing it in the vacuum dehydrator, since solid contaminants may plug the nozzle of one type of dehydrator or pass through either type without being removed from the oil.

The operation of vacuum dehydrators is continuous. In addition to removing water, vacuum dehydrators will degas the oil and remove the more volatile acids. The other acids, however, will be relatively unaffected so the overall acidity of an oil will not be much improved by the vacuum dehydration method. In either type of dehydrator some means of automatically recirculating a very wet oil should be provided as a safety device to prevent an excessive water content in the outgoing oil.

--`,,`-`-`,,`,,`,`,,`---
Copyright © 1985 IEEE All Rights Reserved
Copyright The Institute of Electrical and Electronics Engineers, Inc.
Provided by IHS under license with IEEE
No reproduction or networking permitted without license from IHS
Not for Resale

6.2 Water and Solids

6.2.1 Blotter or Filter Press

The blotter press and similar filter-press devices are based upon the principle of forcing oil under pressure through a series of porous materials, usually paper. Filters of this type are capable of removing carbon, water, and sludge when they are in suspension, but cannot remove them effectively when carbon or sludge is in colloidal form. These devices will not remove air and they tend to aerate the oil.

The water-removing ability of the filter is dependent upon the dryness of the filter medium, and, consequently, suitable ovens should be provided to dry it before use. When filtering oil containing water, the filter medium rapidly comes into equilibrium with the water content of the oil and from that time on the filtered oil may contain water up to equilibrium at the temperature and relative humidity at which the filtering is done. Since the amount of dissolved water at saturation increases markedly with increasing temperature, filtering at low temperature is more effective in removing water. There is no satisfactory method of directly determining when the filter medium is too wet for further use, other than measuring the water content of the outgoing oil. Chief reliance has been placed upon inspection of the medium, an increase in input pressure, or a lowering in the dielectric strength of the filtered oil. Means are available that permit a continuous indication of the water content of the outgoing oil.

When the oil being processed contains much contamination, it is necessary to change the filter medium at frequent intervals. In some cases, the use of precoat (oil—fuller's-earth slurry) applied to the filter medium increases both the efficiency of operation and the length of time that the filter medium may be used.

6.2.2 Centrifuge

Centrifuges are a mechanical means for separating free and suspended contaminants such as carbon, water, sludge, and oil. In general, the centrifuge can handle a much greater concentration of contamination than most other means. It is not usually used for bulk cleaning of contaminated oil. The centrifuge cannot remove dissolved water or finely divided carbon, thus the oil leaving the centrifuge may be saturated with water at the temperature and relative humidity of operation. The centrifuge is not designed to treat the oil chemically.

In oil-reclamation processes, the centrifuge or filter separator can be used in conjunction with other reclamation equipment.

6.2.3 Coalescing Filter

A coalescing filter functions somewhat similarly to a centrifuge but with no moving parts. They are made of fiberglass and are contained in circular tanks. The fiberglass traps small water droplets and increases differential pressure across the filter medium thus forcing the droplets of water together and extruding water in the form of large water drops at the outer surface of the fiberglass element. The water drops are retained within a water-repellent separator screen and collect by gravity at the bottom of the filter while dry oil passes through the separator screen. They are suitable for unattended and automatic operation. They are usually used as a prefilter for vacuum treatment or clay treatment of oils to remove free water.

6.2.4 Precipitation or Settling

Precipitation is a very useful and the least expensive way to rid oil of some free water, sludge, and solid contamination heavier than the oil. Even very dirty oil can be reclaimed to a degree after a period of rest. Water is drained periodically from the bottom, while oil is decanted from the top layer.

Copyright © 1985 IEEE All Rights Reserved

Copyright The Institute of Electrical and Electronics Engineers, Inc.
Provided by IHS under license with IEEE
No reproduction or networking permitted without license from IHS Not for Resale

6.3 Adsorption of Soluble Contaminants

Adsorption is a process in which one substance attracts and holds the other substance tenaciously to its surface area. Most of the contaminants in oil, including water, are polar in nature and are therefore easily adsorbed.

Several types of materials are readily available as adsorbents, such as fuller's earth, attapulgite, activated alumina, and molecular sieves.

6.3.1 Materials

6.3.1.1 Fuller's Earth

The term *fuller's earth* as used today refers to a class of naturally occurring adsorbent clays, rather than to a specific mineralogical specie. The main constituent in this class is attapulgite clay, mined principally in South Georgia and North Florida. Specifically, attapulgite clay has been found most satisfactory for purifying transformer oils because it has the ability to neutralize acids, adsorb polar compounds, and decolorize to a clear oil.

What makes attapulgite unique is its crystalline structure. As mined, the clay is a hydrated magnesium aluminum silicate. During processing, the clay is crushed, heat activated, ground, screened, and bagged. The temperature of the heat activation or drying stage determines the degree of internal porosity. This porosity contributes to the clay's high surface area and hence adsorption capacity. High temperature activation produces a low volatile matter (LVM) clay. This is the most active material that strongly adsorbs water, has high acid adsorption, but less than optimum decolorizing efficiency. Lower temperature activation produces a regular volatile-matter (RVM) clay characterized by lower water adsorbing capacity but greater decolorization efficiency than LVM while acid neutralization is about the same.

It has been found that extruding an attapulgite clay will further enhance its adsorbing powers over a nonextruded clay. An extruded clay is designated AA. For transformer-oil reclamation, only two available designations are generally applicable—AARVM for maximum decoloring in a moisture-free system, or AALVM for good acid removal from an oil containing high moisture.

Choice of clay particle size or mesh size is a function of the type of reclamation equipment in use. *Percolation* towers use granular clays while *contact* systems use powdered clays. Usually a 30/60 mesh AALVM clay is employed for bulk treating transformer oil in clay towers equipped with a prefilter to remove water. However, depending on production flow rates, oil viscosity, and allowable contact time, a smaller mesh size (50/80) is also used because of its higher external surface area. Thus 50/80 RVM and 50/80 LVM are available for bulk oil purifiers.

In contact treating of oil, 100/UP RVM or 100/UP LVM are alternate choices, again depending on flow rates, viscosity of oil, etc.

Activated attapulgite clay can neutralize sizeable quantities of acid as shown in Fig 1. The amount of acid removed, correlated as the neutralization number, depends on many factors since adsorption is a dynamic equilibrium process. Temperature, flow rates, viscosity of oil, residence time, and initial level of acid all affect the rate and capacity of adsorption. Hence, Fig 1 should be used as a guideline for typical expected values only.

Copyright © 1985 IEEE All Rights Reserved

--``,,-`-`,,`,,`,`,,`---

Copyright The Institute of Electrical and Electronics Engineers, Inc.
Provided by IHS under license with IEEE
No reproduction or networking permitted without license from IHS Not for Resale

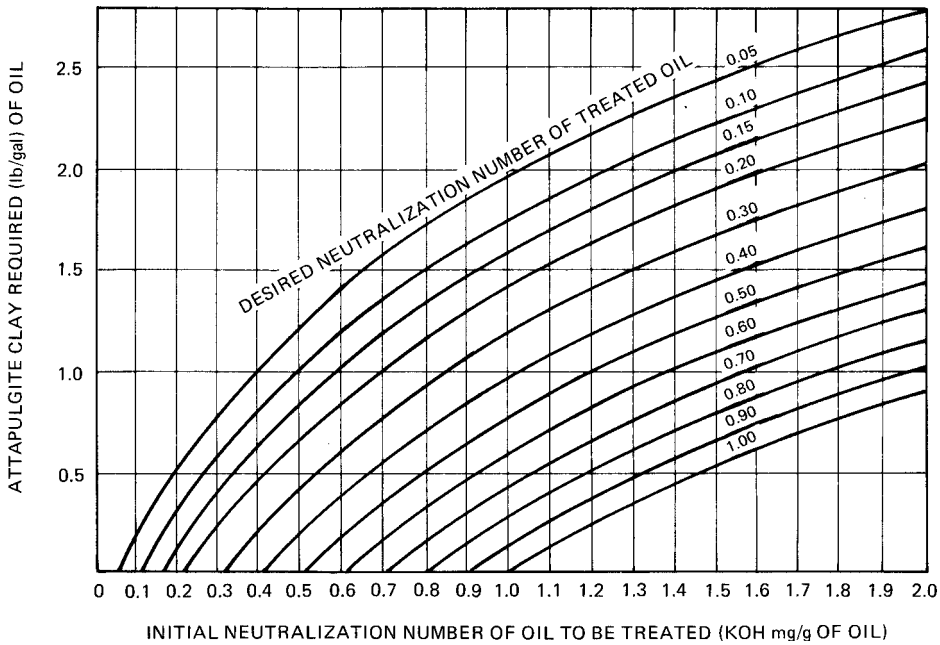

EXAMPLE: Assume that a spent oil has a neutralization number of (1.0 mg/KOH)/g of oil. To reduce the neutralization number to 0.5, approximately $^{3}/_{4}$ lb of attapulgite clay will be required for each gallon of oil treated.

Figure 1— Adsorption by Attapulgite Clay[6]

6.3.1.2 Alumina or Bauxite

Activated bauxite consists principally of hydrated aluminum oxide and is activated by thermal treatment alone. It is then a hard, durable, thermal-resistant adsorbent and can be regenerated and reused longer than clays.

The activated bauxite is available in bulk in various mesh sizes and is used for percolation filtering of oils.

6.3.1.3 Molecular Sieves

Molecular sieves are a group of unique crystalline adsorbents capable of separating substances based on their molecular size. These adsorbents are uniformly porous and have a strong affinity for water. Molecular sieves belong to a class of materials known as zeolites. The zeolites are aluminosilicates with the unusual characteristic of being able to undergo dehydration with essentially no change in crystal structure. The type 4A is used with transformer oil and has an unusual affinity for polar compounds, particularly water.

The molecular sieve 4A is available in bulk quantities and can be regenerated. It is significantly more expensive than the other adsorbent materials.

6.3.2 Contact Process

The contact process for reclaiming oil makes use of 200-mesh (77 mesh/cm) clay and relatively high operating temperatures. This process makes the most efficient use of the clay and produces a uniform product. The degree of reclaiming depends on the amount of clay used and the condition of the oil.

[6]Reprinted with permission of Engelhard Minerals & Chemical Corporation, Menlo Park, Edison, New Jersey 08817.

Copyright © 1985 IEEE All Rights Reserved

Copyright The Institute of Electrical and Electronics Engineers, Inc.
Provided by IHS under license with IEEE
No reproduction or networking permitted without license from IHS
Not for Resale

In a typical commercial apparatus, oil, to be reclaimed, is introduced into a heated mixing chamber as a measured amount of clay is fed in through a hopper. The mixture is stirred as heat is applied, and the process continues until the desired temperature is reached. The time involved in this operation is approximately half an hour. The oil is then dropped into a tank before it is pumped through a filter especially built to accommodate the clay. Much of the oil ordinarily retained in the earth is extracted by the application of compressed air to the filter.

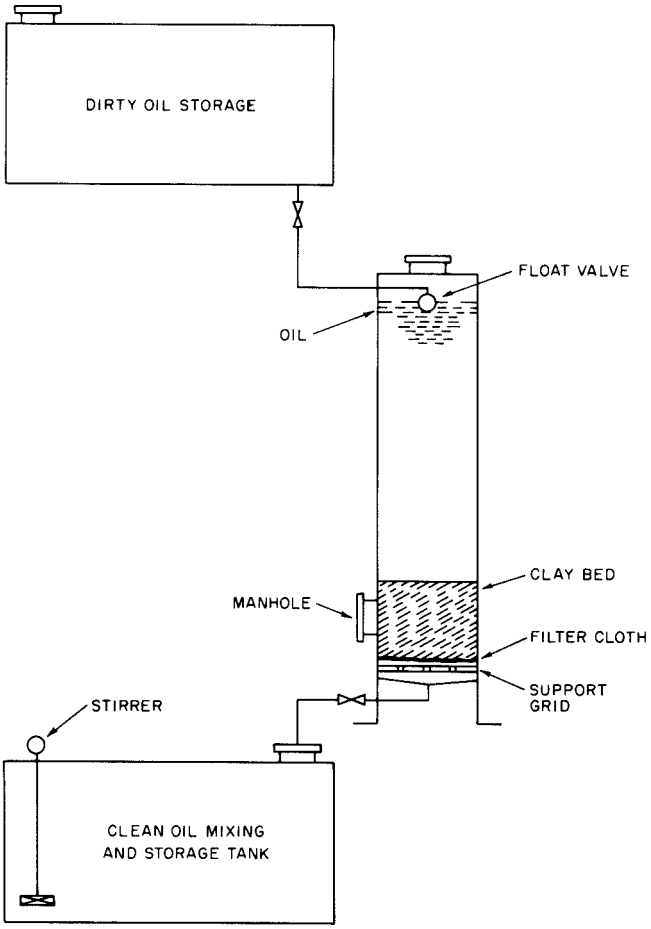

Figure 2— Schematic Diagram of Gravity-Percolation Refining Apparatus

This type of apparatus should not be used to process oil containing di-butyl para-cresol (DBPC), as this material, when catalyzed by clay, will begin to decompose at 100 °C.

6.3.3 Percolation by Gravity

Gravity percolation makes use of gravity—as the hydrostatic head of a column of oil—to force the oil through column of adsorbent, such as clay. A typical gravity system, shown schematically in Fig 2 consists of three tanks on different levels. The upper tank is used as a dirty-oil reservoir, the middle tank as the filter containing the clay, and the lower tank as a blending tank for the filtered oil. The middle tank is equipped with a strainer-type bottom covered by a filter cloth supporting a 6 ft (2 m) bed of clay. A float valve controls the flow of oil from the dirty-oil storage tank so that a constant head of approximately 15 ft (5 m) to the filter plate is provided. Once the process is started it continues in operation with very little attention other than periodic sampling.

Copyright © 1985 IEEE All Rights Reserved

Copyright The Institute of Electrical and Electronics Engineers, Inc.
Provided by IHS under license with IEEE
No reproduction or networking permitted without license from IHS
Not for Resale

The output of gravity percolation is a graded one starting with over-treated oil and ending with oil in approximately the same condition as before treatment. To obtain a uniform product, blending is necessary. By this method, the oil can be treated to any desired degree. The rate of flow is slow, being about (10 gal/h)/ft^2 (400 L/h)/m^2 of filter bed area for an installation such as the one described above. The slow flow rate results in long contact time with the filter medium which permits efficient use of the adsorbent.

6.3.4 Percolation by Pressure

Pressure percolation is similar to gravity percolation in general principle except that the oil is forced through the adsorbent by a pump. Pressure percolators are commercially available and all have a chamber to hold a container such as a bag or cartridge filled with the adsorbent. The chamber is designed so that oil is admitted around the outside of the adsorbent pack and should pass through the adsorbent before leaving the chamber.

These machines are capable of processing large volumes of oil in a relatively short time. Since the amount of adsorbent is relatively small, with respect to the amount of oil, frequent changes of the adsorbent are required.

An advantage of such machines is that they may be brought to the job and used directly on apparatus whose oil is to be reclaimed.

6.4 Types of Pressure Percolation

In these examples clay is indicated as the adsorbent. Other materials may be used.

6.4.1 Bulk Filters

Large pressure tanks have a fine mesh screen across the bottom and are filled with granular clay through an open-top cover. In operation, the hot oil flows through layers of clay slowly by gravity or by pressure from an inlet oil pump. The process thus may make use of gravity or pressure percolation. See Fig 3.

The clay may be placed in large baskets for easy removal with a lifting device, or shoveled out through a side opening, or, in some instances, the entire pressure tank can be tilted for dumping the spent cake.

The cost of operation of bulk filters is lower than that of cartridge types.

Copyright © 1985 IEEE All Rights Reserved

Copyright The Institute of Electrical and Electronics Engineers, Inc.
Provided by IHS under license with IEEE
No reproduction or networking permitted without license from IHS
Not for Resale

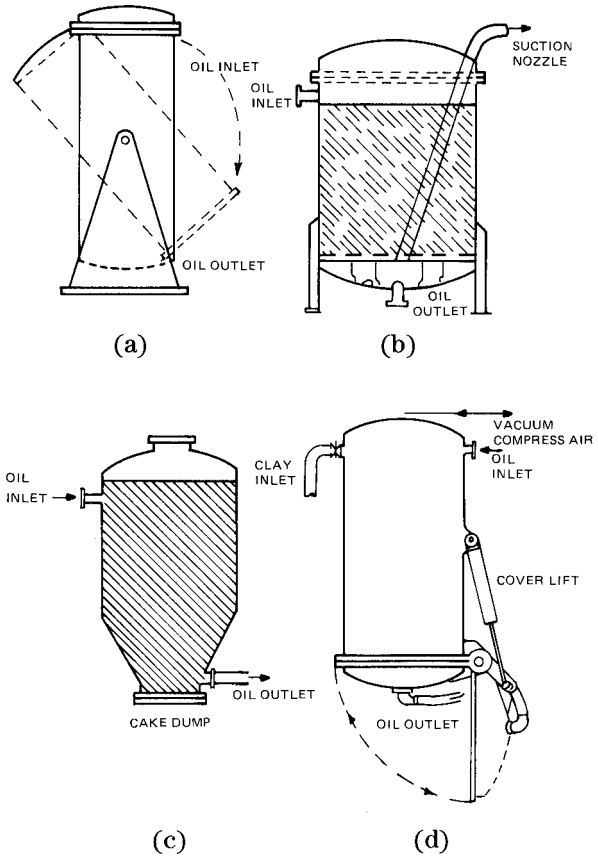

Figure 3— Bulk Clay Filters

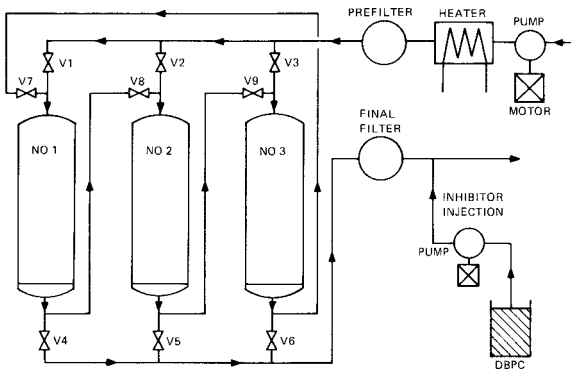

Figure 4— Three-Clay Tower System

6.4.2 Deep Bed Filtration

Today's trend is towards slender columns packed with loose clay by means of vacuum or conveyors with spent cake discharged through a bottom opening cover.

This design ensures long contact time of oil flowing from top to bottom, minimizes channeling, and provides the greatest improvement of oil conditions in a single pass. Two or three such columns or *towers*, piped in series, provide

Copyright © 1985 IEEE All Rights Reserved

Copyright The Institute of Electrical and Electronics Engineers, Inc.
Provided by IHS under license with IEEE
No reproduction or networking permitted without license from IHS
Not for Resale

for a better utilization of clay (Fig 4). Only the first tower in series is replaced with new clay and switched into the final tower position. In this manner, an almost continuous run with a consistent quality of effluent can be obtained.

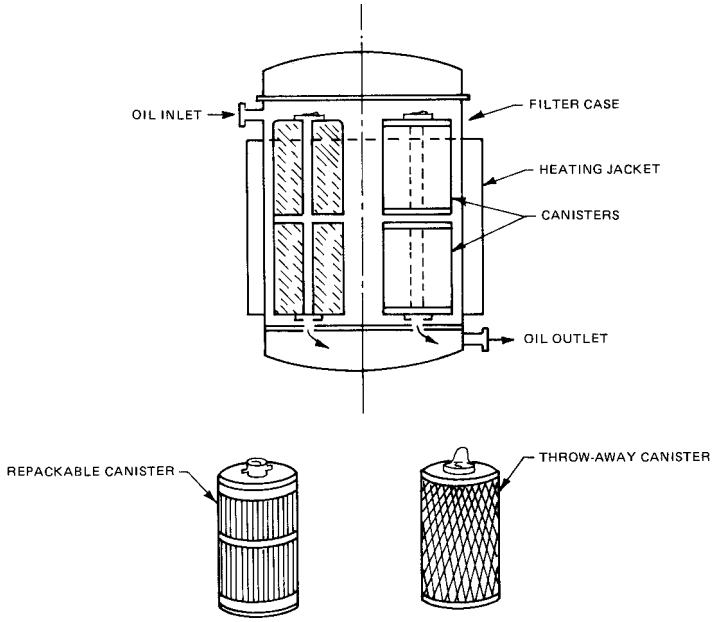

Figure 5— Fuller's-Earth Cartridge Filters

Each tower contains from 500 lb to 3000 lb of clay. Even in mobile operation, the tanks contain 200 lb—1000 lb each.

6.4.3 Throw-Away and Repackable Cartridges

Granular types of clay are packaged in throw-away canisters, holding 10 lb—30 lb of material, which are placed inside pressure-filter tanks. Protective antimigration filter cloth wrap is either inside the element or wrapped around the center tube. See Fig 5.

Throw-away cartridges and canisters are relatively expensive and can be justified only in emergencies or when a marginal condition of the oil requires removal of a trace contaminant. The limited amount of clay cannot be effective on very contaminated oil.

Repackable cartridges or canisters are less costly and are usually of a larger size, holding as much as 50 lb or more of clay each. After use, the canisters are removed and the clay replaced with new, dry material. In most cases this is more economical than the throw-away cartridges.

6.4.4 Percolation by Thermo-Siphon Bypass

Good oil that is deteriorating slowly may be held in safe operating condition by applying a special bypass earth filter to the individual transformer either on new equipment or added later. The oil is forced through the filter by the action of the heat generated by the apparatus and the heat dissipated by the filter.

The bypass method of maintaining oil in usable condition has certain definite limitations. On standby transformers or on circuit breakers it is inoperative since the heat necessary to its operation is not constantly available. The operation of bypass filters might also be termed very *gentle* since little force is available to drive the oil through even a coarse filter bed. There is also the possibility that fine particles of the earth may leak through the system into the processed oil. The adsorbents shall be changed regularly.

Copyright © 1985 IEEE All Rights Reserved

Copyright The Institute of Electrical and Electronics Engineers, Inc.
Provided by IHS under license with IEEE
No reproduction or networking permitted without license from IHS
Not for Resale

6.5 Activated Carbon Sodium Silicate Process

This method is capable of variation to meet the requirement of different grades of service-aged oil. Under favorable conditions, this process is a continuous one. The method consists of the following basic treatments:

1) An activated-carbon treatment in which 2% by weight of activated carbon is used.
2) A treatment involving 30% by volume of a 2% sodium silicate solution.
3) A clay treatment in which 2% by weight of activated fuller's earth is used.

The oil is heated to 85 °C and is maintained at this temperature until the final filtering operation is reached. The first step consists of a treatment by agitation with activated carbon in cases where the acid rating of the oil is 0.5 mg of potassium hydroxide per gram or over. This step is necessary to prevent subsequent emulsification of acid oil with the sodium silicate solution. Where the acid value is low, this process may be omitted.

The oil is next decanted through a filter to a second tank where it is paddle-stirred with the sodium silicate solution. It is then run through a centrifuge and the silicate solution is discarded.

The oil is now run into a reaction tank with clay added through a hopper. The resulting mixture is agitated, allowed to settle, and then cleaned by passing through a second centrifuge. The oil is then run into a receiving tank and allowed to cool. Finally, it is filtered and run into storage tanks.

When used without activated carbon, the process is continuous with an output of 150 gal/h (570 L/h). When the activated-carbon treatment is necessary, the process becomes a batch process with an output of 500 gal/d (1900 L/d). As both clay and carbon retain about 60% of their weight of oil, the process should be run with a minimum of these materials. Oil in fair condition shows satisfactory characteristics when treated with one percent carbon and clay.

6.6 Reclamation by Trisodium Phosphate

The trisodium phosphate method (Fig 6) consists in agitating a mixture of oil and trisodium phosphate solution maintained at 80°C for 1 h and then allowing the mixture to separate. Most of the spent phosphate solution is drained from the tank, while the balance is washed from the oil with a water spray. The oil is then decanted through a centrifuge and a heater into another tank where 200 mesh (77 mesh/cm) clay is added and the mixture agitated. This agitation with clay is maintained for 15 min and the clay allowed to settle overnight. The oil is again washed with hot water, decanted through a centrifuge, and then further dehydrated by passage through a centrifuge and then dehydrated by passage through a vacuum dehydrator or filter. See Fig 6.

The process is economical and capable of yielding a uniform product by varying the amounts of reclaiming agents as determined by the analysis of the deteriorated oil. The method may be more economical than reclaiming—using only clay for large quantities of badly deteriorated oil.

6.7 Modern, Oil-Reclamation Systems

6.7.1 Normal Systems

A flow diagram (Fig 7) shows a modern, multipurpose system. In most cases the equipment is installed on a trailer unit so that it can be moved to the transformer site for reclamation, or to new transformer locations for installation. Also, oil reclamation and upgrading systems may be used as stationary systems.

6.7.2 On-Site Energized Systems

The practice of reclamation of transformer oil with the equipment energized requires utilizing proper equipment and well-trained personnel or experts in the field. Although this is a practice that is successfully being used, some

--`,,`-`-`,,`,,`,`,,`---
Copyright © 1985 IEEE All Rights Reserved

Copyright The Institute of Electrical and Electronics Engineers, Inc.
Provided by IHS under license with IEEE
No reproduction or networking permitted without license from IHS Not for Resale

equipment manufacturers and operators recommend against reclamation of oil in energized equipment due to the difficulty in controlling risks. There are system conditions which can impact the reliability and safety of energized reclamation, including potential problems resulting from lightning or switching surges occurring during reclamation.

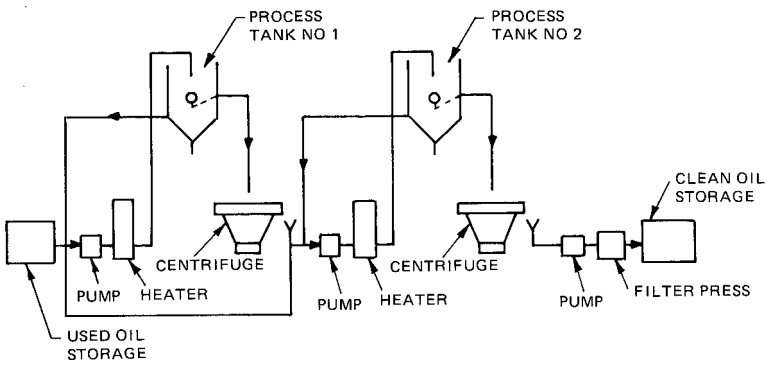

Figure 6— Schematic Diagram of Trisodium Phosphate Fuller's-Earth Refining Apparatus

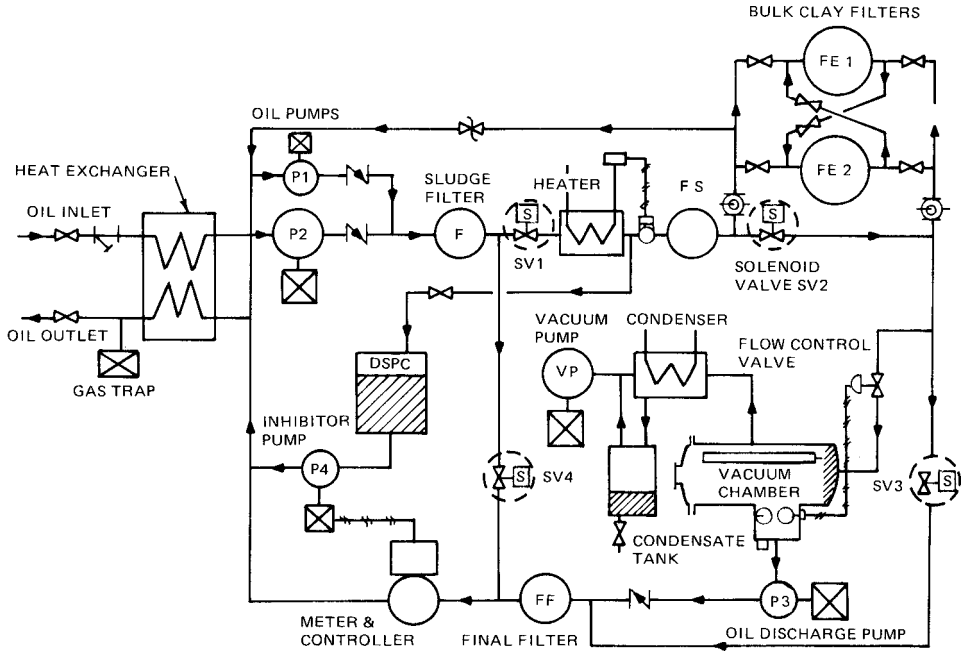

Figure 7— Typical Flow Diagram for Modern, Oil-Reclamation System

A typical modern reclamation system for such application includes as a minimum, a combination of an oil and electric heater, or both, deep-bed adsorbent towers, vacuum dehydration, and final filter with a nominal pore size of one-half micron.

Proper safety precautions are required to protect operating personnel. This includes specially designed commercial equipment to safeguard against certain possible hazards. There is a risk of damage or failure of the apparatus to be serviced. One risk centers around the possible bubble formation in the system. A properly designed system uses double protection against this possibility through proper use of a gas trap and vacuum degassification.

Copyright © 1985 IEEE All Rights Reserved

Copyright The Institute of Electrical and Electronics Engineers, Inc.
Provided by IHS under license with IEEE
No reproduction or networking permitted without license from IHS
Not for Resale

A second possibility concerns stirred-up contamination in the transformer due to movement of particulate matter and chemical contaminants which will reduce the dielectric strength. This concern is minimized in a properly designed system.

As a precaution, a proper evaluation of various transformer applications reveals that *not* every unit should be a candidate for energized reclamation.

Specific criteria dictate whether a given transformer should not undergo oil treatment while energized. The following criteria would recommend against reclamation of the oil in these transformers while they are energized:

1) When dissolved gas-in-oil analysis reveals certain combustible concentrations, repair and degassification would first be required.
2) Oil tests reveal *cloudy* oil or sediment containing iron oxide, bits of insulation or sludge. Insulation tests should determine the effect of these items on the integrity of the insulation system.
3) When free water or high-moisture content has been found in the unit, insulation tests would come first.
4) Transformer (>35 years old) when coupled with general poor condition of the unit.
5) Transformers rated 345 kV and higher.
6) Transformers with forced-oil cooling introduce a greater risk when processed with the forced cooling system energized.

6.8 Locations

6.8.1 Centralized Reclamation Site for Pooled Oil

This method is used by utilities and large industries where large amounts of oil can be received after it is collected. It consists of a tower filled with an adsorbent material such as fuller's earth, storage tanks for the pooled oil and the reclaimed oil, and the necessary pumps and plumbing required to circulate the used oil through the system. This type of reclamation can be done by either gravity or pressure percolation. This equipment is usually custom built for the particular job.

6.8.2 Mobile Reclamation of Pooled Oil

The method is similar to 6.8.1 except that the treating unit is mobile and can be transferred from one source of pooled oil to another. This system normally employs a pressure percolation method. Equipment for this method is commercially available.

6.8.3 Reclamation of Oil in Transformers and Associated Devices Using Mobile Equipment

In this method, oil is withdrawn from the bottom of the unit, heated, and pumped through an adsorbent bed such as fuller's earth, filtered, degassed, and dehydrated before it is returned to the top of the unit.

The process is continuous and is concluded when the oil meets prescribed test values. The processing equipment is commercially available.

6.9 Choice of Methods

The choice of reclamation methods that will prove the most practical and economical for a given system depends upon the geographical characteristics of the power system, the existing facilities available for application to such work, and the facts concerning the various types of refining equipment and methods previously described.

For example, on a compact system with large quantities of deteriorated oil or on a system where oil reconditioning has been done in the past at a central location, the gravity-percolation method of reclaiming has many advantages in requiring a minimum amount of new equipment, attention, and labor. On a system where the oils requiring attention

 Copyright © 1985 IEEE All Rights Reserved

Copyright The Institute of Electrical and Electronics Engineers, Inc.
Provided by IHS under license with IEEE
No reproduction or networking permitted without license from IHS Not for Resale

are widely scattered in location, service outages are difficult to obtain, and spare equipment is at a premium, some type of portable pressure percolator may be indicated for reclaiming in the field by recirculating the oil in the equipment.

Irrespective of the type of clay treatment used, additional processes should also be incorporated with the treatment.

1) The oil should be put through some device for removing free water before it contacts the clay to prevent water from wetting the clay. Water will cause at least partial and possible complete blocking of the clay, thus making it necessary to discard that batch of clay.
2) The oil coming out of the clay treater should be put through a completely automatic dehydrator equipped with positive means and safeguards for preventing water from being present in the finished product. This is particularly important when recirculating the oil in a transformer.
3) The oil should be passed through a one-half micron particle final filter prior to returning to the transformer, to filter out any remaining clay, lint, fine-ground iron, or other contaminants passed through the process equipment, since these particle contaminants reduce the dielectric strength of the oil and therefore the dielectric integrity of the equipment.
4) Processing hot oil through fuller's earth above 70°C can reduce the oxidation stability of the oil. Increasing the temperature above this value will additionally reduce the concentration of any oxidation inhibitor. Therefore, it is desirable to add an oxidation inhibitor to reclaimed oil in concentrations up to 0.3% by weight.

7. Oil Tests and Their Significance

There are many established ASTM tests of practical significance which have been applied to insulating oil, such as dielectric breakdown voltages, power factor, and interfacial tension. See ANSI/ASTM D877–80 [6], ANSI/ASTM D1816–79 [16], ASTM D924–82 [25], and ANSI/ASTM D971–82 [8].

Additional tests to detect the presence of deleterious products of oxidation or contamination (especially traces of PCBs) in service-aged oils also seem appropriate. Some of these are not yet developed as standard test methods, but due to environmental regulations may have to be used.

Table 7— ASTM Test Procedures

Test	ASTM Method
(1) Color	D1500 [12]
(2) Visual Appearance	D1524 [13]
(3) Flash Point	D92 [2]
(4) Interfacial Tension	D971 [8], D2285 [19]
(5) Pour Point	D97 [3]
(6) Specific Gravity	D1298 [10]
(7) Viscosity	D445 [4], D2161 [18]
(8) Gas Content	D1827 [17], D2945 [22], D3612 [23]
(9) Oxidation Inhibitor Content	D1473 [11], D2668 [20]
(10) Water Content	D1533 [14]
(11) Neutralization Number	D974 [9], D1534 [15]
(12) Oxidation Stability	D2112 [27], D2440 [28]
(13) PCBs in Oil by Gas Chromatography	Pending
(14) Dielectric Breakdown Voltage	D877 [6], D1816 [16]
(15) Power Factory	D924 [25]
(16) Foaming Characteristics of (Lubricating) Oils	D892 [7]

Copyright © 1985 IEEE All Rights Reserved

--`,,`-`-`,,`,,`,`,,`---
Copyright The Institute of Electrical and Electronics Engineers, Inc.
Provided by IHS under license with IEEE
No reproduction or networking permitted without license from IHS
Not for Resale

In Table 7 the list of tests and their significance is recommended for classification purposes and to determine the suitability for use of reclaimed oils. Tests should be made using the latest revisions of accepted standards or tentative standards approved by ASTM. These tests and their significance are as follows:

1) *Color—D1500* [12]. A low color number is an essential requirement for inspection of assembled apparatus in the tank. An increase in the color number during service is an indication of deterioration of the mineral insulating oil.
2) *Visual Appearance—D1524* [13]. The color and condition of a service-aged oil may be estimated during a field inspection by this method, thus assisting in the decision whether or not the oil is suitable for continued service or shall be reprocessed in some manner. Unusual changes in color or contamination with particulate matter may be detected.
3) *Flash Point—D92* [2]. The flash point of oil is the temperature to which the material shall be heated to give off sufficient vapor to form a flammable mixture with air under the conditions of the test. A low flash point indicates the presence of hazardous, volatile combustible contaminants in the insulating oil. The safe operation of the apparatus requires an adequately high flash point.
4) *Interfacial Tension—D971*[8], *Field Test—D2285* [19]. The interfacial tension between an electrical insulating oil and water is a measure of the molecular attractive force between their unlike molecules at the interface. It is expressed in millinewtons per meter. This test provides a means of detecting soluble polar contaminants and products of deterioration. Soluble-contamination or oil-deterioration products generally decrease the interfacial tension value.
5) *Pour Point—D97* [3]. The temperature at which insulating oil will just flow under the prescribed conditions is known as the pour point. The viscosity characteristics of the oil can affect this value. Presently, the pour point has little significance as far as contamination or deterioration is concerned, but may be useful for type identification and for determining the type of equipment in which it can be used.
   If, in the future, oils containing pour depressant additives are used, a significant increase in pour point during use could indicate a deterioration of the additive itself.
6) *Specific Gravity—D1298* [10]. The specific gravity (relative density) of an insulating oil is the ratio of the weights of equal volumes of oil and water at 15°C or 60°F. The specific gravity of a mineral insulating oil influences the heat transfer rates and may be pertinent in determining suitability for use in specific applications. In certain cold climates, ice may form in de-energized transformers exposed to temperatures below 0°C, and the maximum specific gravity of the oil used in such equipment should be a set value that will ensure that ice will not float in the oil at any temperature the oil might attain. It can also be used as a quick check for gross contamination with other fluids, that is, silicones or PCBs.
7) *Viscosity—D445* [4], *and 02161*[18]. The viscosity of an oil is its resistance to uniformly continuous flow without turbulence, inertia, or other forces. Viscosity influences the heat transfer and, consequently, the temperature rise of apparatus. The higher the viscosity, the lower the heat transfer rate will be. At low temperature, the resulting higher viscosity influences the speed of moving parts, such as those in power circuit breakers, switchgear, load tap changer mechanisms, pumps, and regulators. Viscosity controls mineral insulating-oil processing conditions, such as dehydration, degassification and filtration, and oil-impregnation rates. High viscosity may adversely affect the starting up of apparatus in cold climates; for example, spare transformers and replacements.
   Viscosity is not usually affected by contamination or deterioration unless there has been extreme cracking or oxidation of the oil.
8) *Gas Content—D1827* [17], *D2945* [22], *and D3612* [23]. The gas content of an insulating oil may be defined as the volume of gas per 100 volumes of oil. In evaluating service-aged oil, this test normally has little significance in determining the quality or serviceability of the oil. It will have significance to the operator of apparatus where low gas content is required.
   a) *Method D1827* [17]. This method determines the total gas content (except for carbon dioxide) of electrical insulating liquids with viscosities less than 1000 SUs at 100°C (214 cSt at 100°C). Displacement with carbon dioxide is used to separate the dissolved gases. No determination of the composition of the gas is made.
   b) *Method D2945* [22]. This method determines the total dissolved gas content of low and medium viscosity, 100 SUs at 100°F or lower (20 cSt at 40°C), electrical insulating fluids using a vacuum degassing operation. No determination of the composition of the gas is made.

Copyright © 1985 IEEE All Rights Reserved

Copyright The Institute of Electrical and Electronics Engineers, Inc.
Provided by IHS under license with IEEE
No reproduction or networking permitted without license from IHS Not for Resale

c) *Method D3612* [23]. This method determines the total dissolved gas content and composition of dissolved gases in the electrical insulating oils having a viscosity of 100 SUs at 100°F (20 cSt at 40°C) or lower. The dissolved gases are separated from the oil by a vacuum degassing operation and are then analyzed by gas chromatography. This test is usually used for diagnostic tests on operating equipment.

9) *Oxidation Inhibitor Content—D1473* [11], *and D2668* [20]. Oxidation inhibitors are added to mineral insulating oil to retard the formation of oil sludge and acidity under oxidative conditions. They are used particularly in systems partially or freely exposed to air during service life. Inhibitor effectiveness is a function of base oil type, freedom from contamination, and concentration. Consequently, methods are provided to assay concentration of inhibitor in insulating oil. Certain unaged oils may contain naturally occurring substances which have not been added to the oil, yet will yield a positive test within the limits of detectability by Method D1473 [11]. Depending upon the sensitivity of the apparatus used for Method D2668 [20], similar false indications may also be obtained. Two inhibitors in use are: 2, 6-ditertiary-butyl para-cresol and 2, 6-ditertiary-butyl phenol. It is anticipated that other oxidation inhibitors will be accepted.

NOTE — Procedure D1473 [11] is presently considered satisfactory only on 2, 6-ditertiary-butyl para-cresol.

10) *Karl Fischer Method—D1533* [14]. A low water content of mineral insulating oil is necessary to achieve adequate electrical strength and low dielectric loss characteristics, to maximize the insulation system life and to minimize metal corrosion.

11) *Neutralization Number—D974* [9], *and Approximate Acidity Field Test—D1534* [15]. The neutralization number for service-aged oils is in general a measure of the acidic constituents of the oil and may be pertinent, if compared to the value of the new product, to detect contamination by substances with which the oil has been in contact, to reveal a tendency toward chemical change or deterioration, or to indicate chemical changes in additives. It may be used as a general guide for determining when an oil should be replaced or reclaimed, provided suitable rejection limits have been established and confirmation is received from other tests.

The tests for field use are not intended to replace standard laboratory tests, but rather are intended as screening tests to minimize the number of field samples submitted to the laboratory. They permit approximate evaluations of the amount of acid and polar constituents and hence of the degree of deterioration, or contamination, or both, of the oil. However, they are only semi-quantitative and any decision to replace or reclaim an oil should be confirmed by laboratory tests.

12) *Oxidation Stability—D2112* [27], *and D2440* [28]. The resistance to oxidation of mineral insulating oils may be indicated by

a) The percentage of insoluble matter formed in a prescribed length of time
b) The amount of acidity formed in a prescribed length of time
c) The length of time required for the oil to react with a given volume of oxygen, when a sample of oil is heated and oxidized under prescribed conditions

The development of oil sludge and acidity resulting from oxidation during storage, processing, and long service life should be held to a minimum. This minimizes electrical conduction and metal corrosion, maximizes insulation system life and electrical breakdown strength, and ensures satisfactory heat transfer.

These tests are generally applicable to new or reclaimed insulating oils, or both, and D2112 [27] is intended specifically for inhibited oils.

Numerical correlation between results from these laboratory tests and years of service or sludge accumulation in transformers has yet to be established.

13) *PCBs in Oil by Gas Chromatography—D4059-83* [30]. This method quantitatively measures the amount of PCBs present in oils. If PCBs are found to be present, the oil shall be handled or disposed of in the manner prescribed by law.

14) *Dielectric Breakdown Voltage—D877* [6], *and D1816* [16]. The dielectric breakdown voltage of an insulating liquid is of importance as a measure of its ability to withstand electric stress without failure. It is the voltage at which breakdown occurs between two electrodes under prescribed test conditions. It serves primarily to indicate the presence of contaminating agents such as water, dirt, or conducting particles in the liquid, one or more of which may be present when low dielectric breakdown is found by testing. However, a high dielectric breakdown voltage does not indicate the absence of all contaminations. Two methods are recognized for measuring the dielectric breakdown voltage of an oil (D877 [6] and D1816 [16]). Method D877 [6] is recommended for the routine acceptance of new, unprocessed oil from a vendor. It is also frequently used to assess the quality of service-aged oil.

Copyright © 1985 IEEE All Rights Reserved

Copyright The Institute of Electrical and Electronics Engineers, Inc.
Provided by IHS under license with IEEE
No reproduction or networking permitted without license from IHS
Not for Resale

Method D1816 [16] is a method for use on oil being processed into apparatus and is finding increased usage for oil contained in apparatus. This method should not be used for the acceptance testing of new, unprocessed oil as received from a vendor.

15) *Power Factor—D924* [25]. Power factor (dissipation factor) is a measure of the dielectric losses in an oil. A high value is an indication of the presence of contaminants or deterioration products such as oxidation products, metal soaps, and charged colloids.

16) *Foaming Characteristics of (Lubricating) Oils—D892* [7]. Very small traces of silicone oils of the types used as insulating oils dissolved in mineral oil can lead to foaming of the oil during vacuum dehydration and filling of equipment. This test, while not designed for insulating oils, may give some measure of the propensity of the oil to foam.

Copyright © 1985 IEEE All Rights Reserved

Copyright The Institute of Electrical and Electronics Engineers, Inc.
Provided by IHS under license with IEEE
No reproduction or networking permitted without license from IHS Not for Resale

Annex A Bibliography

(Informative)

(This Appendix is not a part of IEEE Std 637-1985, IEEE Guide for the Reclamation of Insulating Off and Criteria for Its Use.)

The following information is a compilation of articles related to this guide and should not be construed to be recommendations of the guide.[7]

1930

STEELE, E. H. *The Reclaiming of Transil Oil*. New England Division: *NELA* Meeting of the Electrical Apparatus Committee, Minutes of April 17, 1930.

NOTE — The article is not available. See 1952, (2).

1936

BASKETTE, L. Insulating Oil Reconditioned At Low Cost. New York: *Electrical World*, March 14, 1936, pp 48–49.

NOTES:

The Southern California Edison Co

Uses Sharple's oil reclaimer; centralized system; alkaline wash then clay treatment; classifies service oils as

1)New oil
2)No 1 oil; acidity < 0.5; low carbon residue; withstand 3 day oxidation test
3)No 2 oil; acidity from 0.5 to 1.0; considerably sludged and oxidized; poor steam emulsion; low dielectric strength
4)No 3 oil; used circuit-breaker oil

Recommended Treatment: Activated carbon (2% by weight), sodium silicate wash (30% by vol), clay treat (2% by weight). Rate: 150 gal/h. Cost: (materials, power, labor) <6¢/gal. Uses reclaimed breaker oil in transformers.

1939

1) HOUSELY, J. E. Reconditioning of Insulating Oils by Activated Alumina. *AIEE Transactions*, vol 58, 1939, p 172.
   NOTES:
   The Aluminum Company of America
   Describes three types:
   a)Thermosiphon bypass attached to transformer
   b)Gravity percolation column
   c)Canvas bag suspended in oil
   Uses Grade A activated alumina 4–8 mesh coarse type to get oil flow.
   Removes water, reduces acidity.
   Uses acidity as criteria; desires acidity < 0.1; loses approximately 2% oil in activated alumina.
   Prefers bypass arm for large energized transformers, canvas bag for small transformers and large bushings.
   Spent activated alumina reactivated; first blow with hot air at 400°F then burn off organic at approximately 600°F.
   Advantages: No dusting; can reactivate.
2) CALL, R. G. Reclamation of Transformer Oil. New York: *EEI Bulletin*, vol 7, Oct 1939, pp 483—484.

[7]The NOTES in this Appendix in many instances are in abbreviated form. They are taken from the minutes of specific meetings.

Copyright © 1985 IEEE All Rights Reserved

Copyright The Institute of Electrical and Electronics Engineers, Inc.
Provided by IHS under license with IEEE
No reproduction or networking permitted without license from IHS Not for Resale

NOTES:

The Beech Bottom Power Co and the West Penn Power Co

Warns that residual oxidized oil and sludge in transformer catalyzes decomposition of replacement new or reclaimed oil; must clean transformer first.

Service oil needing replacement or reclaiming; acidity > 0.7; color 7; power factor 1% at 20°C; visible sludge.

Describes both percolation and contact processes using clay (30/60 mesh) from Florida or Georgia.

New oil cost (1939); 20–35¢/gal; reclaiming costs approximately 8¢/gal.

Best reclamation treatment for best oxidation life is H_2SO_4 contact (2% by vol); centrifuge; then contact with 200 mesh clay.

Warns against overtreating to white oil stage.

1940

1) CUNNINGHAM, P. D. and PENNINGTON, J.F. Reclamation of Apparatus Oil Proves Profitable. *Electrical World*, July 27, 1940, pp 46–47.

NOTES:

Georgia Power Co

Centralized system; 900 gal/24 h

Process: Heat oil to 175°F; add alkaline solution (90 lb trisodium phosphate in 60 gal water)
Mix 1 h at 175°F
Settle $^1/_2$ h
Draw off phosphate solution
Centrifuge oil
Heat to 200°F
Add 300 lb Retrol (Filtrol Co of California clay)
Air mix for 30 min
Settle overnight
Water mist spray (75 gal) over surface
Centrifuge and filter press
Criteria for oil needing reclamation; acid > 0.7; color > 6; power factor > 3% at 20°C.
Reclaimed oil; acid < 0.08; color < 6; power factor < 0.5% at 20°C.
Reclamation cost: 10.4 ¢/gal; new oil cost (1940) 30 ¢/gal.

2) *Progress Report on Methods of Reclamation of Transformer Oils*. Edison Electric Institute, Power Station Chemistry Subcommittee, Prime Movers Committee.

NOTE — The article is not available.

1941

1) WALSH, E. F. *Recondition Insulating Oil Economically*. New York: *Electrical World*, vol 115, April 19, 1941, pp 51-54, 119.

NOTES:

The Narragansett Electric Co, Providence, RI

Claims can reclaim oil to be chemically and physically equivalent to new oil—five years experience.

Reclaims 1500 gal in two, 8 h work days.
Process: Heat oil to 150°F
Add alkaline mixture (trisodium phosphate)
Mix 1 h at 150°F
Settle
Draw off water-alkaline solution
Spray water on surface
Decant
Centrifuge
Heat to 170°F
Add clay
Mix for 15 min
Settle overnight
Spray water on surface and centrifuge
Cost: (labor, materials, fixed charges) 7 ¢/gal.
Criteria for reclamation: acid > 0.7; steam emulsion > 80; power factor > 1.0% at 20°C; water > 60 ppm.
Reclaimed oil: acid = trace; steam emulsion < 10, power factor < 0.02% at 20°C; water < 30 ppm.

Copyright © 1985 IEEE All Rights Reserved

Copyright The Institute of Electrical and Electronics Engineers, Inc.
Provided by IHS under license with IEEE
No reproduction or networking permitted without license from IHS Not for Resale

2) PETERSON, J. A. and WESTGATE, M. C. Criteria for Reclamation of Insulating Oil. New York: *Electrical World*, July 26, 1941, p 41.
NOTES:
Commonwealth and Southern Corp, Jackson, Michigan
Criteria to reclaim: dielectric strength < 17; acidity(transformers) < 0.9; acidity for circuit breakers < 1.5.
Estimates that sludging starts with acidity: 0.5 or higher; takes 1.6 yr for open breather transformer; 4.1 yr for expansion tank type; 67 yr for inert gas type to reach this acidity.
Reclamation is economical if you have > 10 000–30 000 gal/yr to reclaim with new oil costs at 20 ¢/gal.
Reclaiming methods cited are:
a)Chemical treatment and fuller's earth
b)Activated alumina
c)Activated carbon, sodium silicate, and fuller's earth
d)Portable method: fuller's earth; sodium hydroxide; vacuum; filter press; glass filter
The company notes that processing may lose up to 10% of volume of oil.

1942

WALSH, E. F. Reconditioning Insulating Oils. *Kuhlman Kurrents*, vol 18, no 3, 1942.

NOTE — The article is not available (probably same as 1941 Walsh publication).

1944

BARLOW, W. G. *Reclaiming of Transil Oil*. Doble Clients Conference Minutes, 1944, pp 10–201.

NOTES:

New Bedford Gas and Edison Light Co

Process used since 1928.
From 1928 to 1944 reclaimed 500 000 gal.
Classifies service oils into two types
1)Very dirty—mostly distribution transformer oils
2)Cleaner oil (large power transformers)
Batch treat; 400 gal per batch.
Process: Add 3–5 gal H_2SO_4
Air agitate for 30 min and let stand overnight
Transfer oil and add 5–6 gal sodium silicate solution
Air agitate for 30 min and settle overnight
Transfer to third tank and add 100–150 lb of fuller's earth (200 mesh)
Mix (air) and settle overnight: filter press
Process oil loss 6%.
Reclaimed oil properties: color 2; dielectric strength 28–30; acidity 0 to 0.05.
Cost: (material, oil loss, labor, maintenance, power, etc) 6¢/gal.

1946

1) *Doble Client Oil Committee Report*
NOTES:
F. M. Steel of the Hilliard Corp
They have two sizes of oil purifiers—50 gal/h and 200 gal/h
Process: Pump, heat exchanger, duplex filter, and vaporizer
Oil heated to 200°F, through duplex filter (vacuum of 26–28 inches), to vaporizer (heated to 250°F)
Duplex filter has 14 lb cartridges of fuller's earth in series—after drain each, cartridge holds $1\frac{1}{2}$ gal oil
Typical: Before process acid = 1.0; after acid < 0.5 and dielectric strength > 25
Nine companies reported reclaiming oil by
a)Chemical treatment
b)Activated alumina

Copyright © 1985 IEEE All Rights Reserved

Copyright The Institute of Electrical and Electronics Engineers, Inc.
Provided by IHS under license with IEEE
No reproduction or networking permitted without license from IHS Not for Resale

c)Fuller's earth
d)Honan-Crane equipment
Inhibitor *not* added to final oil generally.
Thirteen companies used reclaimed oil for circuit breakers and nine companies used it for general usage.

2) LIMPUS, L. M. *A Progress Report on the Control of Insulating Oil Deterioration and Its Reclamation*. Doble Client Conference Minutes, 1946, pp 10–101.
NOTES:
Oklahoma Gas and Electric Co
Uses Narragansett (Walsh) System—centralized system; trying activated alumina bypass filters—for portable treater using bauxite.
At Oklahoma Gas and Electric the average is 60 d/yr with > 90°F ambient.
Have 750 000 gal in open type apparatus; 500 000 gift in other types.
Mix oils to be reclaimed; oil reclaiming loss = 15%.
Oil to be treated if acid > 0.75.
Average reclaimed oil acid < 0.1; power factor < 0.1% at 20°C; IFT < 25.
Uses Retrol (fuller's earth).
Cost including fixed charges 6¢/gal.

3) DONAHUE, L. M. *Youngstown-Miller Method of Reclaiming Oil*. Doble Client Conference Minutes, 1946.
NOTES:
Central Vermont Public Service Corp
Centralized, contact batch process.
Process: Oil plus fuller's earth (or Retrol) heated to 350°F (vaporizes volatiles and aqueous)
Mix and filter 5 gal/h; use $^1/_2$ lb fuller's earth per gal
Cost: 8¢/gal—oil loss + 10%

4) BACON, R. C. *Review of Oil Reconditioning Methods*. Doble Client Conference Minutes, 1946.
NOTES:
Doble Engineering Co Report
Covers economic factors to evaluate (reclaiming versus selling as fuel).
Describes processes in use such as
a)Narragansett Electric Co Method: Trisodium phosphate; water wash; centrifuge
Cost: 7¢/gal
b)Southern California Edison Co process: activated carbon treat; sodium silicate; clay
Cost: approximately 6¢/gal
c)Activated alumina process—either percolation or as thermosiphon bypass
Claims disadvantages are that reclaimed oil has high-steam emulsion number and that first oil through is overtreated, and last oil through is undertreated.
d)Sulfuric acid method (New Bedford): Use H_2SO_4, then sodium silicate, then fuller's earth, then filter.
e) Buckeye process *Hydrovolifier*: Heat oil; atomize at elevated temperature then filter; removes volatiles and solids.
f) Honan-Crane Process: Force-feed percolation sure); fuller's earth; filter; portable; various sizes—100, 200, 300 gal/h.

5) GOSSLING P. W. L. and MICHIE A. C. The Contribution of the ERA to International Research on Transformer Oils. London, England: *Journal of the Institute of Petroleum*. July 1946.

6) WOOD-MALLOCK J. C. Some Developments in the Refining of Transformer Oils. London, England: *Journal of the Institute of Petroleum*. July 1946.

7) BARTON C. H. The Sludge Test for Transformer Oils. London, England: *Journal of the Institute of Petroleum*. July 1946.

8) POLLITT A. A. Oxidation Tests for Transformer Oil. London, England: *Journal of the Institute of Petroleum*. July 1946.

9) GOSSLING P. W. L. and ROMNEY J. Sludging Value of Transformer Oil—Influence of Condenser Water Temperature. London, England: *Journal of the Institute of Petroleum*. July 1946.

Copyright © 1985 IEEE All Rights Reserved

Copyright The Institute of Electrical and Electronics Engineers, Inc.
Provided by IHS under license with IEEE
No reproduction or networking permitted without license from IHS Not for Resale

1947

1) *Doble Client Oil Committee Report*
NOTES:
1946 client questionnaire—reclaiming costs justified if in range of 100 000 to 500 000 gal/yr depending upon type of utility system.
Reclaiming processes used—same as 1946.

2) POHMAN, F. J. *Serviceability Tests on Transformer Oil from the Viewpoint of the Maintenance Engineer*. ASTM Bulletin no 149, Dec 1947, pp 84–88, discussion pp 88–89.
NOTES:
Commonwealth Edison Co
No one test on oil adequate to determine continued use or need for replacement.
Stressed need for industry to establish limits for the various oil tests as a guide to classify as
a)Alright to continue use
b)Needs reconditioning
c)Needs to be reclaimed, etc

3) TYNAN, H. S. Transformer Oil Reconditioned for 7¢ A Gallon. New York: *Electrical World.*
NOTES:
City Public Service Board, San Antonio, Texas
600 gal/d; 7¢/gal; lose 6%–8% of oil
Process: 0.05 gal; H_2SO_4/gal oil
Spray in as oil is agitated by compressed air
1 h mix
Settle for 16 h and draw off sludge
Treat with clay (0.75 lb No 1 mill white clay per gal)
Mix and heat to 275°F
Agitate with live steam and cool to 145°F
Filter press then centrifuge
Typical before/after properties: start = 631 gal—end = 590 gal

	Before	After
Dielectric strength length	20	25+
Power factor	1.77 (20°C)	0.22 (20°C)
Acidity	0.8	0.02
Color	5	1.5

4) SHELLHORSE, A. W. *Reclamation of Insulating Oil.* Doble Client Conference Minutes, 1947, pp 10–401.
NOTES:
Georgia Power Co
Uses Narragansett trisodium phosphate process.
Reclaim approximately 100 000 gal/yr—centralized.
Criteria to reclaim: acid > 0.75—in addition reclaim all oil from units returned to service shop.
Uses reclaimed oil transformers, regulators.
Reclaimed oil color reduced two numbers: acid to <0.1; power factor (20 °C) < 0.15%; dielectric strength > 30.
Cost to reclaim: 7¢/gal.

5) BURRILL, G. S. *Purifying Transformer Oil in the Field.* Doble Client Conference minutes, 1947, pp 10–501.
NOTES:
Narragansett Electric Co
Some substation transformers were treated while energized using Honan-Crane (180 gal/h)—connected to fill and drain valves; took two days
Same procedure for a number of induction voltage regulators
Expect to retreat after approximately one year after refilling with reclaimed oil because sludge and old oil in coils deteriorates oil.

6) WALSH, E. F. *Reconditioning Insulating Oils in Transformers and Other Electrical Equipment Under Normal Load Conditions.* Doble Client Conference Minutes, 1947, pp 10—701.

Copyright © 1985 IEEE All Rights Reserved

Copyright The Institute of Electrical and Electronics Engineers, Inc.
Provided by IHS under license with IEEE
No reproduction or networking permitted without license from IHS Not for Resale

NOTES:

Narragansett Electric Co

Designed own apparatus for treating units while energized; uses fuller's earth; 70 to 100 gal/h; treater holds 150 lb of fuller's earth; warns that retreatment is needed after 9 months to 1 year in service.

Cost: (labor and materials but not fixed charges) 1.4¢ gal.

Oil in service free from sludge if IFT > 19.

7) HOWLAND, R. A. *Insulating Oil Maintenance Equipment.* Doble Client Conference Minutes, 1947, pp 10–901.

NOTES:

Brigg's Filtration Co

Mostly on thermosiphon bypass using bonded blocks of activated alumina.

The company is developing portable reclaimer based on three types of filters.

First heat oil then filter out solids; then blotter press to dry and then activate alumina blocks to reclaim.

1948

1) BOUGHTER, C. L. Reconditioning of Acid and Sludging Oils. *Electric Light and Power,* March 1948, pp 58–64.

NOTES:

New york State Gas and Electric

Worked with F. M. Steele of Hilliard Corp (HILCO) to developed portable reclaimer—long distances on system.

140 lb of fuller's earth is needed to reduce acid number by 0.1 for 100 gal.

Use 60/90 mesh or finer—after fuller's earth to vacuum vaporizer to dehydrate, degassify, and to remove volatile acids—200 °F at 75—100 mm vacuum; diagram of portable unit given; uses fuller's earth cartridges—each = 30 lb of earth—each filter has 8 cartridges; can use bauxite—more efficient for acid but poorer decolorization.

Portable unit called HILCO Hyflow oil reclaimer.

Average reclaiming cost: 13¢/gal; new oil cost: 28¢/gal.

Also treats transformer on line (energized).

2) MILES, H. V. Insulating Oil Purification Offers Operating Economies, New York: *Electrical World,* Oct 23, 1948, pp 92–94.

NOTES:

Honan-Crane Corp, Lebanon, Ind—A Subsidiary of Houdaille-Hershey Corp, Detroit, MI

Reviews various reclamation methods used in the past; describes their portable equipment; uses clay—for field treatment of oil in transformer—600 gal/h; has dual absorbent units plus vacuum degassifier and dehydrator.

Uses acidity and IFT as criteria.

3) BOUGHTER, C. L. *Reconditioning of Acid and Sludging Transformer Oils.* Doble Client Conference Minutes, 1948, pp 10–401.

NOTES:

New York State Gas and Electric

(The article is similar in part to 1948 (1).)

Uses two types of reclaimer (portable)

a)HILCO (Hilliard Corp, Elmira, NY)

b)Hoffman Oil Conditioner

Treats oil in field; pooled oil in de-energized units and in energized units.

Average cost: 13.2¢/gal

Tried Bauxite—prefers activated clay followed by vacuum.

4) MARCROFT, H. C. *Life Tests and Reclamation of Lubricating and Transformers Oils.* Doble Client Conference Minutes, 1948, pp 10—501.

NOTES:

Penn Water and Power Corp

Uses Commercial Reclaimer; fuller's earth; treats oil at 135°C.

5) MILES, H. C. *Aspects of Insulating Oil Conditioning.* Doble Client Conference Minutes, 1948, pp 10–601.

NOTES:

Honan-Crane Corp, Lebanon, Ind – Subsidiary of Houdaille-Hershey Corp, Detroit, MI

They cite *Electrical World* estimate of 12 million gallons in industry in 1948 needing replacement; claim that they can reclaim for one-third cost of new oil; cites residual sludge and acids in transformer decreasing life of either new or reclaimed oil; stresses preventative maintenance; stated some utilities monitor acidity, IFT, dielectric strength, and power factor; lists factors to consider in selecting reclaiming method; covers pros and cons of various filtering, reconditioning, and reclaiming processes; reclaiming costs run 1 $^{1}/_{2}$¢/gal (reclaim in transformer while energized) to a high of 15 $^{1}/_{2}$¢/gal; new oil costs placed at 44 $^{1}/_{2}$¢/gal.

Copyright © 1985 IEEE All Rights Reserved

Copyright The Institute of Electrical and Electronics Engineers, Inc.
Provided by IHS under license with IEEE
No reproduction or networking permitted without license from IHS Not for Resale

Honan-Crane purifier has 7 individual units of fuller's earth—basket type; total earth charge: 700 lb—flow rate = 25 to 1500 gal/h—can put outfit on truck.
Suggest in-service oils be evaluated using acidity, IFT, insoluble sludge, dielectric strength, and power factor; recommends reclaim when acidity approaches 1.0 and if IFT <20—average reclaim costs approximately 15¢/gal.

1949

1) *Doble Client Oil Committee Report*
NOTE — *1948 Questionnaire:* 18 reclaim oil; 14 do not; 13 reclaim at fixed locations; 11 have one or more portable units; one uses bypass filter, oil quality gauged by IFT and acidity; most reclaim oil to meet acidity < 0.1 and IFT > 30.
2) CALL, R. G. One System of Laboratory Testing to Appraise Serviceability of Oils in Transformers. *ASTM Special Technical Bulletin* no 95, Reclamation pp 26–27.
NOTES:
American Gas and Electric
Recommends a number of tests to evaluate oil in service to determine if
a)Continue in service
b)Recondition
c)Reclaim
d)Replace—uses viscosity, specific gravity, neut no, color, IFT, steam emulsion, power factor, dielectric strength, free water, sludge
Not economical to reclaim if acidity >1.0
Uses fuller's earth and reclaims to 50 IFT
3) Von FUCHS, G. H. Consulting Engineer. Performance of Inhibited Transformer Oils. *ASTM Special Technical Bulletin* no 95, Reclamation, p 47.
NOTES:
Believes that all oil should be inhibited—for either inhib or noninhib oil in service; oil will be sludging when IFT> 20.
Recommends ASTM D943 to evaluate oxidation life of oil; oil in service evaluated using IFT, acidity, and sludge tests.
4) WALSH, E. F. Care of Insulating Oils for Electrical Equipment. *Edison Electric Institute Bulletin*, Nov 1949, p 428.
NOTES:
Narragansett Electric Co
Author has developed nomograph relating IFT and power factor to an arbitrary scale called *quality factor*.
a)If quality factor > 34 and PF < 2% oil is alright to continue in service
b)If quality factor > 34 and PF > 2% oil should be filtered or centrifuged
c)If quality factor < 34 oil should be changed out or reclaimed
Uses fuller's earth for reclaiming.
Reclaims oil while transformer is energized;
EXAMPLE: 2460 gal unit oil had acidity = 0.58
PF at 20 °C = 3.7%
IFT = 16
Quality factor = 24
Dielectric strength = 33
After treat with fuller's earth (450 lb—3 charges) oil had
acidity = 0.32
PF at 20 ° C= 0.4%
IFT = 32
Quality factor = 64
Dielectric strength = 33.
Recommends to retreat oil in unit after 1 yr to remove residuals (acid, sludge, etc).
Recommends reclaim to IFT = 50 then add inhibitor; claims such are all superior to new, uninhibited oil.
5) MANCROFT, H. C. Reclaiming Oil Justifies Costs. New York: *Electrical World*, Feb 26, 1949.
NOTE — Commercial semiautomatic equipment using fuller's earth is the most economical method of reclamation of oil. Badly sludged oil may be given a trisodium phosphate treatment prior to the earth treatment.

Copyright © 1985 IEEE All Rights Reserved

Copyright The Institute of Electrical and Electronics Engineers, Inc.
Provided by IHS under license with IEEE
No reproduction or networking permitted without license from IHS Not for Resale

1950

1) LIMPUS, L. M. Thermosiphons Prove Economical for Cleaning Transformer Oil. New York: *Electrical World*, April 10, 1950, pp 104–106.
NOTES:
Oklahoma Gas and Electric Co
Cites study with three transformers with thermosiphon arms; used activated alumina; cost versus new oil—minimum size transformer economically feasible etc.

2) SEUBERT, R. F. and SARCHET, B. R. *Performance of the Inhibitor*. Koppers Co Bulletin, 1950.
NOTES:
Oil is in early stages of sludging when IFT = 15—for fuller's earth reclaiming of service oil with IFT = 17.5.

Clay Treat	IFT	Acidity
1.85 lb/gal	49.6	0.03
1.14 lb/gal	43.8	0.05
0.66 lb/gal	38.3	0.08
0.33 lb/gal	33.7	0.16
0.17 lb/gal	28.4	0.18
0.10 lb/gal	26.1	0.20

Reclaimed oil without inhib added = short life.
In general, the more clay per gal = lower acidity, higher IFT, and greater receptivity to DBPC.
Economic factors dictate degree of reclaiming.
Remove the sludge and other deterioration products from the transformer before filling with the new or reclaimed oil—if this is not done the life of the oil will be shortened.

3) DOBLE, F. C. *Reclamation of Oil*. Edison Electric Institute Minutes, T & D Committee, Oct 20, 1950.
NOTES:
Service oil of IFT = 19 or less = sludging—should fuller's earth treat—if reclaim to high IFT but no inhibitor added will get < $^1/_2$ oxidation life of new oil
Generalities
a)The more fuller's earth treatment the higher the IFT
b)The higher the IFT the greater receptivity fo DBPC
c)For a given IFT the more DBPC added the longer oxidation life
If reclaim to IFT of approximate 30 then acidity = < 0.2.
Estimates for 1950 have 100 000 000 gal oil in service that could be reclaimed economically and efficiently.

Comments from Audience

(The following text is a discussion among the delegates to the meeting, and has been edited for the purposes of this guide.)

M. Zwelling, Line Material Co

Warns that IFT is a good tool for oxidation testing of oils but not for oils in service because it measures all soluble polar contaminants, some of which are not due to oil deterioration.

J. G. Ford, Westinghouse

All comments on new oil.

J. G. Charest, Penn Power & Light Co

Copyright © 1985 IEEE All Rights Reserved

Copyright The Institute of Electrical and Electronics Engineers, Inc.
Provided by IHS under license with IEEE
No reproduction or networking permitted without license from IHS Not for Resale

Discarded oil when acidity = 1.0; started to reclaim when oil prices increased; now approximately 17 000 gal/yr; use 300 gal/h purifier, add 0.3% DBPC

Cost: 10¢/gal + cost of DBPC.

H. P. Sleeper, Public Service Electric and Gas Co

Noted that much old oil is on hand—of unknown age, type, mixture, etc—questions if reclaiming can be done and inhibitor added effectively.

E. D. Treanor, General Electric

Noted that inhibitors are less effective at high temperatures.

4) LAJOVSKY, W. *Purifying Transformer Oil On the Central Maine Power Co System*. Doble Client Conference Minutes, 1950, pp 10–101,
   NOTE — Uses Honan-Crane purifier—in the field—on energized units; have 2 large tanks (each holds 260 lb Cranite (FE); blotter press, pumps, 300 gal/h; repeat on each transformer after a year; oil returned to transformer is hotter than oil in the transformer; uses 2 tanks in series; first treatment to IFT = 25; oil in service should be reclaimed if IFT < 20; costs to reclaim: 6 to 33¢/gal; high figure for remote locations for example, labor, travel time.
5) BOUGHTER, G. L. *Reconditioning Acid Oils in the Field*. Doble Client Conference Minutes, 1950, pp 10–201.
   NOTES:
   New York State Electric and Gas Corp
   Uses 60–90 mesh fuller's earth; prefers mobile over fixed plant; tests for color, acid, and PF; follows life in transformers with IFT, acidity, and power factor.
6) BURRILL, G. S. Oil *Purification Program is Successful*. Doble Client Conference Minutes, 1950, pp 10–701.
   NOTES:
   Narragansett Electric Co
   In 1948 bought Honan-Crane duplex model 2130; uses at fixed location; reclaim cost: 3¢/gal, not counting investment—in field on energized units.
   Cost: 1 to 5¢/gal—reclaims to IFT of 32.

1951

1) *Doble Oil Committee Report*
   NOTES:
   1950 Questionnaire: 31 reports, 22 reclaim oil, 9 do not; 17 at central location, 14 use portable equipment; primary tests used on oils in service are
   a)IFT
   b)Acidity
   c)Dielectric strength
   d)Power factor
   Of 36 replies only 6 use some type of oxidation test on reclaimed oil
   Of 34 replies 11 reclaim oil in energized units—from 13.2 kV to 160 kV class
   Of 11 replies only one degassifies oil returned to the transformer
   Of 30 replies 20 considered adding inhibitor to reclaimed oil.
   W. Lajovskey (Central Maine) warns against reclaiming energized units in winter—has had several failures through moisture condensation on tap changes.
2) DOBLE, F. C. A *New Concept of Insulating Oil Life Characteristics*. AIEE 52, 1951, p 115.
   NOTE — DOBLE, F. C. *The Reclamation of Insulating Oils*. ASTM Special Technical Bulletin no 152, 1952, pp 14–24. (See 1952, (2) for details.)
3) DOBLE, F. C. *Need for Re-Refining and Inhibiting Used Insulating Oil*. Doble Client Conference Minutes, 1951, pp 10–901.
   NOTE — Not much other than stressing need to reclaim oil and to inhibit such oil.

Copyright © 1985 IEEE All Rights Reserved

Copyright The Institute of Electrical and Electronics Engineers, Inc.
Provided by IHS under license with IEEE
No reproduction or networking permitted without license from IHS Not for Resale

4) CALL, R. G., CLARK, F. M., and McCONNELL, T. A. Evaluation of Mineral Transformer Oil During Service, Part III: An Examination of Selected Transformers. *ASTM Special Technical Bulletin no 135*.
NOTES:
Four transformers—5 years service—as follows:
a)8500 kVA, water cooled with a good grade of commercial oil
b)8500 kVA, water cooled with a medium quality oil
c)8500 kVA, water cooled with a reclaimed oil
d)3750 kVA with a good quality oil
Oil tests run during 5 yr service were: acidity, IFT, sludge accumulation, and bomb test—concluded that none predicted transformer condition; the 8500 kVA water-cooled unit with the medium-quality oil [see (4)(b)] had to be removed from service as hazardous (high internal overheating); had increased water flow to lower top oil temperature; had much sludge deposits; impeded cooling and high temperature rise.
Detroit Edison Comments. If acidity is >0.1 and IFT <20, chances are oil is sludging—their criteria, continue in service until acidity = 0.6 and IFT is 18 or less.
West Penn Power Co Comments. Service oil limits are acidity = 0.5, and IFT = 15.

5) BROWN, D. L. *Performance of a Mobile Refinery*. AIEE Conference Paper, 1951.

6) MILLER, H. L. *Reclamation of Transformer Oils*. Doble Client Conference Minutes, 1951, pp 10–201.
NOTES:
Houston Light & Power Co
Have used two reclaiming systems—first was percolation, abandoned—now use contact process; inhibit all reclaimed oil; present costs including inhibitor = 11¢/gal. Use Youngstown-Miller equipment with Retrol; oil temperature = 275 °F—300 °F—multiple passes; has much data on oxidation studies and studies of oil in transformers.

7) BACON, R. C. *Clay-Treating Methods*. Doble Client Conference Minutes, 1951, pp 10-301.
NOTES:
Doble Engineering Co
Mostly a review paper; most companies use fuller's earth process; strongly recommends adding DBPC to reclaimed oil; warns against clay treating oil containing DBPC at temperatures over 75°C (clay decomposes DBPC at 100°C and higher); describes various processes such as gravity percolation, pressure percolation, contact process, and combination-type equipment.

8) GILL, L. G. *Reconditioning and Handling of Transformer Oil by the Pennsylvania Power and Light Co*. Doble Client Conference Minutes, 1951, pp 10–601.
NOTE — Use Honan-Crane Purivac (fuller's earth plus vacuum dehydration); cost averages approximately 10¢/gal; have equipment on trailer; uses tankers to truck in oil to be reclaimed from a radius of approximately 50 mi.

9) LINDSAY, N. D. *Reclamation of Insulating Oil*. Doble Client Conference Minutes, 1951, pp 10–501.
NOTES:
Hydro Electric Power Commission of Ontario
Have Youngstown-Miller equipment in maintenance shop; Model A-75; batch reclaiming 75 gal.
EXAMPLE: Oil to be treated = acidity 0.4 and IFT = 15; improved to acidity = 0.1, IFT = 34; treatment temperatures 275 °F; cost: 4.8¢/gal not including oil loss, transportation, electricity; have to filter to raise dielectric strength before using; do not add inhibitor to reclaimed oil but expect to add inhibitor in the future.

10) IRVING, R. and THOMPSON, C. N. Diffusion as a Rate-Limiting Factor in the Oxidation of Transformer Oils. London, England: *Journal of the Institute of Petroleum*, Feb 1951.

1952

1) *Doble Oil Committee Report*
NOTES:
1951 Questionnaire: 41 replies; 27 reclaim oil; 14 do not; 7 are planning to reclaim oil; tests commonly used to determine need to reclaim are
a) Acidity
b)IFT
c)Dielectric strength—a few also use power factor and color; for acidity, reclaim if oil IFT = 18-20; after reclaim expect IFT = 30-36 and acidity <0.1; of those reclaiming: 11 add DBPC, 23 do not.

2) DOBLE, F. C. The Reclamation of Insulating Oils. *ASTM Special Technical Bulletin no 152*, pp 14–24.
NOTES:
Excellent, comprehensive review paper plus recommendations.
General: Proper maintenance of oil (reclaiming) will extend life of oil indefinitely (when inhibitor is added); will conserve petroleum and extend life of apparatus.
Oil deteriorates three ways: by contamination, oxidation, and depletion of natural inhibitors.
Reclaimed oil can have < $^1/_2$ the oxidation resistance of new oil, therefore need to add DBPC to reclaimed oil.

Copyright © 1985 IEEE All Rights Reserved

Copyright The Institute of Electrical and Electronics Engineers, Inc.
Provided by IHS under license with IEEE
No reproduction or networking permitted without license from IHS Not for Resale

Tests used on service oils to determine what to do are: need reclaiming if acidity = 0.4-0.7 and IFT = <20; other tests used are color, dielectric strength, power factor, specific gravity, and pour.

Definitions Used:

recondiotioning. The removal of water and solids. Use several types of filters, centrifuges, and vacuum dehydrators.

re-refined. Usually involves fuller's earth or in combination with certain chemicals.

Historical. In 1930 E.H. Steele of the New Bedford Gas and Edison Light Co and in 1944 by Barlow and Bridgegam (same company) described their reclamation procedure for oil: used 1184 gravity H_2SO_4; 2%–3% by weight; stir $^1/_2$ h with air; settle overnight; pump oil to another tank; mix with 3%–4% of sodium silicate; mix $^1/_2$ h with air; settle overnight; — pump oil to 3rd tank; add 4%–6% fuller's earth (200 mesh); mix for 1 h with air; settle overnight; decant oil through filter press; lose approximately 6% of oil.

In 1935 E.F. Walsh (Narragansett Electric Co): treat used oil with trisodium phosphate and fuller's earth; add trisodium phosphate to oil heated to 80 °C; mix for 1 h; allow to separate; drain spent trisodium phosphate; wash with water spray; decant oil through centrifuge; add 200 mesh fuller's earth; agitate for 15 min; settle overnight; wash with hot water; decant through centrifuge; dry by way of a dehydrator or filter press.

In 1036, L. Baskette (Southern California Edison); process used activated carbon; sodium silicate method; to used oil add 2% by wgt of activated carbon and 30% by volume of a 2% sodium silicate solution; gives processing details; need carbon if acidity is over 0.5 to prevent emulsification with the sodium silicate solution.

Most common usage today involves treatment with fuller's earth.

Activated alumina has found limited use; advantages over fuller's earth are more mechanically stable and can reactivate easily; disadvantages are higher cost and oil treated with activated alumina frequently shows a marked rise in steam emulsion number.

Fuller's earth methods are generally of three types

1)Gravity percolation

2)Pressure percolation

3)Contact process

In 1939 R. G. Call (Beech Bottom Power Co) described gravity percolation system; first oil through is overtreated, last oil undertreated; must mix to obtain average properties desired.

Pressure percolation: fast, continuous—again output is graded—first oil through is overtreated, etc.

Thermosiphon bypass arms on transformers; limited application; have used coarse activated alumina or in fuller's earth.

Contact process: use 200 mesh fuller's earth, most efficient and most uniform product; done at elevated temperature; warns against using with inhibited oil; DBPC will be catalyzed by clay (decompose) at 100 °C.

As a guide it takes four times as much clay to reclaim to IFT of 45 than it does to IFT of 30; recommends reclaiming to IFT of 30 to 35.

Recommends that reclaimed oil be oxidation tested with

1)No inhibitor

2)0.1% DBPC

3)0.3% DBPC

A utility's selection of a reclamation method depends upon the type of system, for example, highly concentrated or widespread—if highly concentrated then recommends centralized point using gravity percolation; if widespread system then consider portable pressure percolation.

Comments from Audience

(The following text is a discussion among the delegates to the meeting, and has been edited for the purposes of this guide.)

L.B. Schofield—Commonwealth Edison Co

Cited his company's study using four old reconditioned and cleaned 10 kVA transformers; No 1 filled with oil reclaimed to 30 dynes + 0.6% DBPC, No 2 with oil reclaimed to 46 dynes +0.3% DBPC; No 3 filled with new inhibited oil (0.3% DBPC-probably Shell Diala A); No 4 with oil, reclaimed to 46 dynes + 0.6% DBPC—all aged equivalent loading open, breather for I year—oil tested at 6 month intervals for color, acidity, sludge-on comparative basis; best by far was No 3 (new inhibited oil); next was No 4 (46 dynes + 0.6% DBPC), next No 2 (46 dynes + 0.3% DBPC); worst was No l (30 dynes + 0.3% DBPC)—noted that economics normally dictated reclaiming only to 30 dynes and if inhibitor added used only 0.3% DBPC; during transformer life testing average copper temperature measured by copper resistance—at 12 month period No 1—200°C, No 2 = 150°C, No 3 = 128°C, and No 4 = 158°C—again best by far was new, inhibited oil; untanked and dismantled transformers; only No 3 was clean; other three units had sludged and had clogged ducts; concluded that a used oil reclaimed to 30 dynes plus inhibitor has a life approximately equivalent to using new, uninhibited oil and approximately 1/2 that of new inhibited oil.

Copyright © 1985 IEEE All Rights Reserved

Copyright The Institute of Electrical and Electronics Engineers, Inc.
Provided by IHS under license with IEEE
No reproduction or networking permitted without license from IHS Not for Resale

F. M. Clark, G.E. Co

Suggested study of blends of reclaimed and new oil.

T. A. McConnell—Detroit Edison Co

Disagreed with Doble; stated that oil reclaimed from 30 to 35 dynes with no inhibitor added was at least good for 10 yr service life; also successive reclamations alright; expects a longer life with new oil but not by a factor of 2 or 3 to 1; stated that sludge up to 1/1 in does not impair cooling, if $^{1}/_{8}$ in or more it does impair cooling; theft studies show that the addition of DBPC to oil reclaimed from 30 to 35 dynes has no advantage.

G.E. Fawcett—West Penn Power Co

Stated that oil reclaimed to 45 dynes has 5 times the life of oil reclaimed to 30 dynes but costs 3 times as much; concludes that it is desirable to reclaim to 45 dynes.

E.R. Thomas—Consolidated Edison Co

Cited case of 12000 gal transformer; oil reclaimed to 45 dynes; no inhibitor added; acidity = 0.05

Cost: $13^{1}/_{2}$¢/gal; new oil: 25¢/gal; can sell old oil for burning at 10¢/gal; concludes better to burn oil and replace with new. For N_2 blanketed units expects 25–30 year oil life.

W.G. Walker—Philadephia Electric Co

Suggests reclaim to 30 dynes, add inhibitor, put in old transformer, dissolve out old sludge, etc, then reclaim again to 45 dynes.

G. Von Fuchs—Consultant

Agress with W. G. Walker.

W.C. Milz—Alcoa

Pointed out that free water with fuller's earth blocks the filter but not so if activated alumina is used.

3) BRACEWELL, J. R. *Purifying Transformer Oil in the Field on the Georgia Power Company System*. Doble Client Conference Minutes, 1952, pp 10–301.
   NOTE — Have central location reclamation system in Atlanta; reclaim approximately 100 000 gal/yr from equipment in for repair and from field returns; have two types AH2136 Honan-Crane purifiers on trailers; will have four more; service oil criteria used are: if dielectric strength <20 then blotter press first—reclaim to acidity <0.2 and IFT >21—they also reclaim oil in energized units—for open breather units add DBPC to reclaimed oil.
4) LOTIMER, J. S. *Reclamation of Insulating Oil*. Doble Client Conference Minutes, 1952, pp 10–401.
   NOTES:
   Hydro-Electric Power Commission of Ontario
   Use Youngstown-Miller reclaimer; total reclaiming costs: (labor, materials, overhead, miscellaneous) 13.2¢/gal; after reclamation, acidity = 0.06 to 0.13, IFT 34–38, color $2^{1}/_{2}$; then add DBPC; cost figures are for imperial gallon; for US gal cost = 11¢/gal.
5) MILES, H. C. *US Hoffman Oil Conditioning Equipment.* Doble Client Conference Minutes, 1952, pp 10–601.
   NOTE — Author with US Hoffman Machinery Corp. Market Hoffman oil conditioner; is a clay treatment followed by vacuum dehydration; adsorbent clay is in cartridge form; equipment size ranges from 35 lb to 350 lb of clay; vaporizer is flow under vacuum over a series of trays.
6) FRESCH, S. J. *Houdaille Purivac Design and Engineering Characteristics*. Doble Client Conference Minutes, 1952, pp 10–701.

Copyright © 1985 IEEE All Rights Reserved

Copyright The Institute of Electrical and Electronics Engineers, Inc.
Provided by IHS under license with IEEE
No reproduction or networking permitted without license from IHS Not for Resale

NOTE — Author with Honan-Crane Corp. Describes various types of equipment; corporation uses clay; 140°F operation; has vaporizer (27 in - 29 in Hg V ac); nozzle atomizer type.

7) MASSEY, L. The Deterioration of Transformer Oil—Part I. London, England: *Journal of the Institute Petroleum*, *March 1952*.

8) MASSEY, L. The Deterioration of Transformer Oil—Part II. London, England: *Journal of the Institute Petroleum*, April 1952.

9) MASSEY, L. The Deterioration of Transformer Oil—Part III. London, England: *Journal of the Institute Petroleum*, May 1952.

1953

1) *COMMITTEE REPORT, Doble Oil.*

NOTE — 1952 Questionnaire: 53 replies; 32 reclaim using fuller's earth; activated alumina or similar material: 24 reclaim at a centralized location; 1 uses bypass filter on transformers (Alcoa); 10 reclaim oil in energized units; 16 reclaim oil on deenergized units; 31 do not test reclaimed oil for oxidation resistance; 9 are using some type of oxidation test.

2) PERRY, P. A. *Bowser Method of Insulating Oil Treatment.* Doble Client Conference Minutes, 1953, pp 10–501.

NOTE — As of 1953 Bowser only makes hydrovolifier (a vacuum dehydrator, degassifier)—Brigg's Filtration Co. (a division of Bowser) offers thermosiphon bypass filters packed with activated alumina; Bowser is developing an oil reclaimer consisting of two filters using blocks of fuller's earth followed by vacuum cleaner.

1954

1) LAJOUSKY, W. and THURSTON, H. W. *Operation of Purifiers On the Central Maine Power Company System*. Doble Client Conference Minutes, 1954, pp 10–401.

NOTE — Is a progress report; currently have 2 reclaimers; both Honan-Crane—(1) Purivac and (2) Type R; on trailers; use Purivac unit in the field; process oil in energized units; use IFT as criteria; the R unit used at central location; use IFT, acidity, power factor, and dielectric strength here.

2) SALOMON, T. The Performance Characteristics of Used Insulating Oils. Insulating Oil Symposis, *ASTM Special Technical Publication* no 172, Nov 1954, pp 45–46.

1955

1) *COMMITTEE REPORT, Doble Oil*

NOTES:

1954 Questionnaire: more and more reclaim oil in energized units; reclaiming costs reported from 4-20/gal; of 39 reporting the preferred tests for evaluating oil in service are: dielectric strength
acidity
power factor
IFT
color

Of 39 reporting 30 do oil reclaiming; amounts reclaimed range from 200 to 300 000 gal/yr
Reclamation methods and equipment used:
12 use Honan-Crane
3 use HILCO
2 use percolation (built in-house)
2 use thermosiphon bypass
2 use Youngstown-Miller
1 uses bagged Cranite
1 uses Narragansett trisodium phosphate method
33 add DBPC to the reclaimed oil; most add 0.3%

2) MADDEN, R. F. *Operation of a Mobile Oil Reclaimer by the Ohio Power Co*. Doble Client Conference Minutes, 1955, pp 10–601.

NOTES:

Reclaimer designed by American Gas and Electric Service Corp. Use two model No 3136H Honan-Crane fuller's earth filters (450 lb 60/90 mesh for each); also have Alsop filter and blotter press

Copyright © 1985 IEEE All Rights Reserved

Copyright The Institute of Electrical and Electronics Engineers, Inc.
Provided by IHS under license with IEEE
No reproduction or networking permitted without license from IHS Not for Resale

Criteria for reclaimed oil are acidity 0.1, color 2 $^{1}/_{2}$,power factor 0.2%, dielectric strength 30; add 0.3% DBPC.
Use reclaimer on both energized and de-energized units; draw oil from bottom and return to top.
WARNING: Have had problem if treat hot oil—can put water back into oil from the fuller's earth.

3) *Activated Alumina Maintenance Program—Power System Oils Alcoa*, Aluminum Company of America, 1955.

1956

COMMITTEE REPORT, Doble Oil

NOTES:
Results of 1955 Questionnaire: 15 reported reclaiming on energized units. The kV class limits reported:
3 limit to 13.8 kV Class max
3 limit to 34 kV Class max
1 limit to 44 kV Class max
4 limit to 69 kV Class max
2 limit to 110 kV Class max
1 limit to 132 kV Class max
1 limit to 161 kV Class max
Also cited are a number of precautions to be taken.

1957

1) COMPTON, O. R. *Reclaiming of Oil on the Virginia Electric and Power Co*. Doble Client Conference Minutes, 1957, pp 10–101.
NOTE — Use central reclaiming location; originally started with Honan-Crane alone then changed to trisodium phosphate treatment first, followed by Honan-Crane; reclaimed oil: acidity 0.1, IFT 30; add DBPC; cost: 7¢/gal including inhibitor: cost: new oil costs 36¢/gal.
2) WHITFIELD, W. C. *Oil Reclamation on the Philadelphia Electric Co System*. Doble Client Conference Minutes, 1957, pp 10–701.
NOTE — Criteria used for oil needing reclamation IFT = 17; use Honan-Crane Purivac; 300 gal/h; on a trailer; use on de-energized units only; reclaimed oil has acidity = 0.1, IFT > 30—then add 0.3% DBPC; cost: range from 7 to 31¢/gal; average 15¢/gal.

1958

1) CLARK, F. M. *Insulation Guide Book*. Chapter VIII, Insulating Liquids, 1958, p 13.
NOTES:
Recommends evaluating oils in service by dielectric strength, color, acidity, condition, IFT; utilities use two types of practices:
a)Some use oil until its condition is a hazard_to the equipment
b)Others use preventative maintenance
For (a), oil criteria are colors 2 to 4, acidity to as high as 1.0, sludge content of oil from trace to 0.1-0.05% by wgt of oil.
For (b) type of utility criteria much more restrictive Cites two types of reclaiming
a)Fuller's earth treatment
b)Partial refining by H_2SO_4 followed by fuller's earth
Cautions against depletion of normal inhibitors and aromatics.
Also cites thermosiphon percolation through either fuller's earth or activated alumina.
2) HUGES, A. V. *Testing and Maintenance of Quality Transformer Oil; A Guide to the Utility Engineer of the Methods Available for Testing and Renovating Used Oil — Transmission and Distribution*, vol 10, Mar 1958, pp 12–13, 34.
NOTE — Put out by Kuhlman Electric Co. A review article only—nothing new.
3) GARRETT, V. and MURRAY, R. *Reclaiming Transformer Oil: Design and Operation of Alabama Power Company's New Plant*—Doble Client Conference Minutes, 1958, pp 10–201.
NOTE — In the past had used a hot activated clay; slurry process; now reclaim at a fixed location; use two pressure percolation towers; at a pressure of 30 lbf/in^2; fuller's earth-no heat-located outdoors; output varies from 100 to 150 gals/h; found that if ratio of column height to diameter is >2:1 won't get channeling; - add DBPC to

Copyright © 1985 IEEE All Rights Reserved

Copyright The Institute of Electrical and Electronics Engineers, Inc.
Provided by IHS under license with IEEE
No reproduction or networking permitted without license from IHS Not for Resale

reclaimed oil; cost: >7–$^1/_2$¢/gal including cost of new oil makeup and inhibitor; final oil has acidity 0.1, IFT >30.

4) THOMPSON, W. W. *Oil-Reclaiming and Oil-Handling Practices on the Tennessee Valley Authority Transmission System*. Doble Client Conference Minutes, 1958, pp 10–401.

NOTE — Most reclaiming done at centralized location covering units in for repair and oil trucked in from the field; also do a little reclaiming in the field with a portable Honan-Crane percolation outfit; use fuller's earth; service oils evaluated by dielectric strength, acidity, IFT; reclaim 1200 to 2500 gal/d at central location; reclaimed oil has IFT >30, acidity 0.05 to 0.1.

5) *AIEE Industry Questionnaire on Insulating fluids*.Conducted by the Insulating Fluids Subcommittee of the Transformers Committee.

NOTES:

96 US and Canadian users of transformer oil replied; information obtained reported in AIEE No 64-1962[8], Appendix; covers utility practices as of 1958; information presented as averages of replies received; of interest to oil reclamation is the following information:

<5% of those reclaiming oil test for oxidation stability, inhibitor response, or inhibitor presence.

Average criteria for oil to be
a)Continued in service
b)To be reclaimed
c)To be discarded for transformers are:

	Alright To Continue In Use	**To Reclaim**	**To Discard**
Dielectric strength (D877)	23	—	<14
Acidity	0.4	>0.4	>1.0
IFT	19	<18	<14
PF—20°C	1.4	>1.4	—
Color	$3^1/_2$		
Condition	Clear		
As Above for Breakers			
Dielectric strength (D877)	24	<20	< 15
Acidity	0.5	>0.5	>1.0
IFT	18	<18	—
PF—20 °C	1.4	—	—
Color	$3^1/_2$	—	—
Visual	Clear	—	Dirty, heavy carbon

Average Quality of Reclaimed Oil Reported

	From Transformers	From Breakers
Acidity	0.16	0.17
Dielectric strength	27	26
IFT	25	28
Color	$1^1/_2$	$1^1/_2$
PF—20°C-%	0.8	0.9

60% Reporting reclaim oil from transformer

[8]This standard has been revised and the new designation is ANSI/IEEEC57.106–1977.

Copyright © 1985 IEEE All Rights Reserved

Copyright The Institute of Electrical and Electronics Engineers, Inc.
Provided by IHS under license with IEEE
No reproduction or networking permitted without license from IHS Not for Resale

32% At central location
13% In the field
15% Do both
55% Use fuller's earth
5% Use activated alumina
3% Use alkali wash
41% Reporting reclaim oil from breakers
39% Use fuller's earth
2% Use activated alumina
35% Add DBPC to reclaimed transformer oil
17% Add DBPC to reclaimed breaker oil; most add 0.3% DBPC

1959

PETERSON, R. H. *Reclaiming Insulating Oil on the Northern States Power Company System*. Doble Client Conference Minutes, 1959, pp 10–501.

NOTE — Use US Hoffman Machinery Corp; equipment: 2 reclaiming tanks, pre-heater, vaporizer; 600 gal/h if tanks run in parallel; 300 gal/h if in series; have at centralized point in repair shop; scrap oil if acidity is 1.0 or higher; reclaim to acidity = 0.1 or less and IFT >30; add DBPC; also pour depressant if needed; cost: 13¢/gal; reclaim 95000 gal/yr.

1960

1) *COMMITTEE REPORT, Doble Oil*
   NOTE — Replies to 1959 Questionnaire: 60 replies; 40 reclaim oil (5 years ago 30 reclaimed oil); total gallons reclaimed in 1959 = >2 000 000 gal; individual companies reclaimed from 2000 gal to 500 000 gal annually; most add DBPC to reclaimed oil.
2) BRACEWELL, J. R. *Field Performance of Reclaimed Inhibited Oil*. Doble Client Conference Minutes, 1960, pp 10–101.
   NOTE — Georgia Power Co: reclaim oil in energized transformers; reclaim oil twice, 2–3 years apart; add 0.3% DBPC each time; after second reclamation oil has acidity 0.05, IFT 30; after 8 years service still no signs of sludging.
3) McCOY, J. R. *Oil Conditioning with the CFC Honan-Crane Purivac*. Doble Client Conference Minutes, 1960, pp 10–201.
   NOTE — Author with Indiana Commercial Filters Corp: use CFC Honan-Crane Purivac; have two fuller's earth tanks; use either in parallel or in series; heat oil to operating temperature; have spray-type dehydrator (150/lbf)/in^2; equipment type varies in capacity as 250–300 gal/h, 500–600 gal/h, 1000 gal/h or higher; claims can reclaim for 15¢/gal; stated that Public Service of Indian reclaimed 1 000 000 gal in 1959 for <10¢/gal.

1962

1) WEISS, H. *Report on the Work of Study Committee No 1* (Insulating Oils) CIGRE Report no 155, 1962, pp 1–8.
   NOTE — No information on oil reclamation.
2) *AIEE No 64-1962, Guide for Maintenance of Insulating Oil.*
   NOTES:
   Section 9 covers reclaiming of service-aged insulating oil; gives detailed description of reclaiming by absorbents such as fuller's earth and activated alumina; covers such methods as gravity percolation, pressure percolation, contact process together with schematic diagrams.
   Covers methods suitable for various types of utility systems.
   Other reclamation methods described are trisodium phosphate, activated carbon sodium silicate, thermosiphon bypass.
   Covers reclamation of circuit-breaker oil.
   Appendix covers utility survey taken in 1958; see 1958 for data reported.
   Section 5. covers economic factors to consider to justify reclamation depending upon type of utility system.
3) TULIOLSKY, A.M. *Molecular Sieve Dehydrations for Insulating Oil*. IEEE Conference Paper 1962, pp 62–1191.

Copyright © 1985 IEEE All Rights Reserved

Copyright The Institute of Electrical and Electronics Engineers, Inc.
Provided by IHS under license with IEEE
No reproduction or networking permitted without license from IHS Not for Resale

NOTE — A molecular sieve of the sodium form of a synthetic zeolite is shown to be an excellent absorbent for removing trace quantities of water from insulating oil. The sieve material can be regenerated for reuse. The type 4A molecular sieve of 8 · 12 mesh beads is recommended. It will saturate with 24% by weight of water.

1963

1) BANEVICIUS, V. A. (Cleveland Electrical Illuminating Co.) SLOAT, T. K. (Westinghouse). *Summary of Insulating Oil Studies in Distribution Transformers*. IEEE 63-1014.

NOTE — Report on 5 yr study (joint) using new and reclaimed oils in new and reconditioned transformers.
Reclaimed oils by fuller's earth to
a) IFT = 30
b) IFT= 45
then added 0.3% DBPC.
Also tried H_2SO_4 re-refined type of reclamation.
Conclusions After Life Tests
i) For open type reconditioned transformers the degree of reclamation and the addition of DBPC is of little value due to presence of deterioration residuals in coils, etc.
ii) For tightly sealed transformers same degree of oil aging obtained for either new or reclaimed oils; of inhibitor of little value; very tittle difference between use of new or reclaimed oil
iii) Question value of IFT test in following oil life in transformers; prefers acidity test.
iv) Concludes that use of reclaimed oil with 0.3% DBPC in used transformers is not nearly as good as use of either new, uninhibited oil, or new inhibited oil.

2) FORD, J. G. and MURRAY, ROYAL. *Reclaimed Insulating Oil.* Transmission and Distribution, Sept 1963, pp 33–35

1964

KERNAGHAN, S. W. *General Electric Field Manual For Insulating Oil*. TIS 64DT204 Sept 27, 1964.

NOTES:
Service oils are in sludging zone if acidity >0.2
Service oils are in sludging zone if IFT <20
Recommends against using reclaimed or reconditioned circuit-breaker oil in transformers.
States that most common methods used to reclaim transformer oil involve use of fuller's earth; some use chemical treatment first, followed by earth treatment; processes used are pressure or gravity percolation (30–60 mesh clay) or contact process using 80–300 mesh clay (very fine)
Refers to AIEE No 64-1962.
If multiply oil acidity by 1 to 2 this equals pounds of fuller's earth needed to reclaim 1 gal of oil to acidity of 0.1.
After reclaiming, oil should have acidity 0.1, IFT >30 plus acceptable dielectric strength H_2O content and visual condition.
Recommends addition of 0.3% DBPC to all reclaimed oil.

1965

1) EKSTRAND, J. G. and MOORE, L. E. *Reclaiming Insulating Oil in Energized Transformers Using a Honan-Crane Purivac*. Doble Client Conference Minutes, 1965, pp 10–101.

NOTES:
Are with Consumers Public Power District (Nebraska)—covers whole state.
Honan-Crane Purivac; on trailer; treat rate 250-500 gal/h; have 2 fuller's earth treater tanks; oil heater; vacuum dehydrator; use on energized units; draw oil from bottom; return to top; oil heated to 140 °F; vacuum 28 in Hg; given Honan-Crane chart relating lb/gal; fuller's earth needed to reduce acidity from that of oil to be reclaimed to desired value; run 2 units in series; change out first when clay is exhausted; oil in service tests are dielectric strength, acidity, IFT.
Found alright to reclaim arced oil from step voltage regulators—did remove carbon.
For badly sludged transformers need to repeat reclaiming once or twice at yearly intervals; much better procedure than untanking and cleaning.
Over $3^1/_2$ yr period did 466 energized units; 199 spare units; 113 000 gal; needed 11% makeup oil.
Before reclaiming: average acidity = 0.48; dielectric strength 33; after reclaiming: acidity 0.1; dielectric strength >35.
Cost 40¢/gal; new oil cost 55¢/gal.

Copyright © 1985 IEEE All Rights Reserved

Copyright The Institute of Electrical and Electronics Engineers, Inc.
Provided by IHS under license with IEEE
No reproduction or networking permitted without license from IHS Not for Resale

2) BARONOWSKI, L. B. *Vacuum Dehydration of Electrical Oils*. Doble Conference, 1965.
NOTE — Removal of water and air becomes one of the most important functions of the transformer purification systems. New vacuum dehydration processes are well suited to portable applications—even the largest transformers.

3) THOMPSON, W. W. *Testing and Evaluating the Properties of Various Filter Media*. Doble Client Conference, 1965.
NOTE — It is shown that a cellulose asbestos medium is superior to kraft paper for carbon removal from transformer oil. Predrying of the cellulose asbestos is necessary for water removal.

1967

WILLIS, MELVIN. Test Program Demonstrates Economy of Transil Oil Filtering Media. *Electric Light and Power*, May 1967.

1968

HARLAND, R. F. *New Asbestos/Cellulose Filter Media Cuts Cost of Conditioning Transil Oil*. Doble Client Conference, 1968.

NOTE — Asbestos/cellulose filters are less costly than an equivalent filter presses. Eliminates oil spillage, atmosphere contamination, and provides rapid cartridge changing.

1969

1) IEEE No 64, 1969, IEEE *Guide for Acceptance and Maintenance of Insulating Oil in Equipment.*
NOTES:
This is a revision of AIEE No 64, 1962. See 1958 for more information.
See 1962 (2); this issue has no changes covering reclamation.
Appendix covering 1958 industry survey added; see 1958 (5) covering survey data of interest.

2) CASEY, R. F. *Oil Handling and Oil Reclaiming Practices of Ohio Edison Co*. Doble Client Conference Minutes, 1969, pp 10–101.
NOTE — Have centralized reclaiming (call it re-refining); use fuller's earth gravity percolation; charge of fuller's earth = 6000 lb; oil head = 2000 gal; reclaim to acidity = 0.1; add 0.3% DBPC to reclaimed oil; rate = 66gal/h; cost 11¢/gal not counting makeup oil; oil brought in from field tanker and from retired units.

3) EGGLESTON, C. W. *Reclaiming Oil in Energized Transformers at Remote Locations*. Doble Client Conference Minutes, 1969, pp 10–201.
NOTES:
US Bureau of Reclamation, Rio Grande Project: reclaimed oil in energized units using Bowser-Brigg's unit; consists of two earth units (each with 150 lb of fuller's earth) plus vacuum dehydrator; oil preheated to 140°F; rate 500-600 gal/h; used columns in series.
Much oil to be reclaimed had high power factor, low IFT, and sodium soaps present.
Oil tests used dielectric strength, power factor, acidity, and IFT;
Tested oil
a)As withdrawn from transformer
b)After dehydrator
c)As returned to transformer
In general reclaimed criteria for acidity and: IFT reached before acceptable power factor.
Vacuum = 25 in Hg; added 0.3% DBPC to reclaimed oil.
As average, oil to be reclaimed dielectric strength = >30; acidity from 0.04 to 0.4; IFT 16 to 26; power factor 025 to 7.2.
Reclaimed oil averaged dielectric strength 30^{+}; acidity 0.02–0.03; IFT 36–42; power factor 0.07 to 0.2.
Average fuller's earth = 0.35 lb/gal
Makeup oil = 5.6%
Cost to reclaim including makeup = $0.366/gal.
New oil cost replacement = $0.59/gal.

Copyright © 1985 IEEE All Rights Reserved

Copyright The Institute of Electrical and Electronics Engineers, Inc.
Provided by IHS under license with IEEE
No reproduction or networking permitted without license from IHS Not for Resale

1970

1) MYERS, S. D. *Re-Refining Transformer Oil*. Iron and Steel Engineer, March 1970, pp 76–80.
NOTES:
Calls reclaiming re-refining; uses fuller's earth; treats oil in energized or de-energized units; author owns consulting firm S. D. Myers, Inc; processes oil by contract to utilities, industrials, etc. States that first oil degradation products are fatty acids then alcohol, lacquers, varnish, water, metallic soaps, sludge, etc.
Evaluates oil in service by dielectric strength; acidity; IFT; oil needs processing if acidity >0.25 and IFT <20; also dielectric strength <25; uses IFT primarily as process control.
Process for oil in energized units = draw from bottom; pump (840 gal/h) to heater (800000 Btu/h) to pump; to fuller's earth beds (15 ft—1350 lb of earth) to vacuum chamber (28.5 in vacuum); to pump; to top of transformer; also have 875 gal new oil storage; DBPC added after vacuum chamber.
2) BLONDET, H. H. *The Economics of a Small Batch Oil Reclaiming Process*. Doble Client Conference Minutes, 1970, pp 10–101.
NOTES:
Public Service of Oklahoma: practice until 1969 was to replace old oil with new oil and to burn old oil; since then there has been no outlet for old oil; built own reclaimer; small, batch—had 23 000 gal needing reclaiming; 4 pressure percolation; used Cranite cartridges; ran 2 units in parallel and each group of 2 in series; 2 Cranite cartridges per unit; 28 lb of fuller's earth in each cartridge; rate = $3^1/_2$ gal/min; found needed 3 passes for oil.
End product IFT = 30^+, acidity <0.1
Cost: 8–9¢/gal
Oil to be reclaimed: color 2, % power factor 0.35, IFT 15, dielectric strength 25, acidity 0.2.
After processing: color $1^1/_2$, % power factor 0.02, IFT 32, dielectric strength 46, acidity 0.06.
3) MOORE, L. E. *EHV Oil-Treatment Equipment Pays Own Way*. Transmission and Distribution, Sept 1970, pp 56–60.
NOTE — Oil-treatment equipment mounted on a trailer has considerably increased the life span of EHV transformers and reactors. Used in conjunction with a cold trap the equipment does an excellent job of removing moisture from transformer oil.
4) ANDERSON, R., HYYNYLAINEN, S. and PONNI, K. *Moisture of Insulation as a Measurement and Maintenance Problem in Oil Impregnated Power Transformers*. International Conference on Large, High-Tension Electric Systems, 1970 Session, Aug 24-Sept 2.
NOTE — Measurement of moisture content of paper insulation in oil-impregnated transformers in service has proved to be difficult. A series of moisture distribution equilibrium curves for different oil qualities have been measured. Drying method for wet transformers in service are also discussed. Results of molecular sieve drying experiments are given.

1971

1) MYERS, S. D. *Accident Prevention Bulletin*. Transformer Consultants.
NOTES:
See 1974 for update issue; this also covers Kemper Insurance Co. (Mutual Boiler and Machinery Insurance Co) information.
Considers critical acidity value for oil in service to be 0.25; states that usually this value is reached in 15 yr for power transformers >501 kVA; reached in 10 yr for distribution transformers <500 kVA, and reached in 5. yr for furnace or rectifier transformers.
2) SLOAT, T. K. *Survey of Current Utility Practices for Testing and Treating Insulating Oil.* Tenth Electrical Insulation Conference, Chicago, IL, Sept 2, 1971.
NOTES:
Survey of industry made in 1970 for Insulating Fluids Subcommittee of IEEE Transformers Committee: data is included in Appendix of ANSI/IEEE C57.106-1977, Guide for Acceptance and Maintenance of Insulating Oil in Equipment.
Questionnaire sent to 164 US and Canadian utilities; received 143 replies.
Reconditioning defined as removal of water and solids by use of filters, centrifuge, vacuum dehydrator, etc.
Reclamation defined as removal of oil soluble deterioration or contamination products by use of fuller's earth or in combination with certain chemicals.

Copyright © 1985 IEEE All Rights Reserved

--`,,`-`-`,,`,,`,`,,`---
Copyright The Institute of Electrical and Electronics Engineers, Inc.
Provided by IHS under license with IEEE
No reproduction or networking permitted without license from IHS Not for Resale

Transformers Average Properties			
	Oil Alright to Continue In Service	**Oil to Be Reclaimed**	**Oil to Be Discarded**
Dielectric strength	24 (23)	22	17
Acidity	0.36 (0.40)	0.40 (0.40)	0.75 (1.0)
IFT	21 (19)	18 (18)	16 (14)
Power factor 20°C	1.0 (1.4)	1.6 (1.4)	3.3
Water content	25	60	75

NOTES:

Numbers in brackets from 1958 survey.

The higher the voltage class, the tighter requirements for oil to continue in service.

Of those reclaiming oil 40% use a filter press, 33% use cartridge type filters, 18% have vacuum dehydrators, and 9% use a centrifuge.

After reclaiming average properties are dielectric strength 28, acidity 0.15, power factor 0.36, IFT 30, D1816 dielectric strength 24, water 19.

54% reclaim oil from transformers, 96% use fuller's earth, 4% activated alumina.

For every gallon of oil reclaimed, 7 gal are reconditioned.

14% add DBPC to reconditioned oil, 43% to reclaimed oil (usually 0.3% by wgt); None do any oxidation tests on the oil.

Circuit Breakers Average Properties			
	Oil Alright to Continue In Service	**Oil to Be Reclaimed**	**Oil to Be Discarded**
Dielectric strength (D877)	25 (24)	21 (20)	16 (15)
Power factor 25°C	1.0 (1.4)	1.4	2.3
Acidity	0.35 (0.5)	0.42 (0.5)	0.77 (1.0)
Dielectric strength (D1816)	18	—	—
Water	50	80	100
IFT	24 (18)	19 (18)	12

NOTES:

Numbers in brackets from 1958 survey.

Most reclaim breaker oil using fuller's earth, 16% add DBPC (0.25% by wgt)

Reclaimed circuit breaker oil average properties are: dielectric strength (D877) 27; power factor 25°C = 0.70; acidity 0.20; dielectric strength (D1816) 21; water 40; IFT 30.

The overall average oil/utility reclaimed was 50 000 gal/yr

36 utilities reclaim from 0 to 25 000 gal/yr

12 utilities reclaim from 25 000 to 100 000 gal/yr

12 utilities reclaim from 100 000 to 1000 000 gal/yr

Copyright © 1985 IEEE All Rights Reserved

Copyright The Institute of Electrical and Electronics Engineers, Inc.
Provided by IHS under license with IEEE
No reproduction or networking permitted without license from IHS Not for Resale

1972

DOWNEY, A.M. and GOODALL, A. W. *Discussion of the IEEE Survey of Current Utility Practices for Testing and Treating Insulating Oil.* Doble Engineering Conference, 1972.

NOTE — A comparison is made between the recommended Doble test methods and limits for transformer oils in service with those reported in the IEEE survey which are a statistical treatment of utility data.

1973

1) *Summary of Replies to the 1973 Technical Questionnaire on Insulating Fluids*. Doble Clients Conference Minutes, 1973, IF73.
   NOTES:
   Is it economical to reclaim oil removed from equipment?—88 replies; 49 yes; 39 no
   Types of oil reclaimed: from transformers 53; from breakers 42; from switches 18
   Equipment used to reclaim oil:
   1 = asbestos—cellulose filter + dehydrator
   20 = clay treater only
   35 = clay treater + dehydrator
   1 = activated alumina bypass
   1 = filter but no clay
   Scrap oil disposal: 92 replies
   5 pay disposal company
   18 use as dust control on roads
   1 uses for mosquito control
   1 uses for floor sweep compound
   4 use for weed control
   2 sell for nonelectric use
   1 discards using private dump
   17 sell to salvage company
   2 give to salvage company
   1 uses for nonelectric use
   6 have no oil to scrap
   2 looking for disposal means
2) KNORR, L. J. *Clay Filtering of Insulating Oil*. Doble Client Conference Minutes, 1973, pp 10–601.
   NOTES:
   US Army Corp of Engineers, Omaha District: had 150 000 gal of breaker and transformer oil needing reclamation; bought Hilliard Corp equipment (Elmira, NY); two tanks—each with ten fuller's earth filter cartridges (35 lb each)—mounted on trailer—operate treaters in series. Breaker oil IFT improved from 18–25 to 35; in general, final reclaimed oil has dielectric strength (D1816) of 30, acidity <0.1.
   Reclaiming cost = 8¢/gal
   New oil cost = 45¢/gal
   Averaged $7^1/_2$ gal/lb of clay
   Do not reclaim on energized units.
3) DOWNEY, A.M. *A Review of Testing Methods as Applied to Insulating Oils.* Doble Engineering, 1973.
4) COMMITTEE REPORT, Doble Oil.—Vacuum Processing Temperatures for Oil, 1973.

   NOTE — Micron-range vacuum are required for successful drying of paper, but only modest heat and vacuum are needed to obtain low moisture and air content of the oil itself. Except under very severe conditions is there much chance of removing much DBPC.

1974

MYERS, S. D. *How To Live with Today's Transformer Oil Shortage*.

NOTES:
S. D. Myers Co is a consulting firm contracting to utilities, etc to reclaim oil, to treat oil in energized transformers, etc
To classify oils in use tests applied are dielectric strength, water, color, acidity, IFT
They call reclaiming re-refining; use fuller's earth treat

Copyright © 1985 IEEE All Rights Reserved

Copyright The Institute of Electrical and Electronics Engineers, Inc.
Provided by IHS under license with IEEE
No reproduction or networking permitted without license from IHS Not for Resale

Oil needing reclamation has color from orange to red to brown to black; acidity 0.16–0.40 or higher; IFT 18–24 or lower; also check visual condition
Re-refined oil (reclaimed) has
Dielectric strength 35 kV min
Acidity 0.05 max
IFT 36 min
When treat oil in a transformer either in service (energized) or out of service they call it sludge purging.

1975

1) *Summary of Replies to the 1975 Technical Questionnaire on Insulating Fluids*. Doble Clients Conference Minutes, 1975, IF75.
NOTES:
Do you have clay treatment facilities? 56 yes, 38 no Do you treat oil hot or cold? 27 hot, 18 cold
If treat hot oil at what temp?—I as low as 20–25 °C, 1 as high as 85–90 C, 22 in range of 50–80 °C
Properties of Reclaimed Oil
Dielectric strength; 33 replies, only 5 use D1816 (require from 22 kV--40 kV); for D877 very few, most do not specify IFT; 10 replies, 1 > 17, 3 > 36, 5 > 40, 1 > 45
Power factor; 9 replies, I = 0.05, 4 = 0.1, 2 = 0.25, I = 0.5, 1= 0.7
Acidity; 33 replies, 3 (0.02 to 0.08), 5 <0.05, 22 <0.1, 2 <0.15, 1 <0.4
Color; 4 replies, from 1 to $3^{1}/_{2}$
Inhibitor content; 2 replies, 0.2%, 0.3%
Pour point; 2 replies, <−40
Viscosity; 1 = 65
Flash point; 1 = 130 °C
Does clay have effect on inhibitor in oil?
If oil is treated hot; 11 yes, 9 no
If treated when cold; 5 yes, 9 no
The removal of DBPC by clay believed by 7.
2) GIBSON, G. L. *Field Treating Transformer Oil*. Transmission and Distribution, Oct 1975.
NOTE — Louisiana Power and Light employs a mobile degasifier and clay treating system to install new transformers and maintain old units under the best possible conditions in the field.
3) POVAZAN, E. *Modern Techniques in Processing Transformer Oils*. Keene Corporation of Canada.
NOTE — This paper reviews the present state of knowledge regarding transformer oil treatment by various separation and purification techniques, and theft combinations. New concepts and equipment for field recycling of highly contaminated oils, due to aging or equipment failure, are described. The thermo-vacuum process is illustrated as essential in the modern maintenance of transformer oils. Absorptive treatment of oils by fuller's earth is the principal techniques in oil recycling, which is particularly important in the scope of present day conservation and pollution trends. The combination of the thermo-vacuum process and fuller's earth treatment with existing filtration techniques, is illustrated as having a complete capability of transformer oil reconditioning or recycling.

1976

1) *ANSI/IEEE C57.106—1977 (Revision of IEEE Std 64–1969) —Guide for Acceptance and Maintenance of Insulating Oil In Equipment.*
NOTES:
1977 revision has passed all requirements as of Sept 1976.
Main body of guide in sections covering reclaiming methods, costs, addition of DBPC, etc is identical to the 1969 and 1962 issues.
Appendix contains results of new industry survey (1970) as compared to 1958 survey. This information is reported in 1971 (2).
2) TOMSHAW, J. and PADULA, J. *Fly Ash as a Reclamation Agent for Used Insulating Oils*. Public Service Electric and Gas Company, Doble Client Conference, 1976, pp 10–704.
3) RAAB, E. L. *General Electric's Philosophy on the Use of Reclaimed Oil in New Electrical Equipment Under Warranty*. Doble Client Conference, 1976, pp 10–901.

--`,,`-`-`,,`,,`,`,,`---
Copyright © 1985 IEEE All Rights Reserved
Copyright The Institute of Electrical and Electronics Engineers, Inc.
Provided by IHS under license with IEEE
No reproduction or networking permitted without license from IHS
Not for Resale

1977

BARANOWSKI, LES B. and KELLY, J. J. Transformer Consultants *An Update on the Reclamation of Insulating Oils*. Doble Annual Client Conference, April 1977.

NOTE — A comprehensive presentation of procedures, selection of oils for reconditioning, removal of sludge from aged transformers, and some current economics on oil reclamation.

3) LAMPE, W. EPICAR, E. and CARRANDER, K. *Continuous Purification and Supervision of Transformer Insulation Systems in Service*. Ludvilca, Sweden: ASEA, 1977.
4) JOHNSON, GARY *Purify Oil at Lowest Cost:* Tacoma, Wash Light Division, Dept of Public Utilities, Transmission and Distribution, Sept 1977, pp 36–39.
5) PARRISH, R. H. and KELLY, J. J. *Desludging of Energized Power Transformers. Proceedings of the 13th Electrical/Electronics Insulation Conference, IEEE-NEMA*, Sept 1977, p 146.
6) Extend the Life of T/D Transformers Through Energized Sludge Removal, *Electric Light & Power*, Dec 1977.
7) ROEHRIG, C. R. *Reclaiming Transformer Insulating Oil*. Plant Engineering, Sept 15, 1977, p 163.

1979

1) PARRISH, R. H. and KELLY, J. J. *Desludging Energized Oil-Filled Transformers*. Plant Engineering, Oct 4, 1979, p 101.
2) MURPHY, J. C. *Oil Reclamation Saves 76% over Alabama Power's. New Oil Costs*. Alabama Power Company, Doble Clients International Conference, April 2-6, 1979. *Electric Light and Power*, April 1979.
3) MURPHY, J. C. *Operating Experience of a Large Insulating Oil Reclamation Plant.* Doble Clients Conference, 1979, pp 10-601.

1980

1) TRYTKO, E. and O'BRIEN, M. A. *Transformer Oil Maintenance Prevents $1 Million Expenditure*. Plant Services, May 1980, p 17.
2) *A Study of the Factors Affecting the Efficient Reclamation of Degraded Electrical Insulating Oil*. British Columbia Hydro and Power Authority, RP 77-70.
3) MYERS, S. D. TMI *Evaluates—Transformer Oil Treatment Versus Transformer Desludging*, 1980.

Publication Date Not Recorded

1) *Reclaiming Insulating Oils with Activated Clays*. Engelhard Minerals and Chemicals Corp, pl.
2) McCOY, J. R. *Insulating Oils.* Indiana Commercial Filters Corp, p 10.
3) McCOY, J. R. *Filtration Technology As Applied to Fuller's Earth.* The Carborundum Co, p 3.

Copyright © 1985 IEEE All Rights Reserved

Copyright The Institute of Electrical and Electronics Engineers, Inc.
Provided by IHS under license with IEEE
No reproduction or networking permitted without license from IHS
Not for Resale