IEEE Std 628-2001
(Revision of
IEEE Std 628-1987)

IEEE Standard Criteria for the Design, Installation, and Qualification of Raceway Systems for Class 1E Circuits for Nuclear Power Generating Stations

Sponsor

**Nuclear Power Engineering Committee
of the
IEEE Power Engineering Society**

Approved 5 January 2001

IEEE-SA Standards Board

Abstract: Criteria for the minimum requirements in the selection design, installation, and qualification of raceway systems for Class 1E circuits for nuclear power generating stations is provided. It also prescribes methods for the structural qualification of raceway systems for Class 1E circuits.
Keywords: cable tray, conduit, design-by-rule, duct line, raceways, seismic

---

The Institute of Electrical and Electronics Engineers, Inc.
3 Park Avenue, New York, NY 10016-5997, USA

Copyright © 2001 by the Institute of Electrical and Electronics Engineers, Inc.
All rights reserved. Published 23 March 2001. Printed in the United States of America.

Print: ISBN 0-7381-2718-3 SH94899
PDF: ISBN 0-7381-2719-1 SH94899

No part of this publication may be reproduced in any form, in an electronic retrieval system or otherwise, without the prior written permission of the publisher.

Copyright The Institute of Electrical and Electronics Engineers, Inc.
Provided by IHS under license with IEEE
No reproduction or networking permitted without license from IHS
Not for Resale

IEEE Standards documents are developed within the IEEE Societies and the Standards Coordinating Committees of the IEEE Standards Association (IEEE-SA) Standards Board. The IEEE develops its standards through a consensus development process, approved by the American National Standards Institute, which brings together volunteers representing varied viewpoints and interests to achieve the final product. Volunteers are not necessarily members of the Institute and serve without compensation. While the IEEE administers the process and establishes rules to promote fairness in the consensus development process, the IEEE does not independently evaluate, test, or verify the accuracy of any of the information contained in its standards.

Use of an IEEE Standard is wholly voluntary. The IEEE disclaims liability for any personal injury, property or other damage, of any nature whatsoever, whether special, indirect, consequential, or compensatory, directly or indirectly resulting from the publication, use of, or reliance upon this, or any other IEEE Standard document.

The IEEE does not warrant or represent the accuracy or content of the material contained herein, and expressly disclaims any express or implied warranty, including any implied warranty of merchantability or fitness for a specific purpose, or that the use of the material contained herein is free from patent infringement. IEEE Standards documents are supplied "**AS IS**."

The existence of an IEEE Standard does not imply that there are no other ways to produce, test, measure, purchase, market, or provide other goods and services related to the scope of the IEEE Standard. Furthermore, the viewpoint expressed at the time a standard is approved and issued is subject to change brought about through developments in the state of the art and comments received from users of the standard. Every IEEE Standard is subjected to review at least every five years for revision or reaffirmation. When a document is more than five years old and has not been reaffirmed, it is reasonable to conclude that its contents, although still of some value, do not wholly reflect the present state of the art. Users are cautioned to check to determine that they have the latest edition of any IEEE Standard.

In publishing and making this document available, the IEEE is not suggesting or rendering professional or other services for, or on behalf of, any person or entity. Nor is the IEEE undertaking to perform any duty owed by any other person or entity to another. Any person utilizing this, and any other IEEE Standards document, should rely upon the advice of a competent professional in determining the exercise of reasonable care in any given circumstances.

Interpretations: Occasionally questions may arise regarding the meaning of portions of standards as they relate to specific applications. When the need for interpretations is brought to the attention of IEEE, the Institute will initiate action to prepare appropriate responses. Since IEEE Standards represent a consensus of concerned interests, it is important to ensure that any interpretation has also received the concurrence of a balance of interests. For this reason, IEEE and the members of its societies and Standards Coordinating Committees are not able to provide an instant response to interpretation requests except in those cases where the matter has previously received formal consideration.

Comments for revision of IEEE Standards are welcome from any interested party, regardless of membership affiliation with IEEE. Suggestions for changes in documents should be in the form of a proposed change of text, together with appropriate supporting comments. Comments on standards and requests for interpretations should be addressed to:

Secretary, IEEE-SA Standards Board
445 Hoes Lane
P.O. Box 1331
Piscataway, NJ 08855-1331
USA

Note: Attention is called to the possibility that implementation of this standard may require use of subject matter covered by patent rights. By publication of this standard, no position is taken with respect to the existence or validity of any patent rights in connection therewith. The IEEE shall not be responsible for identifying patents for which a license may be required by an IEEE standard or for conducting inquiries into the legal validity or scope of those patents that are brought to its attention.

IEEE is the sole entity that may authorize the use of certification marks, trademarks, or other designations to indicate compliance with the materials set forth herein.

Authorization to photocopy portions of any individual standard for internal or personal use is granted by the Institute of Electrical and Electronics Engineers, Inc., provided that the appropriate fee is paid to Copyright Clearance Center. To arrange for payment of licensing fee, please contact Copyright Clearance Center, Customer Service, 222 Rosewood Drive, Danvers, MA 01923 USA; (978) 750-8400. Permission to photocopy portions of any individual standard for educational classroom use can also be obtained through the Copyright Clearance Center.

Copyright The Institute of Electrical and Electronics Engineers, Inc.
Provided by IHS under license with IEEE
No reproduction or networking permitted without license from IHS
Not for Resale

Introduction

(This introduction is not a part of IEEE Std 628-2001, IEEE Standard Criteria for the Design, Installation, and Qualification of Raceway Systems for Class 1E Circuits for Nuclear Power Generating Stations.)

The original document was issued in 1987 and reaffirmed in 1992. During the process of reaffirmation, it was agreed to add earthquake experience data as an acceptable method of performing seismic qualification for raceway systems in this revision of the standard. This revision, therefore, incorporates methods developed by the Seismic Qualification Users Group (SQUG). An annex has been added to the document to assist the user with the new methodology. The applicability of this methodology is contingent on its acceptability per the plant licensing basis. It should be noted, however, that the SQUG methodology was approved by the US Nuclear Regulatory Commission (NRC) for verification of seismic adequacy of the cable tray systems at older nuclear power plants that were licensed prior to IEEE Std 344-1975. At this time, the use of experience-based methodology (SQUG) for the qualification of cable tray systems for the balance of nuclear power plants has not been approved by the NRC.

The working group would like to express its appreciation to the SQUG, the Advanced Reactor Corporation, and EQE International for their permission for the use of this material.

The other changes made to this standard were format changes and upgrading of the document references. The definitions contained in the original and reaffirmed documents have been removed as they are now contained in IEEE 100, *IEEE Authoritative Dictionary of IEEE Standards Terms*. Many of the references have been revised, while others have been superseded. In several cases, the reference list of bibliography contains different revisions of the same standard. In those cases, the latest revision is in use unless explicitly stated in the body of the standard.

The working group discussed the use of the term “Safety Class” in place of the term “Class 1E.” The working group felt that definition and usage of these terms were established in IEEE Std 308-1991, IEEE Standard Criteria for Class 1E Power Systems for Nuclear Power Generating Stations, and this standard should conform to the established criteria. Therefore, use of the term “Class 1E” has been maintained.

At the time this standard was completed, the working group had the following membership:

John P. Carter, *Chairman*

Paul Baughman	Frank Hettinger	Charles Miller
William Henries	Paul Johnson	Albert Wong

The following members of the balloting committee voted on this standard:

Satish K. Aggarwal	J. J. Disosway	John E. Merando Jr
Vincent P. Bacanskas	Surinder Dureja	Burt Nemroff
Michael P. Baldwin	Joseph R. Fragola	Gerald L. Nicely
Farouk D. Baxter	Luis C. Gonzalez	Barry J. Skoras
Wes W. Bowers	Britton P. Grim	Peter B. Stevens
Daniel F. Brosnan	Joe T. Hazeltine	James E. Stoner
Salvatore P. Carfagno	Gregory K. Henry	Peter Szabados
Robert C. Carruth	Paul R. Johnson	Raymond Weronick
John P. Carter	James T. Keiper	G. O. Wilkinson
John Chiloyan	John D. MacDonald	David J. Zaprazny
Raymond J. Christensen	John R. Matras	Mark S. Zar

Copyright © 2001 IEEE. All rights reserved.

Copyright The Institute of Electrical and Electronics Engineers, Inc.
Provided by IHS under license with IEEE
No reproduction or networking permitted without license from IHS
Not for Resale

The final conditions for approval of this standard were met on 5 January 2001. This standard was conditionally approved by the IEEE-SA Standards Board on 7 December 2000, with the following membership:

Donald N. Heirman, *Chair*
James T. Carlo, *Vice Chair*
Judith Gorman, *Secretary*

Satish K. Aggarwal	James H. Gurney	James W. Moore
Mark D. Bowman	Richard J. Holleman	Robert F. Munzner
Gary R. Engmann	Lowell G. Johnson	Ronald C. Petersen
Harold E. Epstein	Robert J. Kennelly	Gerald H. Peterson
H. Landis Floyd	Joseph L. Koepfinger*	John B. Posey
Jay Forster*	Peter H. Lips	Gary S. Robinson
Howard M. Frazier	L. Bruce McClung	Akio Tojo
Ruben D. Garzon	Daleep C. Mohla	Donald W. Zipse

*Member Emeritus

Also included is the following nonvoting IEEE-SA Standards Board liaison:

Alan Cookson, *NIST Representative*
Donald R. Volzka, *TAB Representative*

Catherine Berger
IEEE Standards Project Editor

National Electrical Code and NEC are both registered trademarks of the National Fire Protection Association, Inc.

Copyright © 2001 IEEE. All rights reserved.

Copyright The Institute of Electrical and Electronics Engineers, Inc.
Provided by IHS under license with IEEE
No reproduction or networking permitted without license from IHS
Not for Resale

Contents

1. Overview 1

1.1 Scope 1
1.2 Purpose 1

2. References 1

3. Abbreviations and acronyms 3

4. Design 4

4.1 General 4
4.2 Separation criteria 4
4.3 Grounding 4
4.4 Raceway identification 5
4.5 Raceway system protection 5
4.6 Environmental considerations 5
4.7 Materials 5
4.8 Metallic raceway system finishes 6
4.9 Raceway system requirements 7
4.10 Structural design criteria 10

5. Qualification methods 13

5.1 Analysis 13
5.2 Dynamic testing 13
5.3 Combined analysis and testing 13
5.4 Seismic-experience-based qualification 14
5.5 Acceptance criteria 14

6. Installation 14

6.1 Packaging, shipping, receiving, storage, and handling 14
6.2 Installation of raceway systems 14

7. Documentation 15

7.1 Design activities 15
7.2 Raceway system components 15
7.3 Construction activities 15
7.4 Document collection, storage, and maintenance 15

Annex A (informative) Bibliography 16

Annex B (informative) Additional design considerations for 4.9 and 4.10 17

Annex C (informative) Guidance for structural acceptance criteria for elastic design method 20

Annex D (normative) Criteria and guidance for seismic-experience-based qualification 22

Copyright © 2001 IEEE. All rights reserved.

Copyright The Institute of Electrical and Electronics Engineers, Inc.
Provided by IHS under license with IEEE
No reproduction or networking permitted without license from IHS
Not for Resale

IEEE Standard Criteria for the Design, Installation, and Qualification of Raceway Systems for Class 1E Circuits for Nuclear Power Generating Stations

1. Overview

1.1 Scope

This standard contains the requirements for the design, installation, and qualification of raceway systems for Class 1E circuits external to electric equipment and components for nuclear power generating stations. Because aging and radiation have no known detrimental effects upon metallic raceway systems and because nonmetallic raceway systems are limited to underground or embedded applications, aging and radiation are not considered in this standard. The embedments or structural members to which a support is attached are beyond the scope of this standard.

1.2 Purpose

The purpose of this standard is to provide criteria for the minimum requirements in the selection design, installation, and qualification of raceway systems for Class 1E circuits for nuclear power generating stations. It also prescribes methods for the structural qualification of raceway systems for Class 1E circuits.

2. References

This standard shall be used in conjunction with the following publications. When the following standards are superseded by an approved revision, the revision shall apply.

ACI 349-97, Code Requirements for Nuclear Safety Related Concrete Structures.[1]

[1]ACI publications are available from the American Concrete Institute, P.O. Box 9094, Farmington Hills, MI 48333, USA.

Copyright © 2001 IEEE. All rights reserved.

Copyright The Institute of Electrical and Electronics Engineers, Inc.
Provided by IHS under license with IEEE
No reproduction or networking permitted without license from IHS
Not for Resale

ANSI C80.1-1995, American National Standard Specification for Rigid Steel Conduit—Zinc Coated.[2]

ANSI C80.3-1995, American National Standard Specification for Electrical Metallic Tubing—Zinc Coated.

ANSI C80.5-1995, American National Standard Specification for Rigid Aluminum Conduit (ARC).

ASME 1995 Boiler and Pressure Vessel Code, Section IX.[3]

ASME NQA-1-1997, Quality Assurance Program Requirements for Nuclear Facilities.

ASTM A 123-89, Standard Specification for Zinc (Hot-Dip Galvanized) Coatings on Iron and Steel Products.[4]

ASTM A 653/A 653M-99, Standard Specification for Sheet Steel, Zinc-Coated (Galvanized) or Zinc-Iron Alloy-Coated (Galvannealed) by the Hot-Dip Process.

ASTM B 633-98, Standard Specification for Electrodeposited Coatings on Zinc on Iron and Steel.

ASTM B 776-86, Standard Specification for Electro-Deposited Coatings of Cadmium.

AWS D1.1-00, Structural Welding Code—Steel.[5]

AWS D1.3-98, Structural Welding Code—Sheet Steel.

IEEE Std 344-1987 (Reaff 1993), IEEE Recommended Practice for Seismic Qualification of Class 1E Equipment for Nuclear Power Generating Stations.[6]

IEEE Std 384-1992 (Reaff 1998), IEEE Standard Criteria for Independence of Class 1E Equipment and Circuits.

IEEE Std 665-1995, IEEE Guide for Generating Station Grounding.

IEEE Std 690-1984 (Reaff 1996), IEEE Standard for the Design and Installation of Cable Systems for Class 1E Circuits in Nuclear Power Generating Stations.

NEMA FB 1-1993, Fittings, Cast Metal Boxes, and Conduit Bodies for Conduit and Cable Assemblies.[7]

NEMA TC 2-1998, Electrical Polyvinyl Chloride (PVC) Tubing and Conduit.

NEMA TC 3-1999, PVC Fittings for Use with Rigid PVC Conduit and Tubing.

NEMA TC 6-1990, PVC and ABS Plastic Utilities Duct for Underground Installation.

NEMA TC 8-1990, Extra-Strength PVC Plastic Utilities Duct for Underground Installation.

NEMA TC 9-1999, Fittings for PVC Plastic Utility Duct for Underground Installation.

---

[2]ANSI publications are available from the Sales Department, American National Standards Institute, 11 West 42nd Street, 13th Floor, New York, NY 10036, USA (http://www.ansi.org/).

[3]ASME publications are available from the American Society of Mechanical Engineers, 3 Park Avenue, New York, NY 10016-5990, USA (http://www.asme.org/).

[4]ASTM publications are available from the American Society for Testing and Materials, 100 Barr Harbor Drive, West Conshohocken, PA 19428-2959, USA (http://www.astm.org/).

[5]AWS publications are available from the American Welding Society, 550 N.W. Le Jeune Road, Miami, FL 33126, USA (http://www.amweld.org/).

[6]IEEE publications are available from the Institute of Electrical and Electronics Engineers, 445 Hoes Lane, P.O. Box 1331, Piscataway, NJ 08855-1331, USA (http://standards.ieee.org/).

[7]NEMA publications are available from Global Engineering Documents, 15 Inverness Way East, Englewood, Colorado 80112, USA (http://global.ihs.com/).

Copyright © 2001 IEEE. All rights reserved.

Copyright The Institute of Electrical and Electronics Engineers, Inc.
Provided by IHS under license with IEEE
No reproduction or networking permitted without license from IHS
Not for Resale

NEMA VE 1-1998, Metallic Cable Tray Systems.

NFPA 70-1999, National Electrical Code® (NEC®).[8]

UL 1-2000, Flexible Metal Conduit.[9]

UL 6-2000, Electrical Rigid Metal Conduit—Steel.

UL 514A-1996, Metallic Outlet Boxes.

UL 514B-1997, Fittings for Conduit and Outlet Boxes.

UL 514C-1996, Non-Metallic Outlet Boxes, Flush-Device Boxes, and Covers.

UL 797-2000, Electric Metallic Tubing—Steel.

UL 1242-2000, Intermediate Metal Conduit—Steel.

3. Abbreviations and acronyms

ABS	acrytonitrile butadiene styrene
ACI	American Concrete Institute
AISC	American Institute of Steel Construction
AISI	American Iron and Steel Institute
AWS	American Welding Society
BWR	boiling water reactor
DL	dead load
EMT	electrical metallic tubing
EPRI	Electric Power Research Institute
HVAC	heating, ventilation, and air conditioning
IMC	intermediate metal conduit
LL	live load
NFPA	National Fire Protection Association
OBE	operating basis earthquake
PE	polyethylene
PVC	polyvinyl chloride
RAC	rigid aluminum conduit
RMC	rigid metal conduit
RSC	rigid steel conduit
RS	response spectrum or spectra
SRSS	square root of the sum of the squares
SRV	safety relief valve
SSE	safe shutdown earthquake
T	thermal load
UL	Underwriters Laboratories
ZPA_h	horizontal zero period acceleration

[8]The NEC is published by the National Fire Protection Association, Batterymarch Park, Quincy, MA 02269, USA (http://www.nfpa.org/). Copies are also available from the Institute of Electrical and Electronics Engineers, 445 Hoes Lane, P.O. Box 1331, Piscataway, NJ 08855-1331, USA (http://standards.ieee.org/).

[9]UL standards are available from Global Engineering Documents, 15 Inverness Way East, Englewood, Colorado 80112, USA (http://global.ihs.com/).

Copyright © 2001 IEEE. All rights reserved.

Copyright The Institute of Electrical and Electronics Engineers, Inc.
Provided by IHS under license with IEEE
No reproduction or networking permitted without license from IHS Not for Resale

4. Design

4.1 General

Raceway systems for Class 1E circuits are not Class 1E; however, they shall be designed to seismic Category 1 requirements to prevent failure during a seismic event. Documentation requirements for the raceway system shall be in accordance with Clause 7 of this standard.

The raceway system shall be designed to perform its functions and shall not damage adjacent safety-related systems below an acceptable level during and after experiencing all conditions postulated to occur in its environment. As a minimum, the design shall adhere to the basic requirements of this standard and IEEE Std 384-1992.[10]

In the design and installation of raceway systems, consideration shall be given to the relative structural integrity of aluminum versus steel when subjected to heat from postulated fires.

Clearances with respect to other systems shall be established and provided to ensure that movement due to loads and load combinations (see 4.10.1) will not affect the integrity of the raceway system.

Raceways shall not be located close to heat sources unless cables are selected or derated for the highest expected ambient temperature. Longitudinal expansion of raceways shall be considered in areas with varying temperatures.

Relative displacement of the raceway system to other systems, equipment, or structures shall be considered in the design of raceway systems. The raceway supports shall be designed to accommodate differential settlement and deflections between structures.

The design of raceways shall accommodate the installation of qualified fire stops where raceways penetrate a fire barrier. For additional fire considerations, see IEEE Std 690-1984.

NOTE—Flexible conduit may not accommodate relative displacement in all installations.

For additional guidelines pertaining to raceway systems, see Annex B.

4.2 Separation criteria

4.2.1 Design requirements

The design requirements for physical independence and separation of raceways containing Class 1E circuits are contained in IEEE Std 384-1992.

4.2.2 Raceways

Raceways shall be separated according to the voltage classification of the cables contained within them. See IEEE Std 690-1984.

4.3 Grounding

Metallic raceways shall be electrically continuous and electrically connected to the station ground grid in accordance with IEEE Std 665-1995.

[10]Information on references can be found in Clause 2.

Copyright © 2001 IEEE. All rights reserved.

Copyright The Institute of Electrical and Electronics Engineers, Inc.
Provided by IHS under license with IEEE
No reproduction or networking permitted without license from IHS
Not for Resale

4.4 Raceway identification

Raceways shall be marked in accordance with the requirements of IEEE Std 384-1992; embedded conduit shall be marked at all access points.

4.5 Raceway system protection

Raceway systems in hazardous areas shall be designed in accordance with IEEE Std 384-1992.

4.6 Environmental considerations

The selection of materials used for raceway systems and the finishes required shall be based on the environmental conditions expected where the raceway systems are installed.

To meet the requirements for combustible gas control, materials for raceway systems to be installed in containment shall be selected with due consideration to minimizing the generation of hydrogen gas following a design basis event.

4.7 Materials

Physical properties of materials used for raceway systems shall meet or exceed the minimum requirements established for the design and qualification of these systems. Conduits shall meet the minimum requirements in 4.7.1 and 4.7.2; cable trays shall meet the minimum requirements of 4.7.3.

4.7.1 Metallic conduit

4.7.1.1 Rigid steel conduit (RSC)

RSC shall meet the requirements of ANSI C80.1-1995 and UL 6-2000.

4.7.1.2 Rigid aluminum conduit (RAC)

RAC shall meet the requirements of ANSI C80.5-1995.

4.7.1.3 Intermediate metal conduit (IMC)

IMC shall meet the requirements of UL 1242-2000.

4.7.1.4 Electrical metallic tubing (EMT)

EMT shall meet the requirements of ANSI C80.3-1995 and UL 797-2000.

4.7.1.5 Flexible metal conduit

Flexible metal conduit shall meet the requirements of UL 1-2000.

4.7.1.6 Fittings and accessories

Conduit fittings and accessories shall meet the requirements of NEMA FB 1-1993, UL 514A-1996, UL 514B-1988, and UL 514C-1988.

Copyright © 2001 IEEE. All rights reserved.

Copyright The Institute of Electrical and Electronics Engineers, Inc.
Provided by IHS under license with IEEE
No reproduction or networking permitted without license from IHS Not for Resale

4.7.2 Nonmetallic conduit

4.7.2.1 Polyvinyl chloride (PVC) conduit

PVC conduit shall meet the requirements of NEMA TC 2-1998, NEMA TC 6-1990, or NEMA TC 8-1990.

4.7.2.2 Polyethylene (PE) conduit

PE conduit shall meet the requirements of NEMA TC 2-1998.

4.7.2.3 Acroylonitrile butadiene strene (ABS) conduit

ABS conduit shall meet the requirements of NEMA TC 6-1990.

4.7.2.4 PVC conduit fittings

PVC conduit fittings shall meet the requirements of NEMA TC 3-1999 and NEMA TC 9-1999.

4.7.2.5 ABS conduit fittings

ABS conduit fittings shall meet the requirements of NEMA TC 9-1999.

4.7.3 Cable trays, accessories, and fittings

Cable trays, accessories, and fittings shall meet the requirements of NEMA VE 1-1998.

4.8 Metallic raceway system finishes

Metallic raceway systems manufactured from steel oxidize when exposed to air. This oxidation process could ultimately cause failure. To minimize this possibility, a finish (such as galvanizing or plating) shall be applied to the surface of raceway systems in accordance with 4.8.1.1 and 4.8.1.2, respectively. See 4.6 for additional coating requirements that may be needed due to the environmental conditions in the area of installation.

4.8.1 Manufacturer-applied finishes

4.8.1.1 Galvanizing

When a galvanized finish is specified, one of the following standards shall be invoked:

— Prior to fabrication: ASTM A 653/A 653M-99, Coating Class B90
— After fabrication: ASTM A 123-89

4.8.1.2 Plating

When a plated finish is specified, one of the following standards shall be invoked:

— Zinc plating: ASTM B 633-98, Coating Class FE/ZN5
— Cadmium plating: ASTM B 776-86, Coating Class TS

4.8.2 Field-applied finishes

Field-applied finishes shall be compatible with the finishes applied during the manufacturing process.

Copyright © 2001 IEEE. All rights reserved.

Copyright The Institute of Electrical and Electronics Engineers, Inc.
Provided by IHS under license with IEEE
No reproduction or networking permitted without license from IHS
Not for Resale

4.9 Raceway system requirements

Raceways entering enclosures from the top or sides shall be designed to minimize the entrance of condensation or water and to prevent the accumulation of moisture within the equipment. The necessity for equipment drains or conduit seals shall be predicated upon the required environmental parameters of the equipment contained in the enclosure. See IEEE Std 690-1984 for raceway fill requirements. Raceways shall not be connected to electrical equipment unless accounted for in the design.

4.9.1 Conduit system requirements

4.9.1.1 Design

Conduit systems shall be designed and arranged with suitable pull points (such as boxes and manholes) and bend radii so that the allowable cable pulling tensions and side-wall pressures recommended by cable manufacturers or determined by calculation are not exceeded. See IEEE Std 690-1984.

4.9.1.2 Sizing

Conduit shall be sized to avoid critical jamming ratio diameters. See IEEE Std 690-1984.

4.9.1.3 Seismic loading

Unless justification is otherwise provided, rigid metal conduit (RMC) or IMC shall be used in exposed conduit systems designed for seismic loading.

4.9.1.4 Compliance

Where compliance is required by local, state, or federal laws, National Electrical Code® (NEC®) (NFPA 70-1999) shall be used in selecting conduit types for use in hazardous locations.

4.9.1.5 Flexible metal conduit

The length and installed configuration of flexible metal conduit shall be designed to provide for dynamic and thermal movement and to accommodate the largest minimum bending radius of the cables to be installed. The length of flexible metal conduit shall be accounted for in the design and qualification of the conduit system. Flexible entry shall be used for conduit entering Class 1E equipment where relative movement between the conduit and the equipment is anticipated.

4.9.1.6 Welding of conduits

Welding of conduits shall not be permitted.

4.9.1.7 Metallic conduit system

The entire metallic conduit system, whether embedded or exposed, shall be electrically continuous and grounded in accordance with IEEE Std 665-1995. Where used as the equipment grounding conductor, flexible conduit and associated fittings shall be suitable for the anticipated ground fault current; or they shall be paralleled with a ground cable of suitable size.

4.9.1.8 Embedded conduit

Embedded conduit may be either metallic or nonmetallic. When embedded in building walls or floors, it shall meet the requirements of ACI 349-97, unless justification is otherwise provided. Embedded conduit subject to flooding shall slope to either boxes, handholes, or manholes for drainage or be sealed to exclude

Copyright © 2001 IEEE. All rights reserved.

Copyright The Institute of Electrical and Electronics Engineers, Inc.
Provided by IHS under license with IEEE
No reproduction or networking permitted without license from IHS Not for Resale

the entry of water. Where embedded conduit crosses a seismic, vibration, or expansion/contraction joint, a piece of flexible conduit or suitable fitting shall be installed to allow relative movement of the structures without damaging the conduit.

4.9.1.9 Embedded conduit protection

Protection shall be provided for embedded conduit at floor levels and other locations where physical damage to cables is likely.

4.9.2 Cable tray system requirements

4.9.2.1 Cable tray design

Cable trays shall be designed to carry their design dead load (DL) (see 4.10.1.1.1) and a minimum concentrated load of 90.72 kg (200 lb) at midspan at the centerline of the tray or on either side rail. Under this condition, the tray shall neither fail nor be permanently distorted.

4.9.2.2 Cable tray protection

Protection shall be provided on exposed vertical tray risers at floor levels and other locations where physical damage to cables is likely.

4.9.2.3 Cable tray utilization

Cable trays shall not be utilized to carry ducts, piping, instrument tubing, or other equipment unless it can be demonstrated that the Class 1E functions of the cables will not be degraded below an acceptable level.

4.9.2.4 Grounding

Cable tray systems shall be electrically continuous and solidly grounded. Where the tray is not capable of serving as an adequate ground return path, a ground conductor of suitable size shall be attached to and run parallel with the tray.

4.9.2.5 Flexible connectors

Unless accounted for in the design, conduits shall not be connected to trays. Where continuity of metallic shielding or protection of conductors is required, a flexible connection shall be used to accommodate horizontal and vertical movement caused by a dynamic load.

4.9.3 Wireway system requirements

4.9.3.1 Extent of permission

Wireways shall be permitted only for exposed work. Wireways shall not be installed in any hazardous location or where subjected to severe physical damage or corrosive vapor.

4.9.3.2 Supports

Wireways shall be securely attached to the supports. Adjoining wireway sections shall be securely fastened together to provide a rigid joint. Vertical runs shall have no more than one joint between supports.

4.9.3.3 Pass-through

Wireways shall be permitted to pass through walls and floors if the pass-through is in unbroken lengths.

Copyright © 2001 IEEE. All rights reserved.
Copyright The Institute of Electrical and Electronics Engineers, Inc.
Provided by IHS under license with IEEE
No reproduction or networking permitted without license from IHS
Not for Resale

4.9.3.4 Extension

Extension from wireways shall be made with rigid or flexible metal conduit, intermediate metal conduit, or trays, where compliance with NEC is required by local, state, or federal laws. DLs of wireways shall be closed.

4.9.3.5 Grounding

Wireways shall be electrically continuous and solidly grounded. Where the wireway is not capable of serving as an adequate ground return path, a ground conductor of suitable size shall be attached to and run parallel with the wireway.

4.9.4 Underground duct system requirements

4.9.4.1 Duct banks

Duct banks entering buildings, manholes, or handholes shall allow for relative displacement between the structure and the duct bank.

4.9.4.2 Duct bank protection

Protection shall be provided on exposed duct banks at floor levels and other locations where physical damage to cables is likely.

4.9.4.3 Sloping

The duct bank shall be sloped to drainage points, manholes, or handholes. All encased duct joints shall be concrete-tight.

4.9.4.4 Duct length and configuration

The duct bank length and configuration between pull points (such as manholes or handholes) shall not cause cable side-wall pressures, cable bending radii, and cable pulling tensions that exceed specified requirements (see IEEE Std 690-1984). Cable pull points shall have openings sufficiently sized to accommodate the cable's minimum bending radius during installation.

4.9.4.5 Duct spacing

The spacing of ducts shall be based on thermal considerations (such as cable $I^2 R$ losses or circulating currents) and to ensure adequate concrete encasement. Duct spacer materials shall be compatible with the duct material. The duct spacer type and longitudinal spacing shall be chosen to prevent excessive deflection, shall not deform the duct wall, and shall be staggered to avoid shear planes. The bottom spacer shall provide sufficient clearance from the trench floor to permit the specified concrete layer thickness. Wood shall not be used for duct spacers.

4.9.4.6 Metallic ducts

Metallic ducts shall be electrically continuous throughout and grounded at each access point.

4.9.4.7 Ground wire

A ground wire of suitable size shall be run along with nonmetallic duct banks. It shall enter every manhole and handhole. The ground wire shall be connected to the station ground system at each end of the duct banks.

Copyright © 2001 IEEE. All rights reserved.

Copyright The Institute of Electrical and Electronics Engineers, Inc.
Provided by IHS under license with IEEE
No reproduction or networking permitted without license from IHS Not for Resale

4.9.4.8 Damage

To avoid damage due to circulating currents, nonmetallic ducts in a bank shall not be looped by ferrous materials (such as rebar or iron mesh) unless the ferrous materials are far enough away to minimize inductive heating.

4.9.4.9 Underground raceway identification

Underground raceways shall be marked with the duct identification and safety division designations at each access point. Duct banks external to structures shall be marked with surface and subsurface location markings.

4.9.4.10 Duct bank encasement

The duct bank encasement shall consist of materials such as sand or reinforced concrete, depending upon the seismic conditions at the site.

4.9.4.11 Reinforced concrete encasement

Duct banks, manholes, and handholes encased in reinforced concrete shall have concrete adequately reinforced so they will be able to withstand the design loads and remain functional.

4.9.4.12 Sand-encased duct banks

If sand-encased duct banks are used, adequate compaction of sand shall be provided for uniform support of the ducts.

4.9.4.13 Duct bank protection

Duct banks shall be protected from tornado-generated missiles or turbine missiles by adequate earth cover and other similar means. Manholes and handholes shall be afforded equivalent protection.

4.9.4.14 Buried conduits

Directly buried conduits shall not be installed under roadways or in areas where heavy equipment may be moved over them unless adequately protected.

4.9.4.15 Design

The design of reinforced concrete structures for underground duct, manholes, and handholes shall be according to ACI 349-97.

4.9.5 Combination support requirements

Where supports carry more than one type of raceway, a mechanical system, or both, the load combination shall be considered in the design. The combination support shall be designed as seismic Category I and shall meet the requirements of this standard.

4.10 Structural design criteria

4.10.1 Loads and load combinations

The loads identified in 4.10.1.1 shall be considered in the design of raceway systems and underground duct banks.

--`,,`-`-`,,`,,`,`,,`---
Copyright © 2001 IEEE. All rights reserved.
Copyright The Institute of Electrical and Electronics Engineers, Inc.
Provided by IHS under license with IEEE
No reproduction or networking permitted without license from IHS
Not for Resale

4.10.1.1 Loads

4.10.1.1.1 Dead loads (DLs)

The DL shall consist of the weight of the raceway system, cables, fireproofing materials, and other permanently attached loads. The weight of cable shall be based on the maximum allowable raceway fill. For underground duct banks, the DL shall include the soil pressure and any hydrostatic water pressure.

4.10.1.1.2 Live loads (LLs)

The LL shall consist of the static loads supported by the raceway system that are temporary in nature. These loads, when applicable, shall consist of, but not be limited to, concentrated loads due to installation or maintenance (see 4.9.4.1). Where applicable, vehicular traffic, railroads, and other surface loads shall be included as LLs for underground duct banks.

4.10.1.1.3 Thermal loads (T)

Where thermal loads are to be included, they shall consist of the most critical transient or steady-state condition for the load combination under consideration. In most applications, thermal loads are not a consideration.

4.10.1.1.4 Safety relief valve (SRV) loads

The SRV load is a dynamic load other than seismic that is specified at the system anchorage by response spectra (RS) or time history motions. This load is applicable only to boiling water reactor (BWR) plants. Other dynamic effects (such as chugging, pool swell, and condensation oscillation leads) shall be included along with SRV load effects as appropriate for the postulated accident condition.

4.10.1.1.5 Operating basis earthquake (OBE) loads

An OBE load is a seismic load imposed on raceway systems generated by the OBE. The seismic loads from the three principal directions shall be determined for this condition. For underground duct banks, earthquake loads shall include the effects of seismic waves, such as shear and compressive waves, dynamic soil pressure, and inertia loads.

4.10.1.1.6 Safe shutdown earthquake (SSE) loads

An SSE load is a seismic load imposed on raceway systems generated by the SSE. The seismic loads from the three principal directions shall be determined for this condition. For underground duct banks, earthquake loads shall include the effects of seismic waves, such as shear and compressive waves, dynamic soil pressure, and inertia loads.

4.10.1.2 Load combinations

The raceway and underground duct system shall be designed to withstand the effects of the load combinations in Table 1. If applicable, missile loads shall be included in the extreme environmental load combination for underground duct banks. An OBE response analysis and design are not required if the OBE is one-third or less of the SSE. An OBE response analysis is required if the OBE is greater than one-third of the SSE.

4.10.1.3 Abnormal loads

For raceways internal to the station, abnormal loads are those generated by a postulated high-energy pipe break accident, accident pressure loads, jet impingement loads, pipe whip missile loads, and equipment missiles. For external raceways, abnormal loads would be an externally generated missile. Generally, these loads

Copyright © 2001 IEEE. All rights reserved.

Copyright The Institute of Electrical and Electronics Engineers, Inc.
Provided by IHS under license with IEEE
No reproduction or networking permitted without license from IHS
Not for Resale

Table 1—Load combinations

Normal	DL + T + LL DL + T + SRV
Severe environmental	DL + T + SRV + OBE
Extreme environmental	DL + T + SRV + SSE

have a high magnitude and are localized. It is not practical to consider these loads in the structural analysis of the raceway system. See IEEE Std 384-1992 for the design considerations associated with abnormal loads.

4.10.2 Structural acceptance criteria

The acceptance criteria shall be developed for the raceway system. The criteria should be obtained from industry experience, applicable codes and standards, manufacturing standards, or the ultimate load values from the test data. Annex C contains additional guidance with respect to the use of the elastic design method. Annex D contains additional guidance with respect to the use of seismic-experience-based acceptance criteria.

4.10.2.1 Displacement limits

Movement of the raceway system may occur due to design considerations, such as thermal expansion or a seismic event. Displacement limits shall be imposed on raceway systems so that all required clearances are maintained and cables remain intact to prevent loss of circuit continuity.

4.10.2.2 Testing

Where cable tray and wireway characteristics, such as section properties and deflections, cannot be acceptably determined by analysis, a test shall be performed to determine these parameters.

4.10.3 Structural analysis

The structural analysis shall be performed for the loads specified in 4.10.1.1. Two analytical methods for calculating the effects of dynamic loads on raceway systems are commonly used: dynamic analysis and equivalent static-load analysis. The selection of the analysis method shall take into account the complexity of the system and the adequacy of the analytical technique to properly predict the response of the system while under dynamic excitation and other dynamic loads (see 4.10.1).

As an alternative to rigorous analysis of seismic loads, the seismic-experience-based qualification method contained in Annex D may be used. This method, which is based on the evaluation of documented performance of raceway systems in past earthquakes and tests, as well as analytical considerations, is considered adequate to assure acceptable performance of the raceway system.

4.10.3.1 Dynamic analysis

Dynamic analysis of a raceway system shall be performed by using the mathematical model of the raceway system that best represents the mass distribution and stiffness of the various system components. RS applicable to the raceway system location shall be utilized to define the dynamic loads. The RS is selected for the damping values defined in 4.10.3.3.

The spectral accelerations for each mode shall be obtained for each component of the earthquake from the appropriate RS. The representative maximum design values of the individual modal responses of interest in

Copyright © 2001 IEEE. All rights reserved.

Copyright The Institute of Electrical and Electronics Engineers, Inc.
Provided by IHS under license with IEEE
No reproduction or networking permitted without license from IHS
Not for Resale

design shall be combined in accordance with the requirements of IEEE Std 344-1987; or other methods may be used, provided they are justified. The responses obtained for each of three orthogonal directions shall be combined by the square-root-of-the-sum-of-the-squares (SRSS) technique. The resulting seismic responses shall be combined with respective responses due to other loads according to the load combinations specified in 4.10.1.2.

4.10.3.2 Static-load analysis

Equivalent static-load analysis shall be performed as required to obtain the responses due to dynamic loads. The mass of the system multiplied by an appropriate factor (see IEEE Std 344-1987) times the peak response value of the applicable RS curve at an appropriate damping value shall be used to obtain the dynamic load. The effects of simultaneous application of these components of motion, from the three separate analyses in each orthogonal direction, shall be combined by the SRSS technique. The representative maximum value of a particular response for designs such as deformations or stresses may then be calculated and combined with the response to other loads as per the load combinations specified in 4.10.1.2.[11]

4.10.3.3 Damping

Damping values for each raceway system shall be established and justified.

5. Qualification methods

Qualification of the raceway system shall be performed by analysis, test, seismic similarity screening, or a combination of these methods.

5.1 Analysis

Analytical procedures as described in 4.10.3.1 and 4.10.3.2 may be used for qualification of raceway systems.

Analytical results from the loads and load combination in 4.10.1 shall be evaluated for system parameters such as mechanical strength and alignment. Maximum displacement under all loading shall be computed, and interference and interaction effects determined. The magnitude of the essential parameters shall be less than the established acceptable limits.

5.2 Dynamic testing

When utilized to demonstrate the design adequacy for dynamic loads, dynamic testing shall be performed in accordance with IEEE Std 344-1987.

5.3 Combined analysis and testing

When required, the raceway system shall be qualified by a combined method of analysis and testing. The mode shapes and resonant frequencies of a typical raceway system shall be determined from testing and shall be used to verify the adequacy of the mathematical model.

[11]At this time, no standard method has been recognized for combining the responses due to SRV loads. When an accepted method is developed, it will be incorporated into this document.

Copyright © 2001 IEEE. All rights reserved.

Copyright The Institute of Electrical and Electronics Engineers, Inc.
Provided by IHS under license with IEEE
No reproduction or networking permitted without license from IHS Not for Resale

5.4 Seismic-experience-based qualification

The seismic-experience-based qualification procedure in Annex D is based upon the evaluation of documented performance of raceway systems in past earthquakes and tests as well as conventional analytical considerations. Two methodologies are given. The first is a design-by-rule method for use when new raceways and supports are to be installed (see D.1). The second is a screening procedure to be used when cables are added to existing raceways or when new raceways are to be added to existing supports (see D.2).

5.5 Acceptance criteria

The acceptance criteria for raceway system qualification shall be developed in the same manner as for structural acceptance criteria (see 4.10.2). Acceptance criteria for seismic-experience-based qualification is provided in Annex D.

6. Installation

6.1 Packaging, shipping, receiving, storage, and handling

Materials for raceway systems shall be packaged, shipped, received, stored, and handled in accordance with ASME NQA-1-1997 and classified to Level D.

6.2 Installation of raceway systems

6.2.1 Supports

The raceway system shall be erected as shown on design drawings. Attaching supports at the anchorage shall be accomplished by welding, bolting, stud welding, or concrete expansion anchors. Misalignment of successive supports shall be limited so that the effects of resulting spring loads when combined with other applicable load effects will not exceed the design allowables.

6.2.2 Anchorage locations

Anchorage locations shown on design documents shall be provided with installation tolerances. These tolerances shall not compromise raceway separation requirements of IEEE Std 384-1992 or affect the integrity of the seismic Category I structure.

6.2.3 Conduit attachments

Conduit attachments fastened to supports shall be provided with tolerances that do not compromise separation requirements set forth in IEEE Std 384-1992.

6.2.4 Installation requirements for fasteners

Installation requirements for fasteners (such as for welding studs, channel struts, support steel, and conduit clamps) shall include tolerances.

6.2.5 Preventing piping or duct failures

To prevent piping or duct failures or displacements from impairing the operation of essential systems or components, separation requirements for installation of raceway systems shall be coordinated with the

Copyright © 2001 IEEE. All rights reserved.

Copyright The Institute of Electrical and Electronics Engineers, Inc.
Provided by IHS under license with IEEE
No reproduction or networking permitted without license from IHS
Not for Resale

installation of high-energy piping; moderate-energy piping; and heating, ventilation, and air conditioning (HVAC) ducts.

6.2.6 Welding

Welding performed in the installation of raceway systems shall be in accordance with AWS D1.1-00, AWS D1.3-98, or ASME 1995 Boiler and Pressure Vessel Code (Section IX), as applicable. Welds shall be inspected before applying any postweld coating.

6.2.7 Painting

When a prime coat of paint is required to coat bare raceway support members installed inside the reactor containment, the steel preparation and coating shall conform to the reactor containment's unique coating requirements.

6.2.8 Embedded conduit, joints, and fittings

Embedded conduit, joints, and fittings shall be made concrete-tight and shall be sufficiently restrained within the formwork to prevent movement of the conduit due to buoyancy and other forces during concrete placement. When EMT is used, compression couplings should be utilized.

6.2.9 Burrs or sharp edges

After installation of a raceway system, burrs or sharp edges that could damage cables shall be removed prior to cable installation. See IEEE Std 690-1984.

7. Documentation

This clause contains the minimum documentation requirements for raceway systems.

7.1 Design activities

Activities used in the design of raceway systems (such as design drawings, calculations, analyses, and test data) shall be documented in accordance with ASME NQA1-1997.

7.2 Raceway system components

Adequate documentation, such as certificates of compliance, shall be maintained to indicate that the material being procured meets the specified requirements.

7.3 Construction activities

Installation and inspection activities shall be documented to furnish evidence that the installed raceway system meets design requirements.

7.4 Document collection, storage, and maintenance

The collection, storage, and maintenance of documents shall meet the requirements of ASME NQA-1-1997.

Copyright © 2001 IEEE. All rights reserved.

Copyright The Institute of Electrical and Electronics Engineers, Inc.
Provided by IHS under license with IEEE
No reproduction or networking permitted without license from IHS Not for Resale

Annex A

(informative)

Bibliography

[B1] IEEE Std 634-1978, IEEE Standard Cable Penetration Fire Stop Qualification Test.

[B2] AISC Manual of Steel Construction-1989, 9th Edition, American Institute of Steel Construction.

[B3] AISI Cold-Formed Steel Design Manual-1996, American Iron and Steel Institute.

[B4] Generic Implementation Procedure (GIP) for Seismic Verification of Nuclear Plant Equipment, Seismic Qualification Users Group, Revision 2, February, 1992, EPRI.[12]

[B5] IEEE 100, *The Authoritative Dictionary of IEEE Standards Terms,* Seventh Edition.

[12]The GIP is available in the US Government Public Document Room. It is also available from the Electric Power Research Institute for members or for a fee from nonmembers.

Copyright © 2001 IEEE. All rights reserved.

Copyright The Institute of Electrical and Electronics Engineers, Inc.
Provided by IHS under license with IEEE
No reproduction or networking permitted without license from IHS Not for Resale

Annex B

(informative)

Additional design considerations for 4.9 and 4.10

B.1 Raceway systems

Aluminum can react with certain chemical sprays used in some containment structures and release hydrogen, which may accumulate in explosive concentrations. The amount of aluminum raceways inside these containment structures is considered an inventoried item for review. Galvanized raceways are recommended inside containment structures; however, the amount of zinc used inside the containment structure is also considered an inventoried item for review.

B.1.1 Conduit and underground duct systems

B.1.1.1 Conduit application recommendations

a) Zinc-coated RMC and IMC may be exposed in wet and dry locations, embedded in noncinder concrete at least 5.08 cm (2 in) thick, and directly buried in soil. When used in cinder fills, it should be protected by noncinder concrete at least 5.08 cm thick. Where alkaline conditions exist, consideration should be given to a protective coating. Copper-silicon alloy, brass, or plastic plugs should be used to plug spare conduits in wet locations.

b) Aluminum RMC may be exposed in wet and dry locations. Because aluminum conduit may corrode in concrete, it should not be used without an external protective coating. It should not be installed in soil.

c) The top of duct banks should be located below the frost line. Duct banks should run as straight as possible with manholes and handholes used to minimize the number of bends. Bends should have the largest radius possible consistent with the duct configuration and material. Offsets in duct runs should be avoided. Manholes and handholes should have a sump to facilitate the use of a pump when required. Duct joints should be staggered both horizontally and vertically.

d) Hot-dip galvanized RMC should be used for installing low-level signal cables in the isolated cases where a concrete-encased duct bank contains conduits for power and low-level signal cables and additional electromagnetic shielding is required.

B.1.1.2 Conduit installation recommendations

a) In wet areas, RMC and IMC joints and connections should be made thoroughly watertight and rustresistant by applying a thread compound that will not insulate the joint. To prevent raceway obstruction, the compound should be applied only to the male conduit threads.

b) Where water or liquids can enter conduits, sloping of conduit runs and drainage of points should be considered.

c) Running threads should not be utilized.

d) Field bends should comply with Article 346-10 of NEC.

e) Conduit installed in or through concrete should have ends plugged before the concrete is poured. All conduits should be swabbed immediately after concrete placement. All joints should be concrete-tight.

Copyright © 2001 IEEE. All rights reserved.

Copyright The Institute of Electrical and Electronics Engineers, Inc.
Provided by IHS under license with IEEE
No reproduction or networking permitted without license from IHS Not for Resale

f) Field cuts and threads on galvanized steel conduit should be coated with a zinc-base corrosion inhibitor. Conduit end interiors should be clean and free of burrs.

g) Conduits should be marked sufficiently to provide easy identification.

h) Concrete curbs or other means of protection should be provided where nonmetallic conduit turns up out of floor slabs.

i) The bottom of the trench for directly buried conduits should be reasonably flat and free of stones. A layer of stone-free soil or sand should be placed in the trench to support the first row of conduits. The duct-bank formation may be built up layer by layer using a selected backfill between layers. The backfill should be free of stones and corrosive chemicals and be as homogeneous as possible. Tamping on the backfill should be on the sides and never on top of the conduits.

j) At elevated temperatures, nonmetallic (plastic) conduit will expand, causing possible loosening of joints and other problems related to restraining the conduit in a trench; consequently, during the summer months, consideration should be given to backfilling during the early morning or late evening hours or on a cloudy day. The integrity of the joints should be carefully checked before backfilling and the conduit should be swabbed immediately after backfilling.

k) When EMT is used, compression couplings should be utilized.

B.1.2 Cable tray systems—installation recommendations

a) Minimum vertical spacing between cable trays in a tier should be 30.48 cm measured from the bottom of the upper tray to the top of the lower tray. A minimum of 22.86 cm clearance is recommended between the top of a tray and beams, piping, and other structures to facilitate cable installation.

b) Normal rung spacing of ladder-type trays should be maintained at the centerline of the horizontal elbows.

c) Cable tray covers should be used to protect cables from falling objects, debris, or liquids; and the system design should prevent the accumulation of such contamination. Ventilation requirements should be considered to minimize the cable derating.

d) Field cuts to galvanized cable trays should be coated with a zinc-base corrosion inhibitor.

B.2 Structural design considerations

B.2.1 Testing

By subjecting a cable tray to a static loading in incremental steps and measuring deflection at given locations, a load-deflection curve can be plotted. If the load is increased until failure of the tray, the maximum load-carrying ability can be obtained. These data can then be used to calculate section properties, which can then be used in the static or dynamic analysis of the cable tray. Similarly, raceway support properties can be demonstrated by static-load tests.

B.2.2 Equivalent static-load analysis

A multiplying factor of 1.5 is in agreement with IEEE Std 344-1987; however, a multiplying factor other than 1.5 may be used if adequate justification is provided.

Copyright © 2001 IEEE. All rights reserved.

Copyright The Institute of Electrical and Electronics Engineers, Inc.
Provided by IHS under license with IEEE
No reproduction or networking permitted without license from IHS Not for Resale

B.2.3 Damping

For raceway systems qualified by dynamic testing, both for OBE and SSE, the test-RS should be developed at comparable damping values specified by the required RS. The damping mechanism in raceway systems is a function of many parameters; friction, material characteristics, and joint losses all contribute to damping. Consideration may be given to increased damping in some raceway systems due to the relative motion of electric cables.

Copyright © 2001 IEEE. All rights reserved.

Copyright The Institute of Electrical and Electronics Engineers, Inc.
Provided by IHS under license with IEEE
No reproduction or networking permitted without license from IHS
Not for Resale

Annex C

(informative)

Guidance for structural acceptance criteria for elastic design method

The guidance given in this annex may be used to evaluate acceptance for the elastic design method. Higher values of allowable stresses may be used as long as they are adequately justified.

The allowable stresses and loads for the elastic stress design method are given in C.1 through C.6.

C.1 Raceways (except cable trays) and supports

C.1.1 Normal and severe environmental loads

Allowable stresses without the one-third increase for wind and earthquake load should be as covered in either AISI Cold-Formed Steel Design Manual-1996 [B3][13] or the AISC Manual of Steel Construction-1989 [B2], whichever is applicable.

C.1.2 Extreme environmental loads

Allowable stresses for pertinent stress components should be 1.6 times the allowable codes in AISC Manual of Steel Construction-1989 [B2] or AISI Cold-Formed Steel Design Manual-1996 [B3], but should not exceed 0.9 times the yield strength of the material, (F_y).

C.2 Cable trays, raceway fittings, and accessories

C.2.1 Normal and severe environmental loads

Allowable loads should be one-half of the ultimate load or a load corresponding to one-third of the displacement at the ultimate load, whichever is smaller.

C.2.2 Extreme environmental loads

Allowable loads should be two-thirds of the ultimate load or a load corresponding to one-half of the displacement at the ultimate load, whichever is smaller.

C.3 Fastening devices

C.3.1 Normal and severe environmental loads

The maximum allowable loads should be one-half of the ultimate load.

[13]The numbers in brackets correspond to the bibliography in Annex A.

Copyright © 2001 IEEE. All rights reserved.

Copyright The Institute of Electrical and Electronics Engineers, Inc.
Provided by IHS under license with IEEE
No reproduction or networking permitted without license from IHS Not for Resale

C.3.2 Extreme environmental loads

The maximum allowable loads should be two-thirds of the ultimate load.

C.4 Welds, bolts, and threaded parts

C.4.1 Normal and severe environmental loads

The allowable stresses for pertinent stress components should be as specified in the AISI Cold-Formed Steel Design Manual-1996 [B3] or the AISC Manual of Steel Construction-1989 [B2], whichever is applicable.

C.4.2 Extreme environmental loads

Allowable stresses for pertinent stress components should be 1.6 times the allowable codes in AISI Cold-Formed Steel Design Manual-1996 [B3] or the AISC Manual of Steel Construction-1989 [B2], but should not exceed 0.9 times the yield strength of the material, (F_y).

C.5 Concrete expansion anchors

The criteria for determining allowable loads is given in ACI 349-97 for specified load combinations. Safety factors for anchor pullout should be established and justified.

C.6 Reinforced concrete structures

Allowable stresses should be as covered in ACI 349-97 for all load combinations.

Copyright © 2001 IEEE. All rights reserved.

Copyright The Institute of Electrical and Electronics Engineers, Inc.
Provided by IHS under license with IEEE
No reproduction or networking permitted without license from IHS Not for Resale

Annex D

(normative)

Criteria and guidance for seismic-experience-based qualification

This annex provides criteria and guidance for seismic-experience-based qualification for raceway systems and supports. The methodology is based on evaluation of documented performance of raceway systems in past earthquakes and tests as well as conventional analytical considerations (see the GIP [B4]). Two methodologies are given. The first is a design-by-rule method for use when new raceways and supports are to be installed. The second is a screening procedure to be used when cables are added to existing raceways or when new raceways are to be added to existing supports. The applicability of this methodology may be contingent on the licensing basis of the particular plant.

D.1 New installations (design-by-rule)

This subclause provides criteria and guidance for the design-by-rule method for new cable tray and conduit systems. Essential aspects of the design-by-rule method include

— Simple capacity checks for cable trays (conduits) and their supports that enable an efficient design process

— Use of supports made of standard light gauge channel strut members, with conservatively established vertical load capacity and significant ductile lateral displacement capability.

Recent conventional practice of raceway design in nuclear power plants has favored heavy, stiff-welded steel supports. In contrast, the use of light gauge strut members with standard clip angle connector hardware results in relatively flexible supports and raceway systems. The methodology is based on evaluation of documented performance of raceways in past earthquakes and tests as well as conventional analytical considerations (see the GIP [B4]).

D.1.1 General requirements

The general requirements in D.1.1.1 through D.1.1.6 shall apply.

D.1.1.1 Codes and standards applicability

Raceway materials shall comply with codes and standards such as NEMA VE 1-1998 and NEC. Support members shall comply with ASTM standards in building codes.

D.1.1.2 Proximity interactions

Raceway systems utilizing light metal strut supports and connection and connection details with ductile deformation capability may undergo significant displacement during an earthquake and come into contact with structures, systems, and components in close proximity. The raceway should be routed and supports placed to avoid the possibility of seismic interaction; or, if such avoidance is not possible, the acceptability of the interaction shall be established. For estimation of raceway displacement, the in-structure spectral displacement at 7% damping at the support pendulum frequency can be used as an upper bound for the raceway displacement. Upper bound seismic displacements shall be used for adjacent structures, systems, and components.

Copyright © 2001 IEEE. All rights reserved.

Copyright The Institute of Electrical and Electronics Engineers, Inc.
Provided by IHS under license with IEEE
No reproduction or networking permitted without license from IHS
Not for Resale

D.1.1.3 Differential displacement

Where the anchor points of two adjacent raceway supports may be subject to seismic differential displacement (such as at the interface of seismically independent structures), adequate flexibility shall be provided to preclude the possibility of severing the cables in the raceway. Such flexibility can be achieved by providing a gap in a cable tray and adequate slack in the cables or by providing a length of properly evaluated flexible conduit for a conduit raceway.

D.1.1.4 Protection of cable insulation

The interior of cable tray systems shall not have sharp edges, burrs, or projections that could damage cable insulation. All conduit cut ends shall be reamed or otherwise finished to remove sharp edges. Where a conduit enters a box or other fitting, a bushing or other protective feature shall be provided.

D.1.1.5 Cable fill

Cable fill in a tray shall not exceed the level of the upper edge of the tray side rail, nor shall the fill exceed IEEE Std 690-1984. Cables in cable trays with vertical or near-vertical drops of more than 3 m shall be restrained by ties to the tray or other means at least every 3 m on center.

D.1.1.6 Applicability: range of seismic excitation level

The horizontal zero period accelerations (ZPA_h) of the in-structure RS at the locations of the anchorages of the raceway supports shall not exceed 2.0 g.

D.1.2 Raceway support requirements

Cable tray span shall not exceed the allowable support span for the NEMA class (see Section 3 of NEMA VE 1-1998). In addition, the span shall be limited to the following two conditions:

— Cable tray span shall not exceed 3 m, and

— DL bending moment, M_{DL}, shall not exceed an allowable moment, M_a, where

$M_{DL} = wl^2/10$, w = cable load within tray-per-unit length, (DL only) and

$M_a = \min\{M_{\text{NEMA}}/2, M_{\text{NEMA}}/2.5(ZPA_h)\}$, M_{NEMA} = the bending moment in a tray with the NEMA allowable span length loaded with the NEMA rated load.

Tray splice plates with their bolts shall have a capacity greater than or equal to the side rail strength for bending due to vertical loads. Connector bolt stress shall not exceed the allowable values specified in Chapter N of AISI Cold-Formed Steel Design Manual-1996 [B3].

D.1.2.1 Conduit support locations

Conduit span, l_{cnd} , shall not exceed the following:

— Where the in-structure ZPA_h is less than or equal to 0.8 g,

$l_{cnd} \le l_{\text{NEC}}$, where l_{NEC} is the allowable span from the NEC

— Where the in-structure ZPA_h exceeds 0.8 g,

$l_{cnd} \le l_{\text{NEC}} (0.8 / ZPA_h)^{1/2}$

Copyright © 2001 IEEE. All rights reserved.

Copyright The Institute of Electrical and Electronics Engineers, Inc.
Provided by IHS under license with IEEE
No reproduction or networking permitted without license from IHS Not for Resale

D.1.2.2 Connectors

Cable tray and conduit shall be attached to supports using connector hardware provided by the manufacturer for this purpose. The connector hardware shall have a minimum capacity equal to the tributary DL × 2.5 × ZPA_h.

D.1.2.3 Support for fittings

Supports for cable tray fittings shall be provided as follows:

— *Horizontal elbows*. Supports shall be placed on the straight runs within 60 cm of each fitting extremity and placed at the midpoint of the curve (see Figure D.1).

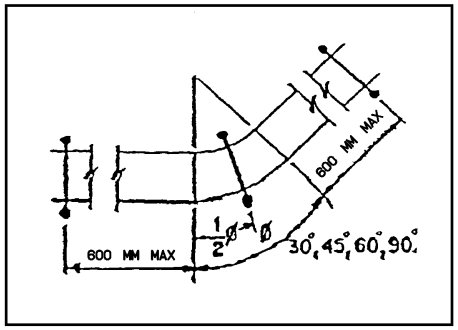

Figure D.1—Horizontal elbow supports

— *Horizontal tees*. Supports shall be placed on the straight runs within 60 cm of the three tee openings for tees with a 30 cm radius. For tees with a larger radius, the tee itself shall also be supported (see Figure D.2).

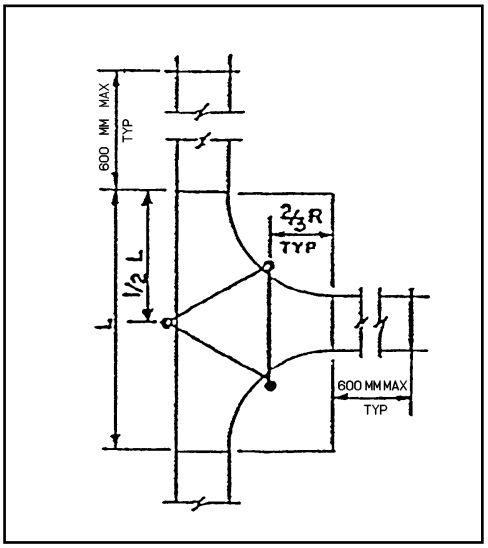

Figure D.2—Horizontal tee supports

Copyright © 2001 IEEE. All rights reserved.
Copyright The Institute of Electrical and Electronics Engineers, Inc.
Provided by IHS under license with IEEE
No reproduction or networking permitted without license from IHS
Not for Resale

— *Horizontal crosses*. Supports shall be placed on the straight runs within 60 cm of the four openings for crosses with a 30 cm radius. For crosses with a larger radius, the cross itself shall also be supported (see Figure D.3).

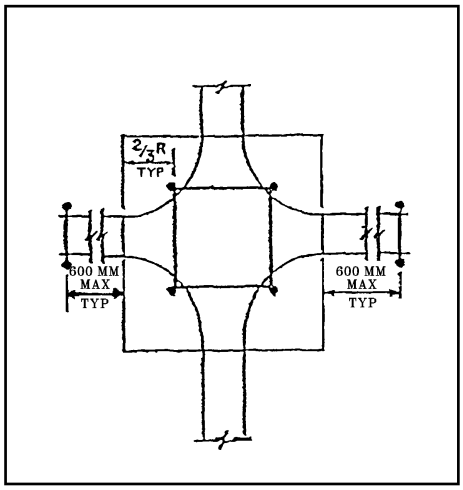

Figure D.3—Horizontal cross supports

— *Horizontal wyes*. Supports shall be placed on the straight runs within 60 cm of each fitting extremity and placed at the midpoint of the arc of the side branch (see Figure D.4).

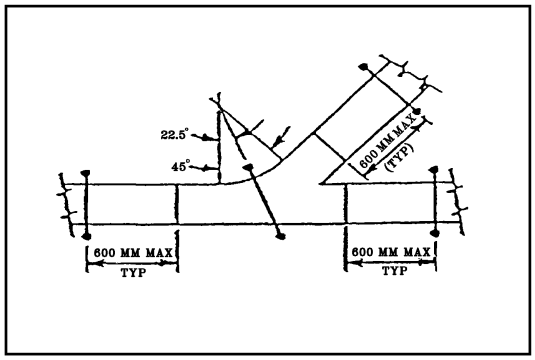

Figure D.4—Horizontal wye supports

Copyright © 2001 IEEE. All rights reserved.

Copyright The Institute of Electrical and Electronics Engineers, Inc.
Provided by IHS under license with IEEE
No reproduction or networking permitted without license from IHS
Not for Resale

— *Reducers*. Supports shall be placed on the straight runs within 60 cm of each fitting extremity (see Figure D.5 and Figure D.6).

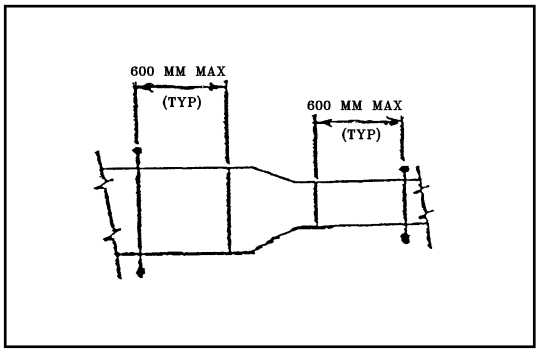

Figure D.5—Straight reducer supports

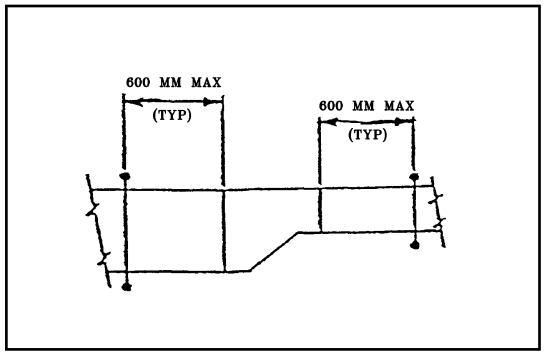

Figure D.6—Offset reducer supports

— *Vertical elbows*. Vertical cable tray elbows at the top of runs shall be supported at each end. Vertical cable tray elbows at the bottom of runs shall be supported at the top of the elbow and supported on the straight run within 60 cm of the lower extremity of the elbow (see Figure D.7).

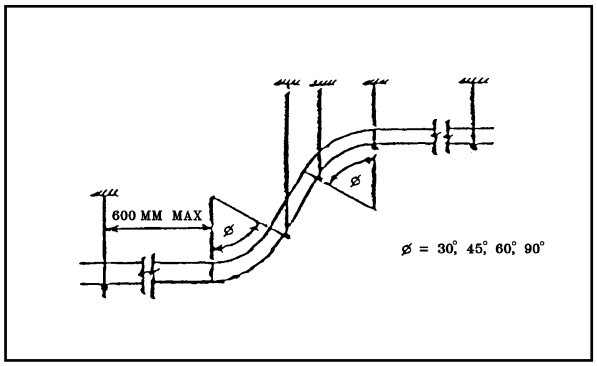

Figure D.7—Vertical elbow supports

Copyright © 2001 IEEE. All rights reserved.
Copyright The Institute of Electrical and Electronics Engineers, Inc.
Provided by IHS under license with IEEE
No reproduction or networking permitted without license from IHS
Not for Resale

— *Vertical tees*. Vertical cable tray tees shall be supported on the straight runs within 60 cm of each fitting extremity (see Figure D.8).

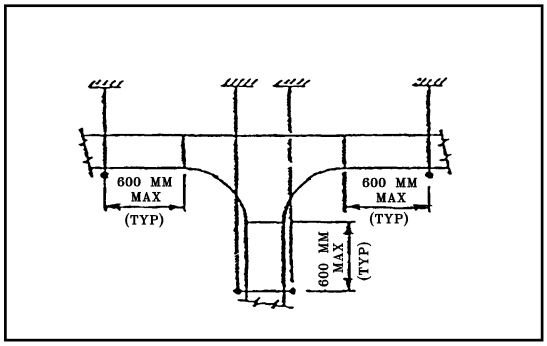

Figure D.8—Vertical tee supports

— *Vertical straight sections*. The maximum distance between cable tray vertical supports as measured along the tray shall not exceed 3 m.

— *Sloping trays and conduits*. Sloping trays shall be supported at intervals not exceeding the requirements for horizontal trays of the same design for the same installation.

— *Fittings at end of run*. A fitting at the end of a run shall have a support attached to it.

— *Junction box, outlet box, cabinet, or fitting*. Conduit shall be supported within 90 cm on each side of each junction box, outlet box, cabinet, or fitting.

D.1.2.4 Support capacity

Figure D.9 illustrates the steps in the verification of support capacity.

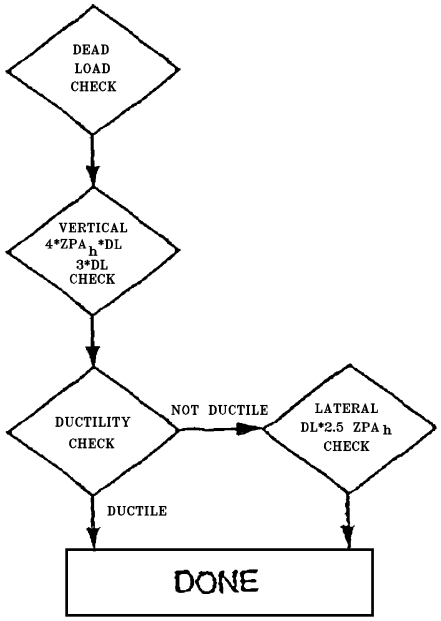

Figure D.9—Steps in the verification of support capacity

Copyright © 2001 IEEE. All rights reserved.

Copyright The Institute of Electrical and Electronics Engineers, Inc.
Provided by IHS under license with IEEE
No reproduction or networking permitted without license from IHS
Not for Resale

D.1.2.4.1 DL check

All raceway supports shall be designed to resist a minimum vertical load equal to the tributary DL carried by the support and a concurrent LL of 115 kg[14] acting at any point (at only one point at a time) within the support to account for various construction loads. All components (such as bracket members, support members, member connections, conduit clamps, and support anchorage) shall be designed for this load combination. All effects resulting from eccentricities (for example, load-to-anchor-point eccentricity) shall be considered. The allowable loads and stresses are specified in Table D.1.

Table D.1—Allowable loads and stresses

Load case	Item	Allowable
DL + LL	Strut members and connector hardware	Manufacturer's allowable loads
	Structural steel, welds, and bolts	AISC working stress allowable load or stress [B2]
Vertical load max [3 × DL or 4 × ZPA_h × DL] and transverse load max [2 g or 2.5 × ZPA_h]	Short members and connector load hardware	Manufacturer's allowable loads (minimum factor of safety of 3)
Vertical load max [3 × DL or 4 × ZPA_h × DL] and transverse load max [2 g or 2.5 × ZPA_h]	Structural steel, welds, and bolts	AISC Section N allowable load or stress [B2]
All load cases	Expansion anchor bolts	Manufacturer's allowable loads (minimum factor of safety of 5). Interaction: for V/Va < 0.3 P/Pa = 1.0 for 0.3 < V/Va < 1.0 0.7 × P/Pa + V/Va = 1.0
	Cast-in-place anchors	Per ACI 349-97

D.1.2.4.2 Vertical 4 × ZPA_h × DL and 3 × DL check

All raceway supports, except floor-mounted raceway supports, shall be designed to resist a minimum vertical load equal to three times the tributary DL carried by the support or four times the ZPA_h (at the support location) times the resulting tributary DL, whichever is greater. Eccentricities resulting in anchor prying and eccentricities between vertical support members and anchor points shall, in general, be ignored. The allowable loads and stresses are specified in Table D.1.

D.1.2.4.3 Ductility check

D.1.2.4.3.1 Ductile supports

The preferred support type for a new installation is a trapeze support made of standard lightweight channel strut members connected in a ductile manner with standard clip angles and channel nuts. Examples of ductile lightweight strut connections are shown in Views A, B, C, and D in Figure D.10. Supports constructed of welded steel structural members are ductile if the anchor point weld is stronger than the vertical member

[14]Units are given in the metric system. The weight given of 115 kg is approximately 250 lbs, which is the value specified in NEMA VE 1-1998 for a concurrent LL acting at any point in the span of the cable tray.

Copyright © 2001 IEEE. All rights reserved.

Copyright The Institute of Electrical and Electronics Engineers, Inc.
Provided by IHS under license with IEEE
No reproduction or networking permitted without license from IHS
Not for Resale

(see View E in Figure D.10). For light metal strut framing members, welded connections are likely to be nonductile and thus not acceptable. Ceiling connection plates attached to concrete with expansion anchors are nonductile unless the anchorage is stronger than the plastic flexural strength of the vertical support member.

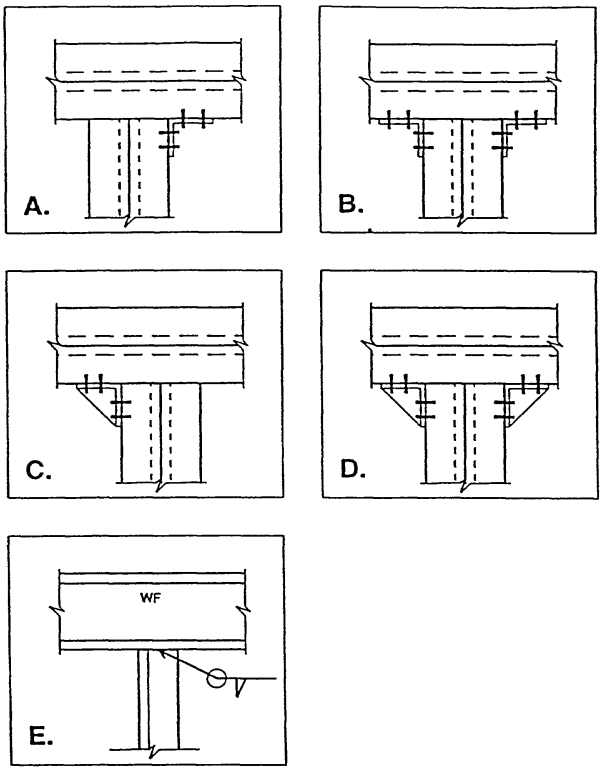

Figure D.10—Examples of ductile lightweight strut connections

D.1.2.4.3.2 Nonductile supports

Nonductile support configurations are illustrated in Figure D.11. Diagonally braced supports and unbraced rigid trapeze supports have the potential of significantly increasing the pullout loads on anchorage when the support is subjected to horizontal motion. Braced supports and other nonductile supports require design for lateral load capacity.

Copyright © 2001 IEEE. All rights reserved.

Copyright The Institute of Electrical and Electronics Engineers, Inc.
Provided by IHS under license with IEEE
No reproduction or networking permitted without license from IHS
Not for Resale

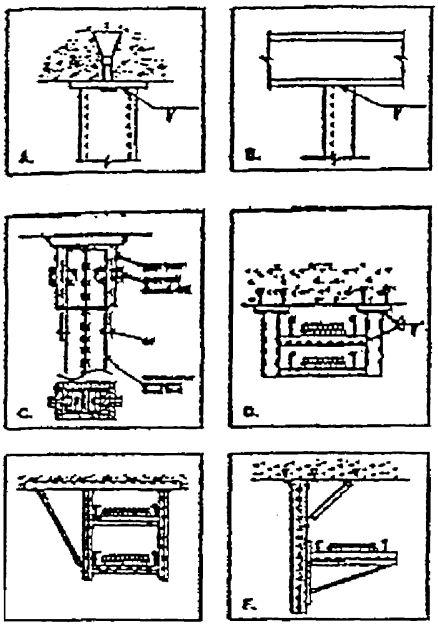

Figure D.11—Examples of potentially nonductile raceway support connection details and configurations

D.1.2.4.4 Lateral load check

Potentially nonductile supports and supports with a transverse brace shall be designed for transverse support capacity in addition to the vertical support capacity. Lateral load check does not apply to supports with ductile lateral deformation capability or with rigid wall-mounted supports.

The support shall be designed for a transverse load at the location of each cable tray or conduit equal to the tributary weight times 2.5 times the ZPA_h of the floor RS at the anchor point of the support. DL shall be applied concurrently with the transverse load.

D.1.2.4.5 System hard spots

System hard spots are isolated short stiff supports in a system of more flexible supports. Because of their stiffness, they attract large lateral or longitudinal loads; and their design involves considerations not required for standard ductile supports. The concern is mainly associated with longitudinal motion. Cable tray or conduit systems with a long run of supports that are relatively flexible in the longitudinal direction may also contain a support that is relatively stiff as shown in Figure D.12. The stiff support may be subjected to considerable load from longitudinal movement of the cable tray or conduit run.

Copyright © 2001 IEEE. All rights reserved.

Copyright The Institute of Electrical and Electronics Engineers, Inc.
Provided by IHS under license with IEEE
No reproduction or networking permitted without license from IHS Not for Resale

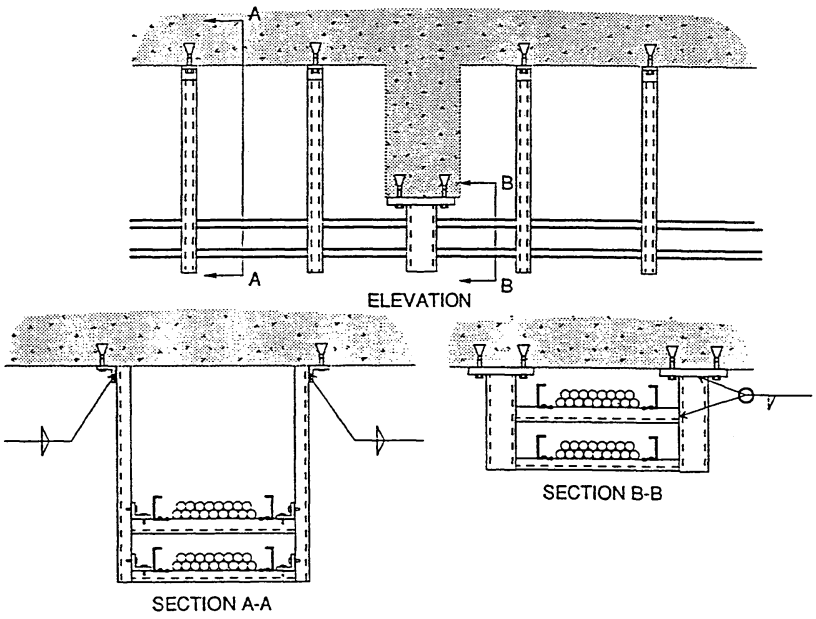

Figure D.12—System hard spot

Such supports should be avoided wherever possible, even if adjustment of support locations to avoid hard spots results in some tray spans being significantly less than the maximum allowable. If such supports cannot be avoided, they shall be designed for lateral load in accordance with D.1.2.4.5 and the following paragraph.

For system transverse (longitudinal) hard spots, the transverse (longitudinal) load shall be based on a tributary span extending to one-half the distance to the next transverse (longitudinal) hard spot. Alternatively, the design of a hard spot support may be based on a localized study of the load distribution in the area of the support.

D.1.2.4.6 Floor-mounted supports

Response characteristics of floor-mounted cantilever of unbraced frame supports are not favorable. In the presence of any lateral deflection, gravity causes a destabilizing (P-Δ) effect, whereas in a suspended support, gravity introduces a restoring force toward a stable equilibrium. If use of a floor-mounted support cannot be avoided, it shall be welded steel or bolted strut braced against loads in both horizontal directions. The capacity shall be verified for the loads specified in D.1.2.4.1, D.1.2.4.2, and D.1.2.4.4. The horizontal load of 2.5 times ZPA_h shall be applied

— In the transverse direction, combined with the DL, and
— Nonconcurrently in the longitudinal direction, combined with the DL.

D.1.2.5 Support anchorage

Typically, cable tray and conduit supports are anchored to concrete using expansion anchors. Shell anchors with lead, cast iron, or plastic inserts shall not be used. Allowable load values for expansion anchors shall be taken as manufacturer's average ultimate capacity divided by a factor of safety of 5.0. The manufacturer's

Copyright © 2001 IEEE. All rights reserved.

Copyright The Institute of Electrical and Electronics Engineers, Inc.
Provided by IHS under license with IEEE
No reproduction or networking permitted without license from IHS
Not for Resale

provisions for installation, embedment, edge distance, spacing, and shear-tension interaction shall be followed. Anchors shall be placed only in sound, uncracked concrete. (Hairline cracks less than 10 mils are permissible.)

Allowable loads for cast-in-place headed studs shall be determined in accordance with the provisions of the GIP [B4].

D.1.2.6 Clip angle fatigue

Fatigue analysis shall be performed on the clip angle connectors used at the top of vertical strut members. Clip angle fatigue is within acceptable limits if at the support's first transverse natural frequency, the 10% damped spectral ordinate of the in-structure acceleration RS is below the ordinate or the curve in Figure D.13.

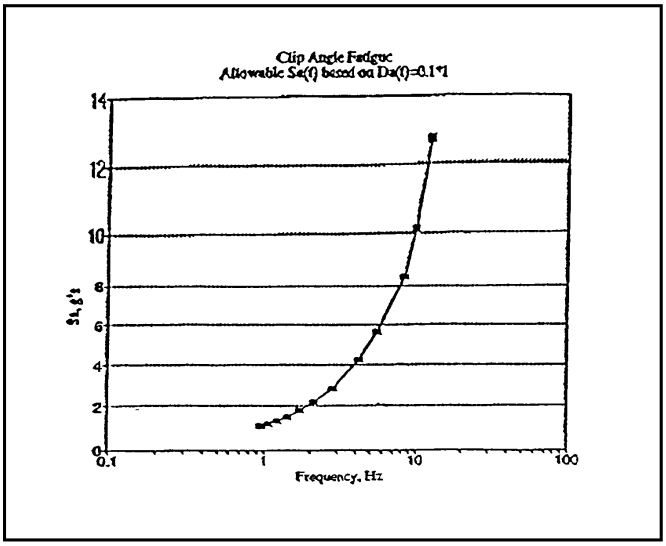

Figure D.13—Clip angle fatigue spectrum

D.2 Modification of existing installations

Often cables are added to existing cable trays, or new cable trays or conduits are supported on existing supports. In either case, the raceway review of Chapter 8 of the GIP [B4] is applicable contingent on the licensing basis of the particular plant.

The raceway review consists of

- A plant walkdown of the raceways, which are evaluated against a set of walkdown guidelines (such as caveats and inclusion rules), and
- A quantitative evaluation of a selection of bounding supports against a set of limited analytical review guidelines.

The portions of the raceway systems that do not pass these guidelines are classified as outliers and are subject to further evaluation, as described in the GIP [B4], or modification. The personnel applying the walkdown and limited analytical review guidelines shall meet the qualifications of a seismic review team as defined in Section 2 of the GIP [B4].

Copyright © 2001 IEEE. All rights reserved.

Copyright The Institute of Electrical and Electronics Engineers, Inc.
Provided by IHS under license with IEEE
No reproduction or networking permitted without license from IHS
Not for Resale