ANSI/IEEE Std 622-1987
(Revision of ANSI/IEEE Std 622-1979)

An American National Standard

IEEE Recommended Practice for the Design and Installation of Electric Heat Tracing Systems for Nuclear Power Generating Stations

Sponsor
Power Generation Committee
of the
IEEE Power Engineering Society

Approved December 11, 1986
IEEE Standards Board

Approved November 23, 1987
American National Standards Institute

© Copyright 1987 by

The Institute of Electrical and Electronics Engineers, Inc

345 East 47th Street, New York, NY 10017, USA

No part of this publication may be reproduced in any form, in an electronic retrieval system or otherwise, without the prior written permission of the publisher.

Copyright The Institute of Electrical and Electronics Engineers, Inc.
Provided by IHS under license with IEEE
No reproduction or networking permitted without license from IHS
Not for Resale

IEEE Standards documents are developed within the Technical Committees of the IEEE Societies and the Standards Coordinating Committees of the IEEE Standards Board. Members of the committees serve voluntarily and without compensation. They are not necessarily members of the Institute. The standards developed within IEEE represent a consensus of the broad expertise on the subject within the Institute as well as those activities outside of IEEE which have expressed an interest in participating in the development of the standard.

Use of an IEEE Standard is wholly voluntary. The existence of an IEEE Standard does not imply that there are no other ways to produce, test, measure, purchase, market, or provide other goods and services related to the scope of the IEEE Standard. Furthermore, the viewpoint expressed at the time a standard is approved and issued is subject to change brought about through developments in the state of the art and comments received from users of the standard. Every IEEE Standard is subjected to review at least once every five years for revision or reaffirmation. When a document is more than five years old, and has not been reaffirmed, it is reasonable to conclude that its contents, although still of some value, do not wholly reflect the present state of the art. Users are cautioned to check to determine that they have the latest edition of any IEEE Standard.

Comments for revision of IEEE Standards are welcome from any interested party, regardless of membership affiliation with IEEE. Suggestions for changes in documents should be in the form of a proposed change of text, together with appropriate supporting comments.

Interpretations: Occasionally questions may arise regarding the meaning of portions of standards as they relate to specific applications. When the need for interpretations is brought to the attention of IEEE, the Institute will initiate action to prepare appropriate responses. Since IEEE Standards represent a consensus of all concerned interests, it is important to ensure that any interpretation has also received the concurrence of a balance of interests. For this reason IEEE and the members of its technical committees are not able to provide an instant response to interpretation requests except in those cases where the matter has previously received formal consideration.

Comments on standards and requests for interpretations should be addressed to:

Secretary, IEEE Standards Board
345 East 47th Street
New York, NY 10017
USA

Copyright The Institute of Electrical and Electronics Engineers, Inc.
Provided by IHS under license with IEEE
No reproduction or networking permitted without license from IHS
Not for Resale

Foreword

(This Foreword is not a part of IEEE Std 622-1987, IEEE Recommended Practice for the Design and Installation of Electric Heat Tracing Systems for Nuclear Power Generation Stations.)

The realization that electric heat tracing systems play an important role in the normal operation of both nuclear and non-nuclear processes in nuclear power generating stations has now come of age. This is apparent by the increased amount of space being devoted to electric heat tracing in station technical specifications, system descriptions, and operating criteria. Such electric heat tracing systems are applied on borated water systems and on water treatment systems such as caustic. Since boric acid and caustics in water will crystalize or precipitate out of the solution depending on their concentrations at temperatures above ambient, and since such crystallization can make the piping system inoperable for normal operation, electric heat tracing systems are required to keep the solutions and piping systems in a state to perform their intended functions. Electric heat tracing systems may also be applied on piping located outdoors at nuclear generating stations for the purpose of preventing the piping systems from freezing. It should be noted that each and all of these piping systems can include valves, pumps, strainers, tanks, and instrumentation components that can be rendered inoperable due to solutions crystallizing or freezing. Therefore, a definite need exists within the power industry for recommendations that provide a uniform method for the design and installation of electric heat tracing systems that meet the requirements for rendering reliable operation of the piping system. Without such recommendations, station reliability may be jeopardized.

This recommended practice is intended to meet the design and installation needs for pressurized water reactor (PWR) and boiling water reactor (BWR) nuclear generating stations. Breeder reactors and other types of applications are outside the scope of this document. Also, the principles in this document are applicable to all types of generating stations, for example, fossil, hydroelectric, etc. Presented herein are such recommendations and topics as identification of piping systems to be heated, temperature requirements, heater design considerations, heat tracing systems design (including control and monitoring), power systems design, installation of electric heat tracing systems, testing of the systems, and maintenance considerations.

Since electric heat tracing systems are interrelated with electric power and alarm systems, other IEEE standards should be referred to when using this recommended practice. The recommendations presented herein are not intended to supersede any current IEEE standards or practices, and sound engineering judgment should always be used when applying this or any other IEEE standard.

Electric heat tracing systems play an important role in the normal operation of nuclear generating stations. Therefore, redundant circuit and heater considerations with respect to station reliability are covered in this recommended practice along with alarm considerations. This document recommends that electric heat tracing systems not be classified as Class lE systems and that critical process control systems be powered from reliable station power sources. If these reliable power sources are the engineered safety features (ESF) buses, then the electric heat tracing systems should be powered through suitable isolation devices in accordance with ANSI/IEEE Std 308-1980, IEEE Standard Criteria for Class lE Power Systems for Nuclear Power Generating Stations, and ANSI/IEEE Std 384-1981, IEEE Standard Criteria for Independence of Class lE Equipment and Circuits.

The recommendation for not classifying electric heat tracing systems as Class lE is based on station operating criteria. In its investigation of electric heat tracing systems for critical process piping, the working group could find no evidence that a properly designed system would come under a Class lE classification for proper performance. Electric heat tracing systems that are applied on reactor injection piping systems do not perform any safety functions either during or after a postulated loss-of-coolant accident (LOCA). Instead, electric heat tracing systems render such piping systems operable during normal station operation and thus are not needed during or after a postulated LOCA. For further discussion and technical explanations on normal and accident station operations with respect to nonClass lE electric heat tracing systems, reference should be made to Appendix B of this document.

An exception to this recommendation is the classification of electric heat tracing systems applied on post-accident sampling systems. Such post-accident sampling systems were mandated by the Nuclear Regulatory Commission as

Copyright The Institute of Electrical and Electronics Engineers, Inc.
Provided by IHS under license with IEEE
No reproduction or networking permitted without license from IHS
Not for Resale

part of the Three Mile Island Unit 2 retrofit program initiated after this standard was first published in 1979. Explanation of these requirements may be found in Appendix C of this document.

This recommended practice correlates industry practices; it is not intended to be an exhaustive compilation or a rigid procedure manual. The document was prepared by the working group on Electric Heat Tracing Systems, which was formed by the Station Design Subcommittee of the Power Generation Committee.

At the time this document was approved, the members of the working group were:

C. L. Sandberg, *Chair*

P. Baen	E. Janus	H. Romanowski
H. Caldwell	M. Plant	R. Schilling
J. J. Dennehy	D. E. Roberts	R. S. Schoellkopf

The working group would like to offer a special acknowledgement to past members who participated in the writing of the original ANSI/IEEE Std 622-1979 : G. P. Alexander, R. O. Bylin, W. C. Leslie, J. T. Mattox, R. A. McInturff, and R. M. Oehlschlaeger.

At the time this document was approved, the members of the Station Design Subcommittee were:

D. E. Roberts, *Chair*

W. W. Avril	M. E. Jackowski	J. M. Sappington
M. S. Baldwin	R. I. Longwell	C. Sclafani
J. H. Bellack	O. S. Mazzoni	R. G. Scott
R. O. Bylin	M. W. Migliaro	M. N. Sprouse
J. B. Cannon	S. Nikolakakos	J. E. Stoner, Jr.
J. W. Colwell	E. L. Owen	R. E. Strasser
R. E. Cotta	J. L. Parris	J. B. Sullivan
G. R. Engman	R. E. Penn	H. E. Yocum, Jr.
W. M. Fenner	C. R. Pope	R. Zweigler
R. E. Fenton	E. P. Rothong	
J. J. Heagerty	C. L. Sandberg	

At the time this document was approved, the members of the Power Generation Committee were:

R. W. Cantrell, *Chair*
R. E. Cotta, *Vice Chair*
M. W. Migliaro, *Secretary*

W. W. Avril	R. S. Coleman	R. N. Friedman
M. S. Baldwin	R. E. Cotta	D. I. Gorden
J. H. Bellack	M. L. Crenshaw	R. K. Gupta
I. B. Berezowsky	D. J. Damsker	R. D. Handel
F. L. Brennan	R. S. Darke	J. J. Heagerty
L. D. Boydstun	P. Davidson	M. E. Jackowski
G. G. Boyle	D. Diamant*	W. D. Jackson
S. R. Brockschink	G. R. Engman	N. Jaleeli
P. G. Brown	W. H. Esselman	J. H. Jones
J. B. Cannon	T. F. Faulkner	E. F. Kaprielian
E. F. Chelotti	W. M. Fenner	J. Kariger
H. E. Church, Jr	A. H. Ferber	F. Keay
C. H. Clarridge	W. A. Frederick	C. E. Kneeburg

Copyright The Institute of Electrical and Electronics Engineers, Inc.
Provided by IHS under license with IEEE
No reproduction or networking permitted without license from IHS
Not for Resale

S. Kuznetsov
P. R. Landrieu
S. Law
P. Lewis
H. E. Lokay
G. L. Lurj
J. T. Madill
J. D. Mather
O. S. Mazzoni
T. M. McMahon
G. R. Meloy
D. H. Miller
J. L. Mills
W. S. Morgan
P. A. Nevins
S. Nikolakakos
J. T. Nikolas
M. I. Olken
R. E. Penn
R. Ramakumar
R. J. Reiman
D. E. Roberts
R. G. Scott
A. J. Spurgin
R. B. Squires
J. V. Stephens
G. I. Stillman
J. E. Stoner, Jr
J. B. Sullivan
V. C. Sulzberger
S. Tjepkema
R. H. Waltman
E. J. Warchol
M. Warren
K. L. West
T. R. Whittemore
J. P. Whooley
R. F. Willett
C. J. Wylie
T. D. Younkins

*Past chairman

The following persons were on the balloting committee that approved this document for submission to the IEEE Standards Board:

W. W. Avril
M. S. Baldwin
J. H. Bellack
I. B. Berezowsky
G. Berman
R. W. Cantrell
H. E. Church
R. S. Coleman
R. E. Cotta
M. L. Crenshaw
D. J. Damsker
P. M. Davidson
G. R. Engmann
W. M. Fenner
A. H. Ferber
D. I. Gorden
R. D. Handel
J. H. Jones
F. W. Keay
P. R. Landrieu
G. L. Luri
J. T. Madill
O. S. Mazzoni
M. W. Migliaro
J. T. Nikolas
R. E. Penn
J. D. Plaxco
R. J. Reiman
D. E. Roberts
R. G. Scott
A. J. Spurgin
G. I. Stillman
J. E. Stoner, Jr
J. B. Sullivan
T. R. Whittemore
J. P. Wooley

When the IEEE Standards Board approved this standard on December 11, 1986, it had the following membership:

John E. May, *Chair*
Irving Kolodny, *Vice Chair*
Sava I. Sherr, *Secretary*

James H. Beall
Fletcher J. Buckley
Paul G. Cummings
Donald C. Fleckenstein
Jay Forster
Daniel L. Goldberg
Kenneth D. Hendrix
Irvin N. Howell
Jack Kinn
Joseph L. Koepfinger*
Edward Lohse
Lawrence V. McCall
Donald T. Michael*
Marco W. Migliaro
Stanley Owens
John P. Riganati
Frank L. Rose
Robert E. Rountree
Martha Sloan
Oley Wanaselja
J. Richard Weger
William B. Wilkens
Helen M. Wood
Charles J. Wylie
Donald W. Zipse

*Member emeritus

--`,,`-`-`,,`,,`,`,,`---

Copyright The Institute of Electrical and Electronics Engineers, Inc.
Provided by IHS under license with IEEE
No reproduction or networking permitted without license from IHS
Not for Resale

CLAUSE PAGE

1. Scope and Purpose 1

2. Definitions....1

3. References....2

4. Design of Electric Heat Tracing Systems 3

4.1 Identification of Requirements.... 3
4.2 Heater Design Considerations.... 9
4.3 Power System Design Considerations 14
4.4 Temperature Control Considerations.... 15
4.5 Alarm Considerations 18
4.6 Finished Drawings and Documents 20
4.7 Test Considerations.... 20

5. Installation of Electric Heat Tracing Systems....21

5.1 Distribution and Use of Drawings at the Installation Site 21
5.2 Receiving of Materials.... 21
5.3 Installation of Materials 21
5.4 Startup Testing for Critical Process Control Systems.... 22

6. Maintenance of Electric Heat Tracing Systems....23

6.1 Record Keeping.... 23
6.2 Heater, Alarm, and Temperature Controller Circuit Checks 24
6.3 Inspections 24
6.4 Periodic Testing 24

Annex A (Informative) Temperature and Solubility Tables of Borated Water, Caustic Soda, and Sodium Pentaborate Systems....25

Annex B (Informative) The Function of Electric Heat Tracing Systems Required to Support Engineered Safety Features Piping Systems....27

Annex C (Informative) Electric Heat Tracing Requirements for Post-Accident Sampling Systems in Nuclear Power Generating Stations....31

Copyright The Institute of Electrical and Electronics Engineers, Inc.
Provided by IHS under license with IEEE
No reproduction or networking permitted without license from IHS Not for Resale

IEEE Recommended Practice for the Design and Installation of Electric Heat Tracing Systems for Nuclear Power Generating Stations

1. Scope and Purpose

This document provides recommended practices for designing and installing electric heat tracing systems in nuclear power generating stations. These electric heat tracing systems are applied, both for critical process temperature control and for process temperature control, on mechanical piping systems that carry borated water, caustic soda, and other solutions. Electric heat tracing systems are also applied on water piping systems to prevent them from freezing in cold weather. The recommendations include identification of requirements, heater design considerations, power systems design considerations, temperature control considerations, alarm considerations, finished drawings and documents, installation of materials, startup testing, temperature tests, and maintenance of electric pipe heating systems.

The purpose of this document is to provide recommendations that may be used in the design, installation, and maintenance of electric heat tracing systems as applied to mechanical piping systems. These recommendations are intended to ensure that the piping systems will be maintained at specified operating temperatures, which in turn will ensure that the piping systems' fluids will be available not only during station operation but also during normal and emergency shutdown.

2. Definitions

The following definitions apply specifically to the subject matter in this recommended practice. In some cases, more than one term or phrase is defined because in industry practice the terms or phrases are used interchangeably. Additional definitions of terms or phrases used in this document may be found by referring to ANSI/IEEE Std 100-1984 [2].[1]

base line data: Information retained for the purpose of evaluation against repeated information in order to establish trends in parameters.

[1]The numbers in brackets correspond to those of the references listed in Section 3.

Copyright © 1987 IEEE All Rights Reserved

--`,,`-`-`,,`,,`,`,,`---
Copyright The Institute of Electrical and Electronics Engineers, Inc.
Provided by IHS under license with IEEE
No reproduction or networking permitted without license from IHS
Not for Resale

controller: A device that regulates the state of a system by comparing a signal from a sensor located in the system with a predetermined value and adjusting its output to the predetermined value. Controllers, as used in electric heat tracing systems, regulate temperatures on the system and can be referred to as *temperature controllers* or *thermostats*. Controllers can be mechanical (bulb, bimetallic) or electrical (thermocouple, RTD, thermistor).

critical freeze protection: The use of electric heat tracing systems to prevent the temperature of fluids from dropping to or below the freezing point of the fluid in important or critical outdoor (usually) piping systems at nuclear generating stations. An example of a critical freeze protection system is the heating for the nuclear service water system.

critical process control: The use of electric heat tracing systems to increase or maintain (or both) the temperature of fluids (or processes) in important or *critical* mechanical piping systems including pipes, pumps, valves, tanks, instrumentation, etc. An example of an important or critical mechanical piping system would be the safety injection system.

electric heat tracing system: A system of components and devices consisting of electric heaters, controllers, sensors, dedicated power systems components, such as transformers, panelboards, cables, and system alarm devices (as required) that, when taken together as a system, are used toincrease or maintain the temperature of fluids in mechanical pipes, valves, pumps, tanks, instrumentation, etc.

electrical insulation, insulation (cable): A part that is relied upon to insulate the conductor from other conductors or conducting parts or from ground. Electrical insulation as related to electric heat tracing systems includes that part of a heater that electrically insulates the currentcarrying conductor(s) from the sheath material.

freeze protection: The use of electric heat tracing systems to prevent the temperature of fluids from dropping to or below the freezing point of the fluid. Freeze protection is usually associated with piping, pumps, valves, tanks, instrumentation, etc, such as water lines, that are located outdoors or in unheated building.

heater, electric heater, heating element: A length of resistance material connected between terminals and used to generate heat electrically. Heaters, as used in this application, can take the form of cables with various sheath materials, blankets, and pads.

heat sink: A part that absorbs heat. Heat sinks, as related to electric heat tracing systems, are those masses of materials that are directly connected to mechanical piping, valves, tanks, etc, that can absorb the heat generated by heaters, thus reducing the effect of the heater. Typical heat sinks can be pipe hangers, valve operators, etc.

process control: The use of electric heat tracing systems to increase or maintain, or both, the temperature of fluids (or processes) in mechanical piping systems including pipes, pumps, valves, tanks, instrumentation, etc, in power generating stations.

redundant, redundancy: The introduction of auxiliary elements and components to a system to perform the same function as other elements in the system for the purpose of improving reliability. Redundant electric heat tracing systems consist of two heaters and two controllers, each with its own sensor, supplied from two power systems and two alarms, each system independent of the other but all applied to the same mechanical piping, valves, tanks, etc. Redundant electric heat tracing systems are referred to as *primary* and *backup* in this recommended practice.

sensor, sensing element: The first system element that responds quantitatively to the measurand and performs the initial measurement operation. Sensors, as used in electric heat tracing systems, respond to the temperature of the system and may be directly connected to controllers, alarms, or both. Sensors can be mechanical (bulb, bimetallic) or electrical (thermocouple, RTD, thermistor).

thermal insulation: A material having a relatively high resistance to heat flow and used primarily to retard the flow of heat.

3. References

The following publications shall be used in conjunction with this standard:

Copyright © 1987 IEEE All Rights Reserved

Copyright The Institute of Electrical and Electronics Engineers, Inc.
Provided by IHS under license with IEEE
No reproduction or networking permitted without license from IHS Not for Resale

[1] ANSI/ASME NQA-2-1986, Quality Assurance Requirements for Nuclear Power Plants.[2]

[2] ANSI/IEEE Std 100-1984, IEEE Standard Dictionary of Electrical and Electronics Terms.[3]

[3] ANSI/IEEE Std 306-1980, IEEE Standard Criteria for Class lE Power Systems for Nuclear Power Generating Stations.

[4] ANSI/IEEE Std 384-1981, IEEE Standard Criteria for Independence of Class lE Equipment and Circuits.

[5] ANSI/IEEE Std 515-1983, IEEE Recommended Practice for the Testing, Design, Installaiton, and Maintenance of Electrical Resistance Heat Tracing for Industrial Applications.

[6] ANSI/IEEE Std 622A-1984, IEEE Recommended Practice for the Design and Installation of Electric Pipe Heating Control and Alarm Systems for Power Generating Stations.

[7] ANSI/NFPA 70-1987, National Electrical Code.[4]

4. Design of Electric Heat Tracing Systems

The function of an electric heat tracing system is to provide, to an insulated mechanical piping system, heat that will maintain the fluid in the system within its specified operating temperature range. On some occasions, heatup of the fluid to its operating temperature range may be required. Various thermal, physical, mechanical, electrical, and operational design parameters should be considered to ensure proper design of the electric heat tracing system. The mechanical and electrical properties of the heating system should not be impaired by continuous or intermittent operation under the environmental and operating conditions specified.

4.1 Identification of Requirements

An electric heat tracing system design should clearly identify the thermal, physical, mechanical, electrical, and system associated requirements, such as hazardous and corrosive environments.

4.1.1 Piping and Related Equipment to be Heated

To determine the heating requirements of a mechanical piping system, it is necessary to know the following:

1) Lowest and highest expected ambient temperatures
2) Desired maintain temperature
3) Maximum and minimum operating temperature
4) Pipe size, length, and material
5) Type and number of valves
6) Type and number of pipe joints
7) Type and number of hangers and supports
8) Flow patterns
9) Insulation type, thickness, dimensions, and jacket used, if any
10) Insulation *K* factor
11) Heatup requirements

[2]All ANSI publications are available from the Sales Department, American National Standards Institute, 1430 Broadway, New York, NY 10018; ASME publications are available from the Order Department, American Society of Mechanical Engineers, 22 Law Drive, Fairfield, NJ 07007.
[3]IEEE publications are available from the Service Center, The Institute of Electrical and Electronics Engineers, 445 Hoes Lane, PO Box 1331, Piscataway, NJ 08855-1331.
[4]NFPA publications can be obtained from Publications Sales, National Fire Protection Association, Batterymarch Park, Quincy, MA 02269.

Copyright © 1987 IEEE All Rights Reserved

Copyright The Institute of Electrical and Electronics Engineers, Inc.
Provided by IHS under license with IEEE
No reproduction or networking permitted without license from IHS Not for Resale

12) Type of control
13) Wind factor (if outdoors)
14) High and low alarm points (when required)
15) Number, size, and length of vertical pipe runs
16) Type of fluid and minimum and maximum flow
17) Process fluid freezing, boiling or crystalization point.

It is important to determine specifically any additional heat required for pipe hangers, supports, and restraints that cannot be completely or properly insulated to avoid their being heat sinks. Small tanks, pumps, and other irregular surfaces may require separate enclosures, heaters, and controls for system integrity and maintenance considerations. Large insulated tanks may use surface, immersion, or circulation-type heaters. Equipment such as *canned* pumps that utilize heated enclosures should have provisions for heat release when the pumps are running. Other lines that may require heating are instrument, drain, and sample lines. Unheated piping that interfaces with piping to be heated can create a large heat sink. Thus heating circuits may be necessary to heat portions of the interface piping.

Special consideration should be given when heating temperature-sensitive pipe (plastic, plastic lined, fiberglass, etc) to ensure that the maximum sheath temperature of the heater is below the maximum allowable temperature of the pipe material. Since the thermal conductivity of nonmetallic material is much lower than that of steel, the electric heat tracing design should take into consideration this resistance to heat flow through the pipe wall.

4.1.2 Heater Requirements

Heater requirements should take the following into consideration:

4.1.2.1 Maintained Process Temperature

Some process systems require that the fluids being carried by the pipe be *maintained* at a temperature consisten; with the temperature at which the fluid enters the system, the solubility level of the fluid or its viscosity, or both, and the end-use requirements.

Examples of such process systems are:

1) Boron recovery
2) Safety injection
3) Chemical and volume control
4) Liquid waste disposal
5) Sodium pentaborate
6) Boric acid transfer
7) Solid waste disposal
8) Waste management
9) Caustic soda
10) Standby liquid control
11) Fuel oil
12) Normal operation gas analysis

The amount of heat applied to maintain a fluid at a given temperature should be sufficient to replace the losses through the thermal insulation and heat sinks at a temperature above the controller turnoff point.

Any static piping system with a requirement for maintained process heating should be initially filled at operating temperature, or considerable time (days) allowed for heatup.

Copyright © 1987 IEEE All Rights Reserved

--`,,`-`-`,,`,,`,`,,`---

Copyright The Institute of Electrical and Electronics Engineers, Inc.
Provided by IHS under license with IEEE
No reproduction or networking permitted without license from IHS Not for Resale

4.1.2.2 Heatup Requirements

Some process systems require that the fluids be increased in temperature. When electric heat tracing systems are used in such capacities, it is necessary to supply additional heat above that required to maintain the operating temperature. The extent of the additional heating will depend on the maximum temperature required, the lowest starting temperature, the process flow rate, the length of time specified to reach the heatup temperature, and the specific heat of the process, pipe, and insulation.

4.1.2.3 Freeze Protection Requirements

Where process or storage systems are subject to temperatures that can fall to or below the freezing temperatures of the fluid, it becomes necessary to protect the fluid from freezing with electric heat tracing and thermal insulation.

4.1.3 Temperature Requirements

The specified operating temperature range of an electric heat tracing system is determined by the fluid's physical and chemical characteristics and the heating system's compatibility with the piping system, including pump, seal and gasket material, pipe lining, heat exchangers, etc. The temperature requirements for the various electric heat tracing systems are outlined as follows:

1) Critical process control (such as boric acid and sodium pentaborate systems) should have operating temperature ranges set above the crystallization temperature of the fluid to prevent plugging of the piping during normal and abnormal operating conditions. In addition, the maximum temperature should be that temperature that will not physically damage the mechanical equipment to which the heating is applied nor be detrimental to the process fluid.
2) Process control (such as caustic and fuel oil systems) should have operating temperature ranges set above the minimum temperature at which the pumping system, etc, will continue to function at design flow rate and pressure. The maximum temperature should be that temperature that will not result in detrimental fluid vaporization or pumping system operation.
3) Freeze protection control (such as outdoor water systems) should have a minimum temperature set approximately 5 °C (9 °F) above the process freeze point to prevent any freezing caused by variations in the ambient temperature along the piping system. The maximum temperature should be that temperature that will not result in detrimental fluid vaporization or pumping system operation.
4) Critical freeze protection control (such as makeup water storage systems) should have the temperature set the same as described under freeze protection. However, separate pipe sensing controllers are recommended for critical freeze protection.

The minimum ambient temperature of any area containing mechanical piping systems to be heated should be determined. Typically, indoor systems use 10 °C (50 °F) as the minimum ambient and outdoor systems use the minimum temperature established for that geographical location.

Tables A.1 and A.2 and Figs A.1 and A.2 in Appendix A show the typical ranges of operating temperatures, solubility curves, and other pertinent data for the various solutions found in nuclear power generating stations.

4.1.4 Thermal Insulation

The type and thickness of thermal insulation are important in determining the heat loss of the piping system. To determine actual losses for a given set of conditions, a complete thermal insulation specification, including the thermal conductivity K at several mean temperatures, should be consulted. All physical and thermal properties of the specified thermal insulation should be available together with information regarding weather barrier materials.

Copyright © 1987 IEEE All Rights Reserved

Copyright The Institute of Electrical and Electronics Engineers, Inc.
Provided by IHS under license with IEEE
No reproduction or networking permitted without license from IHS Not for Resale

4.1.4.1 Heat Loss Characteristics

The thickness of thermal insulation required to reduce heat transfer and maintain a desired temperature differential between ambient air and the pipe wall should be determined. The *K* factor of thermal insulating materials increases with temperature. When referring to a *K* factor of a thermal insulating material, it is important to note the corresponding mean temperature.

4.1.4.2 Weatherproofing Considerations

Provisions should be made to prevent moisture from entering the thermal insulation. Most thermal insulation materials ace susceptible to moisture absorption (which redices their insulating properties) and should be protected from this by waterproofing or other appropriate methods. Electric heat tracing normally does not have sufficient heat output to dry out wet thermal insulation. Proper operation of an electric heat tracing system depends on the thermal insulation being dry so as to maintain its design insulating characteristics.

4.1.4.3 Thermal Insulation Materials and Application

The most generally used thermal insulation for electric heat tracing systems and their typical maximum service temperatures are:

Type of Material	Typical Maximum Service Temperature
Calcium Silicate	677 °C (1250 °F)
Mineral Wool	677 °C (1250 °F)
Fiberglass	232 °C (450 °F)
Cellular Glass	232 °C (450 °F)

Care should be taken during insulation selection to ensure that the insulation is chemically compatible with the heater cable sheath and pipe. This is particularly true of some insulation materials that may have free chlorides that can cause stress corrosion in stainless steel.

Thermal insulation used on systems located in difficult access or high radiation areas should be designed for quick and easy removal and reinstallation for maintenance.

Some heating cables require oversized thermal insulation to allow for the overall diameter of the pipe and cable(s). Oversized insulation creates an air space, or annulus, between the insulation and the pipe. On vertical piping runs, the air space can allow heat to be convected upwards via the “chimney effect.” This can cause reduced pipe temperatures at lower elevations due to heat loss by convection to the piping at higher elevations. Convection stops may be added on all vertical piping runs to ensure that the “chimney effect” is eliminated or minimized.

Most thermal insulation systems consist of oneor two-piece preformed or molded rigid sections composed of insulant materials covered with a vapor barrier laminate. Jacketing used over thermal insulation for mechanical and weather protection may be sheet aluminum, sheet steel, sheet stainless steel, glass cloth, or polymeric materials.

Heat transfer by convection within the fluidfilled pipe cannot be controlled by the insulation system, but is not usually of any significance on smaller pipe sizes. The electric heat tracing designer should be consulted on maximum vertical rise in a common heating circuit and especially on the location of the temperature sensor used for control. Insulation and heating on outdoor piping should be continued a minimum of 1 m (3.3 ft) inside the buildings where they enter.

Copyright © 1987 IEEE All Rights Reserved

Copyright The Institute of Electrical and Electronics Engineers, Inc.
Provided by IHS under license with IEEE
No reproduction or networking permitted without license from IHS Not for Resale

4.1.5 Redundancy

Redundant electric heat tracing systems, should be applied on critical process control systems, critical freeze, protection systems, and may be considered for process control systems, all from a station reliability, availability, or maintenance standpoint. Redundancy is not normally applied on freeze protection systems, but may be applied d if conditions warrant.

Where redundancy is used, each electric heat tracing section should have a duplicate full capacity set of heaters and controls including sensors. These duplicate sets should be connected to separate and independent power supplies as often as possible (see Fig 3). Only the heater of either the primary or backup system should be in operation at any one time. The controller for the heater not in operation may be energized but with a temperature control set point below the other heater; otherwise, manual transfer of heaters may be necessary when the backup heater is required (see 4.4.7 for switchover considerations).

Each heating circuit should be mounted so that removal and replacement may be accomplished without interrupting service of the adjacent heater. When space allows, the centerlines of the redundant heaters should be located so as to ensure maximum practical clearance so that product ratings are not exceeded.

4.1.6 Instrumentation and Instrument Lines

Primary instrument lines are an important part of any controlled flow piping system. These instrument lines are comparatively small, 0.64 cm, 0.96 cm, and 1.27 cm ($^1/_4$ in, $^3/_8$ in, and $^1/_2$ in) and have little or no flow. The applied heat should be limited so as not to generate a temperature within the lines that will reduce the accuracy or impair the reliability of the instrument, but yet will maintain a temperature equal to the fluid temperature within the associated piping system.

Instrument lines pass through different ambient conditions throughout a run because of the necessity to locate an instrument remotely (for example, outside high radiation areas, in control or instrument rooms, etc). Therefore, an effort should be made to allow for these ambient differences by the selection of different heater outputs or control set points of the heater circuits applied.

Dual pressure sensing lines, such as those associated with flow transmitters, may be heated by one heater in a common mode to ensure identical heating of both legs.

The heating of instrument lines should cover all tubing or pipe leads, associated valves, fittings, strainers, drains, and bypass manifolding and should include the last valve on the line.

The instruments used in conjunction with measuring flow rates, boric acid concentration, or liquid levels should be heated in accordance with the heating requirements of the fluid involved. Instruments can be heated by the direct attachment of heaters or by mounting within a temperature controlled housing. If an instrument generates its own heat, this should be taken into consideration when installing additional heaters. Instrument heating capacity should be determined in accordance with the fluid's minimum allowable temperature and the instrument's maximum allowable temperature. The heater attached to an instrument line should extend a sufficient distance into an enclosure or around an instrument so as not to leave any portion of the flow path unheated.

Pneumatic instrument piping may have freeze protection if the ambient temperature is expected to go to or below freezing and any appreciable moisture vapor is present in the system.

4.1.7 Mechanical Considerations

It is recommended that consideration be given to the distances between parallel pipes or adjacent pipes, or both, to ensure that there is adequate clearance to allow installation of the heating circuit as well as the required thermal insulation. Clearances through wall and floor penetrations should be designed to allow adequate space for the piping, electric heating, and insulation.

Copyright © 1987 IEEE All Rights Reserved

Copyright The Institute of Electrical and Electronics Engineers, Inc.
Provided by IHS under license with IEEE
No reproduction or networking permitted without license from IHS Not for Resale

Efforts should be made to keep heated lines accessible, that is, on the outside of groups and not buried behind other lines.

Valve stems and bonnets should have sufficient length to allow for the thermal insulation thickness not to interfere with the valve operation.

Efforts should be made to evaluate each valve and hanger in order to determine the unique heat sink characteristics of that component, especially if the design is accomplished using system drawings (as opposed to field design). The symbolism displayed on system drawings does not always indicate these considerations. For valves, it is beneficial to account for yoke size and operator size (hand or remote mechanism). For hangers, the intended purpose (reaction and seismic restraints versus support) greatly affects mass and subsequent heat sink effect. Equipment such as pumps, filters, and flow meters have specific heating requirements that should be evaluated. System components, which for reasons of mass, size, or configuration cannot be adequately or conveniently heated with cable, may be equipped with a heated enclosure.

While it is not generally desirable, special conditions may dictate the use of lead as a radiation shield. If used, consideration should be given to metallurgical effects of contact with stainless steel pipe and the heat sink effects of the lead.

4.1.8 Qualification

For station reliability considerations, it is desirable to qualify and document the electric heat tracing systems from a seismic, radiation, environmental, and design life standpoint as follows:

4.1.8.1 Seismic Requirements

Seismic analysis or seismic qualification, or both, should be made for operation after an operating basis earthquake (OBE) for controllers, cabinets, transformers, and supporting hardware associated with electric heat tracing systems. This is of particular concern when these components are used for critical process control, or when such components are located in a seismic category I structure.

4.1.8.2 Radiation Requirements

Materials used in a nuclear radiation environment should be able to withstand the maximum total integrated dose of gamma radiation, as determined for each area, without loss of function through the life of the system. Typical accumulated gamma radiation doses are $1 \cdot 10^6$ to $1 \cdot 10^8$ rads every 40 years.

4.1.8.3 Environmental

Materials used in the electric heat tracing system should be suitable for the environment in which they will operate. Typical environments to be considered are:

1) Indoors or outdoors
2) Minimum and maximum ambient and operating temperatures.
3) Maximum wind velocity
4) Humidity and water spray
5) Dust, salt or other particle laden air
6) Chemical spray
7) Thermal insulation leachable chemicals
8) Hazardous vapors

Copyright © 1987 IEEE All Rights Reserved

Copyright The Institute of Electrical and Electronics Engineers, Inc.
Provided by IHS under license with IEEE
No reproduction or networking permitted without license from IHS Not for Resale

4.1.8.4 Design Life

Design life of components may be equal to the life of the nuclear generating station (40 years). However, if it is determined that a component will not last the life of the station, then an anticipated service life should be identified in order to provide for repair or replacement.

For post-accident sampling systems qualification, see Appendix C.

4.2 Heater Design Considerations

Many factors should be considered when preparing for electric heat tracing designs. More importantly, all of these factors should be taken together, for it is the combination of these factors that will determine whether or not a good design is attained.

4.2.1 Use of Drawings and Models for Design

Drawings are the normal methods used to define and design an electric heat tracing system. The exact combinations of drawings used will vary from one project to the next, but some combinations of these drawings will always be used to describe and define the piping equipment and instrumentation that requires heating.

The person responsible for the heating design should be put on a distribution for all revisions of items and drawings that pertain to the electric heat tracing system. The following documents are commonly used for nuclear projects:

4.2.1.1 Flow Sheets

The flow sheets normally show the flow patterns, system connections, instrumentation, and equipment required for a given mechanical piping system. These sheets should show the association of the heated lines to major pieces of equipment, such as pumps, strainers, filters, and instrumentation, and whether or not those pieces of equipment also require heating.

4.2.1.2 Orthographic Drawings

These drawings should show the physical layout of the piping and equipment to be heated. They should allow for the lines requiring heat to be identified as to location within the mechanical piping system. This may be accomplished in one or more of the following manners:

1) By use of plant coordinates
2) By association with major pieces of equipment
3) By dimensions from either (1) or (2)

The drawings may show the length of lines to be heated by dimensions, by coordinates, or by allowing the use of scaling. Scaling should only be done to estimate and may be confirmed later by field measurement or more detailed drawings.

4.2.1.3 Isometric Drawings

The isometric drawing provides the most information for identifying piping and instrumentation to be heated. The piping isometric drawings should show the piping, hangers, penetrations, etc, where possible, in its final design form. It may be a pipeline erection diagram or a spool drawing, or drawn to reflect the final installed field run piping installation.

Copyright © 1987 IEEE All Rights Reserved

Copyright The Institute of Electrical and Electronics Engineers, Inc.
Provided by IHS under license with IEEE
No reproduction or networking permitted without license from IHS Not for Resale

4.2.1.4 Line List

A line list may be used in lieu of physical drawings to develop the initial heater system design. An example of a typical line list is shown in Table 1. It should be noted that detailed information regarding valves and hangers is not shown on the list. The number of valves in a line may be obtained from the flow sheets, and industry standards may be used for estimating the number of hangers, ff they are not either insulated or seismic hangers.

4.2.1.5 Detail and Equipment Lists

The physical configuration of peripheral piping equipment such as valves, pumps, filters, and strainers varies greatly from one manufacturer to the next. Therefore, it is very important that the correct physical size is used when estimating heat losses and designing the electric heat tracing system.

The different sizes of available valves makes a considerable difference in heat loss on uninsulated surfaces. To check valve characteristics, a valve list can be used. The valve list should include valve numbers, whether flanged or socket welded construction, details if valves are motor operated, and manufacturer's catalog number and outline drawings, if possible.

Equipment list, equipment drawings, and equipment specifications can be used for electric heat tracing design and should contain the following data: dimensional drawings, all equipment requiring heat (that is, pumps, tanks, etc), operating data, and temperature parameters.

4.2.1.6 Models

Models may be used to determine pipe lengths. Due to the use of a single model for plant design, it is recommended that drawings be made from the model and used for detail pipe heating design. The normal method of model use involves the scaling of piping from the model to determine pipe lengths. The model may omit details regarding pipe hangers, and in some cases, valve locations. Flow diagrams and industry standards may be used to estimate the spacing and location of these two items when determining system design.

Cumulative accuracy errors should be considered when using this technique. These involve model accuracy, scale accuracy when measuring piping, and drafting accuracy if a drawing is to be scaled later to determine actual length. If the error is felt to be large enough, a safety factor may be added to all heater lengths. This factor will ensure that adequate heaters and power supplies are available for a maximum length design. Each project model should be checked to determine the minimum line size that will be shown on the model. This will vary from project to project, and the lines not shown on the model should be accounted for by use of line list or drawings as discussed above.

4.2.2 Field Verification of Piping System Design

It is recommended that all piping be fieldverified and a check made of all valves, hangers, restraint locations, and component sizes before final design, manufacture, and installation. Redesign may be necessary if changes are made after the original design.

Copyright © 1987 IEEE All Rights Reserved

Copyright The Institute of Electrical and Electronics Engineers, Inc.
Provided by IHS under license with IEEE
No reproduction or networking permitted without license from IHS Not for Resale

Table 1—Line List

Line No	Size of Line	Type of Line	Length	Min Amb	Heat Trace Maintain Temp	Max Temp	Type Insulation	Insu-lation Thick-ness	Flanged or Welded Valves	Flanged or Welded Pipe	Hang-ers Insu-lated

4.2.3 Factors Affecting Heater System Design

All pertinent factors and conditions of a piping and instrumentation system should be considered during the design stage. These will include mechanical and physical location considerations, unusual startup or shutdown temperature considerations, and any possible abnormal events that the system may be subjected to without expecting a loss of function.

When designing critical process control heater circuits, the flow conditions of the piping and instrumentation should be considered. Care should be taken to keep the flow conditions of the lines associated with any particular heating circuit the same, realizing specific operating conditions may alter the flow patterns, especially at piping tees. For this reason any circuit may extend a limited distance beyond a tee unless no alternate flow path is possible. Similar design practice may be used for process control and freeze protection systems.

In a process control system, such as a caustic fluid line, or in a freeze protection system, it is possible to mix stagnant and moving flow patterns on a single heating circuit. In order to do this, heater output should be in proportion to pipe heat losses for each segment, and sensors should be located on stagnant lines (such as a drain or vent line). Freeze protection systems using pipe sensing control should consider flow conditions only for sensor location. For freeze protection using ambient sensing control systems, flow conditions are not a consideration. However, ambient controllers should not be exposed to the sun or other heat sources.

In general, heat sinks will require extra heat compensation. If additional heat is not supplied, the fluid in or near any heat sink (such as a vane or pipe hanger) will be cooler than the fluid in the rest of the system. This additional heat can be provided by a separate circuit, additional heater length, or a higher watt density from the same heater length in the vicinity of the heat sink. Also, increased thermal insulation can be provided on the object itself, which has the effect of reducing heat loss rather than providing additional heat.

Different valves will have different heat requirements. Diaphragm valves are a special concern because of possible overheating of the diaphragm. VaNe stems cannot be insulated, and an allowance should be made for their heat loss.

Additional consideration should be given to any equipment that acts as a heat sink when inactive but generates heat when in operation (such as a *canned* pump). This equipment will usually require separate heater circuits. Additional consideration should also be given to the upper temperature limits of bearings or seals so as not to cause overheating of such components.

The electric heat tracing should be appropriately sectionalized, taking into account piping redundancy and components that may be removed from the system for maintenance. These maintenance items may include pumps, valves, filters, strainers, and other pieces of hardware. Piping welds may also require periodic inspection. Heaters should not obstruct these welds or should be removable from the weld areas for these inspections. While suction and discharge lines on a pump may be included on the same heating circuit, the heater for the pump should be removable or have the capability of being disconnected from the suction and discharge heaters. This disconnect may be within junction boxes or other suitable disconnect devices. Filters and strainers should be heated in a fashion that allows removal of the filters without dismantling or removing the heating elements. Design and installation of heaters on vanes should allow foI the replacement of packing. System components, which for reason of mass, size, or configuration cannot be adequately or conveniently heated by attachment of electric heaters, may be equipped with a heated enclosure. Design of heater

Copyright © 1987 IEEE All Rights Reserved

Copyright The Institute of Electrical and Electronics Engineers, Inc.
Provided by IHS under license with IEEE
No reproduction or networking permitted without license from IHS
Not for Resale

systems (heater layout, junction box, and control location, etc) should be made to minimize maintenance personnel's exposure to high radiation levels.

The physical layout and installation of the piping and instrumentation system will affect the design of the heater system. Wall and floor penetrations should be oversized to allow adequate space for both the insulation and the heater to pass without the wall acting as a heat sink. If this is not done, considerable design attention will need to be given to the supply of additional heat at these pentrations. When fire seal integrity is required between floors or walls, an approved fire seal should be used on one end of the oversized sleeve. Considerations should be given to the use of separate circuits on defined levels of vertical runs of piping to eliminate any harmful temperature gradients in the pipe. When the piping system is exposed simultaneously to different ambient temperatures, the pipe may be heated with separate heating circuits. When various sizes of piping are covered by the same heater circuit, care should be taken to ensure that all pipe segments are held within the temperature limits of that system. Physical size of piping should be considered when selecting a heater. On outdoor piping systems that enter the ground, heaters should be extended below the frost line for freeze protection systems. Consideration of the underground heat loss environment should be taken into account in this situation.

4.2.4 Heater Circuit Design

The selection of the proper heater to each application will be accomplished by determining the heat losses and then selecting a heater that best suits the need.

The total heat loss requirements of a given heater circuit may be determined by either theoretical calculation (considering conductive loss through insulation, heat sinks, and convective surface losses) or by the use of empirical test data. Consideration should be given to:

1) Maximum heater withstand temperature
2) Use of oversized insulation (if required)
3) Wind factors, as they affect surface heat losses
4) Heat sinks
5) Heatup criteria (when required)
6) Safety factors

Additional information on heat loss calculations is available in ANSI/IEEE Std 515-1983 [5].

The two basic types of heaters normally' in use include series and parallel heaters. A series resistance heater utilizes various alloys to establish a fixed resistance per meter, which in turn determines the wattage output for a specific applied voltage (see Fig 1). The application of the correct amount of heat in a series heater is accomplished by varying either the resistance or the input voltage of the heater, or both.

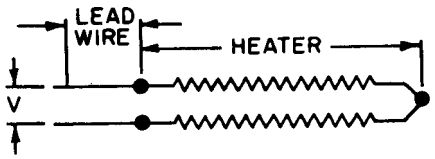

Figure 1—Series Heater

Parallel heaters are heating elements that are connected in parallel, either continuously or in zone. The output (watt density) of the parallel heater per meter is basically unchanged with respect to length (see Fig 2). The application of the correct amount of heat in a parallel heater is accomplished by varying the amount of heat applied per meter of pipe, or in the case of zone heaters, varying the voltage applied to the heater.

 Copyright © 1987 IEEE All Rights Reserved

Copyright The Institute of Electrical and Electronics Engineers, Inc.
Provided by IHS under license with IEEE
No reproduction or networking permitted without license from IHS Not for Resale

The criteria used to select a heater consist of certain general items that are pertinent to all types of heaters and also of some items that are relevant only to series or parallel heaters.

The general criteria include the following:

1) Resistance change with temperature should be considered when selecting heaters.
2) The minimum steady-state design voltage and any appreciable line voltage drops (due to long feeder distances or voltage fluctuations) should be considered before selecting the heater.
3) The heater material's compatibility with its surrounding environment should be considered. An example would be corrosive effects between heater sheath and piping.
4) The maximum sheath temperature should be considered to the extent that any product ratings are not exceeded in the application. Examples would be the overlapping of some heaters and the high temperatures associated with steam blowdown lines.
5) Any derating of heater cables, either desired or required, should be considered. Operating heater cable at reduced voltage will increase the operating life of the cables.

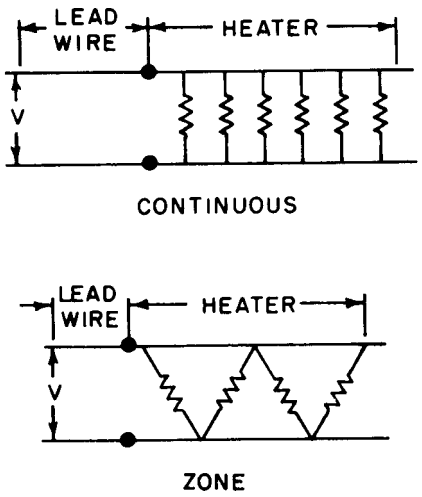

Figure 2—Parallel Heaters

The length of a series heater is determined by the length of the pipe to be heated, plus the length of the heater required to compensate for heat sinks. Once this length is determined, the heat loss or power requirements are used to select the proper heater resistance. If the series circuits are of a short enough length, it may be necessary to use a reduced input voltage to keep from exceeding maximum design wattage requirements.

A parallel heater utilizes two conductive buses running the entire length of the heater. Resistance elements are connected between the two buses either continuously or intermittently. The heating effect occurs across the resistance elements and is essentially independent of the length of the heating strips.

Parallel heaters are designed to be operated at specific voltages. Consideration should be given in heater selection to minimize spiralling requirements. When the heat loss requirements are a multiple of the parallel heater's output, it may be desirable to design multiple heaters. These heaters may be installed in parallel on the pipe rather than spiralling the heater.

The heater power is a function of the electric circuit impedance and applied voltage. The impedance may vary with temperature. Wiring, circuit breakers, etc, should normally be sized using the cold start values.

Copyright © 1987 IEEE All Rights Reserved

Copyright The Institute of Electrical and Electronics Engineers, Inc.
Provided by IHS under license with IEEE
No reproduction or networking permitted without license from IHS Not for Resale

Consideration should be given to releasing piping for heating design on a per system basis. This greatly reduces the confusion created by a pipeby-pipe type of release and design. The number of circuits can be reduced and the best design made when the designer has system visibility.

4.3 Power System Design Considerations

This section covers the recommended power requirements for the proper operation of electric heat tracing systems. It is divided into three parts:

1) *power source*, which covers the available and required power for the system,
2) *distribution transformer*, which briefly outlines some aspects of voltage transformation and location of transformers, and
3) the *heater power distribution system*, which describes some specifics of the actual power connection to the individual electric heat tracing elements.

4.3.1 Power Source

Generally, electric heat tracing systems are supplied with power from the station 600 V ac or 480 V ac three-phase distribution system. Before starting the design of the electric heat tracing system, it is recommended that the voltage levels and the physical location of power sources be determined.

It is the recommendation of this document that electric heat tracing systems not be classified as Class lE systems and that critical process control systems be powered from reliable station power sources. If these reliable power sources are the engineered safety features (ESF) buses, then the electric heat tracing systems should be powered through suitable isolation devices in accordance with ANSI/IEEE Std 308-1980 [3] and ANSI/IEEE Std 384-1981 [4]. The recommendation for not classifying electric heat tracing systems as Class lE is based on station operating criteria in that electric heat tracing systems, even as applied on reactor injection systems, do not perform any emergency functions either during or after a postulated loss-of-coolant accident (LOCA). Instead, electric heat tracing systems render such piping systems operable during normal station operation and thus are not needed during or after a postulated LOCA. For further discussions and technical explanations on normal and accident station operations with respect to non-Class lE heat tracing systems, refer to Appendix B.

An exception to this recommendation is the classification of electric heat tracing systems applied on post-accident sampling systems. Such post-accident sampling systems were mandated by the Nuclear Regulatory Commission as part of the Three Mile Island Unit 2 retrofit program initiated after this standard was first published in 1979. Explanation of these requirements may be found in Appendix C of this document.

Concerning power distribution systems themselves, it is recommended that electric heat tracing systems be powered from 600 V ac or 480 V ac three-phase distribution systems. Each electric heat tracing power distribution and control center can then be fed from its own dedicated transformer with grounded secondary, such as 208Y/120 V ac or 240/120 V ac, which are the normally available voltages for heaters and controls.

The primary source of power should be used during normal operation for redundant electric heat tracing systems. The backup source of power may be energized but with the heater circuit not normally in operation. This may be accomplished by the use of a lower set point on the backup temperature controller or automatic transfer upon loss of the primary source. When possible, separation of the backup power feeders and equipment from the primary system should be maintained. The degree of this separation will vary with the hazards of a particular area, and should comply with general plant standards.

Copyright © 1987 IEEE All Rights Reserved

Copyright The Institute of Electrical and Electronics Engineers, Inc.
Provided by IHS under license with IEEE
No reproduction or networking permitted without license from IHS Not for Resale

4.3.2 Distribution Transformers

The threephase, 60 Hz power supply of 600 V ac or 480 V ac should be reduced, for safety reasons, to the more commonly used electric heat tracing voltages of 240 V ac, 208 V ac, or 120 V ac. This is accomplished by the use of distribution transformers as outlined below:

4.3.2.1 Ratings

The kVA ratings of the distribution transformers should be determined in accordance with the total rated load plus expected spare capacity and number of electric heater distribution panels to be located at a particular load group location.

4.3.2.2 Locations

The distribution transformers should be located at their respective load group locations and should be connected to a convenient 600 V ac or 480 V ac source. Care should be taken to maintain primary and backup systems grouping, if possible.

4.3.2.3 Grounded-Wye Secondaries

The secondary winding of the power transformers used for electric heat tracing should be a grounded wye type.

4.3.3 Heater Power Distribution System

The physical location of the piping system that has to be heated in relation to the power source should be considered when developing the heater power distribution system.

The system should be designed with specific load group locations where distribution transformers, fed with either 600 V ac or 480 V ac, are located with the heater distribution panels. The number of load group locations and panels at each load group will be determined in accordance with the specific requirements of the electric heat tracing system being designed.

For process control and critical process control systems, each heater circuit should be connected to an individual circuit protection device (circuit breaker or fuse) in the heater distribution system. The heater circuit full load current should not be more than 80% of the rating of the circuit protection device. Spare circuit protection capacity should be considered when designing the heater power distribution system.

Circuit protection devices may be mounted in the same enclosure as temperature controllers and alarms, or in their own enclosures. The selection of types of enclosures should be such that they be suitable for their environment and meet all applicable standards. Metallic noncurrentcarrying parts of the electric heat tracing system, such as transformer enclosures, panels, etc, should be connected to the station grounding system. All enclosures should have the specific system identification clearly marked on the outside and the circuit directories should be easily accessible.

The power wiring and termination methods used in electric heat tracing systems should be in accordance with the station and vendor design procedures and requirements.

A typical system one-line diagram is shown in Fig 3.

4.4 Temperature Control Considerations

Temperature controllers are used in conjunction with the electric heat tracing system to regulate the temperature of fluids in pipes and associated equipment. Temperature controllers may be mechanical, electronic, or a combination of both.

Copyright © 1987 IEEE All Rights Reserved

--`,,`-`-`,,`,,`,`,,`---

Copyright The Institute of Electrical and Electronics Engineers, Inc.
Provided by IHS under license with IEEE
No reproduction or networking permitted without license from IHS Not for Resale

4.4.1 Mechanical Controllers

The mechanical controller utilizes the expansion of a fluid within a local bulb or bulb and capillary to actuate electrical contacts through a bellows or a similar coupling device. The bulb and capillary should be of materials suitable for the atmosphere in which they are to be used. Flexible armor that offers mechanical protection for the capillary is recommended. Mechanical controllers are rugged; however, the short sensing element length does not lend them well to grouping or panel mounting. For this reason, mechanical controllers are recommended for freeze protection system control and other ambient sensing uses. Bimetallic types can also be used for ambient sensing applications.

4.4.2 Electronic Controllers

Electronic controllers, using resistive thermal devices (RTDs), thermistors, or thermocouples are capable of being located several hundred meters away from the heated pipes and are often panel-mounted in locations outside high radiation areas for easy maintenance access. These controllers take a sensor signal through an electronic process to switch an electromechanical relay or solid-state device.

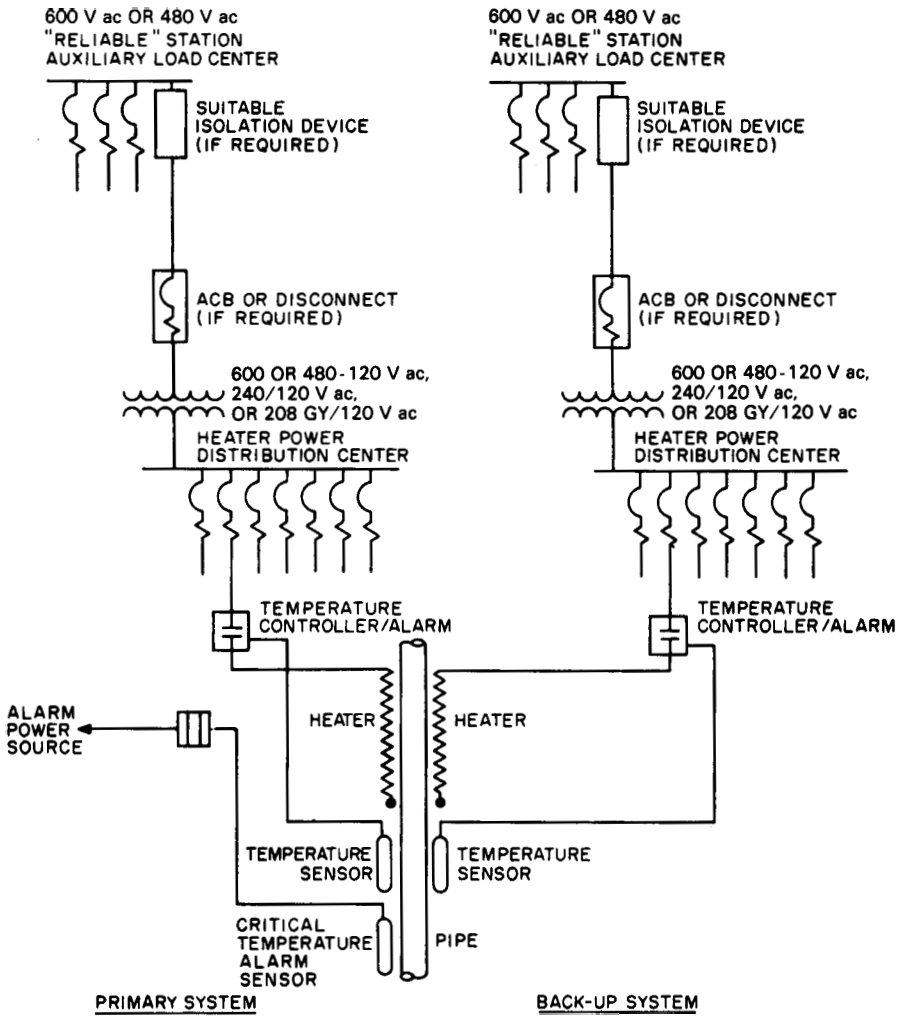

Figure 3—Typical One-Line Diagram of Electric Heat Tracing System (other variations are possible)

Copyright © 1987 IEEE All Rights Reserved

Copyright The Institute of Electrical and Electronics Engineers, Inc.
Provided by IHS under license with IEEE
No reproduction or networking permitted without license from IHS
Not for Resale

Electronic controllers can also be proportional controllers. Electronic controllers are recommended for critical process control and most process control applications.

4.4.3 Locations of Controllers

Where possible, temperature controllers should be located outside of high radiation, congested, or inaccessible areas in order to make them more convenient for calibration and maintenance.

4.4.4 Characteristics of Controllers

Tolerances for temperature controllers are defined as follows:

4.4.4.1 Differential (Dead Band)

This is the difference in degrees between the *off* and the *on* state of the controller. The minimum dead band required should be approximately 2 °C (3.6 °F). The maximum dead band of controllers should be considered when using primary and backup systems to prevent any overlapping of operating ranges, except where required by design.

4.4.4.2 Calibration Tolerance

This is the variation between dial setting and operating point resulting from combined dial accuracy and mechanism movement. Accuracy of controller sensing elements should also be considered.

4.4.4.3 Repeatability

This is the difference in degrees for repeated operation at a specific temperature setting.

4.4.4.4 Resetability

This is the difference in degrees when returning to original temperature setting.

CAUTION — The cumulative effect of controller differential, calibration tolerance, repeatability, and resetability should be considered.

4.4.5 Location of Sensors

The proper location of the temperature sensor on the piping or mechanical equipment is very important to ensure accurate temperature control. The sensor should be positioned at a point that is representative of the design temperature. The following should be considered in relation to the location of the temperature sensors:

1) Where two or more electric heaters meet or join, the sensors for each of these heaters should be mounted 1 to 1.5 m (3.3 to 6 ft) from such areas, if physically possible.
2) If an electric heater circuit includes both piping and any inline heat sinks or heat sources, the sensor should be located on a section of pipe in the system approximately 1 to 1.5 m (3.3 to 6 ft) from any of the inline equipment, if physically possible.
3) The temperature sensors should be located so as to avoid direct temperature effects of the heater it is controlling or any adjacent heater.

4.4.6 Temperature Set Points

The temperature controller set point in the case of a single controller application, or the primary temperature controller set point in the case of a primary and backup application, should be the temperature that is specified for the electric heat tracing system to maintain the piping or mechanical equipment, or both, continuously. In the case of a primary and

Copyright © 1987 IEEE All Rights Reserved

Copyright The Institute of Electrical and Electronics Engineers, Inc.
Provided by IHS under license with IEEE
No reproduction or networking permitted without license from IHS Not for Resale

backup application, the backup controller should be set at a temperature below that of the primary controller set point and should consider controller and alarm accuracy.

4.4.7 Switchover Considerations

In a primary and backup controller application, the transfer from the primary controller to backup controller should be automatic. This means power should be available to both systems continuously, and upon failure of the primary controller, the backup controller would automatically function when the temperature of the piping system reached its set point.

4.4.8 Reduced Voltage Operation

It may become necessary to reduce the operation voltage to electric pipe heating circuits to a level below that which is standard (240 V ac, 208/120 V ac, 120 V ac). In such a case, this can be accomplished by using multitap stepdown transformers, autotransformers, voltage dividers, or adjustable bias control.

4.5 Alarm Considerations

The primary function of an alarm system is to alert operating personnel that the electric heat tracing system may be operating outside its design range and should be checked for possible corrective action. Since the various piping systems requiring electric heating perform different functions, the type and operplexity of the alarm systems will depend upon the critical nature of the piping system and the station operating procedures. The following describes the various alarm systems and their functions.

4.5.1 Circuit Alarms

A circuit continuity alarm can be used to detect loss of current or voltage to each electric heat tracing circuit. These alarms can be designed in a variety of styles and include (but are not limited to) the following:

1) Current sensing devices that monitor the current drawn by the heating circuit and signal an alarm if the current drops below a preset minimum (usually on series-type heating circuits)
2) Voltage continuity alarms that utilize a signal light, relay, or signal generating system at the end of the heating circuit (usually on parallel-type heating systems)
3) Ground leakage alarms that can also be used to detect possible damage to a heat tracing circuit (typically 30 mA ground leakage trip rating).

4.5.2 Temperature Alarms

The following are descriptions of various temperature alarms:

1) *Low-Temperature Alarms.* These indicate that the piping system temperature has fallen below a set minimum. and subsequent cooling may alter the physical or chemical characteristics of the fluid, or both, beyond acceptable operating limits. These alarms can be incorporated with a temperature controller, combined with a hightemperature alarm, or be a separate alarm.
2) *High-Temperature Alarms*. These indicate that the piping system temperature has exceeded a set maximum and sulk sequent heating may alter the physical or chemical characteristics of the fluid, or both, beyond acceptable operating limits. As indicated above, these alarms can be incorporated with a temperature controller, combined with a low-temperature alarm, or be a separate alarm.
3) *Data Logging Systems*. Temperature alarms can also be incorported in data logging equipment.

4.5.3 0ther Available Alarms

Other available alarms include (but are not limited to) the following:

Copyright © 1987 IEEE All Rights Reserved

--`,,`-`-`,,`,,`,`,,`---

Copyright The Institute of Electrical and Electronics Engineers, Inc.
Provided by IHS under license with IEEE
No reproduction or networking permitted without license from IHS Not for Resale

1) *Auxiliary Contact Alarms.* These are used to indicate when a temperature controller or a contactor is closed and power is being supplied to the heating system. They can provide a functional check for the operator to ensure proper operation of the temperature controller or contactor. Typically, auxiliary contact alarms are used on redundant electric heat tracing systems to indicate that the backup system is operating.
2) *Loss-of-Supply-Voltage Alarms.* These are used to indicate a loss of voltage to an electric heat tracing system and typically include a relay that signals an alarm when voltage is lost.

4.5.4 Application of Alarms

Local alarms generally include signals, lights, and relays located at each heater circuit and may or may not be part of the temperature control system.

Centralized alarms may be located in a central area serving several heating circuits. They may be located in a common panel with the temperature controllers or in a separate alarm panel with a separate power source, or in both.

Control room alarms include signals directly from local alarms or centralized alarms to an annunciator, and reflash capability should be considered.

For critical process.control systems including those piping systems with redundant heating, the following alarms are recommended:

1) Low temperature alarm or critical temperature alarm, or both (minimum acceptable temperature of system)
2) High temperature alarm (if the maximum high temperature is detrimental to the piping system under any operating condition)
3) Indicating alarm to alert personnel that the back-up heating system is energized or is being called for
4) An alarm indicating loss of voltage to the heating control system
5) A means for testing alarm circuitry

Also, with redundant electric heat tracing systems that utilize redundant alarms, the low alarm for the primary system is typically set at a temperature midway between the primary system temperature control set point and the backup system temperature control set point. The low alarm for the backup system is typically set at 3 to 6 °C (5 to 11 °F) below the back-up system temperature set point.

4.5.5 Location of Alarm Temperature Sensors

Alarm temperature sensors should be located to indicate the anticipated worst-case condition. (See ANSI/IEEE Std 622A-1984 [6]).

4.5.6 Alarm Power Source

Depending on the need for separation from the control system, the alarm power source may be separate from the temperature control source or be powered from the same source. On critical process control systems, the control and the critical temperature alarm power sources should be separate.

4.5.7 Startup Considerations

During a startup condition, consideration should be given for acknowledgement of alarms until the system is brought up to temperature.

Copyright © 1987 IEEE All Rights Reserved

--`,,`-`-`,,`,,`,`,,`---
Copyright The Institute of Electrical and Electronics Engineers, Inc.
Provided by IHS under license with IEEE
No reproduction or networking permitted without license from IHS Not for Resale

4.6 Finished Drawings and Documents

Drawings and documents should be prepared for the installation of a nuclear power generation station electric heat tracing system. The following is a partial listing of the various types of drawings and documents required to design and install:

1) System specifications requiring electrical heat tracing
2) System flow diagrams
3) Station equipment layout drawings (plans, section, etc)
4) Pipe drawings (plans, isometrics, line lists, etc)
5) Piping specifications
6) Thermal insulation and weatherproofing specifications
7) Equipment specifications (pumps, valves, strainers, etc)
8) Electrical drawings (one-lines, elementaries, etc)
9) Electric heat tracing design and calculations
10) Electric heat tracing drawings
11) Bill of materials
12) Electrical equipment specifications
13) Installation details
14) Equipment installation and instruction manuals

4.6.1 Heater System Layout and Circuit Drawings

Each heater circuit may be shown on a drawing depicting its physical location and all the relevant data for that heater and circuit including the following:

1) Circuit number
2) Piping system designation
3) Piping location arid line number or designation
4) Heater characteristics such as:
    a) Catalog number
    b) Length
    c) Resistance
    d) Voltage
    e) Current
    f) Watts and watts/meter
    g) Power distribution panel number or designation
    h) Alarm system assignment and set points

4.6.2 Equipment Installation and Instruction Manuals

Installation manuals should be prepared for the electric heat tracing system. These manuals should have sufficient detail and be supplemented by installation detail drawings where necessary to enable the field construction personnel to install the heat tracing system without damaging any components and with as little field modification as possible. Equipment and material manufacturer's assistance should be obtained during the preparation of the installation procedures. Instruction manuals should be obtained from all the electric heat tracing equipment and material manufacturers as applicable. These manuals should be prepared for the specific project and should not be a general pamphlet.

4.7 Test Considerations

Consideration should be given in the design of electric heat tracing systems for permanent sensor installations on the piping for the purpose of periodic testing of system performance. The test sensors can be periodically spaced along the

 Copyright © 1987 IEEE All Rights Reserved

Copyright The Institute of Electrical and Electronics Engineers, Inc.
Provided by IHS under license with IEEE
No reproduction or networking permitted without license from IHS Not for Resale

piping and their leads brought out through the thermal insulation to a suitable junction point. Penetration of the thermal insulation should be sealed and weatherproofed to prevent moisture entry. The location of the test sensors on the pipe should be shown on the circuit drawings.

5. Installation of Electric Heat Tracing Systems

Proper installation of equipment is the ultimate determining factor in the successful service life of an electric heat tracing system. This section provides guidelines for ensuring proper installation.

5.1 Distribution and Use of Drawings at the Installation Site

It is desirable to have the heater layout and circuit drawings distributed to all onsite discipline groups (that is, piping, insulation, electrical instrumentation, and controls) with adequate time prior to installation of the electric heat tracing system to ensure compatability between mechanical piping system design and *as-built* conditions. Continuous monitoring of the piping design and construction is prudent to permit early discovery of conflicting conditions created by system engineering changes. The installation drawings should be verified to depict the required circuit per given length of pipe considering all extraneous heat sinks. Deviations from the electric heat tracing system installation drawings should be documented before thermal insulation is applied. It is imperative that the as-built conditions of the electric heat tracing system are closely monitored and accurately recorded on a permanent record document for turnover to the operating station staff. Appropriate information on asbuilt documents are items such as actual circuit lengths, starting and ending points, location of sensors, and power sources for each circuit.

5.2 Receiving of Materials

Upon receipt of components and equipment associated with the electric heat tracing system it is recommended that a standard inspection procedure be implemented (see ANSI/ASME NQA-2-1986 [1], Part 2.2). Where applicable, this procedure should include verification of required lengths of heating elements, receipt of adequate documentation, and a continuity and insulation resistance check (megger). It is advisable to store materials in accordance with ANSI/ ASME NQA-2-1986 [1], Part 2.2, level B.

5.3 Installation of Materials

Installation of electric heat tracing materials should be in accordance with manufacturer's recommendations and should consider the following:

5.3.1 Scheduling of Installation

For the protection of the electric heaters and components, installation of the electric heat tracing system may be delayed until completion of bulk construction and cleanup of the mechanical piping to which it is applied. This does not include the running of raceway, the construction of support framing, or the installation of power sources. Installation of the heat tracing system can commence after the piping system hydrostatic test and prior to or during mechanical system preoperational testing, providing that these tests do not require thermal insulation to be in place. Installation of thermal insulation should be delayed until the completion of the electric heat tracing system tests outlined below and the installation of any test temperature sensors.

5.3.2 Testing of Materials

Before installation, the following should be performed:

Copyright © 1987 IEEE All Rights Reserved

Copyright The Institute of Electrical and Electronics Engineers, Inc.
Provided by IHS under license with IEEE
No reproduction or networking permitted without license from IHS Not for Resale

1) A visual inspection of the heating elements and sensing devices to ensure that they are not damaged as a result of handling and storage,
2) A continuity and insulation resistance check of the heating element, where appropriate, and
3) Operational checks of individual control or alarm sensing devices, or both, where applicable.

After installation, a continuity and insulation resistance check should be performed to ensure that the equipment remains functional following installation. These tests should also be repeated after installing thermal insulation.

5.3.3 Handling of Materials During Installation

If a pipe/mechanical component cleaning program is to be initiated, it should commence prior to installation of the heat tracing system on stainless steel process equipment. Standard accepted electrical construction practice is sufficient to ensure physical integrity of the equipment. Strapping should be applied in strict accordance with the manufacturer's installation instructions. Halide content of strapping material should be considered when it is applied on stainless steel mechanical equipment.

Individual identification tags may be attached to each heater circuit at the lead wire point.

5.3.4 Protection of Materials After Installation and Before Thermal Insulation of the System

If a considerable time lapse is anticipated between the installation of the electric heat tracing system and the subsequent installation of thermal insulation, the use of temporary protective covering on stainless steel equipment should be considered. However, the application of the protective covering is not meant to impede any inspections of the electric heat tracing system or the mechanical piping system to which it is applied.

5.3.5 Installation of Temperature Controls

Controllers and sensors should be installed with accessibility for maintenance and calibration considered. Sensor locations on mechanical piping systems should be verified with respect to design documents. The sensor location may be recorded at installation on a permanent document that is to be turned over to the operating station staff.

5.3.6 Installation of Thermal Insulation

Care should be taken when installing thermal insulation over electric heaters, sensors, etc, so that the components will not be damaged. It is recommended that durable warning tags or markings be applied to thermal insulation that covers electric heat tracing systems.

Insulated piping should be provided with a bridge in those areas subject to pedestrian traffic in order to prevent damage not only to the heater but also to the insulation, which can increase heat loss.

5.4 Startup Testing for Critical Process Control Systems

5.4.1 Power Systems Operation Test

It is appropriate to measure voltage and current on each circuit and to record these measurements at least twice during the testing program. The first measurements should be taken after installation is complete to verify that the design criteria are satisfied. The secord measurement is for documentation during the formal testing program and will serve as baseline data for each circuit.

5.4.2 Temperature Tests

As a test means of measuring temperature, the installation of testthermocouples, thermistors, or RTD sensors is recommended on critical process control systems prior to the installation of thermal insulation. This permits flexibility

Copyright © 1987 IEEE All Rights Reserved

Copyright The Institute of Electrical and Electronics Engineers, Inc.
Provided by IHS under license with IEEE
No reproduction or networking permitted without license from IHS Not for Resale

in the selection of areas for investigation of heat sinks or hot spots and verification of overall system temperatures. It further allows for repetition of testing to identify possible temperature trends.

Also, on critical process control systems, temperature data should be obtained from recirculation fluid tests. A testing of this nature assesses the impact of the electric tracing system on the performance of equipment such as pumps and valves.

5.4.3 Record Keeping of Tests

All data, tests, and test results review information is extremely valuable as baseline data. This information should be compiled and maintained in a permanent manner for the operating station staff.

5.4.4 Troubleshooting and Repair

There are three basic trouble areas which can be anticipated during startulp testing of electric heat tracing systems:

5.4.4.1 Excessive Heat

If the presence of excessive heat is discovered during testing and the proper location of temperature sensing devices is verified, a design review should be conducted. It is possible that either a system is incorrectly or overdesigned or does not consider heat input from sources such as pumps and immersion heaters or vertical pipes, that is, a chimney effect.

5.4.4.2 Insufficient Heat

If insufficient temperatures are experienced and the proper location of temperature sensing devices is verified, again, a design review should be considered. Lower temperatures indicate the possibility of an unanticipated heat sink, insufficient thermal insulation, or chimney effect.

5.4.4.3 Nonfunctioning Circuit or Controls, or Both

For nonfunctioning equipment, the manufacturer's troubleshooting methods should be followed.

5.4.5 Turnover of System to Operating Station Including Final Checkout of As-Built Drawings

Documentation may be compiled on a per circuit basis for final turnover. This information includes verified as-built drawings and test results. A composite process system print, such as a flow diagram showing the location of each circuit, is valuable during operation as an aid to resolving alarm conditions as well as assisting in the maintenance of equipment.

6. Maintenance of Electric Heat Tracing Systems

The proper maintenance of any electrical system is vital to the reliable operation of a nuclear generating station. This section briefly outlines recommended maintenance practices for electric heat tracing systems.

6.1 Record Keeping

Records for the electric heat tracing system may be inserted and maintained as an integral part of the operating station's machinery history. It is prudent to include preoperational test results as baseline data.

Copyright © 1987 IEEE All Rights Reserved

Copyright The Institute of Electrical and Electronics Engineers, Inc.
Provided by IHS under license with IEEE
No reproduction or networking permitted without license from IHS Not for Resale

6.2 Heater, Alarm, and Temperature Controller Circuit Checks

Circuit checks should be performed as established by the operating station surveillance program an d in accordance with the manufacturer's recommendations.

6.3 Inspections

It is recommended that any required inspections be carried out during scheduled station outages and when the process system is not required to support station operations.

6.4 Periodic Testing

Periodic testing should be performed as established by the operating station surveillance program and in accordance with the manufacturer's recommendations. The results of these tests should be evaluated against the baseline data obtained in startup testing in order to determine system trends in temperature. Periodic interchanging of primary and backup circuits should be considered to evenly distribute service time.

--`,,`-`-`,,`,,`,`,,`---

Copyright © 1987 IEEE All Rights Reserved

Copyright The Institute of Electrical and Electronics Engineers, Inc.
Provided by IHS under license with IEEE
No reproduction or networking permitted without license from IHS

Not for Resale

Annex A Temperature and Solubility Tables of Borated Water, Caustic Soda, and Sodium Pentaborate Systems

(Informative)

Table A.1—Typical Temperature Parameters for Boric Acid

Concentration Weight (%)		2	4	6	8	10	12	15
Crystallization temperature	C	0	13	27	38	49	57	66
	F	32	55	80	100	120	135	150
Operation range	C	13–18	27–32	41–46	52–57	63–68	71–77	70–85
	F	55–65	80–90	105–115	125–135	145–155	160–170	175–185
Minimum acceptable temperature	C	10	24	38	49	60	66	71
	F	50	75	100	120	140	150	160
Maximum acceptable temperature	C	88	88	88	88	88	88	88
	F	190	190	190	190	190	190	190
Boiling	C	100	100.3	100.5	100.8	101	101.3	101.7
	F	212	212.5	213	213.5	214	214.4	215

NOTE — All alarms can vary according to operating and design conditions.

Table A.2—Typical Temperature Parameters for Sodium Hydroxide (Caustic Soda)

Concentration Weight (%)	Crystallization Temperature °C	°F
5	–4	25
10	–10	14
20	–26	–15
30	+1	34
40	15	59
50	12	54
55	32	90

Copyright © 1987 IEEE All Rights Reserved

Copyright The Institute of Electrical and Electronics Engineers, Inc.
Provided by IHS under license with IEEE
No reproduction or networking permitted without license from IHS
Not for Resale

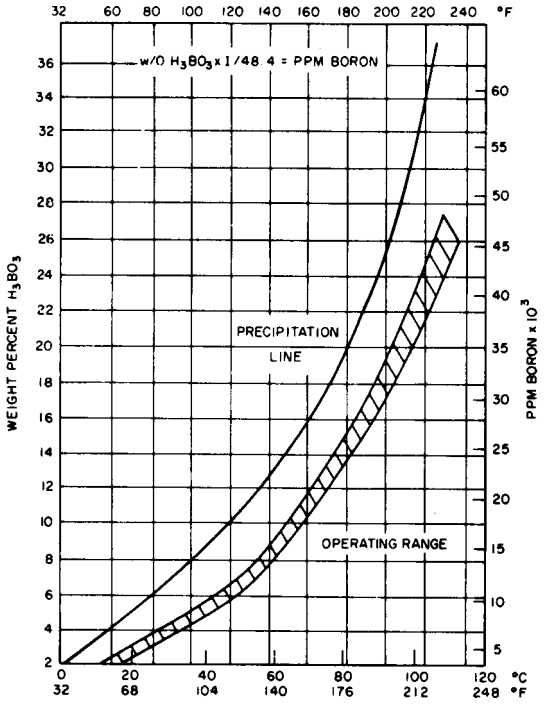

Figure A.1—Boric Acid Solubility Curve

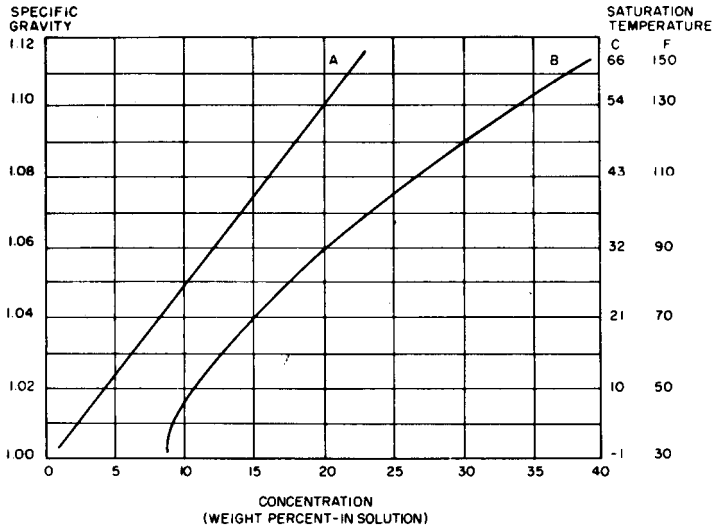

A = specific gravity $Na_2B_{10}O_{16}$ 10 H_2O @ 80 °F versus concentration.
B = saturation temperature versus concentration.

Figure A.2—Sodium Pentaborate Solubility Curve

Copyright © 1987 IEEE All Rights Reserved

Copyright The Institute of Electrical and Electronics Engineers, Inc.
Provided by IHS under license with IEEE
No reproduction or networking permitted without license from IHS
Not for Resale

Annex B The Function of Electric Heat Tracing Systems Required to Support Engineered Safety Features Piping Systems (Informative)

B.1 Introduction

B.1.1 Purpose

The purpose of this Appendix is to discuss the functioning of electric heat tracing systems in support of the engineered safety features (ESF) piping systems to which they are applied. The objective of this Appendix is to clarify the position as follows: Although it is highly desirable to have reliable power sources, such as ESF power buses for electric heat tracing systems, a requirement of classifying electric heat tracing systems as Class lE is not warranted.

The thrust of this Appendix is directed to engineered safety features piping systems containing greater than ten weight percent H_3BO_3 (borated water) as opposed to systems containing four weight percent or less H_3BO_3. This is appropriate because the precipitation temperature of boric acid at higher concentrations is more restrictive (see Fig A.1 in Appendix A) than when the electric heat tracing system is used as a freeze protection system.

B.1.2 The Nuclear Power Generating Station

The one discussed in this Appendix is a pressurized water reactor (PWR) utilizing a four weight percent boric acid storage system and a twelve weight percent boron injection tank (BIT). Earlier generation PWRs have twelve weight percent boric acid storage but this does not affect the intent of this discussion. The operation of the boiling water reactor (BWR) standby liquid control system was investigated with respect to this Appendix and was found to be less restrictive in operation than its counterpart, the safety injection system in PWRs, due to lower concentrations of H_3BO_3.

B.1.3 Modes of Reactor Operation

There are six modes of reactor operation. These are listed in Table B.1. These modes are significant to this discussion when considering the postulated accident conditions and the technical specification requirements. It should be noted that postulated accident conditions can only be associated with modes 1 and 2, and resultant action goes to mode 3 with subsequent action to mode 4.

B.2 Postulated Conditions

The following general postulated conditions are developed in this discussion:

1) Loss of off-site and station ac power
2) Loss-of-coolant accident (LOCA)
3) Simultaneous loss of off-site and station ac power and LOCA
4) Unidentified leakage of insufficient magnitude to cause ESF actuation

B.2.1 Loss of Off-Site and Station AC Power

Assume the station is operating in mode 1: power operation (see Table B.1). For reasons not covered here, the station sustains a complete loss of ac power. The following automatic engineered safety features actions occur:

1) The station goes to mode 3: hot standby.
2) All ESF power buses are stripped.

Copyright © 1987 IEEE All Rights Reserved

Copyright The Institute of Electrical and Electronics Engineers, Inc.
Provided by IHS under license with IEEE
No reproduction or networking permitted without license from IHS Not for Resale

3) The emergency diesel generators autostart.
4) Automatic sequencing and standby of engineered safety features equipment commence.

At this time the electric heat tracing systems may be de-energized as a result of the ESF buses being stripped. However, the station is in mode 3 due to loss of power. After the initial operator lockout, administratively or automatically, one of two actions can occur. Either the electric heat tracing systems can be restored or the station can be cooled to mode 4. In neither case are the technical specifications for the boron injection tank or the electric heat tracing system violated (see Section B3).

Table B.1—Station Operational Modes

Mode	Reactivity Condition, K_{eff}	Rated Thermal Power* (%)	Average Coolant Temperature
1. POWER OPERATION	≥0.99	>5	≥350 °F
2. STARTUP	≥0.99	≤5	≥350 °F
3. HOT STANDBY	<0.99	0	≥350 °F
4. HOT SHUTDOWN	<0.99	0	350 °F >T_{avg} >200 °F
5. COLD SHUTDOWN	<0.99	0	≤200 °F
6. REFUELING †	≤0.95	0	≤140 °F

*Excluding decay heat.
††Reactor vessel head unbolted or removed and fuel in the vessel.

B.2.2 Loss-of-Coolant Accident (LOCA)

The station is operating in mode 1: power operation. An ESF signal is received indicating a LOCA.

1) The station goes to mode 3: hot standby.
2) The emergency diesel generators autostart and go into standby; that is, the generator breakers do not close in on the ESF buses.
3) Nonessential loads are stripped as ESF equipment sequences and safety injection are initiated.

At this time the electric heat tracing systems are de-energized as a result of the ESF buses stripping nonessential loads. However, the twelve weight percent boric acid is no longer in the BIT, having been introduced into the reactor during safety injection.

B.2.3 Simultaneous Loss of Off-Site and Station AC Power and LOCA

The station is operating in mode 1: power operation. An ESF signal is received simultaneously with a station loss of ac power.

1) The station goes to mode 3: hot standby.
2) All ESF buses are stripped.
3) The emergency diesel generators autostart and assume the ESF load as equipment is sequenced into operation.
4) Safety injection is initiated.

At this time the electric heat tracing systems are de-energized as a result of the ESF buses being stripped. However, as in B.2.2, the twelve weight percent boric acid is no longer in the BIT.

Copyright © 1987 IEEE All Rights Reserved

Copyright The Institute of Electrical and Electronics Engineers, Inc.
Provided by IHS under license with IEEE
No reproduction or networking permitted without license from IHS Not for Resale

B.2.4 Unidentified Leakage of Insufficient Magnitude to Cause ESF Actuation

An unidentified leak is defined as leakage (except for steam generator tube leakage) through a nonisolable fault in a reactor coolant system component body, pipe wall, or vessel wall. For an unidentified leak of insufficient magnitude to cause ESF actuation, the condition is evidenced by increased charging flow and decreasing pressurizer level or leak detection systems, or both. Technical specifications permit no pressure boundary leakage and 1 gal/min unidentified leakage. Therefore, operator action as directed by technical specifications requires going to mode 3, hot standby, within 6 hours and to mode 5, cold shutdown, within the following 30 hours. Providing that the charging pumps can maintain pressurizer level, it is not required to initiate the ESF. During the allotted 6 hours for achieving mode 3, the electric heat tracing is required to maintain the critical process control system. However, its reliability requirements, as provided in 4.1.8, are not different from normal operation.

As illustrated by these four examples, the general technical specifications in Section B3, and Table B 1, the electric heat tracing systems successfully perform their function up until the instant of the postulated accident. Following this instant and subsequent evolutions, these and other electric pipe and instrumentation heating systems may be satisfactorily restored by utilizing the station operating procedures at the discretion of the operating personnel.

B.3 General Industry Technical Specifications

B.3.1 Emergency Core Cooling Systems: Heat Tracing

B.3.1.1 Limiting Condition for Operation

At least two independent channels of heat tracing shall be OPERABLE for the BIT and for the heat traced portions of the associated flow paths.

B.3.1.2 Applicability

Modes 1, 2, and 3.

B.3.1.3 Action

With only one channel of heat tracing on either the BIT or on the heat traced portion of an associated flow path OPERABLE, operation may continue for up to 30 days provided the tank and flow path temperatures are verified to be ≥145 °F at least once per 8 hours, otherwise, to be in HOT SHUTDOWN within 12 hours.

B.3.1.4 Surveillance Requirements

Each heat tracing channel for the boron injection tank and associated flow path shall be demonstrated OPERABLE:

1) At least once per 31 days by energizing each heat tracing channel.
2) At least once per 24 hours by verifying the tank and flow path temperature to be ≥ 145 °F. The tank temperature shah be determined by measurement. The flow path temperature shall be determined by either measurement or recirculation flow until establishment of equilibrium temperatures within the tank.

B.3.2 Emergency Core Cooling Systems: Boron Injection System and BIT

B.3.2.1 Limiting Condition for Operation

The boron injection tank shall be OPERABLE with:

1) A minimum contained volume of 900 gallons of borated water[5]

[5]Values for illustrative purposes only.

Copyright © 1987 IEEE All Rights Reserved

Copyright The Institute of Electrical and Electronics Engineers, Inc.
Provided by IHS under license with IEEE
No reproduction or networking permitted without license from IHS Not for Resale

2) Between 20 100 and 21 800 ppm of boron[5]
3) A minimum solution temperature of 145 °F

B.3.2.2 Applicability: Modes 1, 2, and 3

B.3.2.3 Action

With the BIT inoperable, restore the tank to OPERABLE status within 1 hour or be in hot standby and borated to a SHUTDOWN MARGIN equivalent to 1% (Δk)/k at 200 °F within the next 6 hours; restore the tank to OPERABLE status within the next 7 days or be in HOT SHUTDOWN within the next 12 hours.

B.3.2.4 Surveillance Requirements

The BIT shall be demonstrated OPERABLE by:

1) Verifying the water level at least once per 7 days
2) Verifying the boron concentration of the water in the tank at least once per 7 days
3) Verifying the water temperature at least once per 24 hours

Copyright © 1987 IEEE All Rights Reserved

Copyright The Institute of Electrical and Electronics Engineers, Inc.
Provided by IHS under license with IEEE
No reproduction or networking permitted without license from IHS Not for Resale

Annex C Electric Heat Tracing Requirements for Post-Accident Sampling Systems in Nuclear Power Generating Stations

(Informative)

C.1 Introduction

The purpose of this Appendix is to examine the post-accident sampling systems that may require electric heat tracing and the directives that are applicable to both licensed and to-be-licensed stations. Information on the electric heat tracing applications and referenced Nuclear Regulatory Commission (NRC) qualification requirements for these systems are presented.

As a result of the Three Mile Island (TMI) Unit 2 incident in March, 1979, additional post-accident sampling of reactor coolant and containment atmospheres have been mandated by the NRC. Some of the analyzer equipment, particularly sample lines, require electric heat tracing to prevent the formation of condensates in the lines due to temperatures falling below the gas sample dew point. The temperature of the containment atmosphere during postulated accident scenarios is typically between 120–177 °C (250–350 °F). The post-accident hydrogen and containment radiation sampling systems are Category I, as defined in USNRC RG No 1.97 [C2], and may require the lines to the analyzer and monitor to be Class lE electric heat tracing installations.

While sampling data may be obtained by other means, such as compensation charts, air dryers, or analyzers and monitors in close proximity to the source, this appendix discusses the use of electric heat tracing when required on sample lines.

C.2 Regulations

Nuclear stations licensed before January 1, 1982, were mandated by NUREG-0737 [C1] to implement sampling capabilities. In general, NUREG-0737 [C1] delineates requirements for licensed stations but also invokes USNRC RG No 1.97 [C2] which is the guideline for to-belicensed stations. Stations to be licensed after January 1, 1982, should have all design modifications completed before receiving the license, which includes meeting the provisions of USNRC RG No 1.97 [C2].

The first edition of this standard, published in 1979, recommended that electric heat tracing equipment not be classified as Class lE equipment, even when used on Category I systems and monitors. The basis for this recommendation was that the electric heat tracing system installations described within that document were neither required for the safe shutdown of an operating reactor nor required to continue in operation after a postulated loss-of-coolant accident (LOCA). Shortly after the publication of the 1979 edition of this standard, the incident at TMI Unit 2 occurred an J the subsequent NRC regulations were issued.

The electric heat tracing circuit on the instrument sample lines and the associated instrument are powered from the same supply source. As stated in NUREG-0737 [C1], the instrumentation should be powered from the station Class lE power source. In order to meet the functional requirements, the electric heat tracing system should also be powered from the station Class lE power source. Furthermore, by the very nature of this electric heat tracing application, the system is required to be operational after a postulated LOCA. This was outside the scope of the first edition of this standard because such heating applications had not been identified prior to the TMI Unit 2 incident.

C.3 Electric Heat Tracing System

Some manufacturers of analyzers recommend, and in many cases require, that the instrument sample tubing be heated to prevent condensates from collecting. This would not only prevent any alteration of the state of the gas sample (that

Copyright © 1987 IEEE All Rights Reserved

--`,,-`-`,,`,,`,`,,`---
Copyright The Institute of Electrical and Electronics Engineers, Inc.
Provided by IHS under license with IEEE
No reproduction or networking permitted without license from IHS Not for Resale

is, plate-out of radioiodine), but would also prevent the drainage of water from the sample lines into the instrument itself. In general, any gaseous effluent discharge monitor that requires piping from the collection source, such as vents or containments, may require the lines to be heated. The actual design is site-specific, which takes operating and ambient temperatures, physical location of input lines and analyzer, and operations requirements into consideration.

C.4 References

[C1] NUREG-0737, Clarification of TMI Action Plan Requirements. United States Nuclear Regulatory Commission (USNRC), Nov 1980, Clarification Items II.B.3 and II.F.1, Attachment 6.[6]

USNRC (including NUREG) publications are available from the Superintendent of Documents, US Government Printing Office, PO Box 37082, Washington, DC 20013-7082.

[C2] USNRC RG (Regulatory Guide) No 1.97, Instrumentation for Light-Water-Cooled Nuclear Power Plants to Assess Plant and Environs Conditions During and Following an Accident, Revision 2, Dec 1980, Tables1 and 2 and Regulatory Position C. 1.3.

C.5 Bibliography

ANSI/ANS 4.5-1980 (R 1986), Criteria for Accident Monitoring Functions in Light Water-Cooled Reactors.

NUREG-0578, TMI-2 Lessons Learned, Task Force Status Report and Short-Term Recommendations, USNRC, Aug 1979.

NUREG-0660, NRC Action Plan Developed as a Result of the TMI-2 Accident, USNRC, Revision 1, Aug 1980.

USNRC RG No 1.89, Environmental Qualifications of Certain Electric Equipment Important to Safety for Nuclear Power Plants, Revision 1, June 1984.

[6]USNRC (including NUREG) publications are available from the Superintendent of Documents, US Government Printing Office, PO Box 37082, Washington, DC 20013-7082.

Copyright © 1987 IEEE All Rights Reserved

Copyright The Institute of Electrical and Electronics Engineers, Inc.
Provided by IHS under license with IEEE
No reproduction or networking permitted without license from IHS
Not for Resale