IEEE Std 62™-1995 (R2005)
(Revision of IEEE Std 62-1978)

IEEE Guide for Diagnostic Field Testing of Electric Power Apparatus-Part 1: Oil Filled Power Transformers, Regulators, and Reactors

Sponsor

Power System Instrumentation and Measurements Committee
of the
IEEE Power Engineering Society

Reaffirmed 20 March 2005
Approved 16 March 1995

IEEE-SA Standards Board

Abstract: Diagnostic tests and measurements that are performed in the field on oil-immersed power transformers and regulators are described. Whenever possible, shunt reactors are treated in a similar manner to transformers. Tests are presented systematically in categories depending on the subsystem of the unit being examined. A diagnostic chart is included as an aid to identify the various subsystems. Additional information is provided regarding specialized test and measuring techniques.
Keywords: Oil filled transformers, regulators, reactors, diagnostic evaluation, off-line testing, field testing, windings, bushings, insulating fluids, tapchangers, core, tanks, safety.

The Institute of Electrical and Electronics Engineers, Inc.
3 Park Avenue, New York, NY 10016-5997, USA

Copyright © 2005 by the Institute of Electrical and Electronics Engineers, Inc.
All rights reserved. Published 1995. Printed in the United States of America.

IEEE is a registered trademark in the U.S. Patent & Trademark Office, owned by the Institute of Electrical and Electronics Engineers, Incorporated.

ISBN 1-55937-529-9

No part of this publication may be reproduced in any form, in an electronic retrieval system or otherwise, without the prior written permission of the publisher.

Copyright The Institute of Electrical and Electronics Engineers, Inc.
Provided by IHS under license with IEEE
No reproduction or networking permitted without license from IHS
Not for Resale

IEEE Standards documents are developed within the Technical Committees of the IEEE Societies and the Standards Coordinating Committees of the IEEE Standards Board. Members of the committees serve voluntarily and without compensation. They are not necessarily members of the Institute. The standards developed within IEEE represent a consensus of the broad expertise on the subject within the Institute as well as those activities outside of IEEE that have expressed an interest in participating in the development of the standard.

Use of an IEEE Standard is wholly voluntary. The existence of an IEEE Standard does not imply that there are no other ways to produce, test, measure, purchase, market, or provide other goods and services related to the scope of the IEEE Standard. Furthermore, the viewpoint expressed at the time a standard is approved and issued is subject to change brought about through developments in the state of the art and comments received from users of the standard. Every IEEE Standard is subjected to review at least every five years for revision or reaffirmation. When a document is more than five years old and has not been reaffirmed, it is reasonable to conclude that its contents, although still of some value, do not wholly reflect the present state of the art. Users are cautioned to check to determine that they have the latest edition of any IEEE Standard.

Comments for revision of IEEE Standards are welcome from any interested party, regardless of membership affiliation with IEEE. Suggestions for changes in documents should be in the form of a proposed change of text, together with appropriate supporting comments.

Interpretations: Occasionally questions may arise regarding the meaning of portions of standards as they relate to specific applications. When the need for interpretations is brought to the attention of IEEE, the Institute will initiate action to prepare appropriate responses. Since IEEE Standards represent a consensus of all concerned interests, it is important to ensure that any interpretation has also received the concurrence of a balance of interests. For this reason IEEE and the members of its technical committees are not able to provide an instant response to interpretation requests except in those cases where the matter has previously received formal consideration.

Comments on standards and requests for interpretations should be addressed to:

Secretary, IEEE Standards Board
445 Hoes Lane
P.O. Box 1331
Piscataway, NJ 08855-1331
USA

IEEE Standards documents may involve the use of patented technology. Their approval by the Institute of Electrical and Electronics Engineers does not mean that using such technology for the purpose of conforming to such standards is authorized by the patent owner. It is the obligation of the user of such technology to obtain all necessary permissions.

--`,,`,,`,,,-`-`,,`,,`,`,,`---
Copyright The Institute of Electrical and Electronics Engineers, Inc.
Provided by IHS under license with IEEE
No reproduction or networking permitted without license from IHS
Not for Resale

Introduction

(This introduction is not a part of IEEE Std 62-1995, IEEE Guide for Diagnostic Field Testing of Electric Power Apparatus.)

The condition of power apparatus is of prime importance for the successful operation of a power system. During transportation, installation, and service operation, the apparatus may be exposed to conditions that adversely affect its reliability and useful life. One of the principal aims of the maintenance engineer is to detect defects at an early stage and take appropriate corrective measures. The detection is usually achieved by means of diagnostic evaluation in the field that is performed at regular intervals as necessary. This guide describes most of the diagnostic procedures and measurements that are common practice and provides additional information in the case of more specialized techniques. Each test has an interpretation section that is provided, not to establish a standard, but merely to guide the user. There is not necessarily any direct relationship between these field tests and factory tests. For tests performed within the warranty period, the measurements should agree with the manufacturer's data when performed under similar conditions. When measurements are performed outside the warranty period on service-aged equipment, there may be some deviation between field and factory data. Interpretation of measured results is usually based on a comparison with data obtained previously on the same unit or by comparison with similar units. Many of the levels specified in this guide are not standardized; however, the values quoted have been found to be practical and are commonly used. The frequency of the tests will vary depending upon the type, size, age, and operating history of the unit. It is recommended that the user of the power apparatus establish a maintenance schedule based on these conditions and on original equipment manufacturer recommendations. The test results obtained during the periodic checks should be systematically filed in order to provide a diagnostic data base.

This guide was first published as IEE Std 62-1958, Recommended Guide for Making Dielectric Measurements in the Field. It was revised and republished as IEEE Std 62-1978, Guide for Field Testing Power Apparatus Insulation. This present revision contains more detailed descriptions of test procedures than the previous editions and also includes guidance covering visual inspection. It will therefore be published in different parts with each part covering a specific type of power apparatus.

This revision was prepared by the Diagnostic Testing Working Group under the sponsorship of the IEEE Power System Instrumentation and Measurements Committee with significant contributions from the IEEE Transformers Committee. The information in annex B is copyrighted by the Doble Engineering Company and used with permission.

At the time this guide was completed, the Diagnostic Testing Working Group had the following membership:

David Train, *Chair*

R. L. Almonte
R. L. Barker
P. W. Brunson
R. Connel
J. C. Drotos
D. T. Dumpert
M. Friedland
H. R. Gnerlich
B. R. Hughes
J. J. Kelly
W. McDermid
M. Meyer
P. Odam
R. Reid
F. Richens
E. So
E. Thomson
G. Trinh
R. A. Veitch
T. R. Wait
D. Ward
R. T. Ward

Copyright The Institute of Electrical and Electronics Engineers, Inc.
Provided by IHS under license with IEEE
No reproduction or networking permitted without license from IHS
Not for Resale

The following persons were on the balloting committee:

J. M. Bellanger
A. James Braun
J. M. Carr
L. Coffeen
S. W. Crampton
V. Dagrosa
Gerlad J. Fitzpartick
E. Hanique
Robert E. Hebner
Robert Hopkins
Harold Kirkham
J. A. Kise
S. R. Knudsen
J. Kuffel
William Larzelere
D. W. Lenk
Dan McAuliff
J. McBridge
Terry R. McComb
H. M. Millican
J. H. Moran
O. Petersons
R. Reid
P. H. Reynolds
R.L. Richardson
H. M. Schneider
J. C. Smith
E. So
Gary E. Stemler
David Train
Raymond S. Turgel
R. A. Veitch
C. von Herrmann
Barry H. Ward

When the IEEE Standards Board approved this guide on March 16, 1995, it had the following membership:

E. G. "Al" Kiener, *Chair*

Donald C. Loughry, *Vice Chair*

Andrew G. Salem, *Secretary*

Gilles A. Baril
Clyde R. Camp
Joseph A. Cannatelli
Stephen L. Diamond
Harold E. Epstein
Donald C. Fleckenstein
Jay Forster*
Donald N. Heirman
Richard J. Holleman
Jim Isaak
Ben C. Johnson
Sonny Kasturi
Lorraine C. Kevra
Ivor N. Knight
Joseph L. Koepfinger*
D. N. "Jim" Logothetis
L. Bruce McClung
Marco W. Migliaro
Mary Lou Padgett
John W. Pope
Arthur K. Reilly
Gary S. Robinson
Ingo Rusch
Chee Kiow Tan
Leonard L. Tripp

*Member Emeritus

Also included are the following nonvoting IEEE Standards Board liaisons:

Satish K. Aggarwal
Richard B. Engelman
Robert E. Hebner
Chester C. Taylor

Kim Breitfelder
IEEE Standards Associate Project Editor

Copyright The Institute of Electrical and Electronics Engineers, Inc.
Provided by IHS under license with IEEE
No reproduction or networking permitted without license from IHS
Not for Resale

Contents

CLAUSE PAGE

1. Overview 1

1.1 Scope 1

2. References 1

3. Definitions 3

4. Diagnostic chart 4

5. Safety 4

5.1 General 4
5.2 Personnel 4
5.3 Apparatus 6

6. Tests and test techniques 7

6.1 Windings 7
6.2 Bushings 27
6.3 Insulating fluids (transformer-grade mineral oil) 29
6.4 Tap changers 40
6.5 Core 43
6.6 Tanks and associated devices 45

ANNEX

Annex A (informative) Power factor measurements 53

Annex B (informative) Bushings 56

Annex C (informative) Infrared temperature measurements 58

Copyright The Institute of Electrical and Electronics Engineers, Inc.
Provided by IHS under license with IEEE
No reproduction or networking permitted without license from IHS
Not for Resale

IEEE Guide for Diagnostic Field Testing of Electric Power Apparatus—Part 1: Oil Filled Power Transformers, Regulators, and Reactors

1. Overview

1.1 Scope

This guide describes diagnostic tests and measurements that are performed in the field on oil-immersed power transformers and regulators. Whenever possible, shunt reactors are treated in a similar manner to transformers. The tests are presented systematically in categories depending on the subsystem of the unit being examined. A diagnostic chart is included as an aid to identifying the various subsystems. Additional information is provided regarding specialized test and measuring techniques.

Interpretive discussions are also included in several areas to provide additional insight on the particular test, or to provide guidance on acceptance criteria. These discussions are based on the authors' judgement of accepted practice. It should be noted that sometimes the results of several types of tests should be interpreted together to diagnose a problem. Manufacturer's acceptance criteria should also be consulted as it may take precedence over the criteria in this guide.

2. References

This guide shall be used in conjunction with the following publications. When the following standards are superseded by an approved revision, the revision shall apply.

ASTM D 117-89, Guide to Test Methods and Specifications for Electrical Insulating Oils of Petroleum Origin.[1]

ASTM D 877-87, Test Method for Dielectric Breakdown Voltage of Insulating Liquids Using Disk Electrodes.

ASTM D 923-91, Test Method for Sampling Electrical Insulating Liquids.

ASTM D 924-92(b), Test Method for Dissipation Factor (or Power Factor) and Relative Permittivity (Dielectric Constant) of Electrical Insulating Liquids.

[1]ASTM publications are available from the Customer Service Department, American Society for Testing and Materials, 1916 Race Street, Philadelphia, PA 19103, USA.

--`,,`,,,,-`-`,,`,,`,`,,`---
Copyright The Institute of Electrical and Electronics Engineers, Inc.
Provided by IHS under license with IEEE
No reproduction or networking permitted without license from IHS
Not for Resale

ASTM D 971-91, Test Method for Interfacial Tension of Oil Against Water by the Ring Method.

ASTM D 974-92, Test Method for Neutralization Number by Color-Indicator Titration.

ASTM D 1298-85 (Reaff 1990), Practice for Density, Relative Density (Specific Gravity), or API Gravity of Crude Petroleum and Liquid Petroleum Products by Hydrometer Method.

ASTM D 1500-91, Test Method for ASTM Color of Petroleum Products (ASTM Color Scale).

ASTM D 1524-84 (Reaff 1990), Method for Visual Examination of Used Electrical Insulating Oils of Petroleum Origin in the Field.

ASTM D 1533-88, Test Method for Water in Insulating Liquids (Karl Fischer Method).

ASTM D 1698-84 (Reaff 1990), Sediment and Soluble Sludge in Service-Aged Insulating Oils.

ASTM D 1816-84a (Reaff 1990), Standard Test Method for Dielectric Breakdown Voltage of Insulating Oils of Petroleum Origin Using VDE Electrodes.

ASTM D 2285-85 (Reaff 1990), Test Method for Interfacial Tension of Electrical Insulating Oils of Petroleum Origin Against Water by the Drop-Weight Method.

ASTM D 3487-88 (Reaff 1993), Specification for Mineral Insulating Oil Used in Electrical Apparatus.

ASTM D 3612-93, Test Method for Analysis of Gases Dissolved in Electrical Insulating Oil by Gas Chromatography.

ASTM D 3613-92, Test Methods of Sampling Electrical Insulating Oils for Gas Analysis and Determination of Water Content.

ASTM D 4059-91, Test Method for Analysis of Polychlorinated Biphenyls in Insulating Liquids by Gas Chromatography.

ASTM F 855-90, Specification for Temporary Grounding Systems to be Used on De-Energized Power Lines and Equipment.

IEEE Std 4-1995, IEEE Standard Techniques for High-Voltage Testing.[2]

IEEE Std 510-1983 (Reaff 1992), IEEE Recommended Practices for Safety in High-Voltage and High-Power Testing (ANSI).[3]

IEEE Std 637-1985 (Reaff 1992), IEEE Guide for the Reclamation of Insulating Oil and Criteria for Its Use (ANSI).

IEEE Std C57.12.00-1993, IEEE Standard General Requirements for Liquid-Immersed Distribution, Power, and Regulating Transformers (ANSI).

---

[2]As this standard goes to press, IEEE Std 4-1995 is approved but not yet published. The draft standard is, however, available from the IEEE. Anticipated publication date is September 1995. Contact the IEEE Standards Department at 1 (908) 562-3800 for status information.

[3]IEEE publications are available from the Institute of Electrical and Electronics Engineers, 445 Hoes Lane, P.O. Box 1331, Piscataway, NJ 08855-1331, USA.

Copyright The Institute of Electrical and Electronics Engineers, Inc.
Provided by IHS under license with IEEE
No reproduction or networking permitted without license from IHS Not for Resale

IEEE Std C57.12.80-1978 (Reaff 1992), IEEE Standard Terminology for Power and Distribution Transformers (ANSI).

IEEE Std C57.12.90-1993, IEEE Standard Test Code for Liquid-Immersed Distribution, Power, and Regulating Transformers and IEEE Guide for Short-Circuit Testing of Distribution and Power Transformers (ANSI).

IEEE Std C57.19.00-1991, IEEE General Requirements and Test Procedures for Outdoor Power Apparatus Bushings (ANSI).

IEEE Std C57.19.100-1995, IEEE Guide for Application of Power Apparatus Bushings.[4]

IEEE Std C57.104-1991, IEEE Guide for the Interpretation of Gases Generated in Oil-Immersed Transformers (ANSI).

IEEE Std C57.106-1991, IEEE Guide for Acceptance and Maintenance of Insulating Oil in Equipment (ANSI).

IEEE Std C57.113-1991, IEEE Guide for Partial Discharge Measurement in Liquid-Filled Power Transformers and Shunt Reactors.

3. Definitions

3.1 apparent charge (terminal charge): That charge that, if it could be injected instantaneously between the terminals of the test object, would momentarily change the voltage between its terminals by the same amount as the partial discharge itself. The apparent charge should not be confused with the charge transferred across the discharging cavity in the dielectric medium. Apparent charge, within the terms of this guide, is expressed in coulombs (C). One pC is equal to 10^{-12} C.

3.2 bushing (power and distribution transformer): An insulating structure including a central conductor, or providing a central passage for a conductor, with provision for mounting on a barrier, conducting or otherwise, for the purpose of insulating the conductor from the barrier and conducting current from one side of the barrier to the other.

3.3 diagnostic field tests and measurements (power apparatus): Procedures that are performed on site on the complete apparatus or parts thereof in order to determine its suitability for service.

NOTE—The parameters measured differ from apparatus to apparatus and may include electrical, mechanical, chemical, thermal, etc., quantities. Interpretation of the results is usually based on a change in the measured characteristics and/or by comparison with pre-established criteria. The tests are normally carried out at regular intervals based on users' experience and/or manufacturers' recommendations. These tests may also be performed on defective apparatus in order to determine the location and/or cause of failure.

3.4 dissipation factor (dielectric): The cotangent of the phase angle between a sinusoidal voltage applied across a dielectric (or combinations of dielectrics) and the resulting current through the dielectric system.

3.5 partial discharge (PD): Electric discharge that only partially bridges the insulation between conductors.

3.6 power factor (dielectric): The cosine of the phase angle between a sinusoidal voltage applied across a dielectric (or combinations of dielectrics) and the resulting current through the dielectric system.

For definitions of other terms concerning transformers see IEEE Std C57.12.80-1978.[5]

[4]As this standard goes to press, IEEE Std C57.19.100-1995 is approved but not yet published. The draft standard is, however, available from the IEEE. Anticipated publication date is September 1995. Contact the IEEE Standards Department at 1 (908) 562-3800 for status information.

[5]Information on references can be found in clause 2.

Copyright The Institute of Electrical and Electronics Engineers, Inc.
Provided by IHS under license with IEEE
No reproduction or networking permitted without license from IHS
Not for Resale

4. Diagnostic chart

For the purpose of this guide, the diagnostic tests are described with reference to principle categories of systems that constitute the transformer (e.g., windings, bushings, insulating fluids, tap changers, core, tanks, and associated devices). For each category, the quantities measured are shown in the diagnostic test chart (figure 1) for ease of reference. In some cases further subdivision is necessary.

Not all the tests are necessarily performed by any single user. In addition, the specific tests carried out vary according to the regular practice of the user and may depend on the history of the apparatus.

The establishment of benchmark values on a new piece of electrical equipment is very important when considering evaluation of future test results. Benchmark values are the first measurements taken on a piece of new or used equipment. Subsequent test results from tests on the same unit or from similar tests on similar equipment, when compared to these initial values and similar tests on similar equipment, may indicate a trend.

5. Safety

5.1 General

Considerations of safety in electrical testing apply not only to personnel but also to the test equipment and apparatus being tested. The following guidelines cover many of the fundamentally important procedures that have been found to be practical. Since it is impossible to cover all aspects in this guide, test personnel should also consult IEEE Std 510-1983, manufacturers' instruction manuals, union, company, or government regulations.

Prior to performing any test of power apparatus, there should be a meeting of all people who will be involved or affected by the test. The test procedure should be discussed so there is a clear understanding of all aspects of the work to be performed. Particular emphasis should be placed on personnel hazards and the safety precautions associated with these hazards. In addition, procedures and precautions should be discussed to ensure the production of meaningful test results without subjecting the test specimen to unnecessary risks.

Responsibilities for the various duties involved in performing the test should be assigned.

5.2 Personnel

5.2.1 Hazards

Insulation tests in the field present a hazard to personnel unless suitable precautions are taken. Apparatus or circuits to be tested shall be disconnected from the power system. Typical safety procedures call for a visual check of the disconnection or, when this is not possible, a check with a voltage indicator. Grounds are then applied. Personnel shall be instructed to treat all ungrounded apparatus as energized.

5.2.2 Ground connection

Use of working grounds should comply with established company guidelines. For further information see ASTM F 855-90.

Copyright The Institute of Electrical and Electronics Engineers, Inc.
Provided by IHS under license with IEEE
No reproduction or networking permitted without license from IHS Not for Resale

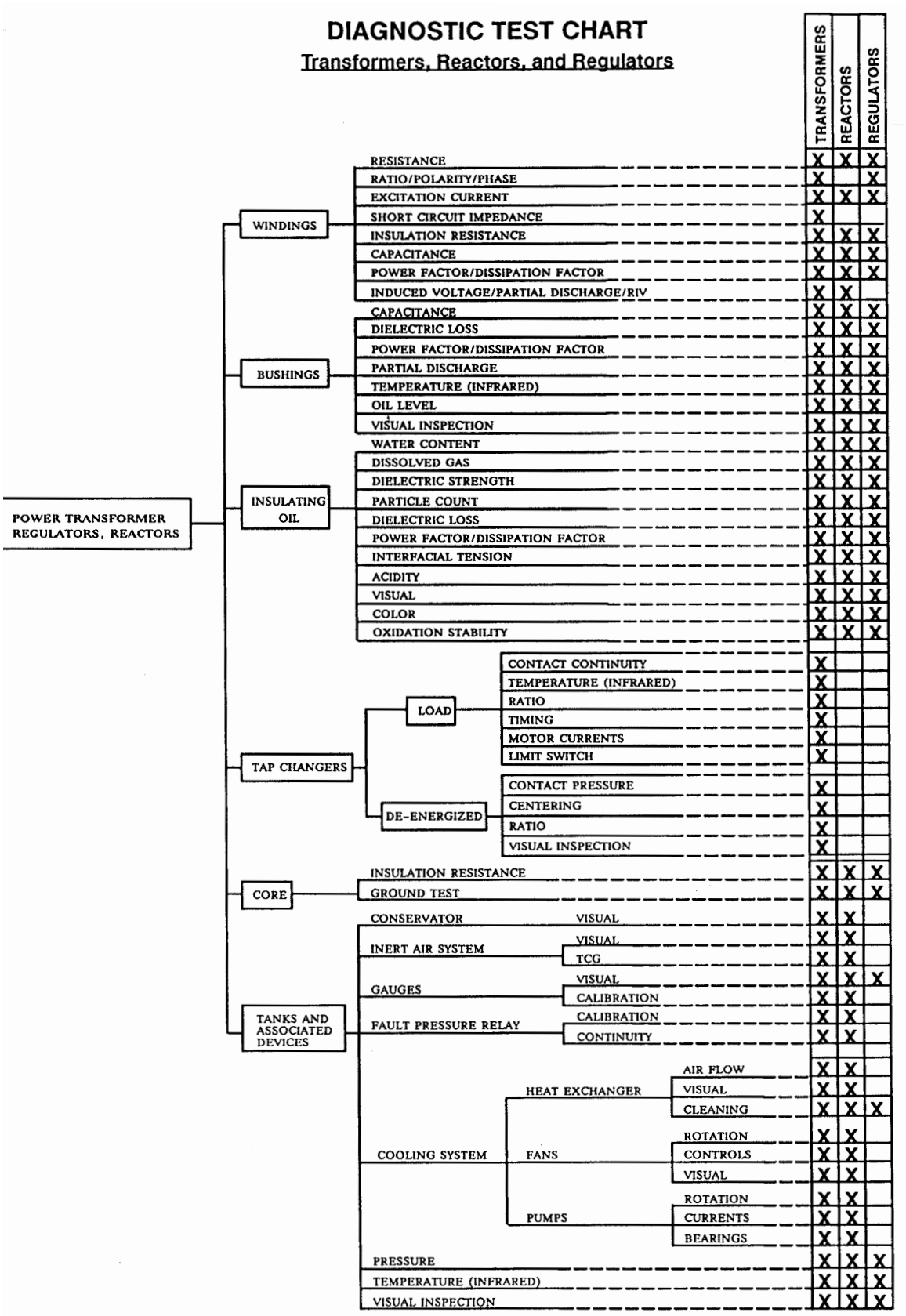

Figure 1—Diagnostic test chart

Copyright The Institute of Electrical and Electronics Engineers, Inc.
Provided by IHS under license with IEEE
No reproduction or networking permitted without license from IHS
Not for Resale

5.2.3 Precautions

When testing, precautions shall be taken to prevent personnel from contacting energized circuits. An observer may be stationed to warn approaching personnel and may be supplied with means to de-energize the circuit. The means may include a switch to shut off the power source and ground the circuit until all stored charges are dissipated.

5.2.4 Warning signs and barriers

The test area may be marked off with signs and easily visible tape. Warning signs shall conform to the requirements of governing bodies such as the Occupational Safety and Health Administration (OSHA) in the United States.

5.2.5 Atmosphere inside tank

Prior to entry, confirmation should be made that the atmosphere inside the tank is adequate to support life. This should be checked according to company guidelines and procedures or manufacturer's instructions.

5.3 Apparatus

5.3.1 Consequences of failure

Certain test procedures could result in fire; therefore, noncontaminating fire-fighting equipment should be available before beginning tests that apply dielectric stress to the transformer insulation system.

5.3.2 Overvoltage

The voltage may accidentally exceed the desired maximum during the conduction of high-voltage tests. A sphere gap, adjusted to spark over at a voltage slightly above the desired maximum, may be connected across the voltage source (refer to IEEE Std 4-1995). By selecting the proper value of series resistor, the gap may be used to provide a warning signal, to inhibit further rise in the test voltage, or to activate an overcurrent circuit breaker in the power supply circuit.

5.3.3 Graded insulation

When the insulation level of the winding is graded from one end to the other, the magnitude of the applied test voltage should correspond to the lowest insulation level.

5.3.4 Testing under vacuum

Under no condition shall tests be performed on the transformer while the equipment is under vacuum. The dielectric strength of the system is significantly reduced under these conditions.

5.3.5 Surge arresters

If the test voltage is expected to approach or exceed the operating voltage of any transformer-mounted surge arresters the arresters should be disconnected before energizing the transformer. This avoids arrester damage and limitation of the test voltage due to arrester operation.

Copyright The Institute of Electrical and Electronics Engineers, Inc.
Provided by IHS under license with IEEE
No reproduction or networking permitted without license from IHS Not for Resale

6. Tests and test techniques

6.1 Windings

In general, the windings are checked for evidence of physical displacement or distortion, broken connections or strands, short circuited turns, or defects in insulation. The parameters that are usually checked are described in this clause together with an indication, where possible, of acceptable limits for the quantities being measured. For the tests and measurements on windings, the oil pumps should be switched off.

6.1.1 Winding resistance

Transformer winding resistances are measured in the field in order to check for abnormalities due to loose connections, broken strands, and high-contact resistance in tapchangers. Interpretation of results is usually based on a comparison of measurements made separately on each phase in the case of a wye-connected winding or between pairs of terminals on a delta-connected winding. Comparison may also be made with original data measured in the factory. Agreement to within 5% for any of the above comparisons is usually considered satisfactory. It may be necessary to convert the resistance measurements to values corresponding to the reference temperature in the transformer test report. The conversions are accomplished by the following formula:

$$R_s = R_m \frac{T_s + T_k}{T_m + T_k}$$

where

R_s is resistance at desired temperature T_s
R_m is measured resistance
T_s is desired reference temperature (°C)
T_m is temperature at which resistance was measured (°C)
T_k is 234.5 °C (copper)
is 225 °C (aluminum)

NOTE—The value of T_k may be as high as 230 °C for alloyed aluminum.

Determination of the transformer winding temperature is important in making a resistance measurement. However, it is very difficult to measure the temperature of the winding accurately under field conditions. Some methods commonly used include the following:

a) Place a thermometer in contact with the tank wall. This will not give an accurate indication of the real winding temperature if the transformer has been recently removed from service.

b) Use values obtained from the permanently installed temperature indicators. If the transformer has recently been removed from service, this may be the only means available for estimating the winding temperature.

c) For nitrogen blanketed transformers a thermometer may be placed in the main tank by inserting it in openings in the top of the tank or in the wells for the permanent temperature indicators. Inserting a thermometer into the main tank usually requires breaking the hermetic seal on the transformer and relieving a positive nitrogen pressure. This may introduce moisture into the transformer and carries the risk that a conductive object could accidentally be dropped into the winding. Mercury thermometers should not be used inside a transformer tank due to the results of breakage. Use of the wells for the permanent temperature indicators requires removal of the permanent sensor from the wells.

--`,,`,,,,-`-`,,`,,`,`,,`---

Copyright The Institute of Electrical and Electronics Engineers, Inc.
Provided by IHS under license with IEEE
No reproduction or networking permitted without license from IHS
Not for Resale

Normally there will be some variation in the values indicated by the different sensors. If the transformer has been out of service for long enough to have a uniform temperature throughout its mass, averaging of values from all the indicators may yield better results than using a single indicator.

6.1.1.1 Conductor resistance measurement techniques

Transformer winding resistance is usually measured using either bridge techniques, the voltmeter-ammeter method, or a micro-ohmmeter. When bridges are used, a Wheatstone bridge is preferred for resistance values of ≥1 Ω. A Kelvin bridge or a micro-ohmmeter is preferable for resistance values of <1 Ω.

Temperature correction of winding resistance is not normally required on site because measurement comparison is made between phases.

6.1.1.1.1 Voltmeter-ammeter method

The voltmeter-ammeter method is sometimes more convenient than the bridge method. It should be employed only if the rated current of the transformer winding is >1 A. Digital voltmeters and digital ammeters of appropriate accuracy are commonly used. Measurement is made with direct current, and simultaneous readings of current and voltage are taken using the connections of figure 2. The required resistance is calculated from the readings in accordance with Ohm's law.

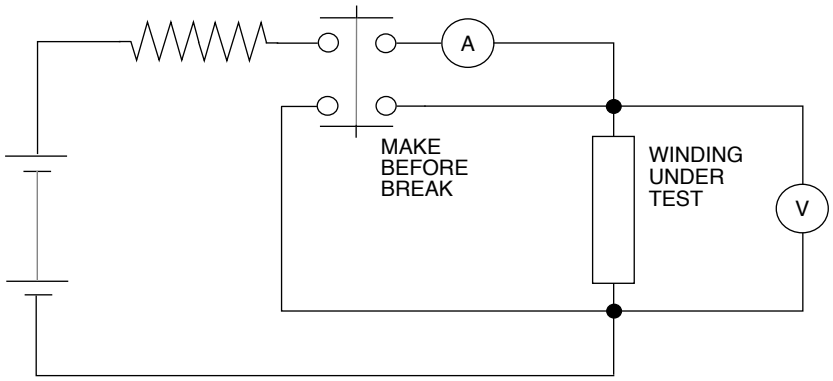

Figure 2—Resistance measurement using voltmeter-ammeter method

A 12 V battery is normally used as the power supply. However, a regulated electronic power supply may also be used providing its ripple content is <1% of mean voltage.

In order to minimize measuring errors the following precautions should be taken:

a) The measuring instruments should have such ranges that the readings may be made as near full scale as possible and in any case above 70% of full scale.

b) The polarity of the core magnetization should be kept constant during all resistance measurements.

NOTE—A reversal in magnetization of the core can change the time constant and result in erroneous readings.

c) The voltmeter leads should be independent of the current leads and should be connected as closely as possible to the terminals of the winding to be measured. This avoids including the resistances of current-carrying leads and their contacts and the resistances of extra lengths of leads in the reading.

In general, the winding will exhibit a long dc time constant.

Copyright The Institute of Electrical and Electronics Engineers, Inc.
Provided by IHS under license with IEEE
No reproduction or networking permitted without license from IHS Not for Resale

Readings should not be taken until after the current and voltage have reached steady-state values. To reduce the time required for the current to reach its steady-state value, a noninductive external resistor should be added in series with the dc source. The resistance should be large compared to the resistance of the winding. It will then be necessary to increase the source voltage to compensate for the voltage drop in the series resistor. The time will also be reduced by ensuring that all other transformer windings are open circuited during these tests.

The currents used for these measurements normally do not exceed 15% of the rated current. This avoids heating the winding and thereby changing its resistance. Resistance variation should not exceed 5% from phase to phase.

Precautions: If the current is suddenly switched off, a high voltage will be generated across the winding. The current should be switched off by a suitably insulated switch before personnel contact the test circuit. Alternatively, the transformer winding should be short-circuited before switching the current off providing this does not result in damage to the power supply or any series connected resistor.

To prevent the voltmeter from damage it should be disconnected from the circuit before switching the current on or off.

6.1.1.1.2 Bridge or micro-ohmmeter method

Connection of both the bridge and the micro-ohmmeter to the circuit under test is basically the same. Using the instruction manual as a guide, the four leads should be connected to the circuit being measured. Two leads, one potential and one current, should be connected to each end of the circuit to be measured. Care should be taken to ensure good contact of all lead connections and to ensure that all test leads are the same (i.e., length, gauge, and material).

Care should be taken to connect the current leads outside of the voltage leads at the points of connection to the test circuit (see figure 3).

When using a bridge, it should be balanced, starting with the most significant digit setting followed by the next most significant etc., until the bridge null meter is balanced. The measured conductor resistance is read directly from the bridge settings. When using the micro-ohmmeter, only a “range” selection needs to be made and the measured reading is displayed directly on the instrument. After obtaining the “measured” resistance, R_m, from the bridge settings or the micro-ohmmeter, that value should be corrected for temperature using the procedure given in 6.1.1.

This “corrected” resistance value can now be compared with previous values that were corrected to the same standard conditions.

Interpretation: The interpretation of results is very dependent on the type of conductor being measured. Some conductors consist of several parallel paths of stranded wires and detecting a problem with only one strand may be beyond the resolution of the bridge or micro-ohmmeter. If more than one strand is broken or there is a high-resistance internal connection, the Kelvin bridge or micro-ohmmeter should detect the resulting higher resistance circuit.

Comparison of readings with other phases, duplicate transformers, or previous measurements under field conditions are recommended. Variations under field conditions should not exceed 5%.

--`,,`,,,`-`-`,,`,,`,`,,`---

Copyright The Institute of Electrical and Electronics Engineers, Inc.
Provided by IHS under license with IEEE
No reproduction or networking permitted without license from IHS
Not for Resale

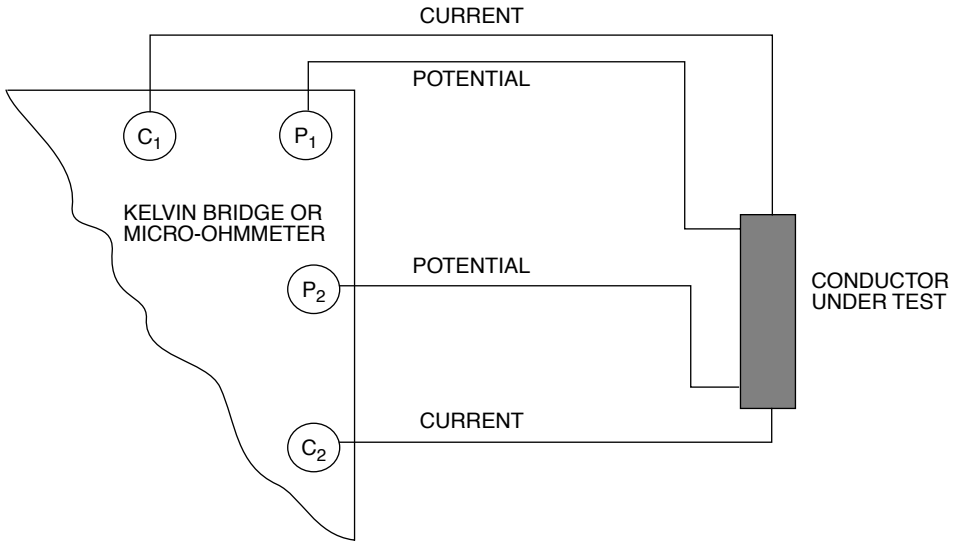

Figure 3—Typical low-resistance measurement connection

6.1.2 Ratio/polarity/phase

6.1.2.1 General

The turns ratio of a transformer is the ratio of the number of turns in a higher voltage winding to that in a lower voltage winding. The voltage ratio of a transformer is the ratio of the rms terminal voltage of a higher voltage winding to the rms terminal voltage of a lower voltage winding under specified conditions of load. For all practical purposes, when the transformer is on open circuit, its voltage and turns ratios may be considered equal.

The polarity of a transformer is determined by the internal connections and is indicated by the nameplate markings. Polarity is of interest if the transformer is to be connected in a parallel manner with one or more other transformers.

Results of the polarity and transformation ratio tests are absolute, and may be compared with the manufacturer's nameplate specifications.

Transformer winding ratios, polarity, and phase connections should be checked before energizing the transformer for the first time on site. The ratio in particular is checked during regular (e.g., annual) inspections and it is recommended that it also be checked before returning the transformer to service if the unit has been subjected to a through-fault.

6.1.2.2 Measurement of transformer polarity

There are a number of commercial transformer turns ratio test sets available from manufacturers serving the power industry. These instruments, when operated in accordance with the manufacturer's instructions, provide convenient and accurate readings of ratio and polarity of power transformers.

If a commercial test set is not available, then transformer polarity may be measured and interpreted using the procedures in 6.1.2.2.1 and 6.1.2.2.2.

Copyright The Institute of Electrical and Electronics Engineers, Inc.
Provided by IHS under license with IEEE
No reproduction or networking permitted without license from IHS Not for Resale

6.1.2.2.1 Measurement of transformer polarity by inductive kick

Polarity by inductive kick may be measured using two dc voltmeters and a source of dc current. For safety reasons it is preferable to apply the dc source across the high-voltage winding. Figure 4 illustrates the technique.

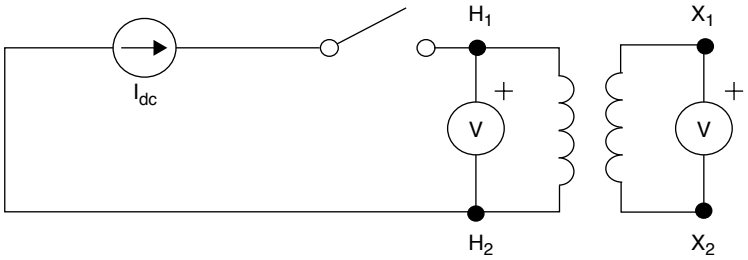

Figure 4—Polarity by inductive kick

A dc voltmeter should be placed across the H_1–H_2 leads, with the positive lead connected to the H_1 terminal.

A dc voltmeter should be placed across the X_1–X_2 leads, with the positive lead connected to the X_1 terminal.

A low-voltage source, such as a battery, should be connected to the H_1–H_2 terminals, thus causing a small but noticeable deflection of the dc voltmeter connected across the H_1–H_2 terminals. The connection of the dc source should be such that the dc voltmeter indication is positive. The magnitude of the deflection is not of concern.

The direction of the deflection of the dc voltmeter connected across terminals X_1–X_2 should be observed as the excitation is broken. If the deflection is positive then the transformer is additive. If the deflection is negative then the transformer is subtractive. The polarity, not the magnitude of deflection, is of concern.

This test should be repeated for each phase of a polyphase transformer.

6.1.2.2.2 Measurement of transformer polarity by alternating voltage

If the transformer ratio is <30 then polarity may be measured by using a convenient source of ac with an ac voltmeter, as shown in figure 5.

The transformer should be connected as shown in figure 5.

A small alternating voltage (as measured in the tens of volts), supplied by a fused variable transformer, should be applied to the H_1–H_2 leads.

If the ac voltmeter indicates a value less than the source voltage then the polarity is subtractive. If the voltmeter indicates a value greater than the source voltage then the polarity of the transformer is additive.

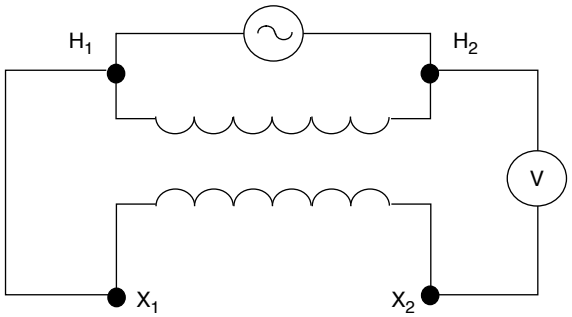

Figure 5—Polarity by ac method

Copyright The Institute of Electrical and Electronics Engineers, Inc.
Provided by IHS under license with IEEE
No reproduction or networking permitted without license from IHS
Not for Resale

6.1.2.2.3 Polarity of polyphase transformers

Each phase of a polyphase transformer should have the same relative polarity when tested in accordance with either of the methods described in 6.1.2.2.1 and 6.1.2.2.2 or with a commercial instrument.

6.1.2.3 Transformer turns ratio test set

There are a number of commercial transformer turns ratio test sets available from manufacturers serving the power industry. These instruments, when operated in accordance with the manufacturer's instructions, provide convenient and accurate readings of ratio and polarity of power transformers.

If the transformer has load taps, the turns ratio should be determined for all of these taps with the tap changer for de-energized operation in one specific position such as the nominal or the maximum turns position. In addition, with the load tap changer (LTC) in the neutral position, the turns ratio should be determined for all positions of the tap changer for de-energized operation.

If a commercial test set is not available, then transformation ratio may be measured and interpreted using the procedures in 6.1.2.3.1 and 6.1.2.3.2.

6.1.2.3.1 Voltmeter method

Two ac voltmeters are used, one connected to the high-voltage winding and the other connected to the low voltage winding. The high-voltage winding is excited to a voltage not exceeding the rating of the voltmeter. Both voltmeters are read simultaneously. A second set of readings should be taken with the instruments interchanged. The values indicated should be averaged to calculate the ratio.

A meaningful ratio measurement may be made using only a few volts of excitation. The transformer should be excited from the highest voltage winding in order to avoid possibly unsafe high voltages. Care should be taken during the application of voltage and during the measurement. It is important that simultaneous readings of both voltmeters be made.

The voltmeters used should have accuracies commensurate with the requirements of a 0.5% ratio calculation.

6.1.2.3.2 Ratio measurement using a capacitance and power factor bridge

Transformation ratio may be measured with a capacitance and power factor bridge (sometimes called a dissipation factor bridge). This method will provide good results with power transformers as well as with potential transformers where the phase angle error can also be measured. In addition, higher voltage tests may be performed, up to the rating of the instrument, which is frequently 10 kV or 12 kV.

There are several excellent instruments available for this purpose. The manufacturer's instructions should be consulted for the exact procedure for the bridge used.

6.1.2.4 Interpretation of the transformer ratio test

The turns ratio tolerance should be within 0.5% of the nameplate specifications for all windings. For three-phase, Y-connected windings, this tolerance applies to the phase-to-neutral voltage. If the phase-to-neutral voltage is not explicitly indicated on the nameplate, then the rated phase-to-neutral voltage should be calculated by dividing the phase-to-phase voltage by $\sqrt{3}$.

From time to time it may be observed that the measured ratios of the outer phases of a three-phase transformer will be slightly different. Unless the differences are >0.5% there is no cause for rejection of this transformer.

Copyright The Institute of Electrical and Electronics Engineers, Inc.
Provided by IHS under license with IEEE
No reproduction or networking permitted without license from IHS Not for Resale

Infrequently, it will be found that the ratio will be different from that specified on the transformer nameplate. This condition may occur when a very large transformer is equipped with a low-voltage winding having a relatively small number of turns. In this case, the turns ratio should be expressed to the nearest complete turn. This error is one of resolution, since the number of turns may be less than 200 turns (200 turns being required to provide 0.5% resolution). For further information see IEEE Std C57.12.00-1993.

It should also be noted that transformers with load taps in the low-voltage winding, may not have an equal number of turns between taps due to the overall low number of turns in the low-voltage winding. In such cases, the voltage variation with tap changer operation will not be uniform. All three phases should have the same measured ratio, although it may not be in exact agreement with the nameplate.

6.1.3 Exciting current

6.1.3.1 General

The single-phase exciting-current test is very useful in locating problems such as defects in the magnetic core structure, shifting of the windings, failures in the turn-to-turn insulation, or problems in the tap changing devices. These conditions result in a change in the effective reluctance of the magnetic circuit, which affects the current required to force a given flux through the core.

6.1.3.2 Test methods

The test comprises a simple measurement of single-phase current on one side of the transformer, usually the high-voltage side, with the other side left floating (with the exception of a grounded neutral). Three-phase transformers are tested by applying a single-phase voltage to one phase at a time. The tests should be performed at the highest possible test voltage without exceeding the voltage rating of the excited winding. The instrumentation should, whenever possible, exclude from the measurement the capacitive currents between the excited winding and the other windings, the core, or the tank. For purposes of comparison, the subsequent tests should be performed at the same value of test voltage and use the same test connections.

6.1.3.3 Analysis of test results

The usual approach to the analysis of the exciting-current test results is to compare the results with the previous tests, or with similar single-phase transformers, or with phases of a given three-phase transformer. For the great majority of three-phase transformers, the pattern is two similar high readings on the outer phases and one lower reading on the center phase. The recommended initial tests include measurements at half of the LTC positions, the neutral position, and one step in the opposite direction. The results may differ for various LTC positions, but the relationship between the phases is expected to remain unchanged. The understanding of how the LTC affects the current magnitude of individual phases is essential for developing proper analysis.

6.1.3.4 Effect of residual magnetism

The transformer core may have residual magnetism present as a result of being disconnected from the power line, or as is frequently the case, as a result of dc measurements of winding resistance. The residual magnetism results in the measurement of higher than normal exciting current.

There is no widely accepted field method for distinguishing between the effect of residual magnetism and the effect of a problem present in the transformer. However, experience shows that although some residual magnetism is almost always present in the core, in most cases it has no significant effect on test results.

In most of the problems detected by using this procedure, the difference between the individual phase currents in the case of three single-phase transformers or between the currents of the outer phases of a three-phase transformer has exceeded 10%. This also applies when comparing with previous measurements.

Copyright The Institute of Electrical and Electronics Engineers, Inc.
Provided by IHS under license with IEEE
No reproduction or networking permitted without license from IHS
Not for Resale

However, smaller changes in relative currents may also be indicative of problems associated with the core and should be investigated.

If a significant change in the test results is observed, the only known reliable method of excluding the effect of residual magnetism is to demagnetize the transformer core.

It is recommended that the dc measurements of the winding resistance be performed after the exciting current tests.

6.1.3.5 Methods for demagnetization

There are two techniques that can be used to demagnetize the transformer core. The first method is to apply a diminishing alternating current to one of the windings. For most transformers, due to high voltage ratings involved, this method is impractical and involves safety hazards.

A more convenient method is to use a direct current. The principle of this method is to neutralize the magnetic alignment of the core iron by applying a direct voltage of alternate polarities to the transformer winding for decreasing intervals. The interval is usually determined when the demagnetizing current reaches a level slightly lower than the previous level, at which time the polarity of the voltage is reversed. The process is continued until the current level is zero. On three-phase transformers the usual practice is to perform the procedure on the phase with the highest exciting current reading. In most cases, experience has demonstrated that this procedure is sufficient to demagnetize the whole core.

6.1.4 Short-circuit impedance

6.1.4.1 General

The short-circuit impedance (%*Z*) of power transformers is sometimes measured on site and it can be compared to the nameplate or factory test values. It is used to detect winding movement that may have occurred since the factory tests were performed. Winding movement usually occurs due to heavy fault current or mechanical damage during transportation or installation.

The measurements are usually performed on one phase at a time. Changes of more than ±3% of the short-circuit impedance should be considered significant.

6.1.4.2 Test methods and procedures

Method: A convenient method to measure the short-circuit impedance of a transformer is the voltmeter-ammeter method. This method is applicable to testing either single-phase or three-phase transformers. A power source is used to drive a current through the impedance. The current and the voltage across the impedance are measured simultaneously. The impedance is then given by the ratio of the measured voltage and current.

Preparation: Conductors used for short circuiting the transformer windings should be low-impedance conductors having a cross-section equal to, or greater than No. 1 AWG. They should be as short as possible and be kept away from magnetic masses. Contacts should be clean and tight. These precautions are of importance in avoiding extraneous impedance voltages and losses that might otherwise be introduced into the measurements.

True rms responding meters (voltmeter and ammeter) with accuracies of at least 0.5% and a sinusoidal 60 Hz (rated frequency) adjustable power source should be used for the measurements. The adjustable power source could be derived from the station service transformer through a variable autotransformer rated 0–280 V and at least 10 A. Alternatively a completely isolated power amplifier with an internal 60 Hz oscillator rated at least 250 VA may be used. The adjustable power source should not be obtained directly from a portable gasoline engine generator since the output waveform is usually distorted and its frequency is not sufficiently stable.

Copyright The Institute of Electrical and Electronics Engineers, Inc.
Provided by IHS under license with IEEE
No reproduction or networking permitted without license from IHS Not for Resale

6.1.4.3 Impedance test of a single-phase transformer

One of the two windings of the transformer (usually the low-voltage winding) is short-circuited with a low-impedance conductor, and voltage at rated frequency is applied to the other winding. The energizing voltage is adjusted to circulate current in the order of 0.5–1.0% of rated current in the windings or 2–10 A depending on the rating of the transformer under test. Care should be taken to limit the test current so that it will not cause the energizing voltage waveform to become distorted due to overloading the power source. An oscilloscope should be used to observe the voltage waveform during testing. The energizing voltage can be extremely small in comparison with the rated voltage of the winding without introducing significant errors. A typical arrangement is shown in figure 6.

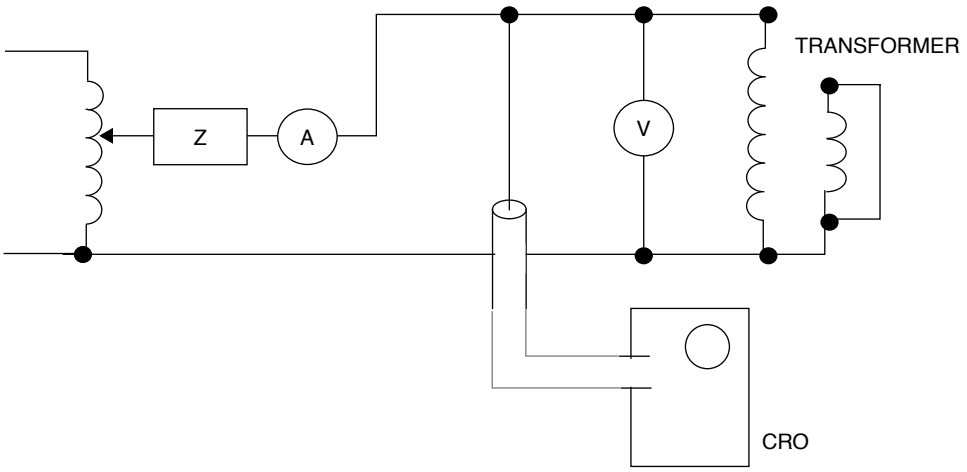

Figure 6—Short-circuit impedance measurement on single-phase transformer

For accurate measurements, the voltmeter should be connected directly to the transformer terminals to avoid voltage drop in the current carrying leads. Meter ranges should be chosen so that their readings are in the upper half of full scale. The current and voltage readings should be read simultaneously.

The $\%Z$ of the single-phase transformer can be calculated using the following formula:

$$\%Z \text{ single-phase } = (1/10) \cdot [(E_m/I_m) \cdot kVA_r/(kV_r)^2]$$

where

E_m is measured test voltage
I_m is the current
kVA_r is the rating of the transformer in kilovoltamperes
kV_r is the rating of the winding being energized in kilovolts

6.1.4.4 Impedance test of an autotransformer

An autotransformer may be tested for impedance with its internal connections unchanged. The test is made by short-circuiting its low-voltage terminals and applying voltage at rated frequency to the high-voltage terminals. The same procedure is followed as that used for a single-phase transformer.

6.1.4.5 Impedance test of a three-phase, two-winding transformer

A three-phase transformer may be tested for impedance using a single-phase power source regardless of winding connection. The neutral terminals, if any, are not used. The test is made by short-circuiting the three

Copyright The Institute of Electrical and Electronics Engineers, Inc.
Provided by IHS under license with IEEE
No reproduction or networking permitted without license from IHS
Not for Resale

line-leads of the low-voltage windings and applying a single-phase voltage at rated frequency to two terminals of the other winding. Three successive readings are taken on the three pairs of leads, (e.g., H_1 and H_2, H_2 and H_3, H_3 and H_1), with the test current adjusted to the same level for each reading. Then the %*Z* of the three-phase transformer is given by:

$$\%Z \text{ three-phase} = (1/60) \cdot [(E_{12} + E_{23} + E_{31})/I_m] \cdot [kVA_{3r}/(kV_{1r})^2]$$

where

E_{12}, E_{23}, E_{31} are measured test voltages

I_m is the current

kVA_{3r} is the three-phase rating in kilovoltamperes

kV_{lr} is the rated line-to-line voltage of the energized windings

6.1.4.6 Impedance test of a three-winding transformer

A three-winding transformer, which may be either single-phase or three-phase, may be tested for impedance by making two-winding impedance measurements with each pair of windings (which means three different impedance measurements) following the same procedure as that used for a two-winding transformer. The individual equivalent impedance of the separate windings may then be determined using the following expressions:

$$Z_1 = (Z_{12} - Z_{23} + Z_{31})/2$$

$$Z_2 = (Z_{23} - Z_{31} + Z_{12})/2$$

$$Z_3 = (Z_{31} - Z_{12} + Z_{23})/2$$

where

Z_{12}, Z_{23}, Z_{31} are the measured impedance values between pairs of windings, as indicated, all expressed on the same kVA base.

6.1.4.7 Impedance test of an autotransformer with tertiary winding

An autotransformer with tertiary winding, which may be either single-phase or three-phase, may be tested for impedance using the same procedure as that used for a three-winding transformer.

6.1.4.8 Interpretation of the impedance test

A change in the short-circuit impedance of the transformer indicates a possible winding movement within the transformer. Since the overall measurement accuracy is no better than 1%, using 0.5% accuracy meters, changes of ±2% of the short-circuit impedance are usually not considered significant. Changes of more than ±3% of the short circuit impedance should be considered significant. For example, a short-circuit impedance change from 5.0–5.4% should be considered significant since it indicates a change of 8%. For further information on impedance testing, see IEEE Std C57.12.90-1993.

Copyright The Institute of Electrical and Electronics Engineers, Inc.
Provided by IHS under license with IEEE
No reproduction or networking permitted without license from IHS Not for Resale

6.1.5 Insulation resistance

6.1.5.1 General

Insulation resistance measurements are usually performed in order to verify that the state of dryness of the insulation of the various windings and the core are of acceptable values. Insulation resistance testing may also reveal important information about concealed damage to bushings. Results of insulation resistance testing may be misleading unless taken in the context of tests of similar apparatus or tests on the same piece of apparatus taken over a lengthy time period.

It is known that three components of current may be measured upon application of voltage to an insulation system.

a) *Capacitance charging current*: This first component of current is caused by charging the geometric capacitance of the apparatus being tested. Depending on the size and type of the unit being tested, this current may be quite large upon first application of voltage. The magnitude of this current will diminish with time, however, and eventually will become zero as the apparatus becomes fully charged.

b) *Absorption current*: This second component of current is caused by molecular changes within the insulation material. These molecular changes cause a current which may exist for an extended period of time, typically in the range of several seconds to several minutes, in transformers.

c) *Leakage current*: This third component of current rises and becomes stable immediately. The leakage current is the quotient of the applied voltage and the insulation resistance in accordance with Ohm's law.

Ideally, in order to have exact results from an insulation resistance test it is necessary that readings of leakage current not be taken until the capacitance charging current and the absorption current have become negligible (see 6.1.5.2).

Insulation resistance measurements on transformers are normally performed at dc voltages up to 5000 Vdc. Low-voltage insulation resistance tests may be carried out using a hand-held test set that may be line operated, battery operated, or operated by a crank type generator. These testers are available in voltage ranges up to 5000 V and will provide a direct reading of insulation resistance on either an analog or digital meter.

Tests at voltages >5000 V can be conducted using higher voltage megohmmeters or dielectric test sets. These instruments, available with output voltages to several hundred kilovolts, may sometimes be equipped with microammeters instead of reading directly in megohms. In this case, the insulation resistance is calculated using Ohm's law.

There are several excellent instruments available for the measurement of insulation resistance. Test connections are very important, and a guard circuit may be utilized for accurate readings. The instrument manufacturer's instruction manual should be consulted for further guidance.

It is very important that the temperature of the insulation system be known when performing the insulation resistance test. Insulation resistance is very sensitive to insulation temperature and varies inversely with temperature. In some insulation systems an increase of 10 °C will cause the insulation resistance to drop approximately in half. Insulation resistance measurements are generally corrected to a standard temperature (usually 20 °C) using nomographs or tables that have been prepared for this purpose.

Copyright The Institute of Electrical and Electronics Engineers, Inc.
Provided by IHS under license with IEEE
No reproduction or networking permitted without license from IHS
Not for Resale

The tank and core should be grounded for this test and the windings should be short-circuited. The windings not being tested should be grounded. The bushings should be carefully wiped to remove traces of condensation or contamination.

Interpretation: No specific absolute values of acceptable insulation resistance can be given; however, reference should be made to previous test history to establish a trend.

6.1.5.2 Polarization index test

When apparatus such as large transformers are tested, long charging times due to the absorption current may be encountered. The polarization index test is a ratiometric test which may be used to predict insulation system performance even if the charging currents have not diminished to zero. A very important aspect of this test is its temperature insensitivity. Since the test is ratiometric in nature, results do not need to be temperature corrected.

The polarization index test is an insulation resistance test that lasts for 10 min. The insulation resistance is recorded after 1 min, then again after 10 min. The polarization index is the quotient of the 10 min and 1 min readings as shown below:

$$PI = R_{10}/R_1 \text{(dimensionless)}$$

where

PI is polarization index
R is resistance

After insulation resistance readings have been made, the test voltage is returned to zero and the insulation is discharged.

Interpretation: For small transformers the polarization index will be equal to 1 or slightly higher. Larger transformers may exhibit a polarization index of 1.1–1.3. In general, a high value of polarization index indicates that the insulation system is in good condition. A polarization index of <1 indicates that immediate corrective action is required.

If the value of polarization index obtained is less than desired or compares unfavorably with previous tests, cleaning and drying will frequently restore it to acceptable values.

6.1.5.3 Safety

The capacitance charging current and absorption current generated by application of the test voltage are reversible. Upon removal of the test voltage source the test specimen will remain charged and will be a hazard.

CAUTION

The energy stored within the test specimen may be lethal and must be discharged safely.

It is recommended that the test specimen be discharged by short-circuiting for a period at least four times as long as the test voltage was applied. Before bare hand contact, the absence of voltage shall be confirmed by measurement.

The insulation resistance measurements should be performed with windings and leads completely immersed in oil. The appropriate temperature correction factors should be used. Under no conditions shall tests be made while the equipment is under vacuum.

Copyright The Institute of Electrical and Electronics Engineers, Inc.
Provided by IHS under license with IEEE
No reproduction or networking permitted without license from IHS Not for Resale

6.1.6 Capacitance, power factor, and dissipation factor

6.1.6.1 Capacitance

The electrical equipment considered in this guide is very much like a simple capacitor. Both contain a dielectric material (insulation) between two electrodes (conductors). The capacitance is dependent on the characteristics of the dielectric material, and on the physical configuration of the electrodes. In electrical apparatus, if the insulating material characteristics or the conductor configurations change, a difference in the measured capacitance will occur. These changes are caused by deterioration of the insulation, contamination, or physical damage.

6.1.6.2 Power factor and dissipation factor

The dielectric loss in an insulation system is the power dissipated by the insulation when subjected to an applied alternating voltage. All electrical insulation in power apparatus has a measurable quantity of dielectric loss, regardless of condition. Good insulation usually has a very low loss. A high loss may indicate problems in the insulation structure.

Normal aging of an insulating material will cause dielectric loss to increase. Contamination of insulation by moisture or chemical substances may cause losses to be higher than normal. Physical damage from electrical stress or other outside forces also affects the level of losses.

Loss factor is a dimensionless ratio expressed in percent which gives an indication of the condition of insulation. It is measured in terms of dissipation factor (tan Δ) or power factor. When an ac voltage is applied to insulation, current flow occurs in the insulation (see figure 7). The total current has two components, one resistive and the other capacitive, which can be measured separately. Very simply, dissipation factor is the ratio of resistive current to capacitive current, and power factor is the ratio of current to total current flowing through insulation. For most applications involving power apparatus insulation, both quantities are very similar.

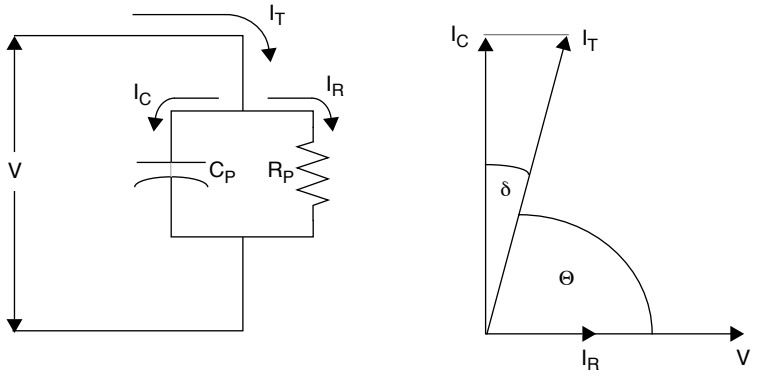

V = Applied voltage
I_T = Total current
I_R = Resistive current
I_C = Capacitive current
Dissipation factor = tangent δ= I_R/I_C
Power factor = cosine Θ= I_R/I_T

Figure 7—Simple vector diagram for loss factor test

6.1.6.3 Application

A dielectric loss testing program provides several important benefits. Initial tests on new equipment as it arrives from the manufacturer determine the presence of manufacturing defects or shipping damage, and also provide benchmark test values for future comparison. Periodic tests performed during the service life of

Copyright The Institute of Electrical and Electronics Engineers, Inc.
Provided by IHS under license with IEEE
No reproduction or networking permitted without license from IHS
Not for Resale

the equipment can indicate that the insulation is either aging normally or deteriorating rapidly. Diagnostic tests on suspect or failed equipment may disclose the location of a fault, or the reason for failure.

Dielectric loss tests provide greatest benefit when performed periodically as part of a complete maintenance program.

6.1.6.4 Test equipment

Dielectric loss is usually determined by a bridge measuring instrument, such as the Schering bridge or transformer ratio-arm bridge. Instruments of this type normally have the means for determining the capacitance value as well as the loss factor of the insulation under test.

Along with the bridge, an ac power supply and standard capacitor (or equivalent) are required for measurement of loss factor. Portable test systems that include bridge, power supply and capacitor in one enclosure are available for field testing.

Portable instruments suitable for field measurements are available from a number of test equipment manufacturers. These instruments vary in physical size, circuitry, test voltage, and operating procedures.

The operator of the test equipment should be completely familiar with the operation of the instruments and all safety procedures before attempting to perform these measurements.

6.1.6.5 Test voltage

Dielectric loss tests can be performed at any voltage within the normal operating range of the equipment under test. It may not be practical to perform a power factor test at rated voltage on high-voltage equipment in the field. To keep power supply requirements to a minimum, the test equipment is usually designed to perform the tests at reasonable voltage and current levels allowing the test equipment to be portable.

Test voltages for a typical field test set range from below 100 V to as high as 12 kV. Field tests on most electrical equipment, however, are usually performed at rated voltage or a maximum of 10 kV. Manufacturer's instruction manuals and appropriate test standards should be consulted for operating procedures.

6.1.6.6 Environmental factors

It is important to record ambient conditions at the time of testing for reference when comparing test records. The loss factor of an insulation can be sensitive to variations in temperature, in which case a correction factor will need to be applied to measured values. This is done to allow comparison of tests performed at different temperatures. The reference temperature commonly used is 20 °C. Correction factors are available from equipment manufacturers, testing companies, test equipment manufacturers, and consensus standards for various types of electrical apparatus and insulation.

Testing at temperatures below freezing should be avoided, since this could significantly affect the measurement. Among the primary reasons for performing this test is the capability of detecting moisture in insulation. The electrical characteristics of ice and water are quite different and it is much more difficult to detect the presence of ice than it is to detect water; sometimes it is impossible.

Other environmental factors, such as relative humidity and precipitation at the time of testing, should also be recorded for future reference. A very small amount of water vapor on the surface of external insulation could increase the amount of leakage current and will appear as increased loss in the test results. This is especially a factor for lower voltage equipment where the bushing creepage distance is short. For this reason, testing during periods of high humidity or precipitation should be done with care; otherwise, it will make proper evaluation of the test results very difficult.

Copyright The Institute of Electrical and Electronics Engineers, Inc.
Provided by IHS under license with IEEE
No reproduction or networking permitted without license from IHS Not for Resale

6.1.6.7 Measurements

Each capacitor (insulation section) in a complex insulation system should be tested separately. The determination of the characteristics of the individual components of a complex system is valuable in detecting and locating defective insulation in the system. Individual components can be tested using a combination of measurements and calculations; however, direct measurement of each component is recommended for greatest accuracy. Refer to annex A for recommended test connections.

6.1.6.8 Test procedure

The electrical apparatus to be tested shall be isolated.

A visual inspection of the apparatus should be performed to identify external damage or unusual conditions.

The type of insulating system that will be tested (simple or complex) should be determined, along with the appropriate connections to the test equipment that will be required.

The desired measurements should be performed following the operating instructions supplied with the test equipment. The lead connections may have to be changed several times, depending on the complexity of the apparatus and the test equipment.

Apparatus nameplate data and all measurements should be recorded.

Interpretation: While standard or accepted values for dielectric loss have not been established for all types of electrical apparatus, there are established values for some apparatus such as oil-impregnated paper-insulated systems. Even with this, one of the most useful methods of evaluating test results is by comparison.

A meaningful evaluation will include comparison to previous test results on the same equipment, whenever available. This may include manufacturer's results taken at the factory and/or nameplate data. Comparison of test results to those for similar pieces of equipment, especially those tested under the same conditions, is also beneficial.

In the case of new oil-filled transformers and reactors, the power factors should not exceed 0.5% (20 °C). There should be reasonable justification by the supplier for values in excess of this. If the higher values are caused by materials with an inherently high power factor, their replacement should be encouraged because of their masking effect on an otherwise valuable test. It is not advisable to energize a transformer received with a power factor in excess of 0.5% without complete internal inspection, consultation with the manufacturer, and drying or other correction, as indicated.

The power factors recorded for routine overall tests on older apparatus provide information regarding the general condition of the ground and interwinding insulation of transformers and reactors. They also provide a valuable index of dryness, and are helpful in detecting undesirable operating conditions and failure hazards resulting from moisture, carbonization of insulation, defective bushings, contamination of oil by dissolved materials or conducting particles, improperly grounded or ungrounded cores, etc. While the power factors for most older transformers will also be <0.5% (20 °C), power factors between 0.5% and 1.0% (20 °C) may be acceptable; however, power factors >1.0% (20 °C) should be investigated.

6.1.7 Induced voltage test

6.1.7.1 General

This test may be, but seldom is, performed following installation to determine the suitability of a power transformer for service with regard to its dielectric strength and to detect the existence of partial discharge (PD) if present. This test may be performed on transformers that have undergone repairs or modifications.

Copyright The Institute of Electrical and Electronics Engineers, Inc.
Provided by IHS under license with IEEE
No reproduction or networking permitted without license from IHS
Not for Resale

Generally speaking, an induced voltage test is restricted to large extra-high voltage transformers, but may be performed on any class of transformers. This is due primarily to the time and cost involved with performing the test. It is also due to the fact that transformers in the lower voltage classes do not experience the electrical stresses to their insulation structures as do those of the higher voltage classes.

Field testing for diagnostic purposes may take place in a station, and it may not be possible to de-energize adjacent equipment. The difficulty in being able to achieve low enough ambient PD or radio influence voltage (RIV) values to allow interpretation of results should be factored into the decision of whether to use this costly procedure in the field.

Errors in repairs or installation, if left undetected, may cause serious damage to power transformers when energized. One of the requirements of an induced voltage test is to energize the unit at a higher than normal voltage. This forces any PD source to become active, allowing it to be measured and located. To accomplish this, it is necessary to perform the test at a frequency high enough above the normal operating frequency to avoid core saturation.

Testing is done by utilizing a motor-generator set that provides the necessary voltage at a frequency typically in the range of 180–400 Hz. Step-up transformers are used to increase the generator output to the appropriate test levels for the transformer under test. The transformer under test usually represents a capacitive load at the test frequency and, by incorporating a parallel compensating reactor in the test circuit, the power rating of the rotating machine can be significantly reduced. In addition, if the reactor is adjusted so that the overall load on the machine is lagging rather than leading, the risk of self-excitation of the machine due to armature reaction can be avoided. This procedure is usually used for three-phase excitation but may also be used for single-phase excitation. Instrumentation should preferably include a power factor meter to check the power factor of the load on the machine. A wide-band PD detector, or, alternatively, one fixed frequency RIV meter, one ultrasonic detector, and an induced-voltage frequency meter may be used. Further information on test equipment and procedures is given in IEEE Std C57.12.90-1993 and IEEE Std C57.113-1991.

An alternative procedure is based on the phenomenon of series resonance. In this method the transformer under test is tested one phase at a time. The technique utilizes a variable tuning reactor connected in series between the auxiliary step-up transformer and the low-voltage winding of the transformer under test. Since large transformers usually present capacitive loads at the test frequency, the tuning reactor is adjusted until resonance occurs. The voltage across the tuning reactor will, consequently, increase and, therefore, the voltage applied to the transformer under test will also increase. By adjusting the generator output voltage, the required test voltage is then induced in the winding under test. If the transformer under test is not sufficiently capacitive at the test frequency, the circuit can still be made to resonate by connecting a suitable external capacitor across the low-voltage winding of the transformer.

6.1.7.2 Preliminary test procedures

Low-voltage tests (insulation resistance, power factor, ratio, oil dielectric, etc.) should be performed to determine if the insulation of the transformer under test is suitable for energization. The insulating fluid should be sampled following prescribed procedures (refer to ASTM D 923-91) and its total dissolved gas-in-oil level analyzed to ensure that it is acceptable. A moisture content test of the oil should be made to ensure that excessive amounts do not exist. A turns ratio test should be performed to confirm that the transformer's tap changer for de-energized operation is properly positioned and that shorted winding turns do not exist.

Interpretation: See table 1.

6.1.7.3 Special precautions before test

In preparation for the test, all high-voltage bushings should be fitted with corona rings of sufficient size, so as to eliminate all possibilities of air corona discharges. To prevent corona on the ground side, all sharp edges and points on top of and close to the transformer tank should be masked by covering them with

Copyright The Institute of Electrical and Electronics Engineers, Inc.
Provided by IHS under license with IEEE
No reproduction or networking permitted without license from IHS Not for Resale

Table 1—Recommended diagnostic characteristics

Procedure	New transformer	Service-aged transformer
Power factor	< 0.5%	< 2.0%
Total dissolved gas[a]	< 0.5%	< 0.8%
Moisture content	< 10 ppm	< 15 ppm
Turns ratio	Within 0.5% of nameplate	Within 0.5% of nameplate

[a]If units are equipped with nitrogen blankets, total dissolved gas should not exceed 1.0%.

semiconductive inflated tire inner tubes or corona rings galvanically connected to the tank. The smaller protrusions may also be covered with patches of semiconductive putty. All high-voltage bushings should be carefully cleaned and dried. Immediately prior to the test, they should again be wiped dry. No conductive or semiconductive objects should be left ungrounded on the transformer or close to it, as this would produce discharges from floating objects. Therefore, they should either be taken away, when this is possible, or carefully grounded. All current-carrying connections should be very carefully made to ensure good electrical contact as contact arcing may produce unacceptably high PD interference levels.

Any transformer-mounted surge arresters should be disconnected before energizing the transformer in order to avoid arrester damage and limitation of the test voltages due to arrester operation.

6.1.7.4 Power factor pre-test

After connecting the test set to the transformer under test, a pre-test to determine the power factor at the source should first be performed to ensure that the amount of inductive compensation is sufficient to guarantee that the load on the generator is not capacitive as this could lead to dangerous overvoltages due to generator self excitation. To perform this pre-test, a high-voltage bushing of the test transformer should first be temporarily fitted with an external spark gap adjusted to operate at about 50% of the transformer nominal voltage. During this pre-test, the voltage should not be raised above 30% or preferably only at a level high enough to allow fairly accurate power factor measurement. Note that the generator is capable of driving a slightly capacitive load provided that the power margin is sufficient; it is when this margin is exceeded that generator runaway occurs. To be on the safe side, higher than required inductive compensation should first be used and it should be adjusted to a value that will allow the test to be done at full test voltage without exceeding the generator limits as this would cause generator protection tripping. The user should therefore be absolutely sure that the generator has a sufficient power margin to reach the maximum test level without danger of tripping. It is also important that the ratio of the step-up transformer used to match the voltage output of the generator to that of the transformer under test be as close as possible to the required value. This will ensure maximum power transfer from the generator to the transformer under test. A variable ratio transformer is recommended. After the pre-test has been performed and the reactive compensation has been adjusted properly, the temporary spark gap should be removed and the voltage can then be taken to the test level.

6.1.7.5 Induced voltage test

This test should be performed on a clear day. All outside interferences such as operating cranes and motorized vehicles should be kept clear of the test site for successful interpretation of test results.

The test voltage level and duration for field tests are usually subject to negotiation and may vary from initial factory levels for new transformers to lower levels depending on the age and history of the transformer.

Copyright The Institute of Electrical and Electronics Engineers, Inc.
Provided by IHS under license with IEEE
No reproduction or networking permitted without license from IHS
Not for Resale

After connecting the test set to the transformer under test and calibrating the instrumentation, the voltage should be slowly raised to the test level. Instrumentation should be carefully observed throughout the test and PD or RIV levels recorded at 5 min intervals. Peaks observed between recording times should also be noted. Any wildly erratic readings may be cause to immediately terminate testing until the cause is determined.

If PD or RIV levels exhibit a tendency to continue to increase in latter stages of testing, continue the test until the level stabilizes or begins a downward trend.

Interpretation: PD levels above 500 pC or RIV levels above 100 μv may be indicative of a substantial problem.

6.1.8 Partial discharge detection

6.1.8.1 General

PD (often referred to as corona) in an insulation system occurs when a local breakdown of the insulation medium causes a redistribution of charge within the system. The breakdown is localized and does not bridge the distance between the electrodes that set up the electric field. Generally, the PD events of interest occur within the insulation at the site of a void or foreign material such as water, or at a location where damage or misuse has occurred. This type of discharge can cause further degradation of the insulation in its vicinity and lead to eventual failure of the apparatus.

PDs generate low-amplitude current pulses that are of short duration. Two different techniques are in common use to detect and measure these signals. One technique consists of measurements with a radio-noise meter. Levels are measured in microvolts and are referred to as RIV signals. The other method consists of measurements with a PD detector. These signals are measured in picocoulombs.

The RIV and PD signals can be thought of as very small (low-amplitude), high-frequency pulses superimposed on the high voltage. Successful testing requires that suitable precautions be taken to ensure that these small signals can be detected. All conducting objects that may be in the high-voltage field should be solidly grounded and any objects that have sharp points or corners (e.g., bolts, tank headers, etc.) should be shielded with conductive material that has a smooth geometry. Current carrying connections should be clean and secure.

6.1.8.2 Radio influence voltage (RIV)

The RIV signals are usually obtained from the bushing capacitance tap as shown in figure 8. The variable inductance is tuned with the bushing tap-to-ground capacitance at the measuring frequency of the radio noise meter. The coaxial cable, which may be of any suitable impedance, should be in the circuit when the tuning is performed. The purpose of the tuning is to minimize the dividing effect of the bushing capacitance. The coaxial cable need not be terminated in its characteristic impedance. The system has to be calibrated for each test setup for accurate results. A common means of calibration is to apply to the high-voltage terminal a radio-frequency signal of known amplitude whose frequency is equal to the mid-band frequency of the detector to be used. The calibration of the detector itself should be carried out according to the manufacturer's recommendations. Mid-band frequencies in the range of 0.85–1.15 MHz are normally used. However, other frequencies may be used if interference from radio broadcasting stations is present.

The circuit is calibrated before it is energized. The high-voltage source is normally turned on at zero to low voltage and brought up to the desired test voltage slowly. The detector should be monitored as the voltage is increased. Obtained readings should be recorded. Noise readings on the detector meter at low voltage indicate interference, either radiated or coupled into the circuit from external sources. If this interference cannot be eliminated, it sets the limit of sensitivity for meaningful test results. In practice, an experienced operator can identify and ignore some noise if it originates from a known source other than the test object.

Copyright The Institute of Electrical and Electronics Engineers, Inc.
Provided by IHS under license with IEEE
No reproduction or networking permitted without license from IHS Not for Resale

Interpretation of RIV test results requires some experience with RIV tests in general and with the type of device being tested in particular. Since this is a narrow-band test technique, it is subject to possible resonances in the test object. The quasi-peak response of the detector also makes the response dependent on the repetition rate of the RIV impulse (for repetition rates below about 1000 pps). Interpretation of the results of this type of testing is best carried out in the context of previous measurements on the same piece of apparatus, including factory tests. Standards on particular classes of apparatus may offer some guidance on this subject.

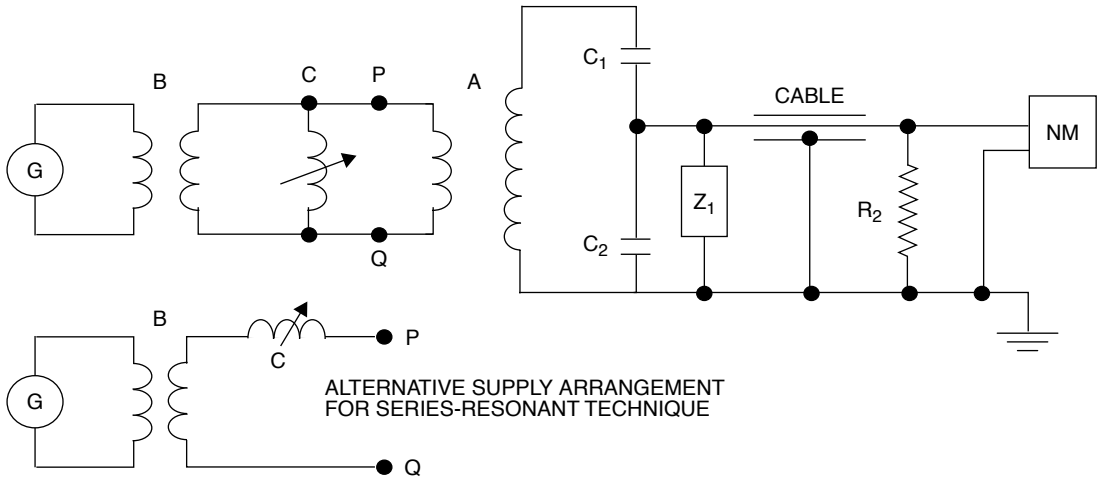

A =Transformer under test
B = Auxiliary step-up transformer
C = Variable reactor
G = Supply generator
C_1 = High voltage bushing capacitance
C_2 = High voltage bushing capacitance tap
Z_1 = Variable inductance
R_2 = Resistor
CABLE = Shield cable
NM = Radio noise meter

Figure 8—RIV measurement using bushing tap

6.1.8.3 Partial discharge (PD)

As in the case for RIV measurements, the PD signals to be measured are obtained from the bushing capacitance tap. A typical circuit arrangement is shown in figure 9. The measurement impedance *Zm* is usually complex and serves to filter out the test frequency from the signals to be measured by the PD detector.

The sensitivity of the system depends on the capacitance of the coupling capacitor, the capacitance of the test object, and stray capacitances of the test circuit. This requires the system to be calibrated for each test setup for accurate results. For this reason, commercial PD detectors are supplied with a pulse generator to perform the calibration. A common means of calibration is to inject a known amount of charge into the high-voltage terminal and adjust the PD detector sensitivity to provide the proper reading. In practice this is done by coupling a voltage pulse to the high-voltage bus via a small (100 pF) capacitor.

The setup should be calibrated for the reasons discussed above. If a low voltage calibration capacitor is used, the circuit should be calibrated before it is energized and the low voltage capacitor should be removed during the test. The operator's manual for the PD detector being used should be consulted for detailed calibration procedures.

The high-voltage source is normally turned on at zero to low-voltage and brought up to the desired test voltage slowly. The PD detector should be monitored as the voltage is increased and the readings obtained should be recorded. Noise on the PD detector display at low-voltage indicates interference, either radiated or coupled into the circuit from external sources. If this interference cannot be eliminated, it sets the limit of sensitivity for meaningful test results. In practice, an experienced operator can identify and ignore some noise if it originates from a known source other than the test object.

Copyright The Institute of Electrical and Electronics Engineers, Inc.
Provided by IHS under license with IEEE
No reproduction or networking permitted without license from IHS
Not for Resale

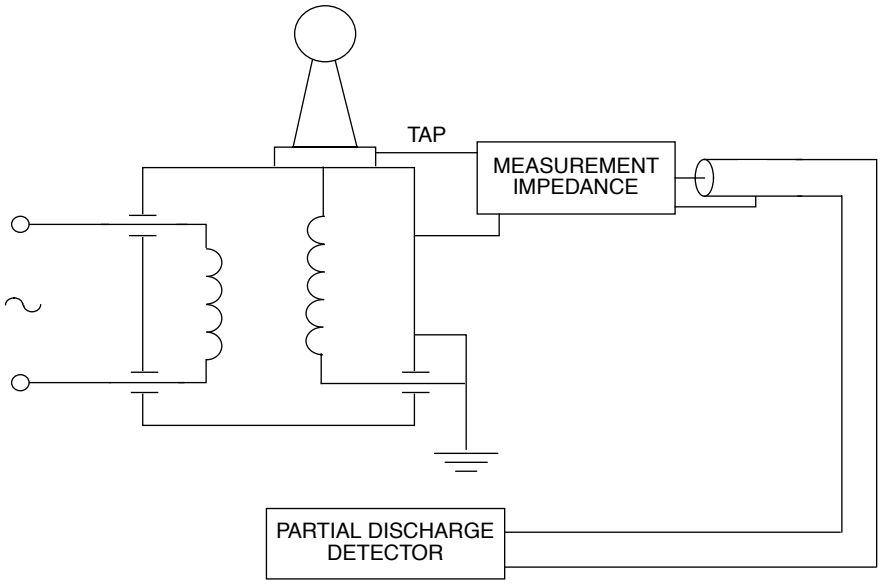

Figure 9—Partial discharge measurement circuit using bushing tap

Typically, PD signals will not be present at low voltage but will appear suddenly at a voltage known as the PD inception voltage. As the voltage is raised beyond this inception voltage, more pulses will appear and may grow in amplitude. When the voltage is reduced, a hysteresis effect may be noticed in which the PD pulses do not extinguish until the voltage has been reduced significantly below the inception voltage. The voltage at which PD has disappeared is known as the PD extinction voltage.

Interpretation of PD test results requires some experience with PD tests in general and with the type of device being tested in particular. Some types of PD signals can be readily identified and this is helpful in troubleshooting the test setup. Specifically, PD-like signals that are in phase with the applied voltage are probably caused by a faulty current-carrying connection in the circuit. This should be corrected before proceeding. An unsymmetrical display on the PD detector cathode-ray tube usually indicates a corona source discharging into the air. This is caused by a sharp point on the buswork or at ground potential.

These sources can usually be identified by visual inspection of the area or with the aid of an ultrasonic pickup device.

IEEE Std C57.113-1991 should be consulted for additional guidance regarding calibration and measuring techniques together with information on the interpretation of results.

6.1.8.4 Acoustic techniques

Acoustic detection of PD has been in use for testing transformers for many years. This method offers good sensitivity to some types of PD sources and permits the site of the PD to be located in some situations. Acoustic techniques have the advantage that they can be used on energized equipment and these methods are not susceptible to interference from outside sources when properly applied. However, the sensitivity to discharges originating deep within the insulation structure is low, for example, in the inner sections of a transformer winding.

Acoustic signals are usually measured using a transducer that is coupled to the wall of the transformer tank. Special attention should be given to the coupling method used since reflections at the interface between enclosure and transducer can substantially reduce the transmitted signal.

--`,,```,,,,````-`-`,,`,,`,`,,`---
Copyright The Institute of Electrical and Electronics Engineers, Inc.
Provided by IHS under license with IEEE
No reproduction or networking permitted without license from IHS Not for Resale

The test equipment required for acoustic PD detection consists of a source of high voltage (if the test object is not energized), an ultrasonic transducer, an amplifier, and a display device that constitutes the detector.

Self-contained, portable acoustic detectors are available for field test applications. More specialized measurements may require custom-designed equipment especially in the method of coupling the transducer to the test object. Usually general purpose amplifiers and/or oscilloscopes can be utilized for these applications. Ultrasonic piezoelectric transducers with a response in the range of 20–200 kHz are usually used as the pick-up device.

Procedures used and interpretation of results vary widely depending on the apparatus under test and the intent of the test program. A quick go-no-go test program may require only the observation of the presence or absence of acoustic signals in a particular piece of apparatus using a simple self-contained acoustic transducer/detector. On the other hand, location of possible problems in large, expensive equipment may require, and will justify, an extensive test program that is carefully designed based on a thorough understanding of the behavior of acoustic waves in liquids, gases, and solids of various compositions.

6.2 Bushings

6.2.1 General

Bushings vary widely in construction and are essential elements of a transformer. They are relatively inexpensive compared to the cost of a transformer. However, their failure may result in the total destruction of the transformer. Bushings should therefore be checked regularly and if evidence of deterioration is found, they should either be repaired or replaced depending on the type and degree of deterioration. Although there are many different types of construction, many of the diagnostic tests are common and are described below.

6.2.2 Visual inspection

Some visual examination can be performed while the transformer is energized. The use of binoculars can reveal such defects as cracked or broken porcelains, leaking gaskets, and oil level. It is helpful to note the ambient temperature and if possible, the load current at the time of observation.

More detailed visual inspection can be carried out when the transformer is de-energized. In addition to the items described above, closer examination can reveal hair-line cracks, deterioration of cemented joints, and surface contamination. If the porcelain housing is broken, consideration of how it is broken should be made. A simple shed break is of minor concern. Unglazed porcelain does not constitute any immediate danger, since electrical grade porcelain is not porous and will not absorb moisture. If a crack or discontinuous, broken surface appears to enter or point to the main body of the bushing housing, closer examination is recommended. Cracks appearing to extend into the main body can grow and eventually cause failure. In such a case, the bushing should be replaced as no effective field repair is possible.

6.2.3 Oil level

A check should be made of the oil level in the sight glass or oil gauge. Consideration of ambient temperature should be made for proper assessment of oil level. A common mistake is to add oil in colder temperatures to bring the oil level to normal levels. The normal level is usually made for ambient temperatures of 20 °C. Adding oil at lower temperatures results in overfull conditions when temperatures increase to summertime conditions. All oil fill plugs, etc., should be replaced after the inspection to prevent the entrance of contaminants. If the sight glass allows, an examination of the insulating fluid for waxing or contamination should be made.

6.2.4 Capacitance, power factor, and dissipation factor

The capacitance and power factor (or dissipation factor) of the C_1 and C_2 capacitors should be measured (see annex B). Short-circuited capacitor sections can be detected by an increase in capacitance. The presence of moisture or other contaminants can usually be detected by an increase in power factor. Temperature

Copyright The Institute of Electrical and Electronics Engineers, Inc.
Provided by IHS under license with IEEE
No reproduction or networking permitted without license from IHS
Not for Resale

corrections should be made during the measurements. When performing tests on the C_2 capacitance, care should be taken not to exceed the test voltage of the tap. It should be noted that the power factors of the C_1 and C_2 capacitances may be considerably different from each other and it is not uncommon for the C_2 capacitance to be ten times greater than that of the C_1 capacitance. Note that moisture or surface contamination should be removed before performing power factor measurements. The hot collar test is a particularly useful procedure that can be used to assess the condition of a specific small section of the bushing insulation between an area of the upper porcelain and the central current-carrying conductor. It is performed by energizing one or more temporary electrodes (collars, usually of semiconducting rubber) placed around the outside of the porcelain with the central conductor grounded. This type of test may be used to locate cracks in porcelain, degradation of insulation inside the upper section of the bushing, low compound or liquid level, and voids in the compound.

Power factor limits are published by the manufacturers and many bushings have the factory power factors stamped on the nameplate. Field measurements should be compared with the nameplate values. Bushings that exhibit a continued increase in power factor over a period of several years should be investigated further and possibly removed from service. In practice, if the power factor of capacitance-graded bushings exceeds 1%, the user should seek further specialized help.

6.2.5 Partial discharge (PD)

6.2.5.1 General

Prolonged PD activity in the internal insulation of a bushing will gradually reduce its dielectric strength and eventually result in failure. The presence of corona is detected by either PD or RIV, measurements which, of necessity, are performed at high voltage, usually line-to-ground voltage or higher (e.g., 130–150%).

These measurements may be made during an induced voltage test on the transformer. However, if PD is detected during this test, it cannot be determined if it originates from the bushing or from within the transformer. For this reason, if PD or RIV measurements are required, it is preferable to remove the bushing from the transformer and test it alone. This test is performed with the bushing in a special tank using a high-voltage test source.

6.2.5.2 Test equipment

The test equipment required for a PD test on the bushing by itself consists of a source of high voltage, a PD detector or radio-noise meter, a coupling capacitor to couple the measuring instrument to the high voltage bus, and a calibration system.

The high-voltage source may be a transformer or a series-resonant test set that is free of PD.

The purpose of the coupling capacitor is to separate the low-level PD pulse from the high voltage on the bus and couple this pulse to the detector. This capacitor should be rated for the voltage at which the test is performed and should be discharge-free. Values of 1000 pF have been found to be satisfactory.

PD activity can be measured by means of a PD detector or a radio-noise meter. Both types of instruments are commercially available. However, PD detectors are usually supplied with an oscilloscope display on which the PD pulse activity can be observed. This type of display also gives relative phase information, which may be useful in interpreting the results. Radio-noise meters are narrow-band instruments that measure the quasipeak amplitude of the discharge signal. The detector normally used is a tuned radio frequency microvoltmeter. The mid-band frequency of the detector is usually approximately 1 MHz but other frequencies can be selected to eliminate local sources of interference (e.g., AM radio broadcast stations). The bandwidth normally used is 9 kHz.

Copyright The Institute of Electrical and Electronics Engineers, Inc.
Provided by IHS under license with IEEE
No reproduction or networking permitted without license from IHS Not for Resale

6.3 Insulating fluids (transformer-grade mineral oil)

6.3.1 General

Mineral oil is used as an insulating fluid in most types of electrical power equipment. Besides acting as an insulating fluid, in many situations it also acts as a heat transfer medium to carry off excess heat generated by the losses of the power equipment. Tests cover the determination of certain qualities, primarily degradation constituents, in service-aged oil and the diagnosis of these results with respect to the condition of the power equipment it is contained in (see IEEE Std C57.106-1991 and ASTM D 117-89).

Sampling techniques for these test methods (refer to ASTM D 923-91) should ensure that the specimen taken is representative of the insulating fluid contained within the equipment. Natural contaminants exist within the body of sampling valves; therefore the valves should be flushed before the extraction is performed in order to ensure that sample integrity is maintained.

Confirmation that a positive tank pressure exists should be made before attempting to obtain a sample. Failure to do so may result in a gas bubble entering the tank and becoming lodged between turns in the windings. This condition may result in the premature failure of the equipment.

A sufficiently large sample should be withdrawn to cover all of the tests described in 6.3. Typically 1 L should be enough. See ASTM D 923-91 and ASTM D 3613-92 for information regarding containers and sampling procedures. For tests where only some of the oil characteristics are to be checked, the quantities in table 2 are suggested.

Table 2—Minimum volumes of fluids for each test

Test	Standard	Quantity of fluid (mL)
Acidity	ASTM D 974-92	20
Color (field)	ASTM D 1524-84	10
Dielectric	ASTM D 877-87	75
Dielectric	ASTM D 1816-84a	500[a]
Dissolved gas	ASTM D 3612-93	50[a]
Interfacial tension	ASTM D 971-91	20
Interfacial tension	ASTM D 2285-85	15
Particle count	N/A	100
Power factor	ASTM D 924-92	250
Polychlorinated biphenyl	ASTM D 4059-91	10
Sludge	ASTM D 1698-84	50
Water content	ASTM D 1533-88	50
Visual	Same as color above	
Specific gravity	ASTM D 1298-85	125[a]
Color (lab)	ASTM D 1500-91	125
	Total:	1400

[a]The quantities listed above have generally been found to be needed for the test procedures. Since some equipment manufacturers make larger containers, the test laboratory should be consulted prior to sampling to ensure that the sample volume is adequate.

Copyright The Institute of Electrical and Electronics Engineers, Inc.
Provided by IHS under license with IEEE
No reproduction or networking permitted without license from IHS
Not for Resale

In most cases, the sample should be transported to the laboratory in a clean, dry container. Prolonged exposure to direct sunlight or contamination by excessive atmospheric moisture should be avoided. Many of the levels for measurements specified in 6.3 are not standardized. However, the values quoted have been found to be practical and are commonly used.

Oils in service may be placed in the following classifications based upon the evaluation of the following significant characteristics:

a) *Group I*. Oils that are in satisfactory condition for continued use
b) *Group II*. Oils that require only reconditioning for further service
c) *Group III*. Oils in poor condition (such oil should be reclaimed or disposed of depending upon economic considerations)
d) *Group IV*. Oils in such poor condition that it is technically advisable to dispose of them

All tests should be performed at least annually, but more often if the equipment is strategically located in the system.

6.3.2 Acidity, neutralization number (NN)

This test is performed to determine the acidic degradation constituents in service-aged oil.

This test should be used to indicate the relative change in an oil during use under oxidizing conditions. Acidity (neutralization) is gauged by a neutralization number (NN), which is expressed in the number of milligrams of potassium hydroxide required to neutralize the acid in a gram of oil. Transformer grade mineral oil contains only trace levels of acidic constituents when new and its NN increases as degradation of the oil occurs. A used oil having a high NN indicates that the oil is either oxidized or contaminated with materials such as varnish, paint, or other matter. This condition may be indicative of sludge formation. There should be no direct correlation between the NN and the corrosive tendency of the oil towards metals in electrical power equipment. Organic acids are detrimental to insulation systems and can induce oxidation of metals when moisture is also present. Changes occur over long periods of time. Levels are not indicative of a problem in the equipment, but of a potential threat to the internal components of the equipment. Empirical values exist with respect to condemning limits for operation of the equipment, as well as continued use of the oil (refer to ASTM D 974-92).

In a laboratory environment, a color indicator titration test should be performed, following ASTM D 974-92. The NN of the sample should be calculated according to this same procedure. Maximum recommended values of NN for different categories of oil are given in table 3.

Table 3—Suggested limits for in-service oils by group and voltage class

Type of oil	Voltage class (kV)	Acid number (mg KOH/g, max)
New oil as received from refinery		0.03
Serviced aged oil—Group I	<69	0.2
	69–288	0.2
	>345	0.1
Serviced aged oil—Group II		0.2
Serviced aged oil—Group III		0.5

Copyright The Institute of Electrical and Electronics Engineers, Inc.
Provided by IHS under license with IEEE
No reproduction or networking permitted without license from IHS Not for Resale

6.3.3 Color

This test is performed to determine the color of service-aged oil.

This test should be used to indicate the relative change in an oil during use. Color is expressed by a numerical value (also, a color description) based on comparison with a series of color standards. There should be no direct correlation between a change in the color of the oil and a specific problem within the equipment. Changes normally occur over long periods of time. A rapidly increasing number should be indicative of a dramatic change in operating condition and generally precedes other indications of a problem. A high color number occurs in combination with the presence of oil deterioration or contamination or both. Empirical values exist with respect to condemning limits for operation of the equipment, as well as relative condition (refer to ASTM D 1500-91).

A visual test should be performed, following ASTM D 1524-84. The ASTM color for the sample should be determined using this procedure.

Interpretation: See table 4.

Table 4—Relative condition of oil based on color

Color comparator number	ASTM color	Oil condition
0.0–0.5	Clear	New oil
0.5–1.0	Pale yellow	Good oil
1.0–2.5	Yellow	Service-aged oil
2.5–4.0	Bright yellow	Marginal condition
4.0–5.5	Amber	Bad condition
5.5–7.0	Brown	Severe condition (reclaim oil)
7.0–8.5	Dark brown	Extreme condition (scrap oil)[a]

[a]Retest to confirm reading prior to scrapping oil.

6.3.4 Dielectric strength

This test is performed to determine the dielectric breakdown voltage of service-aged oil.

There are two commonly used methods to determine the dielectric breakdown voltage of oil. ASTM D 1816-84a, which utilizes spherical capped electrodes of the Verband Deutscher Elektroechniker (VDE) type in its test cell, is recommended primarily for filtered, degassed, and dehydrated oil prior to and during filling of electrical power equipment rated above 230 kV, or for testing samples of such oil from this equipment after filling. ASTM D 877-87, which utilizes flat electrodes, is recommended for all other apparatus, which is by far the majority of all electric power equipment. For this reason, 6.3.4 will concentrate primarily on this latter test. By-products of contamination and deterioration generally reduce the dielectric strength of oil. The dielectric breakdown voltage of oil is important to measure the oil's ability to withstand electrical stress without failure. High dielectric strengths do not indicate the absence of all contaminants. There should be no direct correlation between a certain breakdown voltage and failure, except in extreme cases. Empirical values exist with respect to condemning limits for operation of the equipment, as well as, relative condition (refer to ASTM D 877-87 and ASTM D 1816-84a).

--`,,```,,,-`-`,,`,,`,`,,`---
Copyright The Institute of Electrical and Electronics Engineers, Inc.
Provided by IHS under license with IEEE
No reproduction or networking permitted without license from IHS
Not for Resale

This test may be satisfactorily performed in the field, but is more controllable in a laboratory environment. A visual test should be performed to ensure that the sample does not contain free water or air bubbles caused by agitation during transport. Either ASTM D 877-87 or ASTM D 1816-84a should be followed as appropriate. The breakdown voltage for the sample should be determined using this procedure. See also IEEE Std 637-1985.

Interpretation: ASTM D 877-87

Minimum dielectric breakdown voltage (kV)	Equipment class (kV)
26	≤69
26	>69–288
26	≥345

Interpretation: ASTM D 1816-84a, (0.040 in gap)

Minimum dielectric breakdown voltage (kV)	Equipment class (kV)
23	≤69
26	>69–288
26	≥345

6.3.5 Dissolved gas

This test is performed to determine the dissolved gas components in service-aged oil.

This test should be used to determine the amount of specific gases generated by an oil-filled in-service transformer. Certain combinations and quantities of these generated gases are frequently the first indication of a possible malfunction that may eventually lead to failure if not corrected. Arcing, PD, low-energy sparking, severe overloading, and overheating in the insulation system are some of the mechanisms that can result in chemical decomposition of the insulating materials and the formation of various combustible and noncombustible gases dissolved in the oil. Normal operation may also result in the formation of some gases, but not to the same extent as when a malfunction exists. Empirical values exist with respect to condemning limits for operation of the equipment, but these values are not necessarily conclusive of an impending failure. Diagnostic routines also exist to help interpret the probable cause of the gassing (refer to ASTM D 3612-93 and IEEE Std C 57.104-1991).

Precautions: The sample should preferably be obtained using a clean, moisture-free, gas-tight container to isolate it from excessive atmospheric moisture and to maintain its quantity of dissolved gases. Care should be taken to purge the container of all free gas at the time the sample is taken. See ASTM D 36l3-92 for additional guidance.

This test should be performed in a laboratory environment. ASTM D 3612-93 should be followed for extraction and analysis of key dissolved gases. After determining the quantities of key dissolved gases from the sample using this procedure, a prescribed diagnostic routine to assist in interpretation of the analysis should be followed.

--`,,`,,,,-`-`,,`,,`,`,,`---
Copyright The Institute of Electrical and Electronics Engineers, Inc.
Provided by IHS under license with IEEE
No reproduction or networking permitted without license from IHS Not for Resale

Interpretation: Refer to IEEE Std C57.l04-1991, tables 1, 2, and 3.

It can be difficult to determine whether or not a transformer is operating normally if it has no previous dissolved gas history. Also, considerable differences of opinion exist for what is considered a "normal transformer" with acceptable concentrations of gases.

6.3.6 Interfacial tension (IFT)

This test is performed to determine the interfacial tension of service-aged oil against water.

This test method should be used to indicate the interfacial tension between an electrical insulating oil and water. This is a measurement of the molecular attractive force between their unlike molecules at the interface. This test provides a means of detecting soluble polar contaminants and products of deterioration in the oil. There is a unique relationship between IFT and NN in that the NN of the oil increases and the IFT decreases as an oil oxidizes. To a certain extent the IFT is a measure of the remaining useful life of the oil, short of its being reclaimed. Levels are not indicative of a problem in the equipment, but of a potential threat to the future operating condition of the equipment. Empirical values exist with respect to condemning limits for operation of the equipment as well as continued use of the oil (refer to ASTM D 971-91 and ASTM D 2285-85).

This test may be satisfactorily performed in the field, as well as in a laboratory environment. Generally ASTM D-971 should be followed in the laboratory and should determine the interfacial tension for the sample using the procedure. ASTM D 2285-85 should be followed in the field. See also IEEE 57.106-1991.

Interpretation: Recommended minimum levels of IFT for different conditions of oils are shown in table 5.

Table 5—Suggested limits for in-service oils by group and voltage class

Type of oil	Voltage class (kV)	Interfacial tension, dynes/cm, min
New oil as received		40
New oil received in new equipment		35
New oil after filling and standing, prior to energizing		35
Service aged oil	≤69	24
	69–288	26
	>345	30
Oil to be reconditioned or reclaimed—Group II		24
Oil to be reconditioned or reclaimed—Group III		16

6.3.7 Particle count

This test is used to determine the number, size and, to a degree, the composition of particles present in service-aged oil.

This test may be used to indicate contamination of the oil with particulate matter. The quantity of the particles in an oil can be correlated with such factors as dielectric breakdown voltage and can affect the oil's

Copyright The Institute of Electrical and Electronics Engineers, Inc.
Provided by IHS under license with IEEE
No reproduction or networking permitted without license from IHS
Not for Resale

power factor. The type of particles and the quantity present will also influence these characteristics. The presence of excessive metal particles has been used as an indicator of bearing wear when the equipment utilizes cooling pumps. There are no empirical values that exist with respect to condemning limits for operation of the equipment or continued use of the oil.

Precautions: The sample should be taken when the relative humidity is <50% and should be obtained preferably using a clean, moisture-free container to isolate the sample from excessive atmospheric moisture and outside particle contamination.

After obtaining the sample in a clean 50–100 mL container, it should be transported to a laboratory for analysis. Special containers are available that have been cleaned to reduce particulate contamination. This test cannot be performed in the field. Determination of the particle count of a sample can be obtained using a light-scattering beam device. The device manufacturer's instructions should be followed for proper analysis. If diagnosis of the type of particles in the sample is desired, the use of a particle counter is preferred; however, an optical microscope may be helpful in identifying particles. Elemental analysis can be performed by complementary methods. Other tests should be made to determine if the particles are metallic and if they are magnetic. This analysis can be performed in a number of ways including the use of ferrography.

Interpretation: The number of particles in the range of 3–150 μm/10 mL of oil are counted. The following table indicates approximate particulate contamination levels for different ranges of particle counts.

Relative number of particles per 10 mL of oil	Relative condition
<1500	Normal
1500–5000	Marginal
>5000	Contaminated

NOTE—Many believe that the quantity of particles and their composition are significant only in their relation to previous levels and types. Trends observed may be significant to determine if excessive cooling pump bearing wear is being experienced. Other types of deterioration, such as may be indicated by the presence of cellulosic particles, copper, etc., may be less indicative of problems within the equipment since generally only those particles that are small enough to remain in suspension in the oil will be observed. Larger (heavier) particles are rarely ever seen since they have a tendency to fall to the bottom of the equipment's tank and are not available to be sampled or are removed in the flushing of the valve. Some agitation by ultrasonic techniques is recommended before performing the particle count.

6.3.8 Power factor

This test covers the determination of the power factor of new and service-aged oil.

This test should be used to indicate the dielectric losses in oil when used in an alternating electric field and to indicate the energy dissipated as heat. Power factor is the ratio of the power dissipated in the oil in watts to the product of the effective voltage and current in voltamperes, when tested with a sinusoidal field under prescribed conditions. A low power factor indicates low dielectric losses. It is useful as a means to ensure that sample integrity is maintained, and as an indication of changes in quality resulting from contamination and deterioration in service or as a result of handling. Oil samples that are defective often pass other standard electrical and chemical tests, yet fail this test. Empirical values exist with respect to condemning limits for operation of the equipment (refer to ASTM D 1524-84).

This test may be satisfactorily performed in the field, as well as in a laboratory environment. A visual test should be performed to ensure that the sample does not contain air bubbles due to agitation during transport. After allowing the specimen to settle in the test cell, ASTM D 924-82b should be followed in a laboratory. In

Copyright The Institute of Electrical and Electronics Engineers, Inc.
Provided by IHS under license with IEEE
No reproduction or networking permitted without license from IHS Not for Resale

the field, the recommendations of the test equipment manufacturer should be followed. The percent power factor value for the sample should be determined using these procedures and should be corrected to 20 °C for a field test. In a laboratory, tests are typically performed at 25 °C and 100 °C.

Interpretation: The maximum recommended levels of percent power factor for different categories of new and service aged oils are shown in table 6.

Table 6—Maximum suggested power factors for different categories of new and service aged oils

Type of oil	Voltage class (kV)	% Power factor at 25 °C	% Power factor at 100 °C
New oil as received		0.05	0.30
New oil received in new equipment	<69	0.15	1.50
	69–230	0.10	1.00
New oil after filling and standing, prior to energizing		0.10	—
Service aged oil—Group I	<69	0.5	
	69–288	0.5	
	≥345	0.5	
Service aged oil—Group II	<69	0.5	
	69–288	0.5	
	≥345	0.3	
Service aged oil—Group III	<69	1.0	
	69–288	0.7	
	≥345	0.3	

The power factor limits given for oil are based upon the understanding that power factor is an indicator test for contamination by excessive water (in combination with particulate matter) or polar or ionic materials in the oil. Most in-service oils have a power factor at 25 °C of <0.2%.

High levels of power factor (>0.5% at 25 °C) in oil are of concern because contaminants may collect in areas of high electrical stress and concentrate in the winding, making cleaning of the transformer difficult and masking changes in winding power factor due to other causes such as changing water content. Very high power factor (>1.0% at 25 °C) in oil may be caused by the presence of free water, which could be hazardous to the operation of a transformer. Whenever there is high power factor in oil the cause should be sought. Oxidation, free water, wet particles, contamination, and material incompatibility are all possible sources of high power factor in oil.

For further information refer to IEEE Std C57.106-1991.

Copyright The Institute of Electrical and Electronics Engineers, Inc.
Provided by IHS under license with IEEE
No reproduction or networking permitted without license from IHS
Not for Resale

6.3.9 Polychlorinated biphenyl (PCB) content

This test covers the determination of the PCB content of service-aged oil.

PCBs are regulated substances in many countries. For this reason it is important to know the present condition of all power equipment with regard to its PCB concentration. A low PCB concentration (<50 ppm) generally indicates an extremely low risk (according to the U.S. EPA) and the oil is classified as non-contaminated. A moderate PCB concentration (≥50 ppm but <500 ppm) causes the oil to be classified as contaminated. Any concentration ≥500 ppm is considered as if it were pure PCB. Because most laws deal with the PCB concentration of the involved fluid, it is most important to be aware of the PCB concentration of all insulating fluids on any given system. Local governmental regulations may require specific values of even <50 ppm.

This testing may be satisfactorily performed in the field, as well as in a laboratory environment. ASTM D 4059-91 should be followed in a laboratory. In the field, there are a number of commercially available screening kits. The expiration date should be checked before proceeding with the test. These types of tests only estimate the PCB concentration and do not give exact numerical values. It is essential that the manufacturer's recommendations be followed precisely when performing the field screening test. This type of test will give a positive indication for all chlorinated compounds whether they are PCB or not. Therefore, care should be taken not to introduce other chlorinated compounds into the procedure.

Interpretation: PCB regulations vary from area to area and state to state. Local regulators should be consulted for appropriate guidelines for particular areas.

6.3.10 Sludging condition

This test covers the determination of pentane-insoluble sludge present in service-aged oil. This test is generally not performed unless IFT is <.026 N/m (<26 dyn/cm) or the NN is >0.15 mg KOH/g oil.

Sludge is a resinous, polymeric-type substance that is partially conductive, hygroscopic, and a heat insulator. If there is water in the transformer, it will be attracted to the sludge. The presence of soluble sludge should be an indication of deterioration of the oil, presence of contaminates, or both. It serves as a warning that there may be formation of sediment. This test should be generally applicable to service-aged insulating oils and the specific test, a portion of ASTM D l698-84, is intended to determine the extent to which the insulating oil has begun to sludge. The test has value in determining the proper procedure for performing maintenance on a transformer. If the oil has not started to sludge or is only sludging slightly, the transformer's oil may be circulated through a filtering (reclaiming) system, thus extending the life of the oil and the transformer. If the oil has progressed into sludging such that sediment exists, more dramatic maintenance procedures may be required, including the removal of the transformer from service and a thorough washing down of the insulation system, tank, and cooling system. This is necessary since sludge (sediment) and moisture will become trapped in cooling systems reducing effective cooling. There is also a possibility that the moisture-laden sludge will collect in critical regions of electrical stress and result in premature failure or, at the least, reduced heat transfer efficiencies.

A 50 mL sample of the transformer's oil should be obtained. Two mL from each sample should be drawn into 20 mL shell vials. The 10 × 1.8 cm size generally will give the best results. Ten mL of n-pentane should be added to the sample which should then be well stoppered and shaken. The sample should then be stored in a cool dark area for 24 h. After storage it should be examined for traces of sludge. The examination is performed by slowly tilting the vial so that a bubble of air runs along the vial to the bottom and causes turbulence. If sludge is present it normally will appear as a dark or cloudy mass at the bottom of the vial. Most sludges are gelatinous clumps or fine particles. If tiny solid particles are visible at the first instant of turbulence in the bottom of the vial, the test is considered positive. If none is observed, the test is negative.

Record as: A) No sludge, B) Light sludge, C) Heavy sludge

NOTE—Tiny, solid particles may not be sludge. They could be clay fines or artifacts.

--`,,```,,,,````-`-`,,`,,`,`,,`---

Copyright The Institute of Electrical and Electronics Engineers, Inc.
Provided by IHS under license with IEEE
No reproduction or networking permitted without license from IHS Not for Resale

Interpretation: The following table indicates the action required depending on the degree of sludge in the oil.

Level of soluble sludge/ sediment in sample	Required action
None	No action is required. Continue to monitor.
Light	Reclaim the oil.
Heavy	The oil should be scrapped. The system should thoroughly flushed and new (or reclaimed) oil should be added.

6.3.11 Visual

This test covers the determination of free water or sediment such as metal particles, insoluble sludge, carbon, fibers, dirt, etc., in service-aged oil, and the analysis and diagnosis of these findings.

If insoluble contaminants are present in the oil, valuable information concerning the condition of the transformer and its components may be obtained by filtering the oil and identifying the residue. This test method may ultimately incorporate a number of other tests such as ASTM D 1500-91 to help in the diagnosis of the potential problem.

This test is primarily designed for estimating, during a field inspection, the color and condition of a sample of oil. Follow procedure ASTM D 1524-84 to obtain results.

Interpretation: Visual examination of oil for ASTM color and the presence of sediment. The oil should be sparkling, bright, and clear.

The observation of cloudiness, particles of insulation, products of metal corrosion, or other undesirable suspended materials, as well as any unusual change in color should be followed up with more precise laboratory examination and analysis for proper diagnosis.

6.3.12 Water content

There is always some moisture present in any practical transformer. In addition, since the paper in the insulation system has a great affinity for water, most of the moisture present will be in the paper.

The dielectric strength of the paper is very sensitive to the presence of moisture as is the oil. Therefore, it is important that the moisture content be known and its concentration controlled. An estimate of the moisture content of the paper is determined by measuring the moisture content of the oil.

Water migrates between the solid and liquid insulation in a transformer with changes in load and, therefore, temperature. Consequently, the concentration of water-in-oil alone expressed in parts per million does not provide sufficient information to obtain an adequate evaluation of the insulation system dryness. Relative saturation provides a better evaluation under a wide range of operating conditions and temperatures. Even using percent saturation to evaluate insulation system dryness has some inherent biases due to the fact that water never reaches equilibrium in the solid and liquid insulation. The further from equilibrium the system is when the sample is taken, the greater the bias. The bias may be either positive or negative and can be affected by short-term transients at solid/liquid surfaces or by longer-term transitions within the thicker insulation.

Further insight concerning the relative amounts of moisture in the oil and paper insulation may be gained from figures 10 and 11. After measuring the moisture content of the oil sample in the laboratory, the percent-

--`,,`,,,`-`-`,,`,,`,`,,`---

Copyright The Institute of Electrical and Electronics Engineers, Inc.
Provided by IHS under license with IEEE
No reproduction or networking permitted without license from IHS
Not for Resale

age saturation at any temperature may be determined from figure 9. It is important that the percentage saturation does not approach 30% at the lowest temperature that the transformer may be exposed to.

Once the moisture content of the oil is determined for a given temperature, the corresponding moisture content for the paper may be estimated from figure 11. Some general guidelines for interpreting data expressed in percent saturation of water in oil and in percent moisture by dry weight of paper are presented in tables 7and 8, respectively.

Table 7—Guidelines for interpretation of % saturation of water in oil

% Water saturation of oil	Condition
0–5	Dry insulation
6–20	Moderate to wet. Lower numbers indicate fairly dry to moderate levels of water in the insulation, whereas values towards the upper limit indicate moderately wet insulation.
21–30	Wet
>30	Extremely wet

Table 8—Guidelines for interpretation of % moisture by dry weight of paper

% Moisture by dry weight in paper	Condition
0–2	Dry paper
2–4	Wet paper
>4.5	Excessively wet paper

Copyright The Institute of Electrical and Electronics Engineers, Inc.
Provided by IHS under license with IEEE
No reproduction or networking permitted without license from IHS Not for Resale

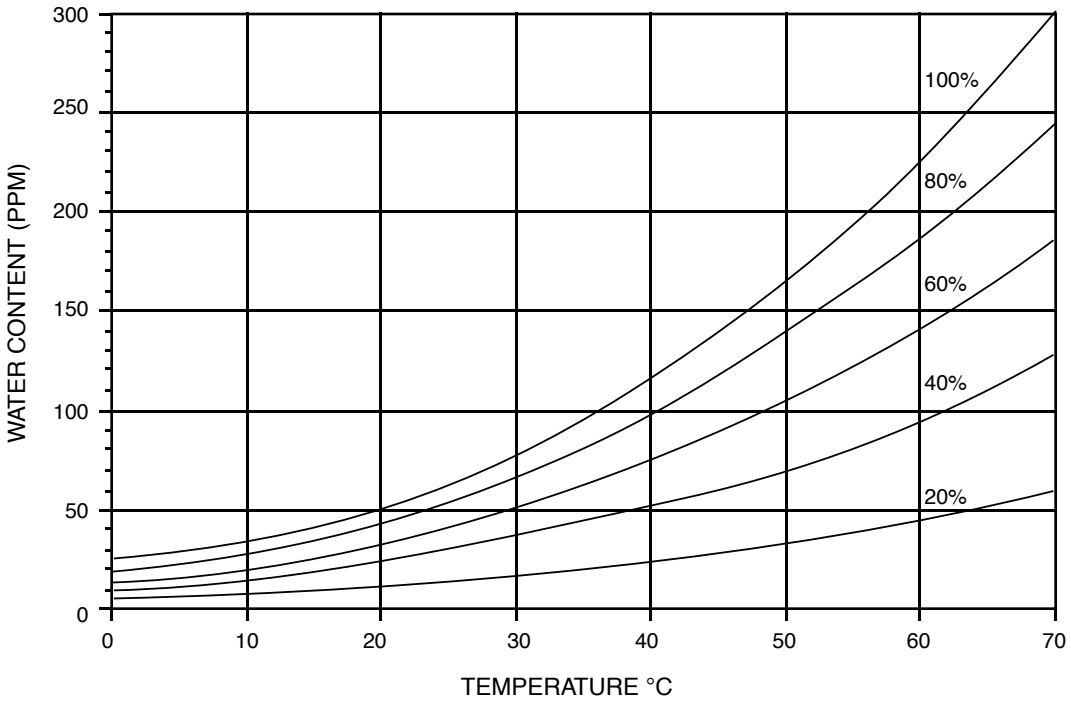

Figure 10—Moisture saturation curves for mineral oil

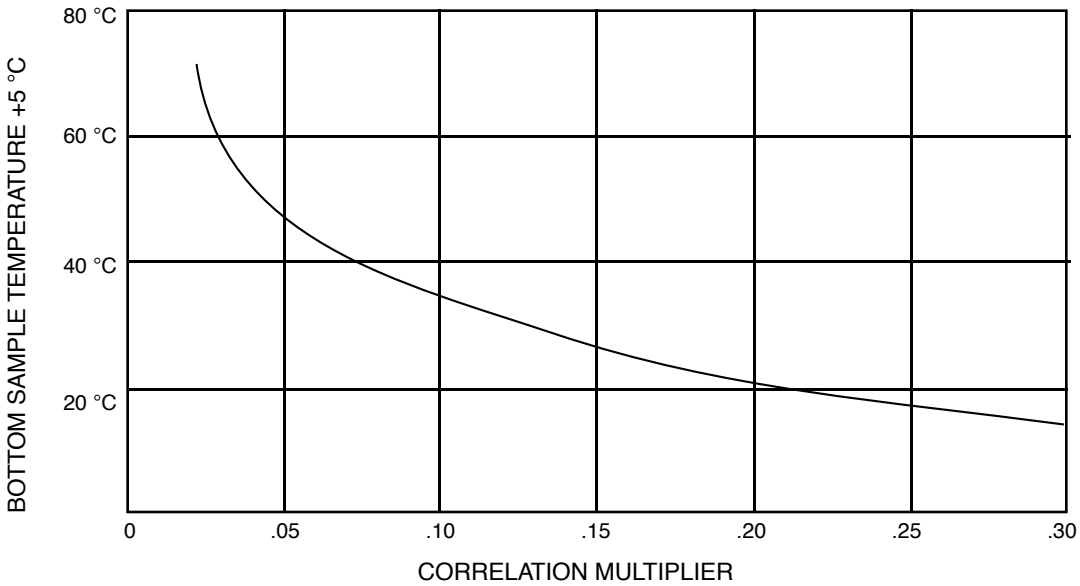

Correlation multiplier

To determine the % moisture by dry weight (% M/dw) of cellulosic insulation:
1) Determine PPM of H_2O.
2) Determine temperature of the bottom sample.
3) Add 5 °C to item 2.
4) Determine the correlation multiplier from graph using temperature from item 3.
5) Multiply PPM of H_2O by correlation multiplier to get % moisture by dry weight of cellulosic insulation

Redrawn with the permission of S.D. Meyers, Inc.

Figure 11—Percent moisture by dry weight of cellulosic insulation

--`,,```,,,,````-`-`,,`,,`,`,,`---

Copyright The Institute of Electrical and Electronics Engineers, Inc.
Provided by IHS under license with IEEE
No reproduction or networking permitted without license from IHS
Not for Resale

6.3.13 Specific gravity

This test determines the relative density of the transformer oil which is the ratio of the mass of a given volume of oil to the mass of an equal volume of water at the same temperature (15.6 °C).

The specific gravity of a mineral insulating oil influences the heat transfer rates and may be pertinent in determining suitability for use in specific applications. In cold climates ice may form in a de-energized unit so the maximum specific gravity of the dielectric oil should be at a value that will ensure that ice will not float in the unit. The oil's range should be from 0.84–0.91 (refer to ASTM D 3487-88). Water has a specific gravity of 1.0. Ice is typically 0.91. Thus in a water, oil, ice scenario both water and ice will be heavier than the oil.

This test can also be helpful in determining if the insulating fluid is oil, silicone, or askarel as the densities vary widely from fluid to fluid. ASTM D 1298-85 should be followed in the laboratory.

6.4 Tap changers

6.4.1 General

The two types of tap changers in a power transformer are tap changers for de-energized operation and LTCs. The construction of tap changers for de-energized operation is such that they shall only be operated with the transformer de-energized. Failure to do so will result in severe equipment damage, personal injury, and possible loss of life. They are normally located in the higher voltage winding of a power transformer. LTCs are designed to be operated while the transformer is energized. LTCs may be located in either the high-voltage winding or the low-voltage winding, depending on the requirements of the user, the cost effectiveness of the application, and tap changer availability.

6.4.2 General inspection procedures for LTCs

In the operating cycle of all LTCs, adjacent taps should be connected together at the point of transferring current from one tap to another. In an LTC, an impedance is introduced between these taps to control the circulating current at the point where the taps are connected together. In early designs, reactors were used as the transition impedances, while newer designs use resistors. In the load transfer operation, current is interrupted by a diverter switch. This switch may be an arcing-in-oil switch or a vacuum switch.

Equipment that is utilized as a current-interrupting device requires periodic inspection and maintenance. The frequency of inspections should be based on time in service, range of use, and number of operations. The inspection intervals described below are indicative of frequently used values. However, the actual intervals to be used are those specified by the manufacturer unless previous operational experience indicates that more frequent inspections are necessary. An initial inspection should be made on a tap changer at the end of the first year of operation. Subsequent inspections should be based on the results obtained from the initial inspection at the end of the first year of service. Regardless of the measured contact wear, the inspection interval should not exceed five years.

LTCs may be supplied in a separate compartment, which is welded or bolted to the transformer tank, or they may be located within the transformer tank. Generally, reactor transition tap changers, whether with arcing diverter switches or vacuum diverter switches, are built into a separate compartment. Resistor transition tap changers are sometimes located in a separate tank and sometimes within the main transformer tank. Those tap changers located within the transformer tank have two main components. The first is a separate cylindrical insulating tank that contains the diverter switches and transition resistors. This tank is sealed, so that the oil within it cannot mix with the main transformer oil. Directly under the sealed diverter switch tank will be the tap selector and changeover selector switch. Since no arcing occurs on these switches, they may be located in the main transformer oil. However, since they are located within the main transformer tank, inspection of these contacts cannot be made without removing the oil in the transformer tank. However, the diverter switches can be removed from this cylindrical tank for inspection without removing oil from the transformer tank.

Copyright The Institute of Electrical and Electronics Engineers, Inc.
Provided by IHS under license with IEEE
No reproduction or networking permitted without license from IHS Not for Resale

While still in service, a separate LTC compartment may be inspected with an infrared scanner (see annex C). Normally the temperature of the compartment may be a few degrees Celsius less than the main tank. Any temperature approaching or above that of the main tank indicates an internal problem. Prior to opening the LTC compartment, it should be inspected for external symptoms of potential problems. Such things as integrity of paint, weld leaks, oil seal integrity, pressure-relief device, and liquid level gauge are all items that should be inspected prior to entering the LTC.

Following de-energization, the separate LTC compartment should be drained of oil for internal inspection. Upon opening the LTC compartment, the door gasket should be inspected for signs of deterioration. The compartment floor should be inspected for debris that might indicate abnormal wear, and sliding surfaces should be inspected for signs of excessive wear.

6.4.3 Specific inspection procedures for LTCs

The following checkpoints should be addressed and the manufacturer's manual should be consulted for details to ensure the absence of problems and ensure proper operation in the future.

a) Inspection and maintenance of resistance-type and reactance-type load tap changing equipment (arcing type) mounted in a separate compartment

   1) Function of control switches
   2) LTC stopping on position
   3) Fastener tightness
   4) Signs of moisture such as rusting, oxidation, or free-standing water
   5) Mechanical clearances as specified by manufacturer's instruction booklet
   6) Operation and condition of tap selector, changeover selector, and arcing-transfer switches
   7) Drive mechanism operation
   8) Counter operation
   9) Position indicator operation and its coordination with mechanism and tap selector positions
   10) Limit switch operation
   11) Mechanical block integrity
   12) Proper operation of hand-crank and its interlock switch
   13) Physical condition of tap selector
   14) Freedom of movement of external shaft assembly
   15) Extent of arc erosion on stationary and movable arcing contacts
   16) Inspection of barrier board for tracking and cracking
   17) After filling with oil, a manual cranking throughout the entire range
   18) Oil dielectric breakdown voltage

   Finally, the tap selector compartment should be flushed with clean transformer oil. All carbonization that may have been deposited should be removed.

b) Inspection and maintenance of reactance-type load-tap changing equipment (vacuum type) mounted in a separate compartment

   The checklist for inspection and maintenance of resistance-type load tap changing equipment (arcing type) should be followed. In addition, the following should also be checked:

   1) Vacuum interrupter's wear (contact erosion) and presence of vacuum
   2) Vacuum monitoring system operation
   3) Coordination of vacuum bottles with selector mechanism

There should be only very minor amounts of carbon. The dielectric strength of the oil should be tested (see 6.3.4 for details) and it should be generally clear if the LTC has been operating properly. Refer to the manufacturer's instruction book for details on oil filling of the compartment. Most vacuum LTCs require oil filling under vacuum using degassed oil.

--`,,`,,,-`-`,,`,,`,`,,`---

Copyright The Institute of Electrical and Electronics Engineers, Inc.
Provided by IHS under license with IEEE
No reproduction or networking permitted without license from IHS
Not for Resale

6.4.4 Tap changers for de-energized operation—general inspection procedures

The tap changer for de-energized operation is normally located in the higher voltage winding of a power transformer. Its purpose is to adjust the turns ratio between the primary and secondary windings. Since this device is basically a switch, few tests are available with regard to its proper operation. Malfunction is generally indicated by the generation of excessive combustible gasses in the oil. These gasses would be indicative of hot metal-in-oil without cellulosic involvement.

De-energized tap changers are located within the transformer tank. Therefore, to inspect these devices, it is necessary to drain the oil to such a level that the tap changer is available for inspection.

Diagnostic checks normally involve verification of contact alignment, contact pressure, and visual inspection. Tests involving operation of the tap changer for de-energized operation shall be performed with the equipment de-energized. Failure to do so will result in violent equipment failure and may cause severe personal injury. The diagnostic checks are performed as follows:

a) *Alignment:* After operation, correct positioning should be verified by performing a turns ratio test. This check is to determine the proper alignment of the contacts of the tap changer for de-energized operation without entering the transformer tank. Improper alignment of the contacts may cause high contact temperature and ultimately result in failure of the power transformer. This is normally the first test to be performed on the tap changer.

   A transformer turns ratio tester is connected to the high voltage and low voltage windings of the phase to be tested. After nulling the meter, the tap changer operating handle is slowly moved in one direction until the null is lost. The position of the handle is marked on the face of the selector plate. The operating handle is then moved in the opposite direction until the null reappears and is subsequently lost again. This new position is also marked on the selector plate. The operating handle is then restored to the ON position. The final location of the handle should be halfway between the marks. Any significant deviation is indicative of misalignment and will require repairs before the transformer is re-energized. The above procedure should be repeated for all tap settings.

b) *Contact pressure:* Any of the techniques described in 6.1.1 may be used to measure the resistance. The measured resistance values should be corrected to factory values. Any substantial deviation (increase over factory values) could be indicative of improper contact pressure. In addition, if the transformer also has a LTC, the LTC switch should be in the NEUTRAL position in order to compare the measured resistance readings with factory values. In single-phase or wye-connected transformers, any phase which has a significantly higher resistance has a suspect contact. In a delta configuration, the single winding between the bushings where the significantly higher reading was obtained has a suspect contact. The other readings in the delta will be affected, but to a lesser degree. The measurements should be performed on each tap position of the tap changer for de-energized operation.

   If any of the resistance measurements are abnormal, the oil should be removed and the tap changer switch should be isolated. Resistance measurements should be repeated across the isolated switch in order to confirm the suspected defect before undertaking repair.

c) *Visual*: Failure of alignment and contact pressure tests to reveal a problem with a tap changer for de-energized operation will require the performance of a visual inspection. This test should be performed as a last resort since oil is removed from the transformer. Extraordinary efforts may be required to observe the tap changer if access is difficult. For example, a flexible fiber-optic viewing device may be required to view the tap changer. The tap changer should be examined for signs of burning or tracking. Any such damage should be corrected before restoration.

Copyright The Institute of Electrical and Electronics Engineers, Inc.
Provided by IHS under license with IEEE
No reproduction or networking permitted without license from IHS Not for Resale

6.4.5 Voltage regulators

A regulator is a device that will maintain a pre-selected voltage level on a regulated system regardless of load fluctuations within its rated capabilities. The main components in a step-voltage regulator are a tapped autotransformer, an under-load tap changer, and a control.

Maintenance checks are normally performed in two stages, while the equipment is energized and while the equipment is de-energized. The details of these checks are described below.

a) *Energized*. While still in service, the following checks may be made:

   1) The oil level which can be read from the oil level gauge on the side of the unit.
   2) The operation of the regulator's control system may be checked by using the manual mode of operation and running the regulator to a position outside the voltage bandwidth in the raise direction. The controls should then be switched to the AUTOMATIC setting. After the time delay programmed into the control expires, the regulator should return within bandwidth (which is normally the same as the starting position unless the incoming voltage is constantly varying). In order to check the lower direction, the above procedure should be repeated.
   3) The temperature of the regulator should be checked by means of the top oil thermometer and winding temperature indicator (if supplied) or by infrared scanning techniques (see annex C). A comparison can be made between identical units on different phases.
   4) If water leaks into the tank are suspected, the moisture content of the oil and its dielectric strength should be checked.

b) *De-energized*. After disconnecting from service, the following measurements should be made:

   1) Insulation resistance of winding
   2) Insulation power factor
   3) Winding ratio
   4) Winding resistance
   5) Dielectric breakdown strength of oil

A visual check of bushings for signs of cracks and/or oil leaks should also be performed. This is difficult when energized.

If the regulator has to be untanked following the above procedures, the items listed below should be checked.

— All connections should be examined for tightness.
— All contacts should be examined for wear following guidelines from the manufacturer's manual.
— The manufacturer's guidelines should be followed for the retanking procedure.

6.5 Core

6.5.1 General

Transformer core types are designated as core-form or shell-form. In a core-form transformer, the windings are wound on cylinders and placed around the core legs. In a shell-form transformer, the core is formed like a shell around the windings after the windings are set in the tank. In both types, the core is insulated from the tank and other grounded items. In addition, a single-point ground is installed to prevent a voltage rise from occurring on the core during operation. Should an inadvertent ground occur while the transformer is in service, a circulating current may be generated in the core. The magnitude of the circulating current will be inversely proportional to the resistance of its path. Severe damage may occur to the core if this condition is allowed to persist. The heat produced by this condition may generate large quantities of ethylene gas, and under severe conditions, quantities of acetylene. Under most extreme conditions, winding insulation can be destroyed, thus causing the transformer to fail. To ensure proper operation of the core system, a check should first be made to determine if an inadvertent core ground exists. In the absence of an inadvertent core ground, the core insulation resistance should be measured to determine its adequacy.

Copyright The Institute of Electrical and Electronics Engineers, Inc.
Provided by IHS under license with IEEE
No reproduction or networking permitted without license from IHS
Not for Resale

6.5.2 Core insulation resistance and inadvertent ground tests

The resistance of the core's insulation system should be measured at regular intervals. Trends are important to indicate the rate of deterioration of a core's insulation system. This test should be performed prior to a unit being placed in service or following modifications to the transformer that could affect the integrity of its core insulation. This test may also be performed at other times, usually during a major inspection.

In addition to measuring the core insulation-to-ground resistance, the technique may also be used to detect the presence of inadvertent grounds.The only way to be sure that an inadvertent core ground exists is to remove the equipment from service and perform a resistance-to-ground test on the core itself. This test can be successfully performed only after the core grounding strap is disconnected from ground. On shell-form equipment, the ground strap is generally not easily accessible. In this case, the manufacturer or a qualified consultant should be contacted. Many devices have more than one core or have the core divided into separate units. All cores and/or units may be tested together, but if an inadvertent core ground is indicated, their straps should be separated for independent testing.

This test should be performed prior to a unit being placed in service or following modifications to the transformer that could affect the integrity of its core insulation. At other times, this test should be performed when indicated by gas chromatography or during a major inspection.

Test procedure: For insulation resistance and inadvertent ground tests the voltage should not exceed 1000 V. The following sequence should be performed:

a) The core grounding strap should be located. On modern core-form transformers, the core ground connection may be brought through the cover by means of a small bushing. Thus the transformer need not be opened.

b) The strap should be disconnected from where it is bolted to the frame, tank, etc.

   Precautions: Care should be taken to secure all hardware as the strap is disconnected. Sometimes the fastener is not captive. The dropping of a lockwasher or nut down into the windings may lead to failure of the transformer. Care should be taken to secure all hand tools and hardware.

c) A test should be made between the strap and its grounding point to determine if an inadvertent ground exists. This is usually performed by utilizing a dc high-resistance meter. Readings <10 MΩ should be read on a lower scale for accuracy.

d) The temperature of the core should be estimated to give a corrected reading.

Interpretation: See table 9.

Table 9—Typical insulation resistance ranges for various conditions of core insulation

Type of equipment	Core insulation resistance	Condition of insulation
New	>1000 MΩ	
Service-aged	>100 MΩ	Normal
	10–100 MΩ	Indicative of insulation deterioration
	<10 MΩ	Sufficient to cause the generation of destructive circulating currents and need to be investigated

Copyright The Institute of Electrical and Electronics Engineers, Inc.
Provided by IHS under license with IEEE
No reproduction or networking permitted without license from IHS Not for Resale

6.5.3 Location of an inadvertent core ground

If an inadvertent core ground exists, decisions on whether detection or location and repairs are to be performed in the field depend on the circumstances involved. Visual inspections may typically reveal the source of the inadvertent core ground if that inadvertent ground is along the top core yoke of a core-form transformer. Otherwise, locating it and determining a remedy can be quite difficult. The severity of the problem, importance of the equipment, its size, type of construction, and other factors should be considered. On shell-form equipment the ground strap is generally not easily accessible. In this case, the manufacturer or a qualified consultant should be contacted for assistance.

The following procedure should be followed to locate inadvertent core grounds:

a) The core grounding strap should be located.

b) The strap should be disconnected from where it is bolted to the frame, tank, etc.

   Precautions: Care should be taken to secure all hardware as the strap is disconnected as failure to do so may result in failure of the transformer.

c) A 12 V battery or equivalent isolated dc source should be connected across the core from side to side. This connection should cause the battery's voltage to bridge all of the core's laminations.

d) The negative lead of a dc voltmeter should be connected to a convenient point of ground inside the tank.

e) Contact should be made with the positive lead of the voltmeter to the core's lamination, starting at one side of the core. A voltage should be observed. If not, the contact should be moved to the other side of the core. The contact should be moved gradually across the core, moving at right angles to the core's laminations, until the voltmeter reads zero.

Interpretation: The lamination plane at the zero point is the location of the inadvertent core ground. A visual examination of this plane may reveal the source of the inadvertent ground and its remedy may be self-evident. If not, the core ground strap can be moved to this plane. Relocation of the strap will not eliminate the inadvertent core ground, but will reduce the core circulating current to an insignificant level.

Alternatively, if the core is grounded externally to the tank, the circulating current may be reduced by connecting a resistor between the ground connection and the tank. The resistor will limit circulating currents to a safe level. This provides an opportunity for in-service monitoring by measuring the voltage across the resistor. This technique should only be used after consultation with the manufacturer.

6.6 Tanks and associated devices

6.6.1 General

Almost all electrical equipment is contained in some type of tank. This tank provides mechanical protection for the equipment and also acts as a reservoir for the insulating liquid surrounding the equipment. Attached to the tank are a number of bushings, fittings, and associated devices. The types and number of these devices attached to the tank vary with the size, voltage class, and use of the equipment. Generally a device provides one of three or more functions. The most common of these are

a) Visual indication of a condition or state
b) An alarm indication of some abnormality
c) A benefit to the electrical performance of the equipment

Copyright The Institute of Electrical and Electronics Engineers, Inc.
Provided by IHS under license with IEEE
No reproduction or networking permitted without license from IHS
Not for Resale

6.6.2 Conservators

Conservators are vessels normally located at an elevation higher than the cover of the tank. They can, however, be located on a structure immediately adjacent to the tank. The bottom of the conservator is elevated above the top of the tank and is connected to the tank by piping. This positioning allows the oil in the tank to always remain at a positive pressure with respect to the atmosphere, thus preventing the possibility of tank moisture inception. There is usually a valve on the pipe and an oil level indicator on the side of the vessel. The purpose of a conservator is to act as a reservoir for the tank's oil as the equipment's operating temperature rises. It functionally acts as an expansion vessel for the tank's oil.

There are basically three types of conservator systems. The "free-breathing" system is the older of these types. The oil level rises and falls with the temperature of the equipment, and the oil is constantly exposed to the atmosphere. Some free-breathing conservators may employ dehydrating breathers of either the desiccant or refrigerant type. Both of the other two types of conservators prevent the oil from coming in contact with the atmosphere. The newer type uses an air-cell (sometimes referred to as a "bladder"), which is a large balloon-like envelope located inside the conservator. As the oil level in the conservator rises and falls, air is expelled or drawn into the air-cell. The older type has a diaphragm attached to the inside of the conservator vessel wall that rises with the expansion of the equipment's oil.

Checks should be carried out according to the procedure described below:

Procedure: The oil level indicated on the liquid level gauge on the side of the conservator vessel should be recorded. This reading should be made with respect to the 25 °C mark on the gauge. The top oil temperature of the equipment should then be recorded. The top oil temperature reading should be used to correct the oil level gauge reading. The resulting corrected level should be in the normal (25 °C) range.

Interpretation: If the corrected level is normal, no additional action should be required. If the corrected level is substantially above or below the normal level, the measurements and calculations should be rechecked. If the results are the same, it may be necessary to add or remove, as the case may be, some of the equipment's oil. The user should refer to the manufacturer's recommendations. In addition, the cause of any incorrect level should be determined and corrective steps should be taken prior to taking any other action. Generally the corrected level should remain fairly constant unless there is an oil leak, etc.

Precautions: Oil sampling for diagnostic testing is typically performed on an energized transformer. Otherwise, oil should never be added or removed from an energized transformer, except in the most extreme circumstances, and then only with great knowledge and care.

6.6.3 Cooling system

Large power transformers are fitted with some type of cooling system. Cooling systems generally consist of combinations of radiators, pumps, and fans.

6.6.3.1 Cooling fan controls

Cooling fan controls are designed to operate both manually and automatically. The automatic function is generally related to load or energization (or both). If the transformer is single rated, the cooling equipment should operate when the transformer is energized, since this type of transformer has no self-cooled rating and will otherwise severely overheat. Triple-rated transformers have a self-cooled rating, as well as two other stages of cooling. These stages of cooling can be initiated by either oil temperature controlled switches or a device that is sensitive to the transformer loading such as a winding temperature indicator, which has become the preferred method.

Checks should be carried out according to the procedure described below.

--`,,`,,,-`-`,,`,,`,`,,`---

Copyright The Institute of Electrical and Electronics Engineers, Inc.
Provided by IHS under license with IEEE
No reproduction or networking permitted without license from IHS Not for Resale

Procedure: The type of cooling control system installed on the transformer should be determined in order to ascertain what inspections or tests are required. Running of high speed pumps by manual control in some cooling systems, may, under certain conditions, result in static electrification failure of a power transformer. The manufacturer's up-to-date recommendations should be referred to.

Manual control: This should be turned on for a brief period to ensure that each stage has sufficient voltage to operate. Fan operation should be observed. Oil pumps should be checked by observing their flow gauges. The manufacturer's recommendations should be referred to.

Temperature control: The temperature bulb should be removed from its well on the side of the transformer. The master control should be set to the AUTOMATIC position. Using a temperature controlled calibration instrument, the temperature of the bulb should be slowly raised and observed for proper calibration (operation).

Load control: The secondary current of the controlling current transformer (CT) should be checked to ensure that it is operating properly. After shorting out the secondary of the CT (if transformer is energized) the secondary lead should be removed from the control circuit. Current should then be injected into the control circuit and the level of this current varied in order to observe proper operation.

Interpretation: Any improper operation should be corrected to ensure satisfactory performance of the transformer.

CAUTION

Extreme caution should be observed when performing operations or with the secondary of an energized CT. If the secondary of the CT becomes open circuited (no burden) while the CT is energized, catastrophic results can occur without warning.

6.6.3.2 Rotation of cooling fans

Cooling fans are designed to move air at ambient temperature across the radiator or cooler and provide heat transfer from the equipment's insulating liquid to the surrounding atmosphere.

The rotation of the fan blades should be observed to ensure that the air flow is in the proper direction for the type of device involved. Observation may be facilitated if it is performed at a lower-than-normal speed, either during start-up or immediately after switching off.

Interpretation: Corrections to rotation should be made as indicated by inspection.

CAUTION

When examining fans, care should be taken not to come into contact with the blades while they are rotating

6.6.3.3 Visual inspection of cooling fans

Cooling fans are designed to enhance the transfer of heat generated by electrical equipment to the atmosphere. Assuming that the fans are properly dimensioned with respect to the design of the cooling system, it is only important to ensure that they are operating at their design speed, that airways are not blocked, and that guards and blades are not damaged.

Copyright The Institute of Electrical and Electronics Engineers, Inc.
Provided by IHS under license with IEEE
No reproduction or networking permitted without license from IHS
Not for Resale

At least two fans should be observed while they are running. Any fan that is running at less than its design speed will be obvious to the naked eye. For more precise measurements, a tachometer or other type of timing device may be used, but this is rarely necessary. Visual inspection should be made for any trash or debris that could reduce the air flow onto the heat exchanger surface. The fan guard and blade should be examined for signs of distortion or other damage.

Interpretation: Improper air flow can reduce cooling system efficiency, cause overheating, and result in damage to electrical equipment. All fans that are not running at design speed should be replaced. After stopping fans, any obstructions to air flow should be removed and any damaged fan guards or blades should be replaced or repaired.

CAUTION

When examining fans, care should be taken not to come into contact with the blades while they are rotating

6.6.4 Cooling system heat exchangers

There are basically three types of heat exchangers used to dissipate heat generated by power transformers.

a) *Water cooler:* This heat exchanger consists of a set of tubes installed inside the equipment's tank and immersed in the insulating liquid of the equipment. Fresh water is pumped through these tubes to carry off excess heat from the insulating liquid.

b) *Oil-water cooler:* This heat exchanger is a type of cooler found on older style equipment at generating plants.

c) *Forced-air, forced-oil cooler:* This heat exchanger is found primarily at generating plants and on large EHV transformers. It is characterized by small, usually vertical tubes wrapped with thin fins. The tubes are encased in a shell that is open on one side and has a fan shroud on the other side. Due to the closeness of the fins, this type of device is very efficient, but is also susceptible to clogging by debris. Reduced air flow has a dramatic effect on the device's efficiency.

All other transformers are equipped with radiators. This type of cooling is characterized by long, broad, flat, hollow tubes mounted between two large pipes called headers. The insulating oil flows into the upper header, is cooled, and flows naturally back through the lower header into the equipment's tank.

The type of cooling device the equipment is fitted with should be identified and the appropriate instructions below should be followed.

Water coolers: Water flow rate should be observed to ensure that this type of cooler is operating at its maximum efficiency. Inadequate water flow or higher water temperatures will reduce the efficiencies of this type of system. Oil samples should be taken from the equipment's tank quite often (weekly) with this type of cooler to determine if they are leaking water into the equipment's tank.

Interpretation: The pressure regulator or water pump output (or both) should be adjusted to ensure proper water flow. Any amount of visible water found in the oil sample calls for immediate removal of the equipment from service until the water leak has been repaired and the spilled water removed from the equipment's tank.

Air coolers: Visual observation should be made through the cooler from one side to the other. It may be necessary to hold a strong light source on the opposite side to allow for inspection of trapped debris. The surfaces of the cooler fins should be examined for signs of contamination. On coolers where the fan action pulls air through the cooler, a single sheet of typing paper (standard weight) should be placed on the air inlet

Copyright The Institute of Electrical and Electronics Engineers, Inc.
Provided by IHS under license with IEEE
No reproduction or networking permitted without license from IHS Not for Resale

side. The paper should be held in place by the force of the air flow. For more precise measurements, an anemometer may be used to measure air flow at several points on the cooler for comparison with a serviceable cooler of the same specifications and size.

Radiators: Air flow is generally not a problem due to the relatively wide spacing between the tubes.

Interpretation: Care should be taken to remove any debris that becomes lodged between the fins or tubes of air coolers or radiators. In addition, any contamination build-up should be removed from the fins or tubes, when practical, to prevent a reduction in the device's efficiency.

CAUTION

When working around fans, care should be taken not to come into contact with the blades while they are rotating

6.6.5 Cooling system pumps

Large power equipment is commonly equipped with liquid pumps to increase the cooling system's efficiency. These pumps consist of three-phase or single-phase motors, usually rated in the 230–480 V range. Motor size and pump capacity vary. Most pumps are equipped with sleeve-type thrust bearings as opposed to ball or roller bearings. The power equipment's insulating fluid flows through the motor's winding and carries off heat generated by the losses of the motor.

6.6.5.1 Bearings of cooling pumps

Bearing wear is a cause of pump failure. For the most part, the only method of determining if excessive bearing wear exists is by removal of the pump for a visual inspection. Abnormal vibration or noise when the pump is running may indicate a need for further investigation, but is far from conclusive. State-of-the-art fiber optic wear indicators have been installed on some newer cooling pumps and eliminate the need for pump removal to determine if wear is excessive.

After removing the pump from the system, the end play of the shaft should be measured. The impeller and impeller housing should be examined for any wear.

Interpretation: The manufacturer's guide should be consulted to determine if excessive bearing wear exists as indicated by amount of shaft end-play observed. Any indication of wear on the impeller and impeller housing is indicative of excessive thrust bearing wear.

Precautions: Removal of a cooling pump requires a very precise knowledge of the arrangement of the cooling system. Equipment and cooling pump shall be de-energized. The cooling system surrounding pump shall be effectively isolated from the remainder of the equipment's cooling system. Isolating valves should be closed and the system should be drained before the pump is removed. It is recommended that blanking plates be installed after the pump is removed. Pumps should never be run without complete immersion in insulating liquid.

6.6.5.2 Electrical problems of cooling pumps

Due to the integral relationship between a cooling pump and the power equipment's insulating liquid, electrical problems in the pump motor can give false indications of the power equipment's condition when utilizing gas chromatography. Partially-shorted motor windings and other electrical problems with the pump motor will cause the generation of combustible gasses in the equipment's insulating liquid since it should flow directly through the pump motor during normal operation.

Copyright The Institute of Electrical and Electronics Engineers, Inc.
Provided by IHS under license with IEEE
No reproduction or networking permitted without license from IHS
Not for Resale

Routinely, or after detecting abnormal levels of combustible gas in the power equipment's insulating liquid, the current flowing to each electrical terminal of each pump should be accurately measured while the pump is operating.

Interpretation: Any significant imbalance of current between terminals >15–20% is indicative of a problem with the pump motor. Differences between current ranges for like pumps on the same piece of electrical equipment should be compared. Any significant difference may be indicative of a restriction in the area of the cooling system where the pump with the higher current drain is located or a problem within the pump itself.

6.6.5.3 Rotation of cooling pumps

Cooling pumps are, for the most part, centrifugal type pumps and, as such, will pump some liquid regardless of their direction of rotation.

The pumps should be manually turned on and off and the action of each pump's flow gauge should be observed while the pump is coming on. The oil flow should have ceased or be at a bare minimum before energizing the circuit.

Interpretation: Pumps that have their direction of rotation reversed build up flow at a visibly slower rate than normally operating pumps. If the movement of the flow gauge flag is sluggish where three-phase motors are used, there is an indication of reverse rotation. Reverse any two electrical leads supplying the suspect pump and re-energize. The movement of the flow gauge flag should now be much more prompt.

6.6.6 Fault gas detector relay—operation

In general, only conservator-equipped power transformers are equipped with fault gas detector relays. The gas detector relay detects the presence of free gas liberated from the oil, indicating a level of gas generation beyond the dissolved gas saturation limits of the oil. Air leaking into the transformer, usually during extremely cold ambients, occasionally can also register on the gas detector relay.

The accumulated gas should be analyzed per the manufacturer's instructions whenever the gauge indicates any value above zero. Dissolved gas-in-oil analysis would also be appropriate at this time.

Some devices in use on transformers also perform some limited on-line, dissolved gas-in-oil analysis. The purpose of these devices is to alert the user when gas generation rates exceed pre-determined limits. When this alert is received, more detailed laboratory gas-in-oil analysis can be performed.

6.6.7 Fault pressure relay

There are two types of sudden pressure relays. The most common type is mounted under the oil. The other type is mounted in the gas space. Internal arcing in liquid-filled electrical power equipment generates excessive gas pressure that can severely damage equipment and present extreme hazards to personnel. The sudden pressure relay is intended to minimize the extent of damage by quickly activating protection systems.

The manufacturer's recommendations should be referred to for adjustment, repair, or replacement of improperly operating devices.

6.6.8 Flow gauge operation

All power equipment cooling pumps should be equipped with a cooling pump flow gauge. This device is used to determine whether there is oil flowing through the pump. It is not indicative of the velocity of the oil or the condition of the pump.

Copyright The Institute of Electrical and Electronics Engineers, Inc.
Provided by IHS under license with IEEE
No reproduction or networking permitted without license from IHS Not for Resale

After making sure that oil cooling pumps are on, flow gauge should be observed for indication of flow. The pump should then be turned off momentarily to check that the gauge position changes to the OFF (no flow) position.

Interpretation: If the pump is on and no flow is indicated, the sending unit may be defective. If the pump is turned off and the flow gauge continues to indicate flow, the gauge is probably stuck in the flow position and the sending unit or entire gauge may need to be replaced. It is normal for the gauge to continue to indicate flow for a brief period before indicating off (no flow), following the turning off of a pump. This is due to conservation of momentum with respect to the oil.

Precautions: Lack of flow from oil cooling pumps during operation may be indicative of imminent failure. Necessary corrective action should be taken immediately.

6.6.9 Visual inspection of liquid level gauges

Knowledge of the oil level in a transformer tank is of paramount importance. Most tanks are equipped with a liquid level gauge normalized for 25 °C operation. As the temperature of the liquid changes, the level will rise or fall correspondingly. The equipment's nameplate may state the increment of increase or decrease in liquid level for each ten degree variation in liquid temperature. This specification may also reference the distance from the tank cover to the liquid at a specific reference temperature (usually 25 °C). The common gauge is a float type with a round face and is generally equipped with one or two alarm contacts. One contact will indicate low liquid level, while the second, if supplied, will indicate high liquid level. The face is usually marked at the 25 °C (or Normal) point, High, and Low. The last two indications are relative and have no specific relationship to any real value.

The indication of the needle on the face of the liquid level gauge should be observed. This reading should be reasonably normalized with respect to the top oil temperature reading.

Calibration of this gauge should never be required. If the gauge is out of calibration, replacement is recommended.

Precautions: It is important to maintain proper oil level throughout the entire temperature operating range of the equipment. Failure to do so may result in loss of cooling and, in severe cases, damage to equipment.

6.6.10 Visual calibration of pressure gauges

The internal pressure of a power equipment tank is a function of liquid temperature and gas generation. This pressure is measured by a pressure gauge that should be calibrated periodically per appropriate standards.

On an LTC compartment or regulator there should be a small positive pressure, relative to that in the power transformer tank. If the LTC is of the vacuum-bottle type, there should never be any pressure buildup. In an LTC with a sealed compartment, pressure will build up with every tap change operation. These compartments are supplied with a pressure relief valve that opens at about 3 psi and re-seals at about 1 psi. This prevents any ingress of moisture into the tap changer compartment.

Precautions: High pressure can be indicative of extremely serious operating conditions and should be investigated immediately.

6.6.11 Temperature gauges

Oil temperature and hot spot temperature gauges are important for proper operation of the transformer. These gauges not only indicate temperature but also operate the fans and coolers by means of microswitches that can be adjusted for various temperature settings. These gauges should be calibrated on a regular basis on site with portable devices or in the laboratory.

Copyright The Institute of Electrical and Electronics Engineers, Inc.
Provided by IHS under license with IEEE
No reproduction or networking permitted without license from IHS
Not for Resale

a) *Calibration of top oil temperature gauge:* The gauge should be removed from the transformer and the sensing bulb should be placed in a controlled hot oil bath. Calibration should be checked at several points on the gauge.

b) *Calibration of winding hot spot temperature gauge:* Based on measured temperature rises, or data from tests of a thermally duplicate transformer, bias current to the heating coil of the winding temperature indicator is factory adjusted to simulate the same gradient in degrees Celsius over top oil rise as will be experienced by the hottest spot in the transformer windings.

Current in the heater circuit is adjusted by the transformer manufacturer; the magnitude of this current should be known to allow calibration of the unit to be verified. The calibration curve of the heater current vs. hottest spot gradient is available from the transformer manufacturer.

Copyright The Institute of Electrical and Electronics Engineers, Inc.
Provided by IHS under license with IEEE
No reproduction or networking permitted without license from IHS Not for Resale

Annex A

(informative)

Power factor measurements

A.1 General

Most modern dielectric-loss test sets are equipped with a selectable test configuration that simplifies the testing of complex insulating systems. The selections available include ungrounded specimen test (UST), grounded specimen test (GST), and grounded specimen test with guard. These configurations allow each section of complex insulating systems to be tested separately.

It is important for individual sections of insulation to be tested separately if possible, to prevent large sections from concealing the deterioration in small sections.

A.2 Ungrounded specimen test (UST)

The UST configuration is used for measurements between two terminals of a test specimen that are not grounded, or that can be removed from ground. In the UST configuration, current flowing in the insulation between the voltage lead and the measuring lead of the instrument is measured and current flowing to ground is not measured. This configuration is illustrated in figure A.1 a).

A.3 Grounded specimen test (GST)

The GST configuration permits testing from an ungrounded terminal to a grounded terminal(s). In the GST, all current flowing to ground is measured by the test set. This configuration is illustrated in figure A.1 b).

A.4 Grounded specimen test with guard

The GST-guard configuration allows unwanted currents to bypass the measuring circuit, and enables smaller sections of insulation to be tested individually. Only the ground currents are measured using a GST-guard configuration. Current flowing to terminals with the guard connection are not measured. This configuration is illustrated in figure A.1 c).

A.5 Simple and complex insulating systems

A.5.1 Simple system

A simple insulation system consists of two terminals separated by insulation, and is represented as a single capacitor. An example of a simple system is an apparatus bushing with its center conductor and mounting flange as the two electrodes.

A.5.2 Complex system

A complex insulating system consists of three or more terminals insulated from each other. A three-terminal system can be represented by a network of three capacitors, and a four-terminal system by six capacitors (see figure A.2). Two-winding transformers and high-voltage circuit breakers are complex systems.

Copyright The Institute of Electrical and Electronics Engineers, Inc.
Provided by IHS under license with IEEE
No reproduction or networking permitted without license from IHS
Not for Resale

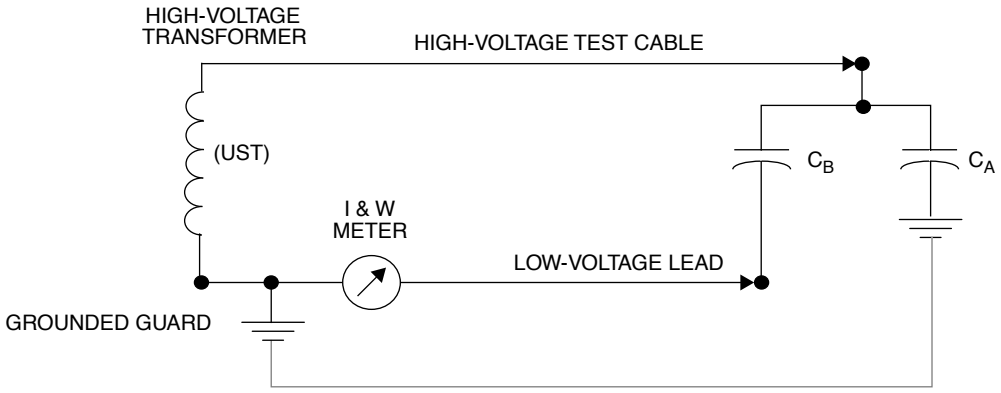

a) Low-voltage switch in UST—
Measure C_B only (ungrounded-specimen test mode UST)

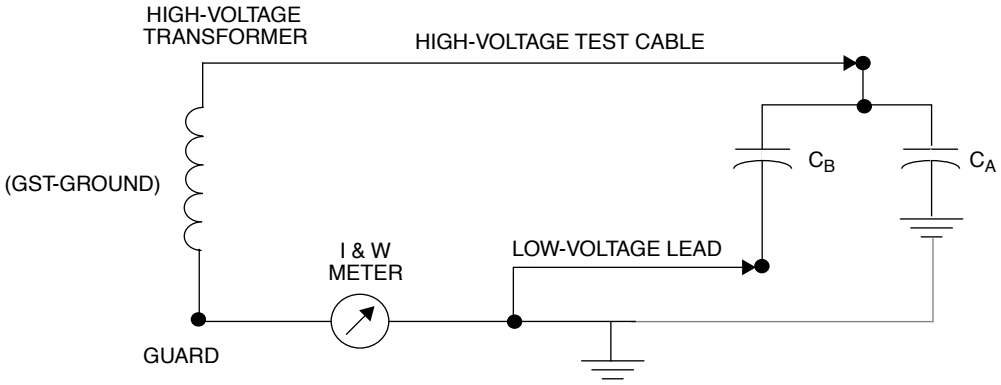

b) Low-voltage switch in ground—
Measure C_A and C_B (grounded-specimen test mode GST)

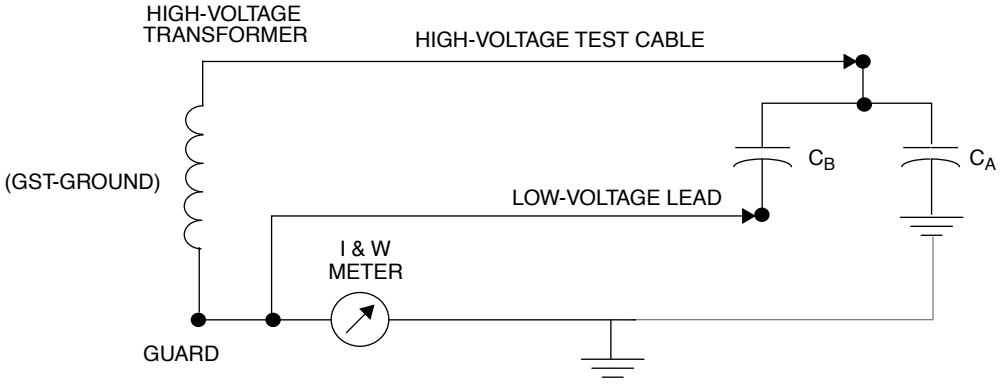

c) Low-voltage switch in guard—
Measure C_A only (grounded-specimen test mode GST)

Figure A.1—Measuring circuit configurations for power factor measurements

--`,,`,,,-`-`,,`,,`,`,,`---
Copyright The Institute of Electrical and Electronics Engineers, Inc.
Provided by IHS under license with IEEE
No reproduction or networking permitted without license from IHS
Not for Resale

TWO WINDING TRANSFORMER

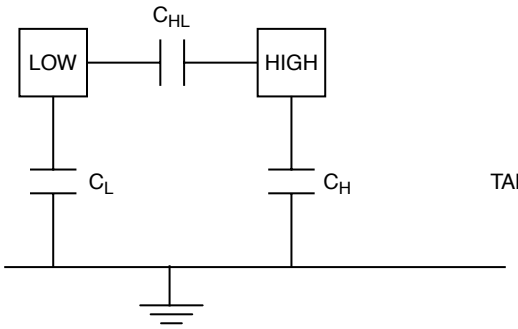

Test Mode	Energize	Ground	Guard	UST	Measure
GST	High	—	Low	—	C_H
GST	Low	—	High	—	C_L
		Alternative Test for C_{HL}			
UST	High	—	—	Low	C_{HL}
UST	Low	—	—	High	C_{HL}

THREE WINDING TRANSFORMER

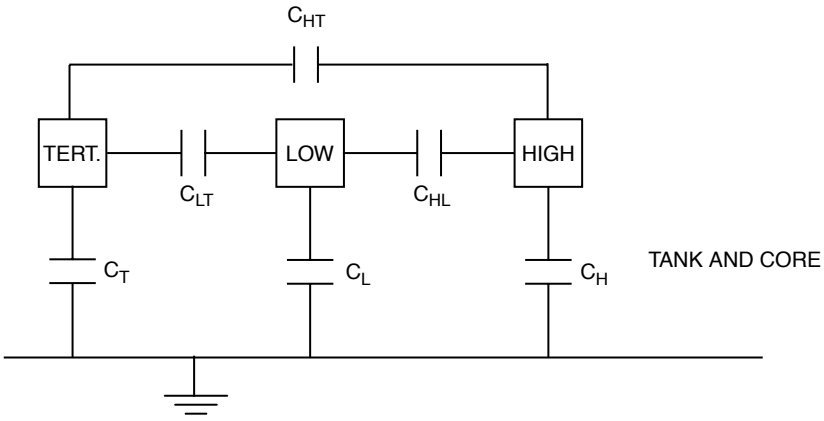

Test Mode	Energize	Ground	Guard	UST	Measure
GST	High	—	Low, Tert.	—	C_H
GST	Low	—	Tert., High	—	C_L
GST	Tert.	—	High, Low	—	C_T
		Supplementary Test for Interwinding Insulations			
UST	High	Tert.	—	Low	C_{HL}
UST	Low	High	—	Tert.	C_{LT}
UST	Tert.	Low	—	High	C_{HT}

Figure A.2—Test connections for direct measurement of individual component

Copyright The Institute of Electrical and Electronics Engineers, Inc.
Provided by IHS under license with IEEE
No reproduction or networking permitted without license from IHS
Not for Resale

Annex B

(informative)

Bushings[6]

Bushings may be classified generally by design as follows:

a) Condenser type
   1) Oil-impregnated paper insulation, with interspersed conducting (condenser) layers or oil-impregnated paper insulation, continuously wound with interleaved lined paper layers
   2) Resin-bonded paper insulation, with interspersed conducting (condenser layers)

b) Noncondenser type
   1) Solid core or alternate layers of solid and liquid insulation
   2) Solid mass of homogeneous insulating material (e.g., solid porcelain)
   3) Gas filled

For outdoor bushings, the primary insulation is contained in a weatherproof housing, usually porcelain. The space between the primary insulation and the weathershed is generally filled with an insulating oil or compound (also, plastic and foam). Some of the solid homogenous types may use oil to fill the space between the conductor and the inner wall of the weathershed. Bushings may also use gas such as SF_6 as an insulating medium between the center conductor and outer weathershed.

Bushings may be further classified generally as being equipped or not equipped with a potential tap or power-factor test tap or electrode.

Note—Potential taps are sometimes also referred to as “capacitance” or “voltage” taps.)

The bushing, without a potential tap or power-factor tap, is a two-terminal device that is generally tested overall (center conductor to flange) by the GST method. If the bushing is installed in an apparatus, such as a circuit breaker, the overall GST measurement will include all connected and energized insulating components between the conductor and ground.

A condenser bushing is essentially a series of concentric capacitors between the center conductor and the ground sleeve or mounting flange. A conducting layer near the ground sleeve may be tapped and brought out to a tap terminal to provide a three-terminal specimen. The tapped bushing is essentially a voltage divider and, in higher voltage designs, the tap potential may be utilized to supply a bushing potential device for relay and other purposes. In this design the potential tap also acts as a low-voltage power-factor test terminal for the main bushing insulation, C_1. Refer to figure B.1.

Modern bushings rated above 69 kV are usually equipped with potential taps. (In some rare instances 69 kV bushings were equipped with potential taps.) Bushings rated 69 kV and below may be equipped with power-factor taps. In the power-factor tap design, the ground layer of the bushing core is tapped and terminated in a miniature bushing on the main bushing mounting flange. The tap is connected to the grounded mounting flange by a screw cap on the miniature bushing housing. With the grounding cap removed, the tap terminal is available as a low-voltage terminal for a UST measurement on the main bushing insulation, C_1, conductor to tapped layer.

[6]© Doble Engineering Company. All rights reserved. Printed by permission of Doble Engineering Company.

Copyright The Institute of Electrical and Electronics Engineers, Inc.
Provided by IHS under license with IEEE
No reproduction or networking permitted without license from IHS Not for Resale

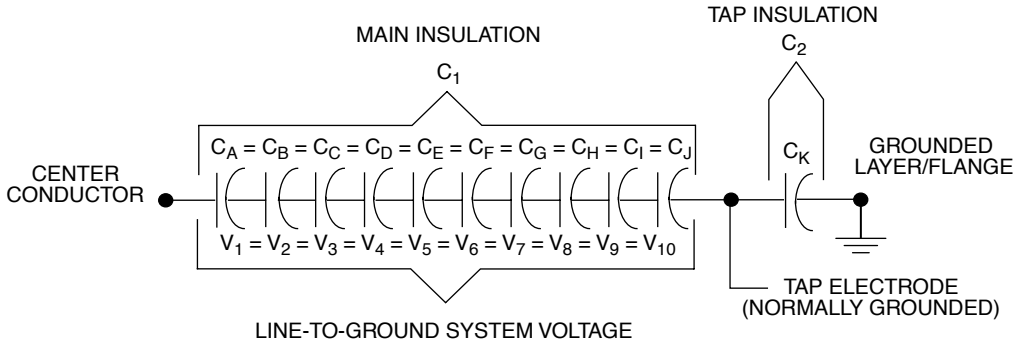

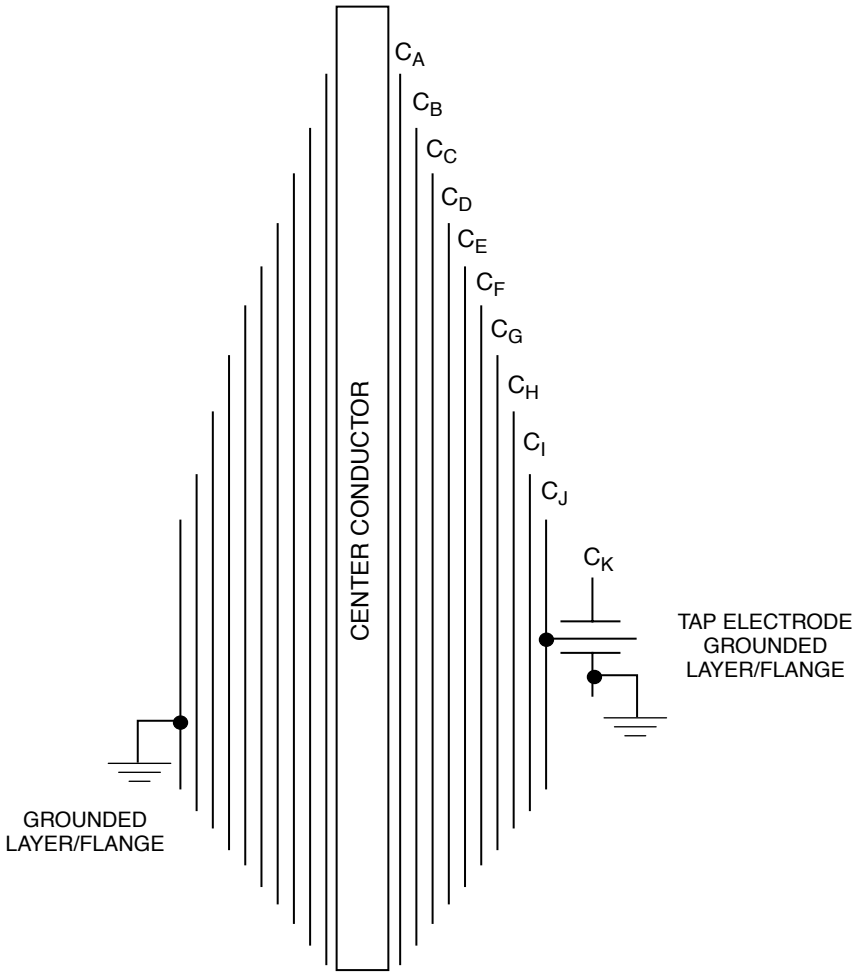

NOTES
1—Equal capacitances, C_A through C_J, produce equal distribution of voltage from the energized center conductor to the grounded condenser layer and flange.
2—The tap electrode is normally grounded in service except for certain designs and bushings used with potential device.
3—For bushings with potential taps, the C_2 capacitance is much greater than C_1. For bushings with power-factor tap, C_1 and C_2 capacitances may be same order of magnitude.

Figure B.1—Typical condenser bushing design

Copyright The Institute of Electrical and Electronics Engineers, Inc.
Provided by IHS under license with IEEE
No reproduction or networking permitted without license from IHS
Not for Resale

Annex C

(informative)

Infrared temperature measurements

C.1 General

Infrared (IR) temperature measurement systems can provide an effective noncontact means for detecting the localized temperature anomalies associated with power apparatus. The use of IR emissions to measure object temperatures is based upon the fact that IR emissions increase with temperature in a predictable way. Therefore, IR detectors "see" heat in the IR spectrum in the way that light can be seen in the visible spectrum. The systems offered by manufacturers include spot radiometers, line scanners, pyroelectric vidicon tube imagers, solid-state detector imagers, and radiometers. These systems are available with different levels of sophistication in controls and data presentation.

C.2 IR temperature measurement

IR temperature measurement instruments allow the user to detect the thermal anomalies associated with many faults in power apparatus. Thermal variations in power apparatus result from increased electrical resistance due to component failure, fatigue, and mechanical misalignment. The emission of IR energy from an object increases as a function of the object temperature. The IR instruments collect the energy emitted by the object of interest and present to the user a qualitative and/or quantitative representation of the object temperature. This annex is intended to highlight some of the parameters that must be understood when performing an IR measurement as part of a maintenance program.

Every object radiates energy. The amount of radiated energy is a function of the object temperature and the emissivity of the surface. The emissivity is a parameter that specifies how well the surface emits radiation. The value varies from 1.0–0.0, where 1.0 is a perfect emitter and 0.0 is a perfect reflector. The value of the emissivity is equal to one minus the reflectivity if the object does not transmit. As an example, if an object has an emissivity of 0.9, it will emit 90% of the IR energy emitted by a perfect emitter, while it reflects 10% of the energy incident upon its surface.

An IR system cannot distinguish between emitted and reflected energy. The user is only interested in measuring the target's emitted energy, which is a function of the object's temperature. Many IR temperature measurement systems allow the user to mathematically compensate for the reflected IR energy by entering an estimated emissivity value. The user should always keep in mind that the source of the reflected IR energy can have a significant impact upon the absolute accuracy of the temperature measurement. Some systems allow the operator to specify the temperature of the reflected source, while others use a nominal ambient temperature value. The emissivity value is best determined experimentally, by collecting representative values of the emissivity for various objects of interest. Emissivity data provided by the manufacturer can also be satisfactorily utilized. As a general rule, most painted, dirty, or corroded objects have a high emissivity value (0.7–0.9). Severe corrosion, while highly emissive, can form an insulating layer that can conceal the true target temperature. For painted objects, the gloss or shine of the coating is more indicative of the IR emissivity than is the color. As a general rule, color does not impact the IR emissivity. Shiny metals generally have a low emissivity value.

The geometry of the measurement setup (angle of incidence) is important because it defines the source of the reflected IR energy. To a lesser extent, it also influences how the surface reflects the IR energy. Regardless of the angle of incidence, the user should note what source is reflected by the object of interest. When measuring

Copyright The Institute of Electrical and Electronics Engineers, Inc.
Provided by IHS under license with IEEE
No reproduction or networking permitted without license from IHS Not for Resale

temperatures outdoors, care should be taken to eliminate reflections from the sun. Reflected IR energy is not to be confused with actual solar gain, where the sun's radiance actually increases the object's temperature. Discrimination of reflections can be accomplished by moving the point of observation 90°.

Round or cylindrical objects can be especially difficult to measure. Depending on the surface, an accurate temperature may be available only over a small portion of the object. This effect is clear when using an imaging system, but spot and line scan systems make it very difficult for the user to visualize the geometrical effect. An extremely valuable practice is to measure the temperature from several different positions to minimize the chance of error.

The maximum distance between the IR instrument and the target of interest is determined by the instrument configuration, the stand-off distance, and the size of the target. All of the IR systems discussed in this annex have a minimum target size for which the temperature can be accurately measured.

For spot radiometers, the measurement region is relatively large and is delineated in the optical viewer of the sensor or described in the specifications. The manufacturer's recommendations should be followed so that only the object of interest is measured, and the surrounding background is not averaged in with the desired object's temperature.

Imagers and line scan systems have a relatively small portion of the field-of-view defined as the pixel, resolution element size, or instantaneous field-of-view. This small element is similar to the "spot" discussed above for spot radiometers except that it is very small in comparison. Even though it is small, it may view more than one object at one time. Many systems are provided with a manual that discusses the importance of measuring temperatures with several pixels aligned on the target. Any such guidelines should be followed to maximize measurement accuracy. Even though a thin or small object such as a bushing connector can be seen in the image of the instrument, it does not follow that the measured temperature is accurate unless enough pixels view only the target, and not the target and background together. This becomes more important as the distance between the instrument and the object of interest increases. Therefore, high spatial resolution is very desirable.

The following temperature rises above ambient have been found to be practical during infrared inspections:

Temperature rise above ambient (°C)	**Recommendation**
0–10	Repair in regular maintenance schedule; little probability of physical damage.
11–39	Repair in near future. Inspect for physical damage.
40–75	Repair in the immediate future. Disassemble and check for probable damage.
>76	Critical problem; repair immediately.

Copyright The Institute of Electrical and Electronics Engineers, Inc.
Provided by IHS under license with IEEE
No reproduction or networking permitted without license from IHS
Not for Resale