IEEE Std 515™-2004
(Revision of
IEEE Std 515-1997)

IEEE Standards

515™

IEEE Standard for the Testing, Design, Installation, and Maintenance of Electrical Resistance Heat Tracing for Industrial Applications

IEEE Industry Applications Society

Sponsored by the
Petroleum and Chemical Industry Committee



Published by
The Institute of Electrical and Electronics Engineers, Inc.
3 Park Avenue, New York, NY 10016-5997, USA

14 May 2004

Print: SH95209
PDF: SS95209

Copyright The Institute of Electrical and Electronics Engineers, Inc.
Provided by IHS under license with IEEE
No reproduction or networking permitted without license from IHS

Not for Resale

IEEE Std 515™-2004
(Revision of
IEEE Std 515-1997)

IEEE Standard for the Testing, Design, Installation, and Maintenance of Electrical Resistance Heat Tracing for Industrial Applications

Sponsor

Petroleum and Chemical Industry Committee
of the
IEEE Industry Applications Society

Approved 9 February 2004

IEEE-SA Standards Board

Abstract: Specific testing requirements for qualifying electrical resistance heating cables and heating devices for use in industrial applications, as well as a basis for electrical and thermal design, are included. Applications include unclassified, and both North American and Zone classified areas.
Keywords: constant wattage heaters, electrical design, heating cable, heat loss, heat tracing, parallel heating cables, pipelines, series heating cables, self-regulating heating cables, surface heating devices, thermal design, vessel heater

---

The Institute of Electrical and Electronics Engineers, Inc.
3 Park Avenue, New York, NY 10016-5997, USA

Copyright © 2004 by the Institute of Electrical and Electronics Engineers, Inc.
All rights reserved. Published 14 May 2004. Printed in the United States of America.

IEEE is a registered trademark in the U.S. Patent & Trademark Office, owned by the Institute of Electrical and Electronics Engineers, Incorporated.

National Electrical Code and NEC are both registered trademarks in the U.S. Patent & Trademark Office, owned by the National Fire Protection Association, Incorporated.

Print: ISBN 0-7381-3973-4 SH95209
PDF: ISBN 0-7381-3974-2 SS95209

No part of this publication may be reproduced in any form, in an electronic retrieval system or otherwise, without the prior written permission of the publisher.

Copyright The Institute of Electrical and Electronics Engineers, Inc.
Provided by IHS under license with IEEE
No reproduction or networking permitted without license from IHS
Not for Resale

IEEE Standards documents are developed within the IEEE Societies and the Standards Coordinating Committees of the IEEE Standards Association (IEEE-SA) Standards Board. The IEEE develops its standards through a consensus development process, approved by the American National Standards Institute, which brings together volunteers representing varied viewpoints and interests to achieve the final product. Volunteers are not necessarily members of the Institute and serve without compensation. While the IEEE administers the process and establishes rules to promote fairness in the consensus development process, the IEEE does not independently evaluate, test, or verify the accuracy of any of the information contained in its standards.

Use of an IEEE Standard is wholly voluntary. The IEEE disclaims liability for any personal injury, property or other damage, of any nature whatsoever, whether special, indirect, consequential, or compensatory, directly or indirectly resulting from the publication, use of, or reliance upon this, or any other IEEE Standard document.

The IEEE does not warrant or represent the accuracy or content of the material contained herein, and expressly disclaims any express or implied warranty, including any implied warranty of merchantability or fitness for a specific purpose, or that the use of the material contained herein is free from patent infringement. IEEE Standards documents are supplied "**AS IS**."

The existence of an IEEE Standard does not imply that there are no other ways to produce, test, measure, purchase, market, or provide other goods and services related to the scope of the IEEE Standard. Furthermore, the viewpoint expressed at the time a standard is approved and issued is subject to change brought about through developments in the state of the art and comments received from users of the standard. Every IEEE Standard is subjected to review at least every five years for revision or reaffirmation. When a document is more than five years old and has not been reaffirmed, it is reasonable to conclude that its contents, although still of some value, do not wholly reflect the present state of the art. Users are cautioned to check to determine that they have the latest edition of any IEEE Standard.

In publishing and making this document available, the IEEE is not suggesting or rendering professional or other services for, or on behalf of, any person or entity. Nor is the IEEE undertaking to perform any duty owed by any other person or entity to another. Any person utilizing this, and any other IEEE Standards document, should rely upon the advice of a competent professional in determining the exercise of reasonable care in any given circumstances.

Interpretations: Occasionally questions may arise regarding the meaning of portions of standards as they relate to specific applications. When the need for interpretations is brought to the attention of IEEE, the Institute will initiate action to prepare appropriate responses. Since IEEE Standards represent a consensus of concerned interests, it is important to ensure that any interpretation has also received the concurrence of a balance of interests. For this reason, IEEE and the members of its societies and Standards Coordinating Committees are not able to provide an instant response to interpretation requests except in those cases where the matter has previously received formal consideration. At lectures, symposia, seminars, or educational courses, an individual presenting information on IEEE standards shall make it clear that his or her views should be considered the personal views of that individual rather than the formal position, explanation, or interpretation of the IEEE.

Comments for revision of IEEE Standards are welcome from any interested party, regardless of membership affiliation with IEEE. Suggestions for changes in documents should be in the form of a proposed change of text, together with appropriate supporting comments. Comments on standards and requests for interpretations should be addressed to:

Secretary, IEEE-SA Standards Board

445 Hoes Lane

P.O. Box 1331

Piscataway, NJ 08855-1331USA

NOTE—Attention is called to the possibility that implementation of this standard may require use of subject matter covered by patent rights. By publication of this standard, no position is taken with respect to the existence or validity of any patent rights in connection therewith. The IEEE shall not be responsible for identifying patents for which a license may be required by an IEEE standard or for conducting inquiries into the legal validity or scope of those patents that are brought to its attention.

Authorization to photocopy portions of any individual standard for internal or personal use is granted by the Institute of Electrical and Electronics Engineers, Inc., provided that the appropriate fee is paid to Copyright Clearance Center. To arrange for payment of licensing fee, please contact Copyright Clearance Center, Customer Service, 222 Rosewood Drive, Danvers, MA 01923 USA; +1 978 750 8400. Permission to photocopy portions of any individual standard for educational classroom use can also be obtained through the Copyright Clearance Center.

--`,,`,,`-`-`,,`,,`,`,,`---
Copyright The Institute of Electrical and Electronics Engineers, Inc.
Provided by IHS under license with IEEE
No reproduction or networking permitted without license from IHS
Not for Resale

Introduction

(This introduction is not part of IEEE Std 515-2004, IEEE Standard for the Testing, Design, Installation, and Maintenance of Electrical Resistance Heat Tracing for Industrial Applications.)

The scope of this standard includes specific testing requirements for qualifying electrical resistance heating cables and heating devices for use in industrial applications, as well as a basis for electrical and thermal design. Applications include unclassified, and both North American Division and Zone classified areas.

This document was first published as a recommended practice in 1983. In 1989, it was elevated to a standard, and added Division 1 heating cables.

In 1997, standard was expanded to include American classified zone heaters. A 32-week long benchmark test was added to provide a thermal shock cycling test. This test established a minimum performance criteria for new products and offered a system validate product temperature ratings claimed by manufacturers, and provided a minimum acceptable level of quality/performance by the heating devices.

Notice to users

Errata

Errata, if any, for this and all other standards can be accessed at the following URL: http://standards.ieee.org/reading/ieee/updates/errata/index.html. Users are encouraged to check this URL for errata periodically.

Interpretations

Current interpretations can be accessed at the following URL: http://standards.ieee.org/reading/ieee/interp/index.html.

Participants

The following is a list of participants in the Industrial Heat Tracing Working Group:

David O. (Dusty) Brown, *Co-Chair*
Richard H. Hulett, *Co-Chair*

Roger Beam
Howard Bradfield
Bill Hanthorn
Katy Holdredge
Ben Johnson
Andrew Lozinski
Will McBride
Satish Parikh
Lloyd Parks
Steven Prisby
N. R. (Bob) Rafferty
Don Reed
Robert Seitz
Sukanta Sengupta
Umesh Sopory
Malcom Tubener
John Turner
Clinton Veit
Wayne Williams

Copyright © 2004 IEEE. All rights reserved.

Copyright The Institute of Electrical and Electronics Engineers, Inc.
Provided by IHS under license with IEEE
No reproduction or networking permitted without license from IHS
Not for Resale

The following members of the individual balloting committee voted on this standard. Balloters may have voted for approval, disapproval, or abstention.

George Alexander
Thomas Blair
James Daly
Byron Davenport
Kimberly Eastwood
Amir El-Sheikh
Carl Fredericks
Richard H. Hulett
Ben Johnson
Robert Konnik
Andrew Lozinski
Paul Myers
Funso Olorunyomi
Lorraine Padden
Ashley Peacock
John Propst
Frank Rocchio
James Ruggieri
Chet Sandberg
Thomas Shaw
Robert Turner
Wayne Williams

When the IEEE-SA Standards Board approved this standard on 9 February 2004, it had the following membership:

Don Wright, *Chair*
Vacant, *Vice Chair*
Judith Gorman, *Secretary*

Chuck Adams
H. Stephen Berger
Mark D. Bowman
Joseph A. Bruder
Bob Davis
Roberto de Boisson
Julian Forster*
Arnold M. Greenspan
Mark S. Halpin
Raymond Hapeman
Richard J. Holleman
Richard H. Hulett
Lowell G. Johnson
Joseph L. Koepfinger*
Hermann Koch
Thomas J. McGean
Steve M. Mills
Daleep C. Mohla
Paul Nikolich
T. W. Olsen
Ronald C. Petersen
Gary S. Robinson
Frank Stone
Malcolm V. Thaden
Doug Topping
Joe D. Watson

*Member Emeritus

Also included are the following nonvoting IEEE-SA Standards Board liaisons:

Alan Cookson, *NIST Representative*
Satish K. Aggarwal, *NRC Representative*

Noelle D. Humenick
IEEE Standards Project Editor

Copyright © 2004 IEEE. All rights reserved.
Copyright The Institute of Electrical and Electronics Engineers, Inc.
Provided by IHS under license with IEEE
No reproduction or networking permitted without license from IHS
Not for Resale

Contents

1. Overview 1

1.1 Scope 1
1.2 Purpose 2

2. References 2

3. Definitions 2

4. General product testing 6

4.1 Type test—General purpose tests 6
4.2 Type test—verification of sheath temperatures 14
4.3 Specific type test requirements for hazardous (classified) locations 16
4.4 Routine tests 18

5. Marking and installation instructions 19

5.1 Product markings for heating devices 19
5.2 Markings for field assembled components 19
5.3 Installation Instructions 20

6. Design 20

6.1 Process considerations 20
6.2 Environmental/site considerations 21
6.3 Thermal insulation and heat-loss considerations 21
6.4 Maximum temperature determination 25
6.5 Stabilized and controlled designs 27
6.6 Design information 28
6.7 Power system 30
6.8 Special considerations 31
6.9 Control and monitoring considerations 34
6.10 Division 1 and Zone 1 design requirements 37
6.11 Safety shower design requirements 38

7. Installation 38

7.1 Personnel 38
7.2 Receiving and storage of materials 38
7.3 Scheduling of installation 39
7.4 General installation recommendations 39
7.5 Special Division 1 and Zone 1 installation requirements 40
7.6 Controls and sensors 42
7.7 Cable testing after installation 42
7.8 Thermal insulation—Recommendations 42
7.9 Functional check and field documentation—Recommendations 43

Copyright © 2004 IEEE. All rights reserved.

Copyright The Institute of Electrical and Electronics Engineers, Inc.
Provided by IHS under license with IEEE
No reproduction or networking permitted without license from IHS
Not for Resale

8. Maintenance 44

8.1 General maintenance recommendations 44
8.2 Division 1/Zone 1 maintenance recommendations 44
8.3 Visual inspection 44
8.4 Periodic operational check 44
8.5 Record keeping 45

Annex A (informative) Bibliography 46

Annex B (informative) Pipe heat-loss considerations 48

Annex C (informative) Vessel heat-loss considerations 54

Annex D (informative) Heat-up considerations 58

Annex E (informative) Method to determine equivalent thicknesses of insulating cements 60

Annex F (informative) Type test matrix for Clause 4 61

Annex G (informative) Design basic data—Example (see 6.6) 63

Annex H (informative) Heater installation record—Example (see 7.2.2) 64

Annex I (informative) Division 1/Zone 1—Checklist example (see 7.5) 65

Annex J (informative) Heater commissioning record—Example (see 7.9) 66

Annex K (informative) Maintenance log record—Example (see 8.5.3) 67

Copyright © 2004 IEEE. All rights reserved.

Copyright The Institute of Electrical and Electronics Engineers, Inc.
Provided by IHS under license with IEEE
No reproduction or networking permitted without license from IHS
Not for Resale

IEEE Standard for the Testing, Design, Installation, and Maintenance of Electrical Resistance Heat Tracing for Industrial Applications

1. Overview

1.1 Scope

This standard provides requirements for the testing, design, installation, and maintenance of electrical resistance heat tracing in general industries as applied to pipelines, vessels, pretraced and thermally insulated instrument tubing and piping, and mechanical equipment. The electrical resistance heat tracing is in the form of series heating cables, parallel heating cables, and surface heating devices. In this standard, the terms *hazardous (classified) locations* and *potentially flammable atmospheres* refer to the same conditions. The requirements also include test criteria to determine the suitability of these heating devices utilized in industrial applications as applied in unclassified (ordinary) and hazardous (classified) locations as follows:

Class I[1]

Division 1

Division 2

Zone 1

Zone 2

Class II

Division 1

Division 2

Class III

Division 1

Division 2

Unclassified (ordinary)

[1]Class I is a term used with zone locations in the USA and Canada.

Copyright © 2004 IEEE. All rights reserved.

Copyright The Institute of Electrical and Electronics Engineers, Inc.
Provided by IHS under license with IEEE
No reproduction or networking permitted without license from IHS
Not for Resale

1.2 Purpose

The provisions of this standard should ensure that process, fluid, or material temperatures are maintained and provide electrical, thermal, and mechanical durability to the heat-tracing system, such that in normal use its performance is reliable and poses no danger to the user or surroundings. This standard is to serve as a complementary standard to those national and international standards addressing electrical resistance heat tracing, such as the following:

NFPA 70-2002, National Electrical Code®, NEC®, Article 427.

EN 50019-2000 [B8].[2]

IEC 62086-1:2001 [B18].

IEC 62086-2:2001 [B19].

IEC 60079-0:2004 [B14].

IEC 60079-7:2001 [B16].

2. References

This standard shall be used in conjunction with the following publications. When the following standards are superseded by an approved revision, the revision shall apply.

ASTM D 5025-1999, A Laboratory Burner Used for Small-Scale Burning Tests on Plastic Materials.[3]

ASTM D 5207-2003, Standard Practice for Confirmation of 20-mm (50-w) and 125-mm (500-w) Test Flames for Small-Scale Burning Tests on Plastic Materials.

NFPA 70-2002, National Electrical Code® (NEC®).[4]

NFPA 325-1994, Guide to Fire Hazard Properties of Flammable Liquids, Gases, and Volatile Solids.

NFPA 497M-1991, Classification of Gases, Vapors, and Dusts for Electrical Equipment in Hazardous (Classified) Locations.

3. Definitions

The following definitions apply to the subject matter presented in this standard.

3.1 ambient temperature: The temperature surrounding the object under consideration. Where an electrical heating device is enclosed in thermal insulation, the ambient temperature is the temperature exterior to the thermal insulation.

---

[2]The numbers in brackets correspond to those of the bibliography in Annex A.

[3]ASTM publications are available from the American Society for Testing and Materials, 100 Barr Harbor Drive, West Conshohocken, PA 19428-2959, USA (http://www.astm.org/).

[4]The NEC is published by the National Fire Protection Association, Batterymarch Park, Quincy, MA 02269, USA (http://www.nfpa.org/). Copies are also available from the Institute of Electrical and Electronics Engineers, 445 Hoes Lane, P.O. Box 1331, Piscataway, NJ 08855-1331, USA (http://standards.ieee.org/).

 Copyright © 2004 IEEE. All rights reserved.

Copyright The Institute of Electrical and Electronics Engineers, Inc.
Provided by IHS under license with IEEE
No reproduction or networking permitted without license from IHS Not for Resale

3.2 braid or sheath: Metallic braid, metallic sheath, or other equivalent electrically conductive material intended to provide an electrical path to operate an electrical protection device.

3.3 certifying agency: Organization that validates that equipment meets tests and standards.

3.4 cold lead: An electrically insulated conductor used to connect a heating conductor to the branch-circuit conductors and designed so as not to produce appreciable heat.

3.5 connections: Terminations and splices used to attach a heating device to power wiring or to connect sections of devices.

3.6 dead leg: A segment of process piping that is not in the normal flow pattern.

3.7 Division 1: Terminology used for classification of an industrial area in which flammable gases or vapors, flammable liquids, combustible dusts, or ignitable fibers or flyings can be present under normal conditions, or from frequent breakdowns, or where failure of equipment could release materials and create simultaneous failure of electrical equipment.

NOTE—See the NEC for a detailed definition.[5]

3.8 Division 2: Terminology used for classification of an industrial area in which flammable gases or vapors, flammable liquids, combustible dusts, or ignitable fibers or flyings will only be present under abnormal conditions.

NOTE—See the NEC for a detailed definition.

3.9 electrical insulation: A dielectric material that insulates each conductor from other conductors or from conductive parts at or near earth potential.

3.10 electrical resistance heat tracing: The utilization of electric heating cables, other electric heating devices, and support components that are externally applied and used to maintain or raise the temperature of fluids/materials in piping and associated equipment.

3.11 end termination connection: The termination applied to the end of a heating cable that may be heat producing, opposite to where the power is supplied.

3.12 factory fabricated: A heating device assembled by the manufacturer, including end terminations and connections.

3.13 field assembled: A heating device supplied in bulk form with terminating components assembled on site.

3.14 heating device: Heating cable or surface heating unit.

3.15 heat loss: A quantitative value of energy flow from a pipe, vessel, or equipment to the surrounding ambient.

3.16 heat sink: A part that conducts and dissipates heat away from the pipe or equipment. Heat sinks, as related to pipe heating systems, can be pipe supports, valve operators, etc.

3.17 heat-tracing circuit: A heat-tracing circuit is comprised of one or more heating devices or segments connected to branch wiring of a single-circuit protection device.

[5]Information on references can be found in Clause 2.

Copyright © 2004 IEEE. All rights reserved.

Copyright The Institute of Electrical and Electronics Engineers, Inc.
Provided by IHS under license with IEEE
No reproduction or networking permitted without license from IHS Not for Resale

3.18 heat-transfer aids: Thermally conductive materials, such as metallic foils or heat-transfer cements, used to increase the heat-transfer rates from the heating devices to the process piping or equipment.

3.19 high-limit temperature: The maximum allowable temperature, including the piping, the fluid, and the heating system.

3.20 integral components: Factory fabricated or field installed electrical terminations and connections, such as heat shrink terminations, cold-lead connections, molded-end seals, or splices, which conform to the general shape of the heating device and are exposed to the same environments as the heating device.

3.21 maintain temperature: Specified temperature of the fluid or process material that the heat tracing is designed to hold at equilibrium under specified design conditions.

3.22 maximum continuous exposure temperature: The highest temperature to which a component of the heat-tracing system may be continuously exposed (heater de-energized).

3.23 maximum intermittent temperature (energized or de-energized): The highest allowable temperature to which a heating device or components may be exposed for a period of time as declared by the manufacturer.

3.24 maximum maintain temperature: Specified maximum temperature of a surface or process that the heating device is capable of maintaining continuously.

3.25 operating voltage: The actual voltage applied to the heating device when in service.

3.26 overjacket: The outermost continuous layer of insulating material applied to protect against corrosion and enhance mechanical protection.

3.27 oversize insulation: A term applied to thermal insulation when the inside diameter of the thermal insulation must be larger than the nominal outside diameter of a particular pipe so as to accommodate the heating cable.

3.28 parallel heating cable: Heating elements that are electrically connected in parallel, either continuously or in zones, so that the watt density per lineal length is maintained, irrespective of any change in length for the continuous type or for any number of discrete zones.

3.29 power connection: The connection between the heating device and incoming power.

3.30 rated output: Power/unit length of heating device or total power, at rated voltage, and temperature (if required), normally expressed as W/m (W/ft) or kW.

3.31 rated voltage: The voltage to which operating and performance characteristics of a heating device is referred.

3.32 routine test: A test performed by the manufacturer of the heating device on all devices during or after the production process.

3.33 runaway pipe temperature: The highest equilibrium pipe temperature that occurs when the heating device is continuously energized at the maximum ambient temperature.

3.34 series heating cable: Heating elements that are electrically connected in series with a single current path and have a specific resistance at a given temperature for a given length.

 Copyright © 2004 IEEE. All rights reserved.

Copyright The Institute of Electrical and Electronics Engineers, Inc.
Provided by IHS under license with IEEE
No reproduction or networking permitted without license from IHS Not for Resale

3.35 sheath: A uniform and continuous covering, metallic or nonmetallic, enclosing the insulated conductor(s), used to protect the cable against mechanical damage and influences from the surroundings (corrosion, moisture, etc.). *See:* **overjacket.**

3.36 sheath temperature: The temperature of the outermost continuous covering of a heating cable or surface heating device that may be exposed to the surrounding atmosphere.

3.37 start-up current: The current response of a heating device following energization.

3.38 surface heating device (heating panel): A heater comprising series or parallel connected elements having sufficient flexibility to conform to the shape of the surface to be heated.

3.39 tee connection: The connection of a heater in series or parallel to accommodate a branch on a pipe or equipment.

3.40 temperature class (T-rating): One of the values of temperature allocated to electrical heating devices derived from a system of classification according to the maximum surface temperature of the heater. Also referred to as T-class, identification number, T-rating, and temperature code.

3.41 temperature sensor (sensing element): A device that responds to temperature and provides an electrical signal or mechanical operation.

3.42 thermal insulation: Material having air- or gas-filled pockets, void spaces, or heat-reflective surfaces that, when properly applied, will retard the transfer of heat with reasonable effectiveness under ordinary conditions.

3.43 traced tube bundle: Pretraced and thermally insulated instrument tubing that is used for fluid transport, containment, or conditioning system. The bundle is factory fabricated and consists of tubing, heating cable, thermal insulation, and weatherproof jacket.

3.44 type test: A test or series of tests carried out on heating devices and accessories, representative of a type, to determine compliance of the design, construction, and manufacturing methods within the requirements of this standard, IEEE Std 515-2004.

3.45 weather barrier: Material that, when installed on the outer surface of thermal insulation, protects the insulation from water or other liquids; physical damage caused by sleet, wind or mechanical abuse; and deterioration caused by solar radiation or atmospheric contamination.

3.46 Zone 0: Terminology used for classification of an industrial area in which an explosive atmosphere is present continuously, or present for long periods of time during normal operation.

NOTE—See the NEC, Article 505, and IEC 60079-10:2002 [B17] for a detailed definition.

3.47 Zone 1: Terminology used for classification of an industrial area in which an explosive atmosphere is likely to exist under normal operation.

NOTE—See the NEC, Article 505, and IEC 60079-10:2002 [B17] for a detailed definition.

3.48 Zone 2: Terminology used for classification of an industrial area in which an explosive atmosphere is not likely to occur in normal operation, and if it does, it will exist only for a short period.

NOTE—See the NEC, Article 505, and IEC 60079-10:2002 [B17] for a detailed definition.

Copyright © 2004 IEEE. All rights reserved.

Copyright The Institute of Electrical and Electronics Engineers, Inc.
Provided by IHS under license with IEEE
No reproduction or networking permitted without license from IHS Not for Resale

4. General product testing

4.1 Type test—General purpose tests

The following tests are intended to qualify heating devices for the applications within the scope of this standard for unclassified (ordinary locations). Samples of heating cable at least 3 m in length or representative surface heater section, unless otherwise specified, shall be selected for testing. Tests shall be conducted at room temperature between 10 °C–40 °C unless otherwise noted. Annex F provides a matrix of test requirements for each heating device application.

Connections and end terminations may be identified as integral components of a heating device or may be identified separately. Integral components, whether intended to be factory fabricated or field assembled, shall be subjected to the same type tests as the heating device, except where otherwise noted. System components, other than those identified as integral, shall be evaluated in accordance with national and international standards relevant to their construction and use.

4.1.1 Dielectric test

The dielectric test shall be performed on the heating device in accordance with Table 1.

Table 1—Dielectric test values

Rated voltage	Test voltage (Vac rms)
<30 V rms	500
<60 Vdc	500
≥30 V rms	$2E + 1000$
≥60 Vdc	$\sqrt{2}\,E + 1000$

The test voltage where E = rated voltage shall be applied at a rate of rise neither less than 100 V/s nor more than 200 V/s and maintained for 1 min without dielectric breakdown.

The test voltage waveform shall be essentially sinusoidal, with a frequency of 45–65 Hz. The test voltage shall be applied between the heating device's conductors and the metallic braid, sheath, or equivalent electrically conductive material, or a specially applied conductive metal ground plane. Alternatively, the dielectric test may be conducted by submerging the heating device in tap water at room temperature (resistivity typically 50 000 Ω·cm). The test voltage shall be applied between the heating conductors and the water.

4.1.2 Insulation resistance test

The insulation resistance shall be measured on the above sample after the dielectric test specified in 4.1.1. The resistance of the insulation shall be measured between conductors and the metallic braid, sheath, or equivalent electrically conductive material, or a specially applied conductive metal ground plane, by means of dc voltage of 1000 Vdc for mineral insulated heaters and 2500 Vdc for polymer insulated heaters. The measured value shall not be less than 50 MΩ.

 Copyright © 2004 IEEE. All rights reserved.

Copyright The Institute of Electrical and Electronics Engineers, Inc.
Provided by IHS under license with IEEE
No reproduction or networking permitted without license from IHS Not for Resale

4.1.3 Water-resistance test

A sample shall be immersed (except at terminations, or ends where the conductors are exposed) in tap water at 10 °C–25 °C for a period of 14 days.

Within 1 h after this conditioning and while still immersed in the water, the sample shall be subjected to the dielectric test outlined in 4.1.1.

4.1.4 Integral components resistance to water

A sample of the heating device with all integral components shall be placed in a tap water flow and drain apparatus, as shown in Figure 1. For surface heating devices, a unit with cold leads shall be used. Water flow shall be initiated, and the heating device and integral components shall be completely immersed. At that point, the water flow is stopped, and the heating device is energized. The apparatus is then drained. The total time from the initiation of water flow to the completion of draining shall be no greater than 4.5 min and no less than 2.5 min. The heating device shall continue to be energized for 30 s after the water has been drained. The heating device is then de-energized, and water flow is initiated for the next cycle. The test shall be continued for a period of 24 h. After completion, the dielectric test outlined in 4.1.1 shall be performed. The immersed connections of the heating device shall be inspected to verify no evidence of water ingress.

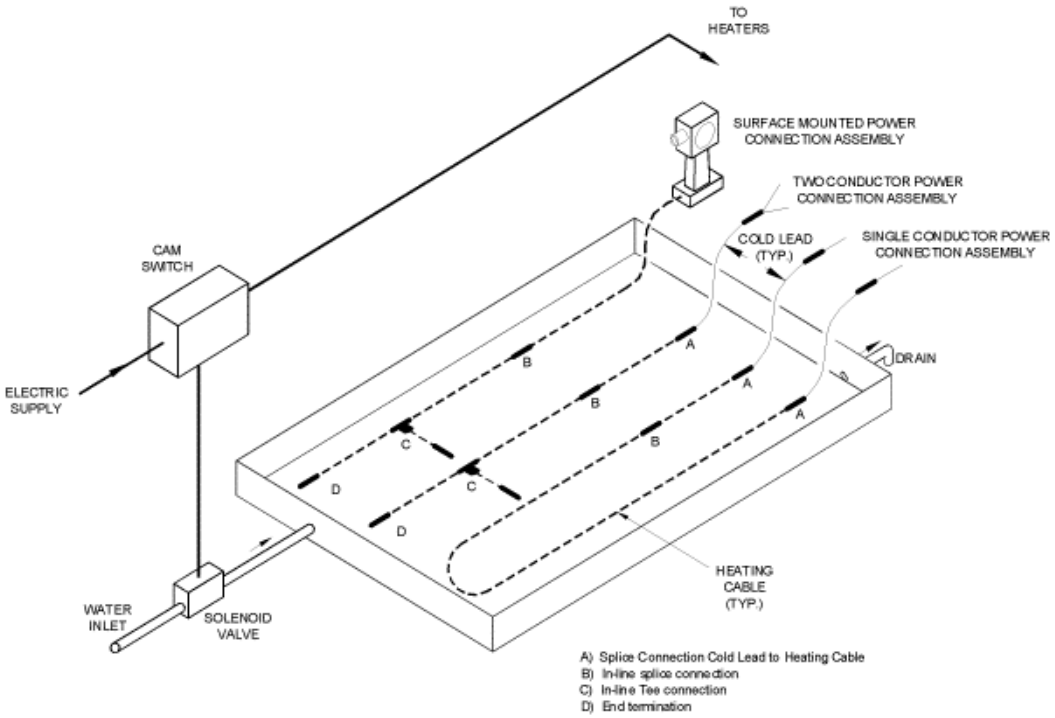

Figure 1—Heating cable termination and splice test apparatus

4.1.5 Elevated temperature exposure dielectric test

A sample of a heating device shall be placed in a forced-circulation air oven. The oven shall be heated to, and maintained at, a temperature of 25 °C ± 5 °C above the highest exposure temperature declared by the manufacturer for a period of 14 days.

The sample shall be removed from the air oven and cooled to room temperature. Heating cable samples shall be wound six close turns around a mandrel having a radius equal to twelve times the radius of the primary

Copyright © 2004 IEEE. All rights reserved.

Copyright The Institute of Electrical and Electronics Engineers, Inc.
Provided by IHS under license with IEEE
No reproduction or networking permitted without license from IHS
Not for Resale

bending plane or thickness of the heating cable. Surface heating devices, if flexible, shall be wrapped on a mandrel with a radius equivalent to the manufacturer's minimum recommended bending radius. While still on the mandrel, the sample, except at terminations or ends where the conductor is exposed, shall be submerged in tap water at 10 °C–25 °C for 5 min. While still in the tap water, the dielectric test outlined in 4.1.1 shall be performed. Rigid heating devices shall also be submerged in tap water and tested. Upon completion of the test, the sample shall have no visible cracks when examined with normal vision.

4.1.6 Thermal performance benchmark

One of the following tests shall be used to verify power output stability for all parallel heating devices.

4.1.6.1 Primary test

Three randomly selected samples representing the maximum output of all cables or surface heating devices under evaluation shall be tested. If the type of cable or surface heating device has different levels of rated voltages and wattages, then three samples each shall be selected that represent the following:

a) The lowest rated voltage level and the maximum rated output

b) The maximum rated voltage and the minimum rated output

Samples shall be terminated according to the manufacturer's specifications, such that a heating length of at least 600 mm or representative surface heating device dimensions are provided. The aging temperature of the test shall be the maximum declared maintain temperature of the heating device. The samples shall be conditioned, while energized, at the aging temperature for 120 h ± 24 h. The initial output of the samples is then to be determined by one of the three methods given in 4.1.11, with the exceptions of sample length and number of test temperature points for the procedure in item c) in 4.1.11. For this case, the samples shall be evaluated at rated voltage and at the manufacturer's stated reference temperature for the rated output. The output shall be within the manufacturer's stated output range.

The samples shall be attached to a fixture or suitable heat sink as described in item c) in 4.1.11 and insulated accordingly. The pipe or heat sink temperature shall be set to the specified aging temperature and maintained with ± 3 °C plus 1% of the temperature reading in degrees Celsius. Circulating fluid or external heating may be used to raise the fixture to the aging temperature. The samples shall be operated at rated voltage. The power supply shall be attached to a 15 min cycle timer such that the samples are energized for 12 min and de-energized for 3 min. The samples shall be exposed to this conditioning for 32 weeks (5376 h).

For heating devices with an intermittent temperature exposure rating, the samples are exposed to the same conditioning for 32 weeks, except for an 8 h excursion once each week. At the beginning of the 8 h, the samples shall be disengaged from the cycle timer. The pipe or heat sink temperature shall be increased to a temperature equal to the manufacturer's stated intermittent exposure temperature. The time allowed to increase the temperature should be no greater than 1 h. After 7 h from the beginning of the excursion, the pipe or heat sink temperature shall be decreased back to the aging temperature, again allowing no more than 1 h for the operation. Where the intermittent temperature rating is based on the heating device being energized, then the heating device shall be continuously energized during this temperature excursion, except during cool down back to the maximum maintain temperature. Where the intermittent temperature rating is based on the heating device being de-energized, the exposure cycle is conducted in a de-energized condition. At the end of the 8 h excursion, the samples shall be reengaged to the cycle timer. The excursions should occur on the same day each week.

At the end of the 32 weeks of operation at the continuous rated temperature, the output of the samples shall be determined by the same procedure as utilized for the initial readings. The heating device samples shall maintain a power level within plus 20% or minus 25% of the initial measured output.

 Copyright © 2004 IEEE. All rights reserved.

Copyright The Institute of Electrical and Electronics Engineers, Inc.
Provided by IHS under license with IEEE
No reproduction or networking permitted without license from IHS Not for Resale

4.1.6.2 Alternative test

The test apparatus shall consist of a metal platen(s) with the ability to change temperature within specified levels. The platen(s) shall be sized to expose all parts of the heating device samples, which would be exposed under normal installation conditions to the temperature levels required by this procedure. The test apparatus shall insure that the heating device samples are in intimate contact with the platen. The test apparatus may be supplied with a sample mounting fixture. Offsets may be built into the fixture or platen(s) to accommodate end termination/power transition fittings/boots, if provided, where their size profile exceeds the heating device profile. The apparatus shall allow energizing of the heating device samples as required during the test procedure.

The samples shall be thermally insulated on the side not facing the platen so as to ensure effective heat transfer from the platen to the heating device samples.

The temperature of the platen(s) shall be uniformly controlled to a maximum tolerance of ± 5 °C for platen temperatures less than 100 °C or 5% of the maximum continuous operating temperature if above 100 °C.

The platen previously described may be a flat metal plate, a metal pipe, or a metal surface typical of the majority of applications for the heating device being tested.

The heating device samples shall be randomly selected and shall be a minimum of 0.3 m in length. Where the heating device is irregular in shape, such as a surface heating device, the heating device sample shall consist of at least one heating unit.

If the heating devices are part of a heating device product range, with common materials (with materials having the same performance ratings) and construction, which have different levels of rated voltages and power outputs, then three samples each shall be selected that represent the following:

a) The lowest rated voltage level and the maximum rated power output

b) The highest rated voltage and the minimum rated power output

Heating device samples may be conditioned at the maximum rated voltage for up to 150 h at the manufacturer’s declared maximum continuous operating temperature prior to starting the test.

The heating device samples shall be installed on the sample mounting fixture or directly applied to the platen. The samples shall be powered at the maximum rated voltage. The temperature of the platen shall be 23 °C ± 5 °C. The initial power output of the samples shall be determined by measuring voltage and current after the device has reached equilibrium.

The heating device samples of continuous parallel construction, while still installed on the sample mounting fixture or platen and energized at the maximum rated voltage, shall be temperature cycled by alternately exposing the samples to platen(s) temperatures corresponding to 23 °C ± 5 °C and the maximum continuous operating temperature. The samples may be de-energized during the cool down period.

The heating device samples of zone type parallel construction shall be temperature cycled in the same manner with the exception that the samples shall be de-energized when not being held at the maximum continuous operating temperature.

If the cycle temperature range exceeds 350 °C, the lower temperature may be set at 350 °C below the maximum continuous operating temperature.

The energized samples shall be exposed to each of these temperature extremes for a minimum of 15 min, and a transition time between extremes shall not exceed 15 min with a cycle being one complete exposure at both temperature extremes.

Copyright © 2004 IEEE. All rights reserved.

Copyright The Institute of Electrical and Electronics Engineers, Inc.
Provided by IHS under license with IEEE
No reproduction or networking permitted without license from IHS Not for Resale

A minimum of 1500 cycles shall be performed.

Following the temperature cycling, the temperature of the platen(s) shall be raised to the maximum exposure temperature (the higher of the continuous or intermittent value) declared by the manufacturer and held for a period of no less than 250 h.

Where the maximum exposure temperature is declared as *power on,* the samples shall be energized at the maximum rated voltage.

After completion of the maximum exposure testing, the heating device samples power output shall be measured, using the same method and platen temperature as used during the initial measurements. The heating device samples shall maintain a power level within plus 20% or minus 25% of the initial measured output.

4.1.7 Deformation test

A sample of the heating device as well as a sample of each type of integral components and non-heating lead (if applicable) shall be placed on a rigid steel plate. A crushing force of 1500 Newton (N) is then applied for 30 s, without shock, by means of a 6 mm diameter steel rod with hemispherical ends and a total length of 25 mm. For the test, the steel rod is laid flat on the sample, and in the case of a heating cable, it is placed across the specimen at right angles. For a cable that is oval or rectangular in shape, the widest surface shall be the surface on which the load is applied. In the case of a surface heating device, it is necessary to ensure that the steel rod rests across the active element. After a minimum time of not less than 30 s and with the proof loading continuously applied, the dielectric test outlined in 4.1.1 shall be conducted. The test voltage shall be applied between the heating device conductors and its braid or sheath.

4.1.8 Impact test

The impact test shall be conducted on a sample that is positioned on a hardened rigid steel plate and the assembly conditioned for a minimum of 4 h at the manufacturer's minimum recommended installation temperature. After conditioning and while still at the minimum recommended installation temperature, a sample shall be subjected to a 50.8 mm diameter cylindrical steel plunger with smoothly rounded edges, having a mass of 1.8 kg and allowed to free fall from a height of 762 mm, resulting in an impact energy of 13.6 Joule (J). Then the impacted portion of the sample shall be immersed in tap water at 10 °C–25 °C for 5 min, and the dielectric test outlined in 4.1.1 shall be conducted. For surface heating devices, both the heating region and cold leads shall be impacted. After testing, the sheath or dielectric insulation shall have no visible cracks when examined with normal vision.

4.1.9 Cold-bend test

This test applies only to flexible heating devices that have a stated minimum bending radius of less than 300 mm. The apparatus used for the bend test shall be as represented in Figure 2. A sample of heating cable or cold lead shall be fixed in the apparatus as shown in Figure 2. With the test sample in position, the apparatus shall be placed in a refrigerated compartment and maintained at the minimum recommended installation temperature for a period of not less than 4 h. At the end of this period, and with the sample maintained at the minimum recommended installation temperature, the sample shall be bent through 90° around one of the bending mandrels, then bent through 180° in the opposite direction over the second bending mandrel and straightened to its original position. All the bending operations shall be carried out in the same plane. This cycle of operations shall be performed three times. For heating panels, the heating region shall be bent around a mandrel equivalent to the manufacturer's minimum bending radius. When this has been completed, the sample shall be immersed in tap water at 10 °C–25 °C for 5 min, and then the dielectric test outlined in 4.1.1 shall be conducted.

Copyright © 2004 IEEE. All rights reserved.

Copyright The Institute of Electrical and Electronics Engineers, Inc.
Provided by IHS under license with IEEE
No reproduction or networking permitted without license from IHS Not for Resale

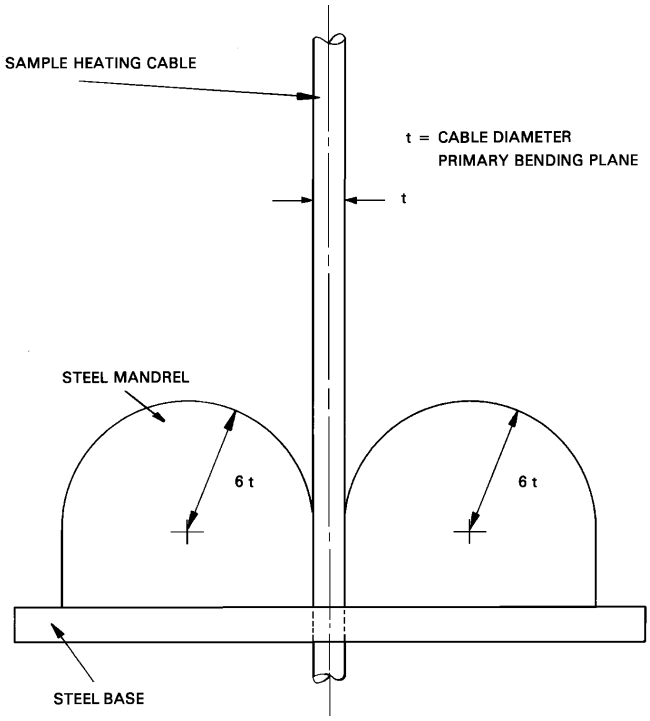

Figure 2—Cold-bend test apparatus

4.1.10 Flammability test

A flammability test shall be performed on heating devices and on heating devices with integral components. The full range of sizes shall be capable of complying with the test. The test shall be made in a room free from drafts and carried out in a minimum volume of 0.5 m^3 flame chamber or fume hood For heating cable, the sample shall be at least 450 mm in length and shall be supported in a vertical position. For surface heating devices, the sample width shall be 80 mm.

A gummed unbleached paper indicator shall be wrapped once around the sample so that it projects 20 mm from the sample. The paper indicator shall be positioned 250 mm above the point at which the inner blue cone of the flame contacts the sample. A layer of dry, pure surgical cotton not more than 6 mm in depth shall be placed underneath the sample so that the distance from the cotton to the point of the flame application is 250 mm.

A laboratory burner described in ASTM D 5025-1999 shall be used for the test. The gas flame produced by the burner is to be calibrated as described in ASTM D 5207-2003. The fuel shall be methane, propane, or natural gas, and shall be of a grade suitable for calibration to the ASTM D 5207-2003 procedure. As shown in Figure 3, the flame shall be adjusted to a 130 mm height with a 40 mm inner blue cone. The burner shall be tilted to an angle of 20° from the vertical and the flame applied to the heating device so that the tip of inner blue cone of the flame touches the specimen at a point 250 mm below the unbleached paper indicator and approximately 150 mm from the bottom of the sample. For termination assemblies, the flame shall be set such that it will contact the material at the most vulnerable point. Clamps used to support the sample shall be above the paper indicator and at least 80 mm below the point of flame application.

The flame shall be brought up to the heating device in such a manner that the vertical plane containing the major axis of the burner tube shall be at right angles to the sample. The flame shall be applied for 15 s, then removed for 15 s, until five such applications have been made.

Copyright © 2004 IEEE. All rights reserved.

Copyright The Institute of Electrical and Electronics Engineers, Inc.
Provided by IHS under license with IEEE
No reproduction or networking permitted without license from IHS
Not for Resale

The test results shall be considered satisfactory if the heating device does not support combustion for more than 1 min after the fifth application of the flame, does not burn more than 25% of the extended unbleached paper indicator, and does not ignite the cotton from burning falling particles.

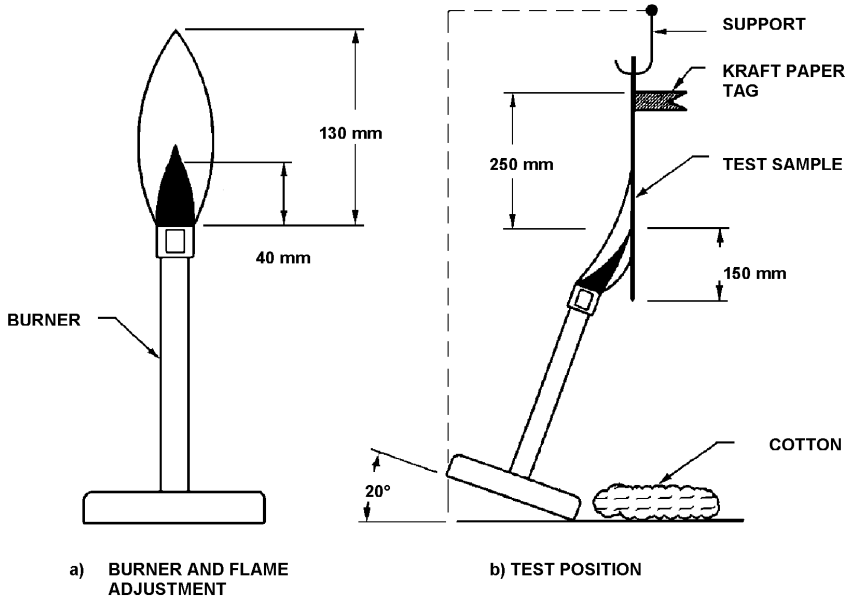

Figure 3—Flammability test

4.1.11 Verification of rated output

The rated output of the heating device shall be verified by one of the following three methods:

a) *Conductance*—The measured ac conductance or conductance per unit length, at a specified temperature, shall be within the manufacturer's declared tolerance.

b) *Resistance*—The measured dc resistance or resistance per unit length, at a specified temperature, shall be within the manufacturer's declared tolerance.

c) *Thermal*—For heating cables, the thermal output shall be measured by installation of a single 3–6 m sample of heating cable on a schedule 40 carbon steel pipe of 50 mm diameter or greater, as shown in Figure 4. The cable shall be installed per the manufacturer's instructions. The test apparatus shall be completely covered with a fiberglass thermal insulation of 25.4 mm or equivalent.

For surface heating devices, the test shall be conducted on a flat metal plate with rapid heating and cooling capability. Fiberglass thermal insulation, 25.4 mm thick, shall be installed over the surface heating device.

A suitable heat-transfer fluid in the liquid phase shall be circulated through the pipe or metal plate fixture at a sufficient rate to establish turbulent flow corresponding to a Reynolds number greater than 2300. This will establish negligible temperature difference between the fluid and the pipe temperature. Sufficient means should be utilized to maintain constant temperature of the heat-transfer fluid. These parameters shall be verified by thermocouples (T/C) placed at the entry and exit ends of the pipe. Flow velocity shall be sufficient so that the fluid temperature does not differ by more than 2 °C from end to end.

The thermal output of the heating device shall be measured at three pipe or plate temperatures over the heater operating range. The heating device shall be powered at its rated voltage and allowed to attain equilibrium. The voltage, current, fluid temperature, and sample length shall be recorded at each test temperature. Three separate determinations shall be made on separate samples. The resulting values shall be within the manufacturer's declared tolerance.

 Copyright © 2004 IEEE. All rights reserved.

Copyright The Institute of Electrical and Electronics Engineers, Inc.
Provided by IHS under license with IEEE
No reproduction or networking permitted without license from IHS Not for Resale

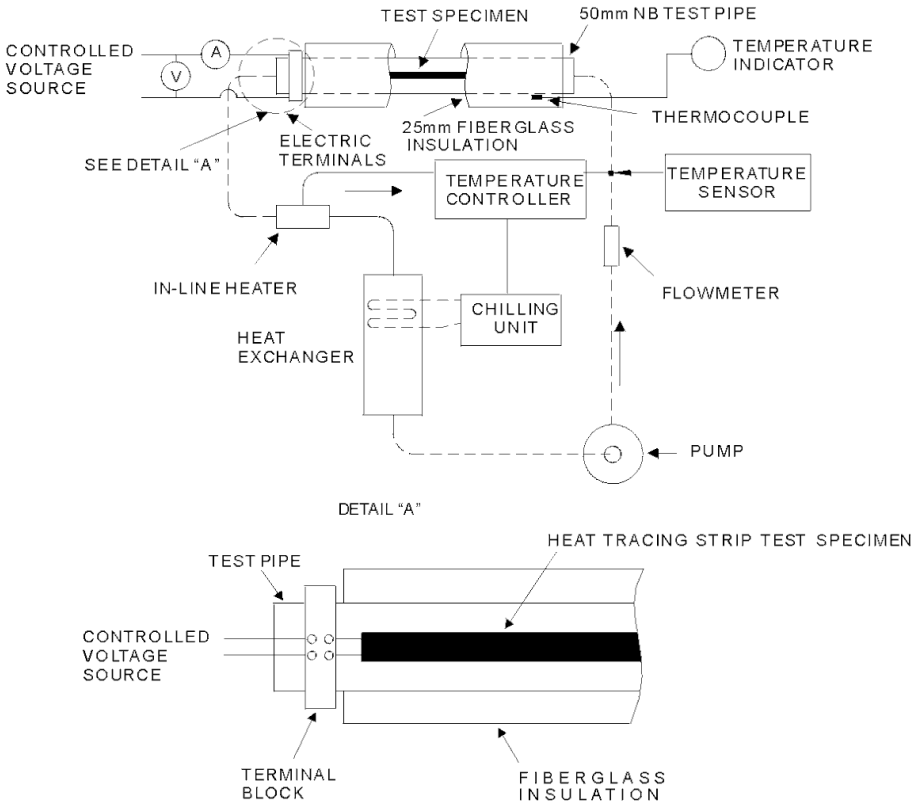

Figure 4—Verification of rated output

4.1.12 Verification of start-up current

The start-up current of the heating device shall be measured at the manufacturer's minimum designated ambient temperature. A sample of heating cable at least 1 m in length is installed per manufacturer's instructions on a minimum 50 mm diameter fluid-filled steel pipe, solid rod, or for surface heating devices, a flat metal heat sink. The testing apparatus shall be completely covered with thermal insulation and conditioned at the test temperature for at least 4 h. The apparatus described in item c) in 4.1.11 can be used for this test. After the conditioning period, rated voltage shall be applied and the time/current characteristics shall be recorded from time zero to 300 s. The time current characteristic of any of the three samples shall not be more than the value declared by the manufacturer. The samples shall be in the upper one third of the manufacturer's declared power output tolerances.

4.1.13 Verification of braid or sheath conductivity

An electrically grounding metallic braid, metallic sheath, or equivalent electrically conductive material is required as part of the heating cable construction and shall cover at least 80% of the surface. For surface heating devices (panels), an integral metallic screen grid or equivalent electrically conductive covering covering at least 80% of the exposed surface opposite the surface to be heated shall be incorporated into the construction. The resistance of at least 3 m length of heating cable shall be measured at room temperature using a four-wire resistance (Wheatstone bridge) method. A representative sample of a surface heating device shall be used. The resistance shall be equal to or less than the manufacturer's declared value. Additional considerations shall be applied by the certifying agencies for evaluation of equivalent materials other than metallic braid or sheath.

Copyright © 2004 IEEE. All rights reserved.

Copyright The Institute of Electrical and Electronics Engineers, Inc.
Provided by IHS under license with IEEE
No reproduction or networking permitted without license from IHS
Not for Resale

4.2 Type test—verification of sheath temperatures

Maximum sheath temperatures of heating devices must be determined to ensure the proper application of the heater. The maximum sheath temperature is dependent on the heater watt density, overall heat-transfer coefficient, and the runaway pipe/tank/tube bundle temperature. These factors are used by the manufacturer to determine the sheath temperatures of the heating device, as illustrated in Equation (4). Table 2 defines the operational and environmental conditions for the test for each of the types of area classifications. The maximum allowable watt density and sheath temperatures declared by the manufacturer shall be verified.

Table 2—Sheath temperature test conditions

Item	Class I, II, III		Class I			Unclassified (ordinary)
	Div. 1	Div. 2	Zone 0	Zone 1	Zone 2	
Percent of rated voltage	120	110	Note 2	110	110	100
Maximum pipe temperature for calculation	Note 1	Note 1	Note 2	Note 1, 3	Note 1, 3	Note 1
Maximum wind speed for calculation	0	0	Note 2	0	0	0

NOTES
1—The pipe temperature (T_{pr} or T_{pm}, whichever is greater) used to calculate the maximum sheath temperature (see 6.4).
2—Electric heating devices are not permitted in Zone 0 areas.
3—Maximum sheath temperature determination for both systems approach and product classification methods—test values for maximum surface temperature will have 5 °C added for test values below T3 (200 °C) and 10 °C for test values over T3 (200 °C).

One of the following two methods shall be used for determining the heating device's sheath temperatures and the resultant sheath temperature shall not exceed the declared temperature class or maximum surface temperature:

a) A systems approach, in which the product is subjected to a test condition, where the manufacturer demonstrates the ability to design and predict sheath temperatures by conducting tests on specific installations

b) A product classification approach, in which maximum sheath temperatures are generated in an artificial environment simulating worst-case conditions

4.2.1 Systems approach—design verification method

This procedure is used to validate a manufacturer's design methodology and calculations. This procedure may be repeated with varied parameters, such as insulation type and thickness, to the satisfaction of the certifying agency.

For heating cables, the test apparatus, as shown in Figure 5, shall consist of a 3 m horizontal run and 1.5 m vertical run of piping having a pipe size between 50 mm and 150 mm diameter. A flanged gate valve or equivalent (butterfly valve, globe valve, etc.) would be located in the center of the horizontal run. The vertical run should be so arranged that flanged pipe ends are in the center (see Figure 5). The heating cable shall be installed in a manner consistent with the manufacturer's installation instructions. T/C shall be used to monitor the pipe and valve surface temperatures and cable sheath temperatures. The T/C should be located at anticipated hot spots at the discretion of the certifying agency. The piping system should be insulated with a minimum of 25 mm thickness of thermal insulation and installed in accordance with the

Copyright © 2004 IEEE. All rights reserved.

Copyright The Institute of Electrical and Electronics Engineers, Inc.
Provided by IHS under license with IEEE
No reproduction or networking permitted without license from IHS Not for Resale

manufacturer's installation procedures. Pipe ends should be plugged and thermally insulated. For tubing bundles, the test apparatus shall consist of 4.5 m of traced tube bundle, with T/C located at the discretion of the certifying agency. The heating cable shall be powered at voltage conditions based on the area classification (see Table 2). System temperatures shall be allowed to stabilize and thermocouple readings recorded. The measured sheath temperatures minus the measurement uncertainty (no more than 10 °C) shall not exceed the manufacturer's calculated value.

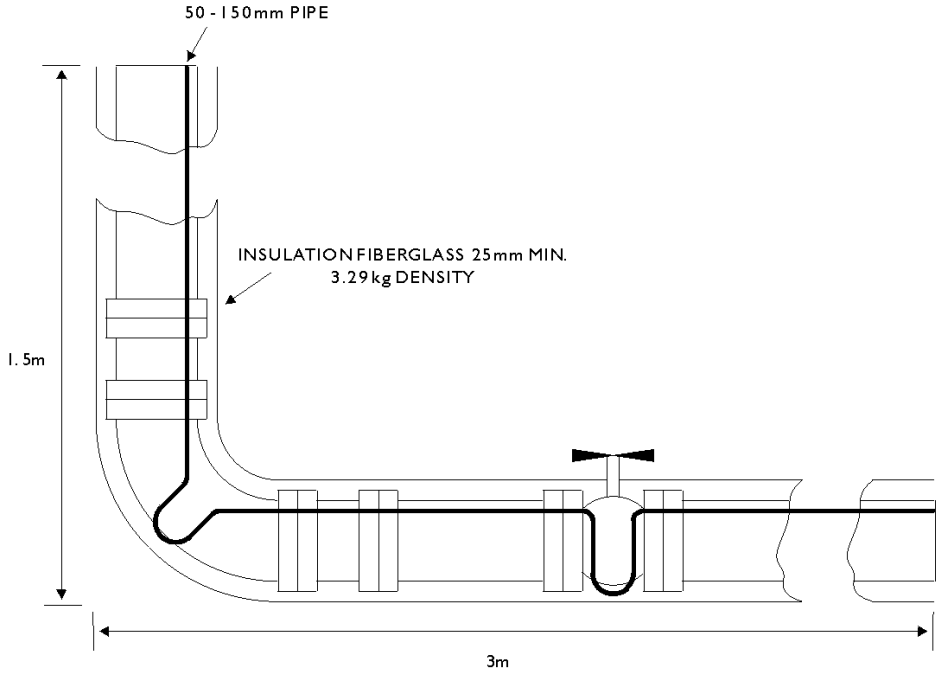

Figure 5—Verification of sheath temperature using systems approach

For surface heaters, a representative section shall be applied to a 6 mm steel plate in accordance with the manufacturer's installation instructions. The steel plate shall not extend more than 25 mm from any edge of the surface heater. T/C shall be used to monitor the temperature of the external surface of the heater. The T/C should be located at anticipated hot spots at the discretion of the certifying agency. The heated side of the plate shall be insulated with a minimum of 25 mm of thermal insulation. The plate is then located in a stable, room temperature environment. The surface heater shall be powered at voltage conditions based on the area classification according to Table 2. After stabilization, the thermocouple readings are recorded, including the local ambient temperature. The measured surface temperatures minus the measurement uncertainty (no more than 10 °C) shall not exceed the manufacturer's calculated value.

4.2.2 Product classification approach

A sample of heating cable at least 1500 mm in length is placed loosely coiled in a forced air circulation oven. For a surface heater, a representative section is placed horizontally in the oven. The sample shall be within the upper half of the heating device's thermal output tolerance. Representative T/C are used to monitor sample sheath temperatures and are placed 500 mm from each end. One additional thermocouple is used to monitor oven ambient. The heating device shall be powered at voltage conditions based on the area classification (see Table 2). The oven ambient temperature is incrementally raised from room ambient in 15 °C increments. Sufficient time is permitted at each temperature for the oven ambient and heater sheath temperatures to stabilize and attain thermal equilibrium. Oven ambient and heater sheath temperatures are recorded at each successive level until the temperature difference between the two approaches is 5 °C or less. A curve is drawn from the test data, and a straight line is drawn tangent to the curve at 5 °C temperature

Copyright © 2004 IEEE. All rights reserved.

Copyright The Institute of Electrical and Electronics Engineers, Inc.
Provided by IHS under license with IEEE
No reproduction or networking permitted without license from IHS
Not for Resale

difference point and extended to the X axis (oven temperature). The temperature read at this intercept is taken as the maximum sheath temperature, as shown in Figure 6.

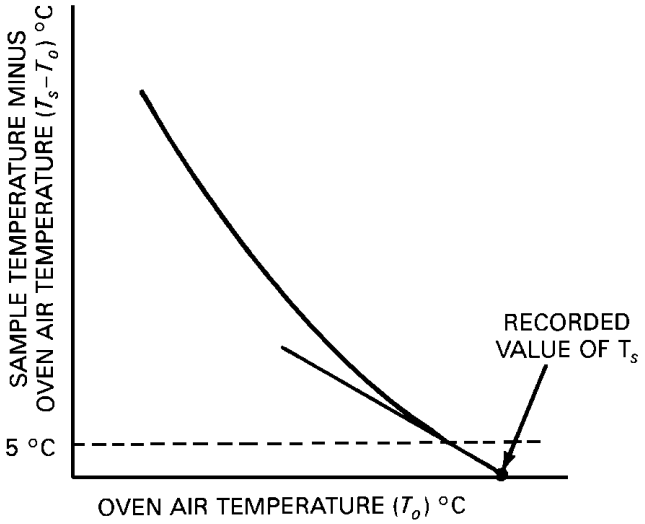

Figure 6—Maximum sheath temperature using product classification approach

4.3 Specific type test requirements for hazardous (classified) locations

Test values for certain of the type tests listed in 4.1 and 4.2 shall be adjusted for the different hazardous (classified) locations.

4.3.1 Class I, Division 1 locations

Heating devices recommended for these areas shall be tested for severe chemical exposure, impact, and static mechanical loads. Additional type testing shall be required for system components. The requirements for system components are covered in other applicable standards for equipment for use in Class I, Division 1 hazardous (classified) locations. The following tests are intended to qualify heating devices for application in these hazardous (classified) areas and are required in addition to all the type tests described in 4.1.

4.3.1.1 Verification of sheath temperatures

The sheath temperature test described in 4.2 shall be conducted in accordance with design conditions detailed in Table 2, and the resultant sheath temperature shall not exceed the declared temperature class or maximum surface temperature.

4.3.1.2 Mechanical type tests

The deformation test as described in 4.1.7 shall be conducted at 204 kg (2000 N). The impact test as described in 4.1.8 shall be conducted retaining the same impact area, however, with an increased impact energy of 27.1 J.

4.3.1.3 Chemical exposure tests

The heating device and any integral components shall be exposed (completely immersed except for the connections) to the following chemicals: acetone, ethyl acetate, isooctane, hexane, methanol, methyl ethyl ketone, methylene chloride, and toluene. The exposure duration shall be 24 h. The chemical shall be maintained at a temperature not less than 5 °C below the boiling point. Boiling points shall be obtained from NFPA 325-1994.

 Copyright © 2004 IEEE. All rights reserved.

Copyright The Institute of Electrical and Electronics Engineers, Inc.
Provided by IHS under license with IEEE
No reproduction or networking permitted without license from IHS Not for Resale

A separate heater sample including any polymeric sheath (overjacket) shall be stressed by wrapping it six close turns around a mandrel having a radius equal to 12 times the diameter of the primary bending plane of the device, and shall be exposed (completely immersed except for the ends) to each of the above chemicals. The test sample shall be removed from the fluid, allowed to stabilize for at least 1 h, and then subjected to the dielectric test outlined in 4.1.1, with the sample (except for the exposed ends) immersed in tap water at 10 °C–25 °C for 5 min. The test voltage shall be applied between the water and the metallic covering for heating device constructions with a polymeric jacket, or between the water and the heating device conductors for heater constructions without a polymeric jacket. No dielectric breakdown shall occur. Additionally, stressed samples shall have no visible cracks or other damage when examined. This test confirms the integrity of the heater jacket or sheath after chemical exposure.

An additional set of unstressed samples shall be exposed to the same chemicals in a like manner. After the exposure, the test samples shall be removed from the fluid, allowed to stabilize for at least 1 h, and then subjected to the following tests:

a) *Deformation*—The deformation test described in 4.1.7 shall be conducted on the heating device. Proof loads shall be 204 kg (2000 N).

b) *Impact*—The impact test described in 4.1.8 shall be conducted, retaining the same impact areas. The impact energy shall be 27.1 J.

c) *Cold bend*—The cold-bend test described in 4.1.9 shall be conducted.

d) *Ground path integrity*—Ground path conductance shall be measured based on 4.1.13. After the chemical exposure, the continuous metallic sheath, metallic braid, or other equivalent electrically conductive material shall have a conductivity equal to or greater than the manufacturer's declared value.

4.3.2 Class II and III, Division 1

Heating devices for these hazardous (classified) locations shall meet additional impact and static mechanical load tests. The requirements for system components are covered in other standards for equipment for use in Class II and III, Division 1 hazardous (classified) locations. The following tests are intended to qualify heating devices and components for use in these hazardous (classified) areas and are required in addition to the type tests described in 4.1.

4.3.2.1 Verification of sheath temperatures

The sheath temperature test described in 4.2 shall be conducted at design conditions defined in Table 2, and the resultant sheath temperature shall not exceed the declared temperature class or maximum surface temperature. The maximum temperature for organic dusts is 165 °C.

4.3.2.2 Mechanical type tests

The deformation test as described in 4.1.7 shall be conducted at 204 kg (2000 N). The impact test as described in 4.1.8 shall be conducted retaining the same impact area, however, with an increased impact energy of 27.1 J.

4.3.3 Class I, Division 2 locations

Tests as defined in 4.1 shall be used. The requirements for system components are covered in other standards for equipment for use in Class I, Division 2 hazardous (classified) locations. Sheath temperature tests shall be as defined in 4.2, with operational conditions as described in Table 2.

Copyright © 2004 IEEE. All rights reserved.

Copyright The Institute of Electrical and Electronics Engineers, Inc.
Provided by IHS under license with IEEE
No reproduction or networking permitted without license from IHS Not for Resale

4.3.4 Class II and III, Division 2 locations

Tests as defined in 4.1 shall be used. The requirements for system components are covered in other standards for equipment for use in Class II and III, Division 2 hazardous (classified) locations. Sheath temperature tests shall be as defined in 4.2, with operational conditions as described in Table 2.

4.3.5 Class I, Zone 1 locations

Heating devices required for these areas shall be tested for severe chemical exposure, impact, and static mechanical loads. Additional type testing is also required for system components. The requirements for system components are covered in other standards for equipment for use in Class I, Zone 1, hazardous (classified) locations. The following tests are intended to qualify heating devices for application in these hazardous (classified) areas and are required in addition to all the type tests described in 4.1.

4.3.5.1 Verification of sheath temperatures

The sheath temperature test described in 4.2 shall be conducted per design conditions detailed in Table 2, and the resultant sheath temperature shall not exceed the declared temperature class or maximum surface temperature.

4.3.5.2 Mechanical type tests

The deformation test as described in 4.1.7 shall be conducted at 204 kg (2000 N). The impact test as described in 4.1.8 shall be conducted retaining the same impact area, however, with an increased impact energy of 27.1 J.

4.3.5.3 Chemical exposure tests

Chemical exposure tests shall be conducted on the heating device and any integral components per 4.3.1.3.

4.3.6 Class I, Zone 2 locations

Tests as defined in 4.1 shall be used. The requirements for system components are covered in other applicable national and international standards for equipment for use in Class I, Zone 2, hazardous (classified) locations. Sheath temperature tests shall be as defined in 4.2, with operational conditions as described in Table 2.

4.4 Routine tests

These tests shall be carried out by the manufacturer during or after production to verify conformance to the manufacturer's specifications.

4.4.1 Output rating

The output rating for each surface heating device or manufactured length of heating cable shall be verified for uniform/linear power output through dynamic measurement, statistical, or other sampling test methods. If statistical or sampling methods are used, the results shall represent a total product confidence of 0.95 or greater. The test measurement criteria shall be established to correlate with the output rating test of 4.1.11. The power output shall be within the manufacturer's published output range for each product.

 Copyright © 2004 IEEE. All rights reserved.

Copyright The Institute of Electrical and Electronics Engineers, Inc.
Provided by IHS under license with IEEE
No reproduction or networking permitted without license from IHS Not for Resale

4.4.2 Dielectric test

The primary electrical insulation jacket of the heating device shall withstand a dry-spark test[6] at a minimum of 6000 Vac. As an alternative to the dry-spark test, the dielectric tests in 4.1.1 may be conducted.

After the installation of a metallic covering, metallic braid, or other equivalent electrically conductive material, ground plane, or continuous metal sheath, the heating device shall have the dielectric test described in 4.1.1 conducted.

Nonmetallic overjackets shall withstand an additional dry-spark test with a minimum test voltage of 3000 Vac. As an alternative to the dry-spark test, the dielectric tests in 4.1.1 may be conducted.

5. Marking and installation instructions

5.1 Product markings for heating devices

Heating devices intended for field fabrication shall be clearly and permanently surface-marked with the following information. Tubing bundles shall be marked on the bundle jacket. For heating devices with factory fabricated terminations or surfaces where legible printing cannot be applied, this information shall be on a durable tag/label permanently affixed to the non-heating sheath within 75 mm of the power connection fitting or gland.

a) The name of the manufacturer, trademark, or other recognized symbol of identification.
b) The catalog number, reference number, or model.
c) The month and year of manufacture, date coding, applicable serial number, or equivalent.
d) The rated voltage for parallel heating devices or maximum operating voltage for series heating devices.
e) The rated power output in watts per unit length at the rated voltage (and at a stated temperature for devices that change output with temperature) or ohms per unit length for series cable, or the operating current or total wattage, as applicable.
f) Agency listing or approval.
g) If applicable, hazardous (classified) locations markings, including temperature class or maximum surface temperature (when applicable).
h) Division 1 heating devices shall be marked for that application only. (Although Division 1 heating devices may be used in other locations, they shall not be marked as suitable for any location other than Division 1. All other Division 1 requirements of this standard shall apply.)

5.2 Markings for field-assembled components

Field-assembled components shall be marked with the following information. In the case of components with small surface areas or surfaces where legible printing cannot be applied, the markings may be placed on the smallest unit container in lieu of the component itself.

a) The name of the manufacturer, trademark, or other recognized symbol of identification
b) The catalog number, reference number, or model
c) The month and year of manufacture, date coding, applicable serial number, or equivalent
d) Agency listing or approval

[6]The dry-spark test shall have a substantially sinusoidal waveform at 2500–3500 Hz. For a 3000 Hz supply, the speed of the wire in m per s shall not be more than 33 times the length of the electrode in cm; this requirement is proportional to frequency.

Copyright © 2004 IEEE. All rights reserved.

Copyright The Institute of Electrical and Electronics Engineers, Inc.
Provided by IHS under license with IEEE
No reproduction or networking permitted without license from IHS Not for Resale

e) Applicable environmental or area use requirements, such as NEMA 4, Type 4, IP ratings, and hazardous (classified) locations markings including temperature class or maximum surface temperature (when applicable)

5.3 Installation Instructions

The manufacturer shall provide product specific installation instructions for heating devices and components. Instructions for components and heaters may be combined where termination/installation instructions are identical. When different instructions are required, they shall be provided on separate documents and be clearly identified as to the products and locations that apply.

These shall include the following information:

a) The intended use(s)

b) The statement “Suitable for use with” (or equivalent) and a listing of applicable heating devices, or a listing of applicable connection fittings

c) The statement “Bond the metallic braid, sheath, or equivalent electrically conductive material of the heating device to a suitable earth terminal”

6. Design

Each process will impose a unique set of constraints to achieve proper temperature control. Significant elements may include maintenance and operating flexibility, energy efficiency, acceptable temperature span, time, and manpower available to correct deficiencies, and the cost assignable to lost production.

6.1 Process considerations

For convenience, three basic process types, along with probable tracing constraints, are covered in the following subclauses. It should be recognized, however, that each specific application may involve a combination of elements.

6.1.1 Type I

Type I is a process where the temperature should be maintained above a minimum point. An ambient sensing thermostat is acceptable. Equipment might consist of a mechanical thermostat and few, if any, alarms. Large blocks of power might be controlled by means of a single thermostat, a contactor, and a panel board. Since heat input will be provided unnecessarily at times, wide temperature excursions should be tolerable, and maximum energy efficiency is not warranted. Energy efficiency can be improved through the use of a dead-leg sensing control (see 6.8.2).

6.1.2 Type II

Type II is process where the temperature should be controlled within a moderate band. Pipeline temperature sensing devices, along with some facilities for monitoring and alarming, are typical. Redundant equipment is not generally specified, and the tracing requirement would be sufficiently seasonal to permit annual maintenance and repairs.

6.1.3 Type III

Type III is process where the temperature should be controlled within a narrow band. Pipe sensing controllers using thermocouple or resistance temperature detector (RTD) inputs will facilitate field calibration and provide maximum flexibility in the selection of alarm and monitoring functions. Redundant

 Copyright © 2004 IEEE. All rights reserved.

Copyright The Institute of Electrical and Electronics Engineers, Inc.
Provided by IHS under license with IEEE
No reproduction or networking permitted without license from IHS Not for Resale

equipment may be warranted where maintenance and repairs need to be performed without a process shutdown. Heat input capability may be provided to melt or raise the fluid temperature, or both, within a specified range and time interval. Type III considerations require strict adherence to flow patterns and maintaining the thermal insulation systems with a high degree of integrity.

6.2 Environmental/site considerations

6.2.1 Hazardous (classified) locations

Where equipment is installed in a hazardous (classified) location, the class, division or zone, group, and minimum gas or dust ignition temperature should be specified. As an alternative to ignition temperature, the appropriate identification number listed in the NEC, Table 500.8(B) for Divisions or Table 505.9(D)(1) for Zones, may be specified.

6.2.2 Corrosive areas

All components of electric heat-tracing systems should be examined to verify compatibility with corrosive elements that may be encountered. Heat-tracing systems operating in corrosive areas have a higher potential for failure than in noncorrosive areas. Deterioration of the thermal insulation system is greatly enhanced by corrosion of the weather barrier and the possibility of pipeline leaks soaking the thermal insulation. Particular attention should be given to the materials of piping systems as well as the electric heat-tracing systems as related to the effective ground-fault return path. Metallic shields, metallic braid, or other equivalent electrically conductive material on heating devices shall either be resistant to the corrosive materials or have a suitable nonmetallic overjacket over the metal shield. Nonmetallic piping and hybrid piping systems may also be present, which further complicate the grounding problem. Ground-fault return paths that are established at the time of installation may also become degraded due to the corrosion during the operation of the plant. Further grounding considerations are covered in 6.7.4.

6.3 Thermal insulation and heat-loss considerations

The primary function of thermal insulation is to reduce the rate of heat transfer from a surface that is operating at a temperature other than ambient. This reduction of energy loss can

a) Reduce operating expenses.
b) Improve system performance.
c) Increase system output capability.

Prior to any heat-loss analysis for an electrically traced pipeline, vessel, or mechanical equipment, a review of the selection of the insulation system is recommended. The principal areas for consideration are as follows:

1) Selection of an insulation material
2) Selection of a weather barrier
3) Selection of the economic insulation thickness
4) Selection of the proper insulation size

6.3.1 Selection of an insulation material

The following are important aspects to be considered when selecting an insulation material:

a) Thermal characteristics
b) Mechanical properties
c) Chemical compatibility

Copyright © 2004 IEEE. All rights reserved.

Copyright The Institute of Electrical and Electronics Engineers, Inc.
Provided by IHS under license with IEEE
No reproduction or networking permitted without license from IHS Not for Resale

d) Moisture resistance

e) Personnel safety characteristics

f) Fire resistance

g) Smoke and toxicity

h) Cost

Insulation materials commonly available include the following:

1) Expanded silica

2) Mineral fiber

3) Cellular glass

4) Urethane

5) Fiber glass

6) Calcium silicate

7) Polyisocyanurate

8) Perlite (expanded silicate)

6.3.2 Selection of a weather barrier

Proper operation of an electrically traced system depends upon the insulation being dry. Electric tracing normally has insufficient heat output to dry wet insulation. Some insulation materials, even though removed from the piping and force-dried, never regain their initial integrity after once being wet.

Insulated piping should be weather-protected with metal jacketing, polymeric, or a mastic system. When metal jacketing is used, it should be with formed, modified "S" longitudinal joints. The circumferential end joints should be sealed with closure bands and supplied with sealant on the outer edge or where they overlap (see Figure 7).

Jacketing that is overlapped or otherwise closed without sealant is not effective as a barrier to moisture. A single unsealed joint can allow a considerable amount of water to leak into the insulation during a rainstorm.

The type of weather barrier used should, as a minimum, be based on a consideration of the following:

a) Effectiveness in excluding moisture

b) Corrosive nature of chemicals in the area

c) Fire-protection requirements

d) Durability to mechanical abuse

e) Cost

6.3.3 Selection of the economic insulation thickness

At a minimum, an economic consideration of the insulation will weigh the initial costs of materials and installation against the energy saved over the life of the insulation. Methods for analyzing the most economic thicknesses are outlined by the Federal Energy Administration [B10]. Careful selection of type and thickness of thermal insulation can reduce the heating devices required and power consumed by the heating system.

Copyright © 2004 IEEE. All rights reserved.

Copyright The Institute of Electrical and Electronics Engineers, Inc.
Provided by IHS under license with IEEE
No reproduction or networking permitted without license from IHS Not for Resale

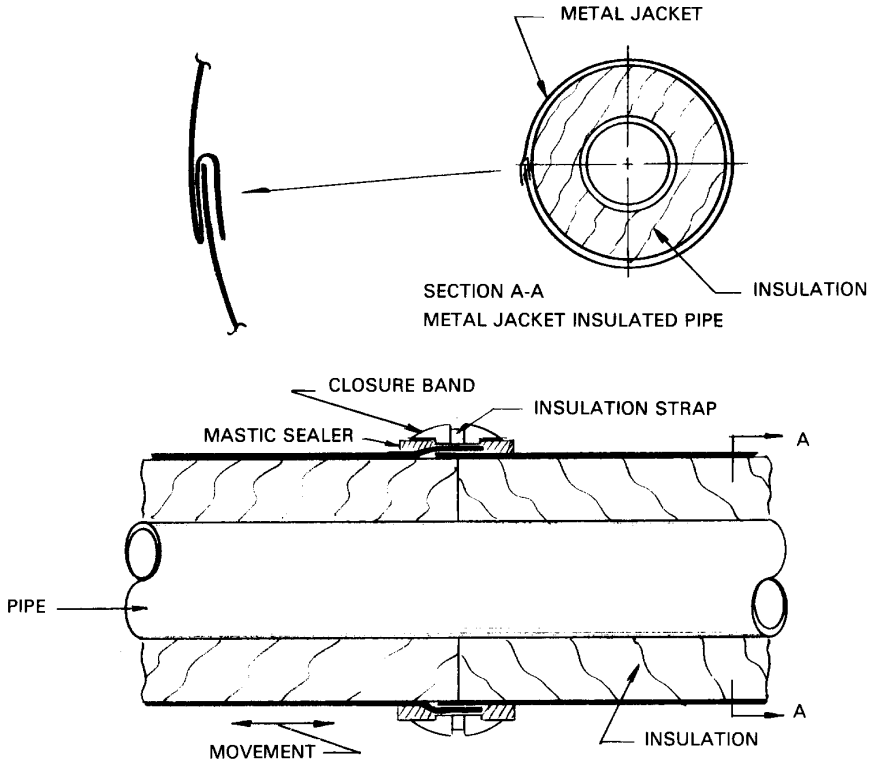

Figure 7—Thermal insulation weather-barrier installation

6.3.4 Selection of the proper insulation size

Preformed insulations generally follow ASTM C 585-1990 [B5]. Dimensions for prefabricated fittings are listed in ASTM C 450-2002 [B4]. When reviewing these standards, it should be noted that the actual insulation thicknesses do not always correspond exactly to the nominal insulation thickness. When choosing the insulation size, consideration should be made as to whether or not the actual pipe size insulation is suitable for accommodating both pipe and tracer.

For soft insulations (mineral fiber, fiber glass, etc.), actual pipe size insulation may be used in many cases by banding the insulation tightly. Care should be taken to prevent the heating cable from being buried within the insulation, which may cause damage to the heating cable or may restrict heat transfer. As an alternate, the next larger pipe size insulation that can easily enclose pipe and electric tracer is also acceptable.

Rigid insulation (calcium silicate, expanded silica, cellular glass, etc.) may be pipe size insulation if board sections cut to fit the longitudinal joint are used. This type of installation technique is commonly referred to as an extended leg installation. Alternately, use of the next larger insulation size may be selected to accommodate the tracer. In all cases, the insulation size and thickness should be clearly specified.

6.3.5 Heat-Loss calculations

To determine actual heat losses for a given set of conditions, a complete insulation specification, including the thermal conductivity of the insulation at several mean temperatures, the type of weather barrier specified, insulation size and thickness, desired pipe maintenance temperature, and the minimum ambient temperature and wind conditions, is required.

Given these parameters, the heat loss for pipes and tubes may be evaluated by using Equation (1):

Copyright © 2004 IEEE. All rights reserved.

Copyright The Institute of Electrical and Electronics Engineers, Inc.
Provided by IHS under license with IEEE
No reproduction or networking permitted without license from IHS
Not for Resale

$$q = \frac{(T_p - T_a)}{\frac{1}{\pi D_1 h_i} + \frac{\ln(D_2/D_1)}{2\pi K_1} + \frac{\ln(D_3/D_2)}{2\pi K_2} + \frac{1}{\pi D_3 h_{co}} + \frac{1}{\pi D_3 h_o}} \quad (1)$$

Equation (1) is examined in detail, with an example, in Annex B. Vessel heat losses are more complex due to the heat sinks that penetrate the insulation surface. They often require a more complex analysis to determine total heat loss, and the supplier should be consulted. See Annex C for typical formulas.

For ease of product selection, most manufacturers furnish simple charts and graphs of heat losses for variously maintained temperatures and insulations, which usually include a safety factor.

6.3.6 Safety factor considerations

As heat-loss calculations result in theoretical values and do not account for imperfections associated with actual field installations, a safety factor should be applied to the calculated value. Safety factors should be considered for the following:

a) Thermal insulation degradation

b) Supply voltage variations

c) Branch wiring voltage drop

d) Heating device voltage drop (if applicable)

e) Increased radiation and convection on higher temperature applications

f) Quality of installation of thermal insulation

Each application should be evaluated for these criteria and a safety factor established. A typical value is 25%.

6.3.7 Special considerations of heat loss

In certain plant operations, it may be necessary to specify that the heat-tracing system is capable of raising the temperature of a static product to pumping temperature within a certain time period. The heat-delivery requirement may be evaluated by use of Equation (2):

$$t = H \ln\left\{\frac{q_c - U(T_i - T_a)}{q_c - U(T_f - T_a)}\right\} + \frac{\rho_1 V_{c1} h_f}{q_c - U(T_{sc} - T_a)} \quad (2)$$

Equation (2) is examined in detail in Annex D. Insulation for valves, flanges, pumps, instruments, and other irregularly shaped equipment may be constructed for the particular configuration. This can be fabricated from block, insulation segments, or flexible removable covers.

Uninsulated or partially insulated pipe supports or equipment require additional heat input to compensate for the higher heat loss. Insulating cements or fibrous materials should be used to fill cracks and joints. Where insulating cements are used to totally insulate an irregular surface, a proportionally thicker layer of cement may be applied to achieve the desired insulating capability. An example of this point is illustrated in Annex E.

Copyright © 2004 IEEE. All rights reserved.

Copyright The Institute of Electrical and Electronics Engineers, Inc.
Provided by IHS under license with IEEE
No reproduction or networking permitted without license from IHS Not for Resale

6.4 Maximum temperature determination

6.4.1 Maximum pipe temperature

For an uncontrolled system the maximum runaway pipe temperature is calculated at maximum ambient temperature with the heating device continuously energized. The formula for calculating the maximum temperature for pipes and tubes is a rearrangement of the terms of the heat-loss formula in Equation (1) as shown in Equation (3):

$$T_{pr} = \frac{W}{\pi}\left[\frac{1}{D_1 h_i} + \frac{\ln(D_2/D_1)}{2K_1} + \frac{\ln(D_3/D_2)}{2K_2} + \frac{1}{D_3 h_{co}} + \frac{1}{D_3 h_o}\right] + T_a \quad (3)$$

where

T_{pr} is the maximum runaway pipe, or tube, temperature (°C),

W is the maximum heating device output at operating voltage and maximum pipe or tube, temperature (W/m),

T_a is the maximum ambient temperature (°C).

The heating device output (W) shall be the highest declared power output of the manufacturer's tolerances. Other terms are defined in Annex B. Iterative techniques may need to be applied to the above calculation to arrive at T_{pr} since the thermal conductivity of the insulation and the heating device output may be a function of pipe or tube temperature.

6.4.2 Sheath temperature—metallic applications

For metallic pipe or tube applications, the sheath temperature of a heating device should be considered to the extent that product ratings are not to be exceeded in the application. This includes not only the electrical insulation and sheath materials, but also the maximum temperature limitations of the thermal insulation and pipe or tube wall material or process material. The maximum sheath temperature of a heating device may be determined by using the systems or product classification approach as described in 4.2. The sheath temperature of a heating device is calculated as shown in Equation (4):

$$T_{sh} = \frac{W}{UC} + T_p \quad (4)$$

where

T_{sh} are the heating device surface temperatures (°C),

C is the heating cable circumference (m) or the surface area (m^2) for surface heating units,

U is the overall heat-transfer coefficient ($W/m^2 \cdot °C$),

T_p is the process maintenance temperature (°C).

The overall heat-transfer coefficient is different for each heating device type, installation method, and system configuration. It is a combination of conductive, convective, and radiation heat-transfer modes. The value of U can vary from 12 for a cylindrical heating cable in air (primary convective), to 170 or more for a heating cable applied using heat-transfer aids (primarily conductive). Upon request, the manufacturer should provide the U factor for given applications or furnish calculated or experimentally determined sheath temperatures. For the case of an ambient control system, the sheath temperature is calculated by Equation (4), except T_p is replaced by T_{pr} where T_a in Equation (3) is the ambient sensing controller set point.

Copyright © 2004 IEEE. All rights reserved.

Copyright The Institute of Electrical and Electronics Engineers, Inc.
Provided by IHS under license with IEEE
No reproduction or networking permitted without license from IHS Not for Resale

6.4.3 Sheath temperature—nonmetallic applications

For nonmetallic applications, the pipe, vessel, or tube wall thermal resistance should also be considered, as the nonmetallic material is a poor heat-transfer medium. These materials may have a thermal conductivity (*k*-factor) 1/200 that of steel, and a substantial temperature difference may develop across the wall depending on the heating device watt density. This higher than normal temperature (when compared to tracing metallic pipes and vessels) may have adverse effects, as follows:

a) The nonmetallic material's maximum allowable temperature may be exceeded.

b) The heating device's maximum allowable temperature may be exceeded.

c) The heating device's wattage output may be reduced.

Sheath temperature of the heating device under normal operating conditions is in principle obtained from Equation (4). However, in obtaining *U*, the effect of the thermal resistance of the wall should be included. The overall heat-transfer coefficient for the nonmetallic wall is shown in Equation (5):

$$\frac{1}{U_p} = \frac{1}{U_m} + \frac{L}{k_p} \tag{5}$$

where

U_p is the overall heat-transfer coefficient for nonmetallic pipe (W/m^2·°C),

U_m is the overall heat-transfer coefficient for metallic pipe (W/m^2·°C),

L is the pipe or tube wall thickness (m),

k_p is the thermal conductivity of wall material (W/m·°C).

Because of the additional thermal resistance of the nonmetallic pipe or tube wall, a temperature difference will exist across the wall; that is, the outside wall and fluid temperature are not the same as in the case of a metallic wall. Therefore, fluid temperature should be considered.

For a nonmetallic wall, then

$$T_{sh} = \frac{W}{U_p C} + T_f \tag{6}$$

where

T_f is the fluid temperature (°C).

Equation (6) is a conservative simplification of a complex problem that involves criteria beyond the scope of this standard. The individual manufacturers should provide sheath temperature data for specific applications.

6.4.4 Hazardous (classified) locations

The same approach as in Equation (4) and Equation (6) is used in determining sheath temperatures under abnormal conditions (control failure or overvoltage, or both) for hazardous (classified) areas. The sheath temperature determination for hazardous (classified) areas is shown in Equation (7).

$$T_{sh} = \frac{W_m}{UC} + T_{pr} \tag{7}$$

where

W_m is the highest declared power output of the manufacturer's tolerances at the maximum pipe or tube temperature, further adjusted for overvoltage conditions as defined in 6.5,

 Copyright © 2004 IEEE. All rights reserved.

Copyright The Institute of Electrical and Electronics Engineers, Inc.
Provided by IHS under license with IEEE
No reproduction or networking permitted without license from IHS Not for Resale

T_{pr} is the maximum runaway pipe or tube temperature (°C) calculated from Equation (3), using W_m.

The heating device output, W_m, is the resulting thermal output (W/m) when the heater is energized per Table 2.

If the process temperature can be greater than T_{pr} in Equation (3), then, as shown in Equation (8):

$$T_{sh} = \frac{W_m}{UC} + T_{pm} \tag{8}$$

where

T_{pm} is the maximum process temperature (°C).

Note that for Division 1 and Zone 1 applications, sheath temperatures shall be calculated using minimum heat-transfer coefficient, U, without heat-transfer aids.

The resultant sheath temperature, T_{sh}, shall be less than the ignition temperature (°C) of the specific gas or vapor involved. Ignition temperatures may be found in NFPA 325-1994 and NFPA 497M-1991.

6.4.5 Temperature markings

The maximum sheath (surface) temperature or temperature class shall be used when it has been demonstrated that the maximum sheath temperatures under the design condition of no-wind and maximum design ambient are predictable using the proper U-factor and the formula in Equation (3), and verified by the system approach test in 4.2.1. A temperature class may also be determined by the product classification test outlined in 4.2.2. For tube bundles, the temperature class or maximum surface temperature of the heating cable shall be marked on the bundle jacket.

6.5 Stabilized and controlled designs

There are two methods that can be used to limit the sheath temperature and establish a temperature classification for heating devices:

a) *Stabilized design*—These are applications where the maximum surface temperature of the heating device is determined without thermostatic control (see Table 3). Two approaches are used:

   1) A product classification approach, in which the maximum self-generated sheath temperature of the heating device has been established by testing the device in an artificial environment simulating worst-case conditions in accordance with 4.2.2.

   2) A systems approach, in which the manufacturer has demonstrated the ability to predict sheath temperatures by conducting tests in accordance with 4.2.1. Use 40 °C maximum ambient, unless a higher ambient is specified.

b) *Controlled design*—This approach requires the use of a temperature control device to limit the maximum pipe temperature (see Table 4). When using a temperature controller without failure annunciation, a separate high-temperature limit controller to de-energize the heating device shall be included in the design with either a manual reset or annunciation. Alternately, a single temperature controller with failure annunciation can be used.

When heaters (especially on pipes with different flow conditions) are grouped together under a single surface temperature control device, each circuit segment shall be analyzed as a stabilized pipe design.

Copyright © 2004 IEEE. All rights reserved.

Copyright The Institute of Electrical and Electronics Engineers, Inc.
Provided by IHS under license with IEEE
No reproduction or networking permitted without license from IHS Not for Resale

Table 3—Stabilized design—without temperature control device

Item	Class I, II, III		Class I			Unclassified (ordinary)
	Div. 1	Div. 2	Zone 0	Zone 1	Zone 2	
Percent of rated voltage	120	110	Note 2	110	110	100
Maximum pipe temperature for calculation	Note 1	Note 1	Note 2	Note 1	Note 1	Note 1
Percent of ignition temperature	<100	<100	Note 2	<100	<100	
Maximum wind speed for calculation	0	0	Note 3	0	0	0

NOTES
1—The pipe temperature (T_{pr} or T_{pm}, whichever is greater) used to calculate the maximum sheath temperature.
2—Electric heating devices are not permitted in Zone 0 areas.

Table 4—Control limited design—with temperature control device

Item	Class I, II, III		Class I			Unclassified (ordinary)
	Div. 1	Div. 2	Zone 0	Zone 1	Zone 2	
Percent of rated voltage	120	110	Note 3	110	110	100
Maximum pipe temperature for calculation	Note 1	Note 2	Note 3	Note 1	Note 2	Note 2
Percent of ignition temperature	<100	<100	Note 3	<100	<100	
Maximum wind speed for calculation	0	0	Note 3	0	0	0

NOTES
1—The pipe temperature (T_{pr} or T_{pm}, whichever is greater) used to calculate the maximum sheath temperature.
2—Use the set point of the applicable limit or temperature controller.
3—Electric heating devices are not permitted in Zone 0 areas.

6.6 Design information

6.6.1 Design information drawings and documents

To ensure a workable heat-tracing design, the design function should be furnished with up-to-date piping information and should be notified of any revisions of items and drawings that pertain to the heat-tracing system.

The following information, as applicable for the specific installation, is necessary in the design of the heat-tracing system:

a) Thermal design parameters (see the basic design data checklist, Annex G)

b) System flow diagram

Copyright © 2004 IEEE. All rights reserved.

Copyright The Institute of Electrical and Electronics Engineers, Inc.
Provided by IHS under license with IEEE
No reproduction or networking permitted without license from IHS Not for Resale

c) Equipment layout drawings (plans, sections, etc.)
d) Pipe drawings (plans, isometrics, line lists, etc.)
e) Piping specifications
f) Thermal insulation specifications
g) Equipment detail drawings (pumps, valves, strainers, etc.)
h) Electrical drawings (one lines, elementaries, etc.)
i) Bill of materials
j) Electrical equipment specifications
k) Equipment installation and instruction manuals
l) Equipment details
m) Thermal insulation schedules
n) Area classification drawings
o) Ignition temperature of gas or vapor involved
p) Process procedures that would cause elevated pipe temperatures, that is, steam out or exothermic reactions

6.6.2 Isometric or heater configuration line lists and load charts

Each heater circuit should be shown on a drawing depicting its physical location, configuration, and relevant data for the heating device and its piping system. The drawing and/or design data should include the following information:

a) Piping system designation
b) Pipe size and material
c) Piping location or line number
d) Heating device designation or circuit number
e) Location of power connection, end seal, and temperature sensors, as applicable
f) Heating device number
g) Heating device characteristics, such as the following:
    1) Temperature to be maintained
    2) Maximum process temperature
    3) Minimum ambient temperature
    4) Maximum exposure temperature (when applicable)
    5) Maximum sheath temperature (when required)
    6) Heat-up parameters (when required)
    7) Length of piping
    8) Trace ratio of heater cable per length of pipe
    9) Extra length of heater cable applied to valves, pipe supports, and other heat sinks
    10) Length of heating cable
    11) Operating voltage
    12) Watt per unit length of heating cable at desired maintenance temperature
    13) Heat loss at desired maintenance temperature per unit length of pipe
    14) Watts, total
    15) Circuit current, start-up and steady-state
h) Thermal insulation type, nominal size, thickness, and *k*-factor

Copyright © 2004 IEEE. All rights reserved.

Copyright The Institute of Electrical and Electronics Engineers, Inc.
Provided by IHS under license with IEEE
No reproduction or networking permitted without license from IHS Not for Resale

i) Area classification, including the lowest auto ignition temperature for each area (if applicable)

j) Bill of material

k) Heat-transfer aids

The drawing should also indicate the power distribution panel number or designation, the alarm and control equipment designation, and set points.

6.7 Power system

The power system for an electric heat-tracing system consists of the power source, distribution transformers, and the heat-tracer distribution system. See Figure 8 for a typical system diagram of an electrical tracing load. General design considerations and recommendations are discussed in this subclause.

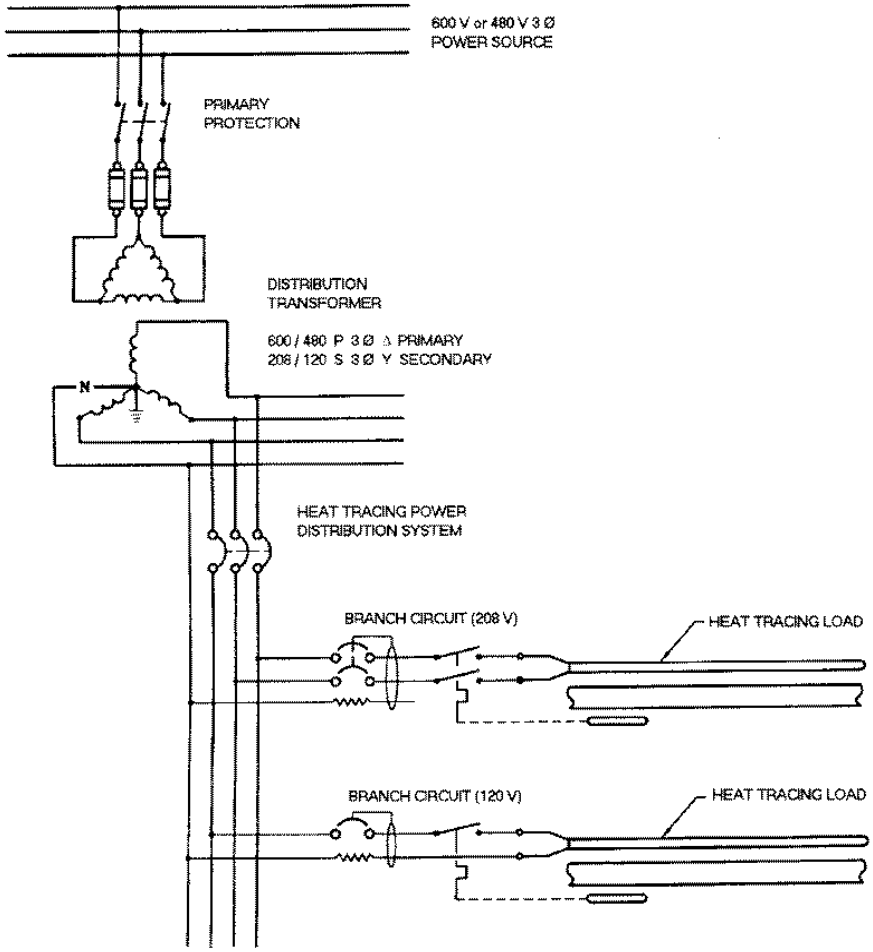

Figure 8—Typical power distribution system for electrical heat tracing

NOTE—Figure 8 shows a typical system. Many variations are possible.

6.7.1 Power source

Since the power source is a key factor in the overall design of an electric heat-tracing system, it is recommended that voltage levels and physical location be determined in the early stages of the design.

Copyright © 2004 IEEE. All rights reserved.

Copyright The Institute of Electrical and Electronics Engineers, Inc.
Provided by IHS under license with IEEE
No reproduction or networking permitted without license from IHS
Not for Resale

6.7.2 Distribution transformers

The kilovolt ampere ratings of the distribution transformers should be based on the total rated operating load plus expected spare capacity. A power system may require several distribution transformers, depending on the magnitude and physical distribution of the heat-tracing loads. The distribution transformer secondary should be a grounded system.

6.7.3 Power distribution system

The physical location of the distribution system should be considered in relation to the piping system when developing the distribution system. Whenever practical, locate the panels in unclassified and noncorrosive areas. The selection of the distribution panel enclosure is based on the environment and area classifications. All enclosures should have the specific system identification clearly marked on the outside, and the circuit directories should be easily accessible.

The branch circuit wiring of each heat-tracing circuit requires an over-current protective device. Selection of branch circuit protective device ratings should be based on heater start-up currents and their duration at the minimum temperature the heating device may experience until design operating conditions are reached.

The recommended number of devices or segments should not exceed five on a single protective device.

6.7.4 Grounding requirements

a) The outer metallic covering, metallic braid, or other equivalent electrically conductive material of the heating device shall be bonded to the grounding system to provide for an effective ground path. Refer to the NEC, Section 250.4 (A).

b) In applications where the primary ground path is dependent on the metallic covering, metallic braid, or other equivalent electrically conductive material, the chemical resistance of that covering should be considered if exposure to corrosive vapors or liquids might occur.

c) Typically, stainless steel type braids or sheaths have relatively high resistance and may not provide effective ground paths. In this case, the possible ground-fault currents should be examined as outlined in the NEC, Section 110.10.

6.7.5 Ground-fault protection of equipment

Each heating device branch circuit or each heating device shall have ground-fault equipment protection capable of interrupting high-impedance ground faults. This shall be accomplished by a ground-fault equipment protective device with a nominal 30 mA trip rating or a controller with ground-fault interruption capability for use in conjunction with suitable circuit protection. For higher leakage current circuits, the trip level for adjustable devices is typically set at 30 mA above any inherent capacitive leakage characteristic of the heater, as specified by the manufacturer. Where conditions of maintenance and supervision ensure that only qualified persons will service the installed systems and continued circuit operation is necessary for the safe operation of the equipment or processes, ground-fault detection without interruption is acceptable if alarmed in a manner to assure an acknowledged response.

NOTE—Existing ungrounded electrical distribution systems require special considerations.

6.8 Special considerations

6.8.1 Flow-pattern analysis

Where critical temperature control is required, all possible flow conditions in the piping network should be considered in determining the heat-tracing circuit segments. Consider the heated tank example shown in

Copyright © 2004 IEEE. All rights reserved.

Copyright The Institute of Electrical and Electronics Engineers, Inc.
Provided by IHS under license with IEEE
No reproduction or networking permitted without license from IHS
Not for Resale

Figure 9. All three heat-tracing circuits with separate controls are necessary to maintain the piping system at its desired maintenance temperature. When the heated product flows from the tank through pipe A, Circuit No. 1 and Circuit No. 2 are de-energized, and Circuit No. 3, which is heating the nonflowing pipe segment, remains energized. If all three circuits are combined into one, using only one control, the nonflowing line A or B is de-energized and drops below the desired maintenance temperature. A bypass around a control valve is another common occurrence where additional circuits are needed, as shown in Figure 10.

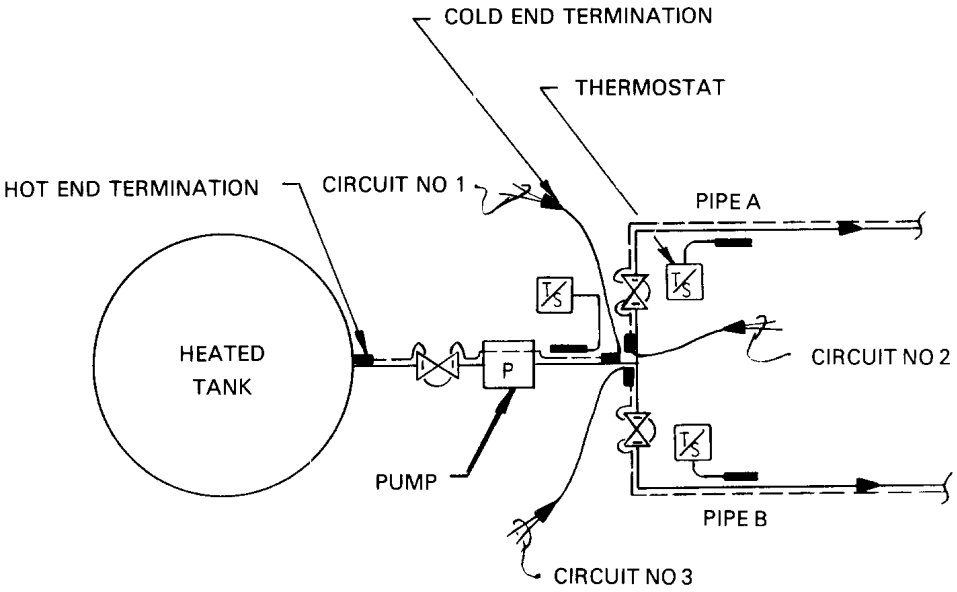

Figure 9—Tank example

NOTE—If Circuit No. 1 and Circuit No. 3 are not needed, the bypass piping should be heated when there is flow in the main pipe segment. Since the fluid in the bypass is static, if not separately controlled, it would cool to the ambient temperature. These are two examples of sections of piping systems that need close attention with respect to circuiting. Dead legs and manifold systems require careful arrangement of the heat tracers and associated controls.

The recommended number of devices or segments should not exceed five on a single protective device.

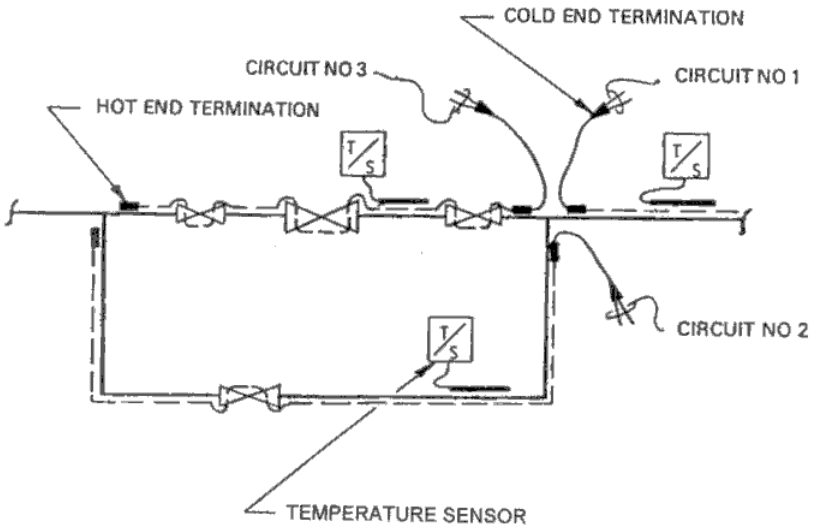

Figure 10—Bypass example

Copyright © 2004 IEEE. All rights reserved.

Copyright The Institute of Electrical and Electronics Engineers, Inc.
Provided by IHS under license with IEEE
No reproduction or networking permitted without license from IHS
Not for Resale

6.8.2 Dead leg control technique

This is a technique that is sometimes used for the temperature control of very complex piping networks and manifold systems. It can also be used where the total number of temperature control devices is to be kept at a minimum at the expense of some energy savings. The technique consists of locating or fabricating a section of pipe, such as a dead leg that has the following:

a) A static flow condition at all times.

b) The same heat loss as the other piping to be controlled. Then, regardless of flow conditions, all sections will be heated. All sections that have static flow conditions at the same time will have the proper amount of heat required as the ambient temperature varies. Pipe sections that have flow may be heated unnecessarily. The merits of this approach lie mainly in the trade-off in energy savings vs. savings on initial control costs. Caution should be exercised when using this technique with the temperature sensitive products. Care should be taken that, first, the dead leg section for control is long enough that its temperature is not affected by flow in the adjoining piping, and second, that the temperature sensor is located on the portion that is thermally independent of flow conditions.

6.8.3 Chimney effect

Long, vertical piping runs, where close temperature control is needed, may need two or more control circuits. Due to the convective circulation of the hot fluid, a substantial temperature difference from the bottom to the top of the vertical run may occur. The maximum control circuit length for a long, vertical run depends on the maintenance-temperature tolerance and the fluid characteristics inside the pipe. Where oversized or long-legged thermal insulation is used, there will also be a convective circulation between the pipe and insulation. This should be broken up by a cylinder of heat-transfer mastic over the pipe and heating cable, sealing the air space as necessary.

6.8.4 Double insulation

The double insulation technique can be employed when the pipe temperature exceeds the maximum allowable temperature of the heating cable. Prevention of the freezing of condensate in high-temperature steam lines when these lines are not in use is a typical application. It consists of locating the heating element between two layers of insulation surrounding the pipe. The essence of the double insulation technique is to determine the correct combination of inner and outer insulation type and thickness that will result in an acceptable interface temperature for the heating element. Note that maximum ambient temperature conditions should be considered in this determination. See Figure 11 for a typical temperature profile.

6.8.5 Heat-Up

In most applications, heat tracing is used for temperature maintenance and not for heat-up. However, it is often of interest, at initial start-up or after a power shutdown, to see how long it will take for the system to reach its maintained temperature. This depends mainly on how much extra heat capacity is available. For critical applications where heat-up time is an important factor during start-up or after a power shutdown, extra heating capacity of the heat tracing in addition to that required for temperature maintenance becomes an important factor. (See Annex D and the basic design data checklist, Annex G.)

6.8.6 Spiraling of heat tracer

When the heat loss of the pipe exceeds the thermal output of the heating cable, spiraling the cable around the pipe is a possible solution. For example, if the heat loss from a pipe is 16.4 W/m and the heating cable output power at the voltage applied is 13.1 W/m, then the heating cable is spiraled on the pipe so that 380 mm of heater is on 300 mm of pipe. When performing such an installation, a pitch number is usually used. Pitch is the distance down the pipe where the spiral repeats itself. Most vendors of heat tracing have tables providing

Copyright © 2004 IEEE. All rights reserved.

--`,,`,,-`-`,,`,,`,`,,`---
Copyright The Institute of Electrical and Electronics Engineers, Inc.
Provided by IHS under license with IEEE
No reproduction or networking permitted without license from IHS Not for Resale

pitch and spiral factor data. When the spiral factor (meter of tracer per meter of pipe) exceeds 1.5, it is recommended that two straight runs be employed.

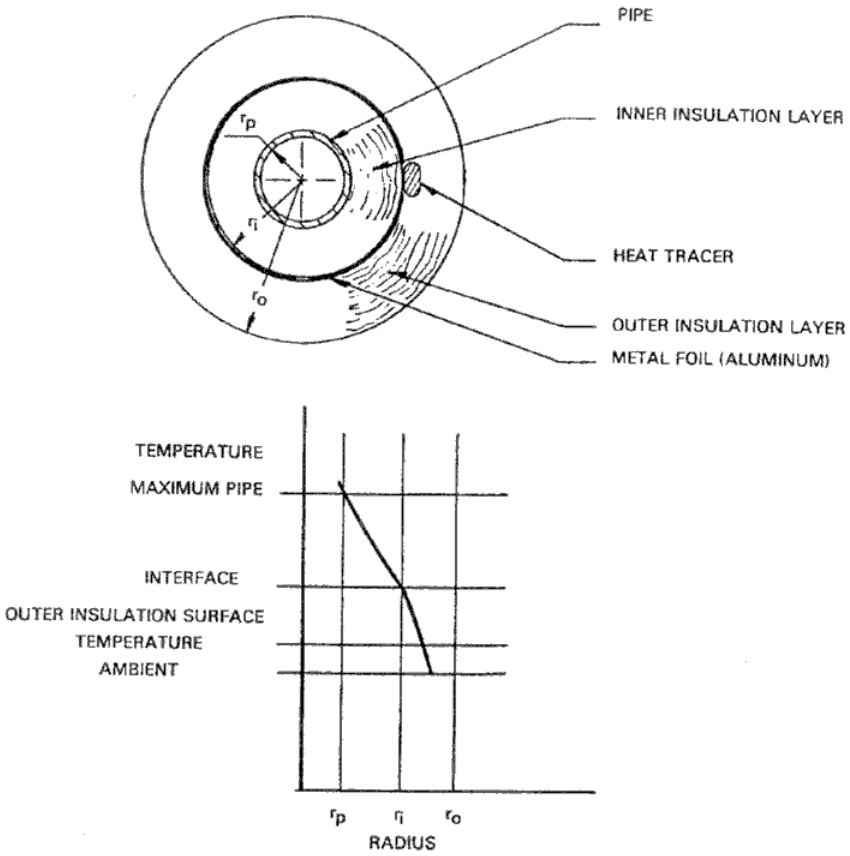

Figure 11—Typical double-insulation application

6.8.7 Voltage drop

When an electrical heating cable of the parallel type is used on long runs, the wattage per foot at the end of the run can be less than the wattage per foot at the beginning, due to voltage drop. This should be taken into consideration when determining cable output, location of temperature sensors, and safety factors.

6.8.8 Auxiliary loads

An auxiliary resistive load, such as an instrument heater or pilot light, may be connected to the terminal end of a parallel heater cable. The design of such installations must recognize the increased electrical load on the heater cable's bus wires and the temperature of the connection, and provide appropriate fittings and junction boxes to maintain the electrical area classification integrity of all equipment involved. The additional resistive load may be modeled as an equivalent length of heater cable for purposes of breaker sizing.

6.9 Control and monitoring considerations

A control system generally monitors only a single point on the piping system; therefore, the overall performance is highly dependent on the integrity of the thermal insulation system, heat-tracing design, and installation. A wide range of control and monitoring schemes exist for pipe-tracing systems, from a simple manual switch without alarm to advanced microprocessor-based control systems that provide a variety of programmable control, monitoring, alarm, power, and communication options. When selecting a control and

 Copyright © 2004 IEEE. All rights reserved.

Copyright The Institute of Electrical and Electronics Engineers, Inc.
Provided by IHS under license with IEEE
No reproduction or networking permitted without license from IHS Not for Resale

monitoring system, attention should be given to the overall end result, maintenance, control, flexibility, degree of control, and risk associated with not monitoring to properly specify the minimum control system.

6.9.1 Mechanical controllers

The mechanical controller, such as a thermostat, utilizes a bimetallic element, or the expansion of a fluid within a local bulb or bulb and capillary, to actuate electrical contacts through a bellows or a similar coupling device. The bulb and capillary should be of materials suitable for the atmosphere in which they are to be used. Flexible armor that offers mechanical protection for the capillary is recommended. Mechanical controllers are rugged; however, the limitation on capillary length keeps them from being grouped or panel mounted, and field calibration is cumbersome.

6.9.2 Electronic controllers

Electronic controllers, using RTD, thermistors, T/C, or other temperature sensing means, are capable of being located several hundred m away from the heated pipes and are often panel mounted and located for easy operator and maintenance access. These controllers take a sensor signal through an electronic process to switch an electromechanical relay or solid-state device for on-off or proportional control. Field calibration is similar to standard process instruments.

Electronic controllers are available in a wide range of costs and with a variety of features. A low-end unit can be pipe sensing or ambient sensing temperature with on-off control. Alarms/monitoring are usually optional. Mid-range controllers may also allow more than one temperature sensor per point, self-monitor for failed sensor, and incorporate ground-fault protection, while also including auto cycling of the heating circuit for year-round monitoring. User programmed setup allows selection of operating and alarm/ monitoring features and includes alphanumeric displays of circuit parameters. An integrated system may incorporate many individual controllers into a distributed system. Advanced control, monitoring, and alarm features provide for local or remote programming and status monitoring of each circuit.

6.9.3 Applications

Typical ambient sensing freeze-protection systems may require a simple ambient air sensing control system; however, from an energy conservation standpoint, pipe temperature sensing should be considered, especially on pipe sizes greater than 150 mm. Most process temperature applications, as a minimum, require pipe temperature sensing devices. Alarm functions, such as high- or low-process temperature and heat-tracing circuit failure, may be required. When these functions are required, electronic controls will usually provide them more economically than mechanical and supplementary devices, since ground-fault protection can be incorporated in electronic controls. Type III process applications that require an electronic type of controller may be grouped in a common cabinet to serve a portion of the heat-tracing system. Such systems may have high- and low-temperature, continuity, ground-fault, and system diagnostic alarms. Some applications, especially in hazardous (classified) environments, require special controller enclosures and may require a high-limit process temperature switch. When using solid-state control devices, high-limit signals may alarm or operate the circuit protective device. Consideration should be given to grouping the controllers outside the classified area, if possible.

Safety shower and eyewash systems require more concise temperature control to maintain a narrow range of water temperatures, unlike most pipe heating systems. A maximum allowable water temperature of 35 °C is established by ANSI Z358.1-2004 [B1] for both tempered water systems and freeze protected safety showers and their supply piping. Application of controls and monitoring for safety showers is guided by the temperature requirements outlined in ANSI Z358.1-2004 [B1]. Controls for safety shower and emergency eyewash equipment heating devices shall include a Type III temperature controller as described in 6.1.3. In addition, a high-temperature limiting controller with associated alarm shall be provided.

Copyright © 2004 IEEE. All rights reserved.

Copyright The Institute of Electrical and Electronics Engineers, Inc.
Provided by IHS under license with IEEE
No reproduction or networking permitted without license from IHS Not for Resale

6.9.4 Location of controllers

Where possible, temperature controllers should be located outside congested or inaccessible areas to make them more convenient for calibration and maintenance.

6.9.5 Location of sensors

Proper location of the temperature sensor on the pipeline, vessel, or mechanical equipment will ensure accurate temperature control. The sensor should be positioned at a point that is representative of the maintain temperature. The following conditions should be considered in relation to the location of the temperature sensor:

a) Where two or more electric heating cables meet or join, the sensors should be mounted 1–1.5 m from the junction.

b) If an electric heat-tracing circuit includes both piping and in-line heat sinks or heat sources, the sensor should be located on a section of pipe in the system approximately 1–1.5 m from the in-line heat sinks or heat sources.

c) The temperature sensor should be located to avoid direct temperature effects of the heating device.

d) The temperature sensitivity of plastic and fiberglass reinforced plastic (FRP) materials may warrant both a control and high-limit temperature device. The control sensor should be located at least 90° around the circumference from the heating device. The high-limit sensor should be located immediately adjacent to the heater with a set point at the material or system maximum allowable temperature, minus a safety margin.

e) When using a high-limit temperature controller to limit the sheath temperature, the sensor should be located away from the heater so as not to act as a heat sink. The set point will need to be lower than the maximum sheath temperature to compensate for the calculated differential between the pipe temperature and the sheath temperature.

f) Where a pipeline runs through areas with different ambient conditions, such as inside and outside a heated building, two sensors and associated controls may be required for proper temperature control.

6.9.6 Alarm considerations

The primary function of an alarm system is to alert operating personnel that the heat-tracing or process system may be operating outside its design range and should be checked for possible corrective action. The type and complexity of the alarm systems will depend upon the critical nature of the heating system and the plant process requirements. The various alarm systems and their functions are described as follows:

a) *Circuit alarm*—A circuit alarm is used to detect loss of current, voltage, or continuity, or abnormal ground-leakage current of a heat-tracing circuit. The alarm is designed in a variety of styles and includes (but is not limited to) the following devices:

   1) A current sensing device, which monitors the heating device current and alarms when the current falls below or exceeds a preset value while the circuit is energized (usually on series type heating device circuits).

   2) A voltage sensitive device, which monitors circuit voltage, voltage at the end of the heating cable (usually on parallel type heating cables) or monitors voltage on a return wire installed within the heating cable.

   3) A continuity sensing device, which monitors heat-tracing circuit when the system is either energized or de-energized. For de-energized operation, a low-voltage signal or pulse is applied into the heating cable and monitored.

b) *Temperature alarms*—The following descriptions are of various temperature alarms:

   1) *Low-temperature alarm.* The alarm indicates that the sensor temperature has fallen below a set minimum and subsequent cooling may be beyond acceptable operating design criteria. The alarm is incorporated with a temperature controller or is furnished as a separate device.

 Copyright © 2004 IEEE. All rights reserved.

Copyright The Institute of Electrical and Electronics Engineers, Inc.
Provided by IHS under license with IEEE
No reproduction or networking permitted without license from IHS Not for Resale

2) *High-temperature alarm.* The alarm indicates that the sensor temperature has exceeded a set maximum and subsequent heating may be beyond acceptable operating design criteria. As indicated in item 1), the alarm is incorporated with a temperature controller or is furnished as a separate device.

c) *Other available alarms*—Other available alarms include (but are not limited to) the following devices:

1) *Auxiliary contact alarm.* The alarm is used to indicate when a contactor is closed and power is being supplied to the heating system. It can provide a functional check for the operator to ensure proper operation of the contactor, but will not ensure proper operation of the heating circuit if a secondary contactor is open or if the heating cable has lost continuity.

2) *Ground-fault equipment protective devices.* Devices with a nominal 30 mA trip are also available with alarm contacts. These devices monitor the electrical circuit's ground-leakage current. If the total leakage of the circuit exceeds 30 mA, the device will trip, interrupting power to the circuit. Ground-fault protection may be integrated into a heating controller that includes available alarms.

3) *Switch-actuated alarm.* The alarm is usually initiated by an auxiliary contact on the temperature controller. Advanced controllers provide user-programmable alarm function and settings.

4) *Current sensing apparatus.* The apparatus consists of a temperature control bypass switch and an ammeter, or current-sensitive relays and alarms.

5) *Diagnostic alarm.* The alarm is initiated by a diagnostic circuit within the electronic controller signaling failure of an internal control or data processing logic circuit.

6) *Event recording system.* A history of events for temperature or other operational alarms is incorporated in more sophisticated heating control systems or remoted to process control equipment.

6.10 Division 1 and Zone 1 design requirements

Even though approved for Division 1, heating devices are not recommended for installation in the portion of Division 1 similar to Zone 0, where an explosive atmosphere is likely to be present for long periods of time. Heating devices are not permitted in Zone 0. The use of the control, monitoring, and alarm systems identified in 6.9.2 shall be given serious consideration to ensure that the Division 1 or Zone 1 heat-tracing system's integrity is maintained during its operating life.

6.10.1 Division 1

a) System design shall be documented in a format similar to the basic design data (see Annex G) and reviewed by the heating device manufacturer.

b) Where possible, terminations and controls should be located outside the Division 1 area.

c) Each heat-tracing circuit shall be protected by an individual circuit breaker.

d) Ground-fault equipment protective devices connected to heat-tracing circuits in Division 1 areas shall be clearly marked with respect to this classification in the panel.

6.10.2 Zone 1

a) Zone 1 designs shall be reviewed by qualified personnel.

b) Where possible, terminations and controls should be located outside the Zone 1 area.

c) Each heat-tracing circuit shall be protected by an individual circuit breaker.

d) Ground-fault equipment protective devices connected to heat-tracing circuits in Zone 1 areas shall be clearly marked with respect to this classification in the panel.

Copyright © 2004 IEEE. All rights reserved.

Copyright The Institute of Electrical and Electronics Engineers, Inc.
Provided by IHS under license with IEEE
No reproduction or networking permitted without license from IHS Not for Resale

6.11 Safety shower design requirements

Application of heating devices to safety showers and eyewash stations involve unique concerns in addition to the general practices associated with industrial pipe heating applications described in 6.6. Since safety showers are applied as part of overall safety systems for personnel, attention to water temperature and reliability of operation is important. Items to be considered include the following:

a) Prevention of scalding during use requires attention to design factors beyond normal consideration.

b) These same design considerations must be applied to the supply piping for the stations.

c) Minimize or eliminate the safety factor applied to heat-loss calculations to limit possible maximum run away pipe temperature.

d) Tempered water systems should be designed to maintain in the range of 16 °C–35 °C.

e) Tempered water systems require 1135–1700 liters of water (75–114 liters/min for 15 min) water for an emergency event to comply with ANSI-Z 358.1-2004 [B1].

f) Type III pipe temperature controllers are required for tempered water system designs.

g) Freeze protection designs may group several similar shower/wash stations and control them with a single ambient controller with Type III control and alarm functions.

h) Provide high-limit temperature controller per 6.9.3.

i) Recommended monitoring functions include low-temperature alarm, loss-of-voltage alarm, and year-around periodic energization of the heater to verify circuit integrity.

j) Consider control sensor location to minimize the effects of hot spots in supply piping resulting from long vertical runs and from solar gain in outdoor overhead piping.

k) Long vertical runs or stretches of piping with high solar gain may require the use of separate circuits to prevent wide ranges in water temperature over the entire length of the supply system.

l) Where possible, terminations and controls should be located outside the spray pattern of the showerhead.

m) Tempered water designs must have some method to deal with algae and bacterial growth, typically through periodic flushing or recirculation.

n) In extremely cold climates, consideration has to be given to hypothermia of washed personnel (possible use of an enclosed wash station) and to prevention of discharged water freezing and creating a hazard in the discharge area.

7. Installation

7.1 Personnel

All persons involved in the installation, testing, and maintenance of electric heating devices shall be suitably trained in any special techniques required. All work should be monitored by trained supervisors.

7.2 Receiving and storage of materials

Upon receiving the components, cables, and other materials included in the electric heat-tracing system, a general inspection should be conducted, including a confirmation of the correct type and quantities of materials and corresponding documentation. Factory-assembled heat-tracing circuits should be checked for correct circuit number, catalog type, power rating, voltage rating, and length. Bulk materials should also be checked to verify catalog type, power rating, voltage rating, and quantity.

Copyright © 2004 IEEE. All rights reserved.

Copyright The Institute of Electrical and Electronics Engineers, Inc.
Provided by IHS under license with IEEE
No reproduction or networking permitted without license from IHS Not for Resale

7.2.1 Warehousing and handling

Materials should be stored in clean, dry areas. Materials should not be released to the field until they are needed for construction so as to minimize inadvertent damage.

7.2.2 Testing

The following tests should be performed and documented on a heater installation record (see Annex H, item 1, receipt of material):

a) Heating devices should be visually checked for damage incurred during shipping and handling. Continuity and insulation tests may be made as a final quality check. Insulation resistance shall be measured from heating device conductors to metallic braid, metallic sheath, or other equivalent electrically conductive material with a 500 Vdc test voltage. However, it is strongly recommended that higher test voltages be used; mineral insulated heating cables should be tested at, but not exceeding, 1000 Vdc, and polymeric insulated heater cables should be tested at 2500 Vdc. The measured insulation resistance shall not be less than 20 MΩ.

b) Individual controls should be tested to ensure proper calibration. This includes checking for the correct operating temperature range, proper span, and set points.

c) Prefabricated control panels should be completely checked at the manufacturer's shop prior to shipping to verify correct wiring, layout, and function. If such a check is not feasible by the user, documentation should be obtained from the manufacturer, stating that such tests have been performed. After receiving the panels, a general inspection should again be made with attention to controllers and other devices that may have been damaged in shipping.

7.3 Scheduling of installation

The installation of the electric heat-tracing system shall be coordinated with the piping, insulation, electrical, and instrument disciplines to ensure a proper completion. The installation of the heat-tracing system should begin only after the majority of mechanical construction is complete. This does not include the installation of power sources, electrical raceways, and junction boxes. Installation of the actual heating device components and controls should begin after the piping system or vessel has been accepted and installation of piping/vessel system components is completed. Thermal insulation at each segment of the piping system or vessel should not be installed until the heating device installation has been completed and tested on the pipe/vessel in accordance with 7.7.1.

7.4 General installation recommendations

7.4.1 Heating cable installation

a) Cables should be installed on a clean, smooth portion of the pipeline, avoiding any sharp bends or jagged edges. Cables should be oriented to avoid damage due to impact, abrasion, or vibration.

b) Cables shall be attached to the pipe according to the manufacturer's specifications. Care should be taken to avoid high halide content materials (thermal insulation, tape, etc.) over stainless-steel sheath heating cables or pipes. Materials for securing heat tracing must not damage cables and must be appropriate for the maximum exposure temperature.

c) Cables should be applied in a manner to facilitate the removal of valves, small in-line devices, and instruments without the complete removal of cables, or removal of excessive thermal insulation, or cutting of the heating cable.

d) Some valves and complicated in-line devices may need to have their surface irregularities covered with heat-transfer aids to obtain acceptable thermal conductivity.

Copyright © 2004 IEEE. All rights reserved.

Copyright The Institute of Electrical and Electronics Engineers, Inc.
Provided by IHS under license with IEEE
No reproduction or networking permitted without license from IHS Not for Resale

e) Where a heat-transfer medium is used to lower sheath temperature in classified areas, thorough inspections should be conducted to ensure proper initial installation and correct replacement after a repair.

f) Overlapping heating cables can cause excessive temperatures at overlap point and should only be done in accordance with the manufacturer's instructions.

g) Heating cable cold leads and pipe mounted connections that penetrate the thermal insulation should be positioned to facilitate penetrating the thermal insulation in the lower 180° segment to minimize water entrance.

h) It is recommended that conduit power connections to heating cables use a low point drain similar to that shown in Figure 12 to prevent moisture accumulation in the heater connection enclosure.

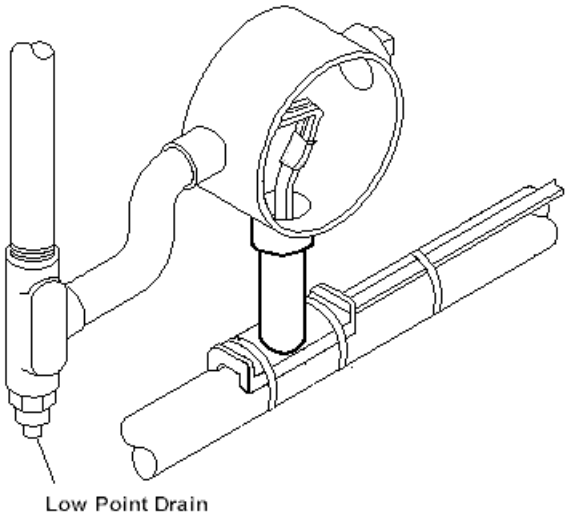

Figure 12—Low point conduit drain to prevent moisture accumulation in connection enclosures

7.4.2 Surface heater installation

a) Surface heating units should be installed on a clean surface free of moisture, dirt, grease, rust, and weld splatter.

b) For vessel heating applications, locate the entire surface heating unit below the normal minimum liquid level.

c) Attach surface heater per manufacturer's instructions. Care shall be given to ensure good contact between the surface to be heated and the heating device. Installation of the heating device over surface irregularities such as weld beads or support members shall be avoided.

7.5 Special Division 1 and Zone 1 installation requirements

7.5.1 Division 1 installation requirements

a) The person(s) responsible for installation shall ensure that the installation and inspection are performed by personnel who are trained, qualified, and knowledgeable in Division 1 heat-tracing systems. The installation and inspection shall be in accordance with the system manufacturer's design drawings, product recommendations, and installation instructions; the installation checklist (see Annex I) shall be followed rigorously.

 Copyright © 2004 IEEE. All rights reserved.

Copyright The Institute of Electrical and Electronics Engineers, Inc.
Provided by IHS under license with IEEE
No reproduction or networking permitted without license from IHS Not for Resale

b) Verify that the proposed installation utilizes a heating device and component system approved for Division 1. Review manufacturer's documentation for specific Division 1 or installation requirements, and ensure that the heating system is compatible with the environment.

c) Visually examine each heating device and component prior to installation for any possible handling or shipping damage. In addition, electrically test the continuity of the metallic covering, metallic braid, or other equivalent electrically conductive material. Electrically test the integrity of the electrical insulation of the heating device, according to the procedure described in 7.2.2. The measured value shall not be less than 20 MΩ.

d) Each seal fitting shall be limited to one heating device or power lead. In addition, it is required that a seal fitting be installed in the power supply circuit, cable, or conduit immediately adjacent to the heat-tracing power connection box.

e) After heating device layout, installation, and termination on the system, visually inspect each connection and component, and electrically test the insulation resistance of each heating device circuit according to 7.7.1 prior to pouring seals. The measured value shall not be less than 20 MΩ.

f) After installation of the thermal insulation, the overjacket's integrity shall be tested according to the procedure described in 7.7.1 prior to pouring the seals.

g) Examine the power service for each heat-tracing circuit. Ground-fault equipment protection is required for each circuit. Test the operation of each ground-fault equipment protection device prior to connecting to heating system in accordance with the manufacturer's instructions.

h) For Division 1 installations only, the person(s) responsible for the installation shall complete a document similar in format to the Division 1/Zone 1 installation checklist (see Annex I) and submit to the heating device manufacturer. This is necessary to complete approval requirements by the certifying agency.

7.5.2 Zone 1 installation requirements

a) The person(s) responsible for installation shall ensure that the installation and inspection are performed by personnel who are trained, qualified, and knowledgeable in Zone 1 heat-tracing systems. The installation and inspection shall be in accordance with the system manufacturer's design drawings, product recommendations, and installation instructions; the installation checklist (Annex I) shall be followed rigorously.

b) Verify that the proposed installation utilizes a heating device and component system approved for Zone 1. Review manufacturer's documentation for specific Zone 1 installation requirements and ensure that the heating system is compatible with the environment.

c) Visually examine each heating device and component prior to installation for any possible handling or shipping damage. In addition, electrically test the continuity of the metallic covering, metallic braid, or other equivalent electrically conductive material. Electrically test the integrity of the electrical insulation of the heating device, according to the procedure described in 7.2.2. The measured value shall not be less than 20 MΩ.

d) For systems that require seal fittings, each seal fitting shall be limited to one heating device. In these systems, seal fittings shall be installed in the power supply circuit, cable, or conduit, as required, immediately adjacent to the heat-tracing power connection box.

e) After heating device layout, installation, and termination on the system, visually inspect each connection and component, and electrically test the insulation resistance of each heating device circuit according to 7.7.1 prior to pouring seals, if seals are used. The measured value shall not be less than 20 MΩ.

f) After installation of the thermal insulation, the overjacket's integrity should be tested according to the procedure described in 7.7.1 prior to pouring the seals, if seals are used.

g) Examine the power service for each heat-tracing circuit. Ground-fault equipment protection is required for each circuit. Test the operation of each ground-fault equipment protection device prior to connecting to heating system in accordance with the manufacturer's instructions.

Copyright © 2004 IEEE. All rights reserved.

Copyright The Institute of Electrical and Electronics Engineers, Inc.
Provided by IHS under license with IEEE
No reproduction or networking permitted without license from IHS Not for Resale

7.6 Controls and sensors

7.6.1 General

Water and corrosive vapor intrusion in enclosures are primary factors leading to premature failures. The use of water resistant enclosures for outside installations is recommended to reduce maintenance, increase reliability, and increase component life. The use of corrosion-resistant enclosures should be considered for outdoor corrosive locations. The maximum temperature rating of the bulb and capillary should be considered when selecting a mechanical controller.

7.6.2 Ambient sensing temperature controller

Typically, a temperature sensing device is mounted outdoors. The sensor location should see a representative ambient temperature and should not be exposed to direct sunlight, process steam discharge, or building heat.

7.6.3 Pipe sensing temperature controller

This may be a bulb and bellows type similar to the ambient sensing temperature controller, except the sensor is located in intimate contact with the pipe wall. The sensor may be encased in heat-transfer cement, and care should be exercised when banding so as not to deform the sensor. Installation precautions are otherwise identical to those associated with ambient sensing types. An alternative method is pipe sensing with controllers utilizing T/C, RTDs, or other temperature sensing means with the controller being locally mounted or panel-mounted in a protected location.

The high-limit temperature controller is a controller that is generally similar to the pipe sensing controller, and it is installed in the same manner. The high-limit temperature controller is used to limit the maximum pipe temperature, which in turn limits the maximum sheath temperature.

7.7 Cable testing after installation

7.7.1 Heating device

After installation of the heating device and before the application of the thermal insulation, the insulation resistance of the heating device shall be measured from the heating device conductors to the braid or sheath as described in 7.2.2 under normal dry conditions. The tests shall be performed before the connection of associated wiring or control equipment. The measured value should not be less than 20 MΩ. After the application of thermal insulation, the measured value should not be less than 5 MΩ.

7.7.2 Branch circuit

It is recommended that the insulation resistance of the entire branch circuit, after the thermal insulation is complete, should not be less than 5 MΩ measured as described in 7.2.2. If the value is below 5 MΩ, verify that integrity of the heating device has not been compromised. If required, the operation of each electric heating device should be checked by applying rated voltage and recording current and pipe temperature at steady-state conditions. Time should be allowed for the current to stabilize, as the start-up current is sometimes higher than the operating current.

7.8 Thermal insulation—Recommendations

a) Verify that the type, inside diameter, and thickness agree with the values used to select the heating devices.

Copyright © 2004 IEEE. All rights reserved.

Copyright The Institute of Electrical and Electronics Engineers, Inc.
Provided by IHS under license with IEEE
No reproduction or networking permitted without license from IHS Not for Resale

b) Protect against water absorption during storage, handling, and installation. Use temporary protection when the moisture barrier is not immediately installed.

c) All penetrations should be sealed. Wherever possible, penetrations should be in the lower 180° segment of the thermal insulation system. When penetrations are on the upper 180°, all penetrations should be sealed and a rain shield provided to minimize moisture entrance.

d) Cut and fit thermal insulation to avoid air gaps. Stagger segment joints to break up convective heat loss.

e) Where low-density (soft) insulation is utilized, provision is necessary to ensure that subsequent temperature cycling will not result in the heating cable being surrounded by the insulation. The use of a metal foil at valves and irregular shapes is an effective barrier between the cable and the insulation.

f) Apply thermal insulation to exposed heat sinks, such as pipe shoes, supports, and appurtenances, and seal with an appropriate weather barrier.

g) Install circumferential closure bands with nonsetting sealer between the overlapped sections of metallic weather barriers. Simple overlapped corrugated metal on horizontal lines or equipment is not an effective weather barrier.

h) When installing thermal insulation on a high-temperature service, careful attention should be given to expansion joints.

7.9 Functional check and field documentation—Recommendations

a) Close all branch circuits and verify proper current. A temporary bypass may be required for the temperature control device.

b) Verify that monitor or alarm circuits are operable. A bypass may be required at field contacts.

c) A heater commissioning record (see Annex J for an example) for each circuit should clearly record all testing and commissioning data for the following reports:

   1) Electrical insulation resistance values for each measurement taken

   2) Applied voltage, resulting current, and pipe temperature, if required

   3) Alarm and monitor components are operated as intended

   4) Calibration check at the temperature controller set point has been performed and the controller has been set at this value

   5) Permanent tagging and identification have been completed as follows:

      i) Branch circuit breaker

      ii) Monitor and alarm apparatus

      iii) Heating device power connection

      iv) Circuit number and set point for each thermostat

      v) External pipeline decal to indicate presence of electric tracing shall be applied to the exterior of the thermal insulation cladding at intervals not to exceed 6 m and shall also be placed on the cladding over each valve or other equipment that may require periodic maintenance.

d) Final documentation should be tabulated and recorded on a circuit basis and should include verified *as built* drawings as well as the data in item c). An engineering flow diagram showing the location of each circuit is valuable during operation as an aid to resolving abnormal conditions, as well as assisting in the maintenance of equipment.

Copyright © 2004 IEEE. All rights reserved.

Copyright The Institute of Electrical and Electronics Engineers, Inc.
Provided by IHS under license with IEEE
No reproduction or networking permitted without license from IHS
Not for Resale

8. Maintenance

8.1 General maintenance recommendations

There are three recommendations for a satisfactory maintenance program of electrical heat tracing:

a) The heat tracing should be properly designed and installed.

b) Maintenance personnel should be knowledgeable about the heat-tracing system installed and have sufficient documentation to administer the program. The maintenance persons should have a thorough knowledge of the equipment and have the ability to expediently locate defects and repair any component. Changes in personnel or equipment require that training should be repeated periodically if the maintenance program is to be successful.

c) Establishment of a preventive maintenance program for the continuing inspection, reporting, and recording of the condition and the repair of all the heat-tracing equipment.

8.2 Division 1/Zone 1 maintenance recommendations

a) Visually examine the exposed portions of each heating device segment and components for possible damage after every maintenance activity.

b) Examine seal fittings at each affected power connection, tee, splice, and end termination.

c) After reinstallation of the heating device, visually inspect each affected component and connection.

d) Test the electrical insulation resistance of each affected heating device according to 7.2.2.

e) Examine power service for each affected heater circuit. Test the operation of the ground-fault device of each affected circuit.

f) In the event of a ground fault or over-current interruption, the device should not be reset until the cause of the trip has been investigated by qualified personnel.

8.3 Visual inspection

Periodic visual inspection should be performed to check for damage or defects in the thermal insulation and weather barrier, with attention to abnormal heat sinks. If damage or defects are found, the insulation should be removed, repaired, or replaced, and the heating device inspected for any damage. Inspection should also consist of observing all parts and connections for the following conditions:

a) Overheating

b) Presence of leaks, corrosion, and foreign matter

c) Looseness of electrical connections

d) Thermostats and control cabinets not properly sealed or free of moisture

Visual inspections should be carried out on a routine basis and after any mechanical maintenance on system components, such as pumps or valves, has been performed. The proper scheduling of these inspections should depend upon the manufacturer's recommendations and the usage of the equipment itself.

8.4 Periodic operational check

Periodic operational checks on electric heat-tracing circuits are essential for maintaining reliable, trouble-free operation of the process. It is recommended that these checks be scheduled at regular intervals depending on the importance and usage of the heat tracing to the process or plant operation. When electrical heat tracing is used for freeze protection, a major operational check should be carried out during the fall season prior to freezing conditions. All circuits and controls should be checked for proper operation. Each

 Copyright © 2004 IEEE. All rights reserved.

Copyright The Institute of Electrical and Electronics Engineers, Inc.
Provided by IHS under license with IEEE
No reproduction or networking permitted without license from IHS Not for Resale

circuit should be checked for electrical insulation resistance, continuity or normal current flow, and properly applied voltage. All controls (thermostats, indicating lights, meters, controllers, etc.) should be checked for proper operation and indication. When the heat tracing is used for normal temperature maintenance or critical process control, an operational check should be carried out on a more frequent basis. The electrical insulation resistance and heating device continuity should be checked after any mechanical maintenance has been performed on pipelines, vessels, or equipment that has been heat traced to ensure the integrity of the heat cable before re-energizing. When ground-fault equipment protective devices are used, devices should be tested periodically, whenever the heat-tracing system is energized.

8.5 Record keeping

Keeping adequate, up-to-date records of the electric heat-tracing systems is an important aspect of a good preventive maintenance program. It is recommended that the system contain five basic sets of records, which may or may not be separated. These records are as described in the following subclauses.

8.5.1 Equipment record

This usually consists of drawings that contain the basic design information on the heating device itself, such as the type, line size, length, location, watts per foot, and power source, and includes the basic design data (Annex G), the heater installation record (Annex H), and the heater commissioning record (Annex J). Drawings tabulating system information on branch protective devices, monitoring instrumentation, and temperature controllers with their corresponding set points should be kept current and made readily available to maintenance and operating personnel.

8.5.2 Cost or repair record

This keeps a running record of the costs of maintaining the heat-tracing system. It is the essential diagnostic record to review cost vs. benefits.

8.5.3 Maintenance log record

This is a listing of the points to be checked on a particular system and the data recorded, which will provide a history of checks. See Annex K.

8.5.4 Maintenance schedule of inspections

This differs from 8.5.3 in that it is a complete listing of the inspections and tests required of the maintenance personnel on the various heat-traced equipment.

8.5.5 Inventory control

This is often combined with the cost record or can be completely separated. This is to keep track of the parts on hand to be used to make repairs on the electric heat-tracing systems.

Copyright © 2004 IEEE. All rights reserved.

Copyright The Institute of Electrical and Electronics Engineers, Inc.
Provided by IHS under license with IEEE
No reproduction or networking permitted without license from IHS Not for Resale

Annex A

(informative)

Bibliography

[B1] ANSI Z358.1-2004, Emergency Eyewash and Shower Temperature.[7]

[B2] ANSI/ISA 12.01.01-1999, Definitions and Information Pertaining to Electrical Instruments in Hazardous (Classified) Locations.[8]

[B3] API RP540-1999, Electrical Installations in Petroleum Processing Plants, Fourth Edition.[9]

[B4] ASTM C 450-2002, Standard Practice for Fabrication of Thermal Insulating Fitting Covers for NPS Piping, Vessel Lagging, and Dished Head Segments.[10]

[B5] ASTM C 585-1990, Standard Practice for Inner and Outer Diameters of Rigid Thermal Insulation for Nominal Sizes of Pipe and Tubing (NPS System).

[B6] Becker, Martin, *Heat Transfer, A Modern Approach,* New York, Plenum Press, 1986.

[B7] BS 6351-2:1983, Electric surface heating—Guide to the design of electric surface heating systems, Appendix A.[11]

[B8] EN 50019-2000, Electrical Apparatus for Potentially Explosive Atmospheres—Increased Safety 'E.'[12]

[B9] Erickson, James, C., *Handbook of Electrical Heating for Industry,* IEEE Press, Institute of Electrical and Electronics Engineers, Inc., 1995.

[B10] Federal Energy Administration, "Economic Thickness for Industrial Insulation," Energy Conservation Paper, no. 46, Aug. 1976.

[B11] FM Approvals, Approval Standard, March 1989. Explosion Proof Equipment, Class Number 3615.

[B12] Hilbert, R., "Warmeabgabe von Geheizen Drahten und Rohren," *Forsch Geb Ingenieurwes,* vol. 4, p. 220, 1933.

[B13] Holman, J. P., *Heat Transfer,* 4th ed., New York: McGraw Hill, 1976.

[B14] IEC 60079-0:2004, Electrical apparatus for explosive gas atmospheres—Part 0: General requirements.[13]

---

[7]ANSI publications are available from the Sales Department, American National Standards Institute, 25 West 43rd Street, 4th Floor, New York, NY 10036, USA (http://www.ansi.org/).

[8]ISA publications are available from The Instrumentation, System, and Automation Society, 67 Alexander Drive, Research Triangle Park, NC 27709 (http://www.isa.org/).

[9]API historical materials can be obtained (for a fee) from the American Petroleum Institute Library, 1200 L Street NW, Washington, DC 20005, USA (http://www.api.org/).

[10]ASTM publications are available from the American Society for Testing and Materials, 100 Barr Harbor Drive, West Conshohocken, PA 19428-2959, USA (http://www.astm.org/).

[11]BS publications are available from Global Engineering Documents, 15 Inverness Way East, Englewood, Colorado 80112, USA (http://global.ihs.com/).

[12]EN publications are available from the European Committee for Standardization (CEN), 36, rue de Stassart, B-1050 Brussels, Belgium (http://www.cenorm.be).

 Copyright © 2004 IEEE. All rights reserved.

Copyright The Institute of Electrical and Electronics Engineers, Inc.
Provided by IHS under license with IEEE
No reproduction or networking permitted without license from IHS Not for Resale

[B15] IEC 60079-1:2003, Electrical apparatus for explosive gas atmospheres—Part 1: Flameproof enclosures 'D'.

[B16] IEC 60079-7:2001, Electrical apparatus for explosive gas atmospheres—Part 7: Increased safety 'E.'

[B17] IEC 60079-10:2002, Electrical apparatus for explosive gas atmospheres—Part 10: Classification of hazardous areas.

[B18] IEC 62086-1:2001, Electrical apparatus for explosive gas atmospheres—Electrical resistance trace heating—Part 1: General and testing requirements.

[B19] IEC 62086-2:2001 Electrical apparatus for explosive gas atmospheres—Electrical resistance trace heating—Part 2: Application guide for design, installation, and maintenance.

[B20] IEC 61423-1:1995, Heating cables for industrial applications—Part 1: Performance requirements and test methods.

[B21] IEC 61423-2:1995, Heating cables for industrial applications—Part 2: constructional and material requirements.

[B22] IEEE 100, *The Authoritative Dictionary of IEEE Standard Terms,* Seventh Edition.[14,15]

[B23] IEEE Std 622™-1987 (Reaff 1994), IEEE Recommended Practice for the Design and Installation of Electric Heat Tracing Systems for Nuclear Power Generating Systems.

[B24] IEEE Std 622A™-1984 (Reaff 1999) IEEE Recommended Practice for the Design and Installation of Electric Pipe Heating Control and Alarm Systems for Power Generating Stations.

[B25] IEEE Std 844™-2000, IEEE Recommended Practice for Electrical Impedance, Induction, and Skin Effect Heating of Pipelines and Vessels.

[B26] McAdams, W. H., *Heat Transmission,* 3rd ed., New York: McGraw Hill, 1954.

[B27] Turner, William C., and Malloy, John F., *Handbook of Thermal Insulation Design Economics for Pipes and Equipment,* Robert E. Kruger Publishing Company, McGraw-Hill: New York, 1980.

[B28] UL 83-2003, Safety Standard for Thermoplastic-Insulated Wires and Cables, Thirteenth Edition.[16]

[13]IEC publications are available from the Sales Department of the International Electrotechnical Commission, Case Postale 131, 3, rue de Varembé, CH-1211, Genève 20, Switzerland/Suisse (http://www.iec.ch/). IEC publications are also available in the United States from the Sales Department, American National Standards Institute, 11 West 42nd Street, 13th Floor, New York, NY 10036, USA.

[14]The IEEE standards or products referred to in Annex A are trademarks owned by the Institute of Electrical and Electronics Engineers, Incorporated.

[15]IEEE publications are available from the Institute of Electrical and Electronics Engineers, 445 Hoes Lane, P.O. Box 1331, Piscataway, NJ 08855-1331, USA (http://standards.ieee.org/).

[16]UL standards are available from Global Engineering Documents, 15 Inverness Way East, Englewood, Colorado 80112, USA (http://global.ihs.com/).

Copyright © 2004 IEEE. All rights reserved.

--`,,`-`-`,,`,,`,`,,`---
Copyright The Institute of Electrical and Electronics Engineers, Inc.
Provided by IHS under license with IEEE
No reproduction or networking permitted without license from IHS Not for Resale

Annex B

(informative)

Pipe heat-loss considerations

B.1 Heat-Loss formula and example calculations

There are many variations of the general equation [see Equation (B.1)] that define the heat loss from a pipe. Some of these variations are simplifications made for the ease of calculation, conservative (high) values or similar reasons. Other variations reflect the absence of terms that are dependent on the insulation system. The variation selected will therefore be dependent on the situation at hand and the desired goal.

$$q = \frac{T_p - T_a}{\frac{1}{\pi D_1 h_i} + \frac{\ln(D_2/D_1)}{2\pi K_1} + \frac{\ln(D_3/D_2)}{2\pi K_2} + \frac{1}{\pi D_3 h_{co}} + \frac{1}{\pi D_3 h_o}} \quad \text{(B.1)}$$

where

q is the heat loss per unit length of pipe (W/m),

T_p is the desired maintenance temperature (°C),

T_a is the minimum design ambient temperature (°C),

D_1 is the inside diameter of the inner insulation layer (m),

D_2 is the outside diameter of the inner insulation layer (m) (inside diameter of the outer insulation layer when present),

D_3 is the outside diameter of the outer insulation layer when present (m),

K_1 is the thermal conductivity of the inner layer of insulation evaluated at its mean temperature (W/m·°C),

K_2 is the thermal conductivity of the outer layer of insulation, when present, evaluated at its mean temperature (W/m·°C),

h_i is the inside air contact coefficient from the pipe to the inner insulation surface when present,

h_{co} is the inside air contact coefficient from the outer insulation surface to the weather barrier when present (W/m^2·°C),

h_o is the outside air film coefficient from the weather barrier to ambient (W/m^2·°C). Typical values for this term range from 3 W/m^2·°C to 284 W/m^2·°C for low (below 50 °C) temperature applications.

Equation (B.1) includes all common resistances to heat flow that may be present. For a typical insulation system consisting of a single type of insulation, no oversizing, and a metal weather barrier, Equation (B.1) reduces to Equation (B.2):

$$q = \frac{T_p - T_a}{\frac{\ln(D_2/D_1)}{2\pi K} + \frac{1}{\pi D_2 h_{co}} + \frac{1}{\pi D_2 h_o}} \quad \text{(B.2)}$$

When a mastic weather barrier is used, Equation (B.2) reduces to Equation (B.3):

Copyright © 2004 IEEE. All rights reserved.

Copyright The Institute of Electrical and Electronics Engineers, Inc.
Provided by IHS under license with IEEE
No reproduction or networking permitted without license from IHS Not for Resale

$$q = \frac{T_p - T_a}{\frac{\ln(D_2/D_1)}{2\pi K} + \frac{1}{\pi D_2 h_o}} \tag{B.3}$$

Finally, the $1/(\pi)(D_2)(h_o)$ term may be omitted to give a conservative (high) heat loss. Equation (B.3) then becomes Equation (B.4), which expresses heat loss per unit length.

$$q = \frac{2\pi K(T_p - T_a)}{\ln(D_2/D_1)} \tag{B.4}$$

Equation (B.5) gives the total heat loss for a pipe of length L. This is the form of Equation 1 used in BS 6351-2:1983 [B7].

$$q = \frac{2\pi KL(T_p - T_a)}{\ln(D_2/D_1)} \tag{B.5}$$

It should be noted that the film coefficients and insulation thermal conductivities are functions of temperature. Initially, the temperature at the location of each resistance is not known and should be assumed. Based on the initial temperature profile assumption, a heat loss and a new temperature profile is calculated. If agreement between the assumed temperature profile and the calculated temperature profile occurs, then a solution has been obtained. If not, the calculated temperature profile should be used for the next assumed temperature profile and the calculation should be repeated (see Figure B.1).

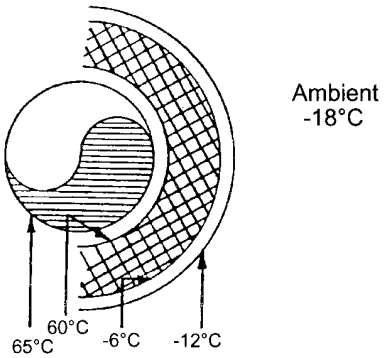

Figure B.1—Assumed temperature gradients

Air film coefficients h_{co}, h_o, and h_i are effective values based on the combined heat losses due to convection and radiation. The convective portion of these coefficients is highly dependent on the velocity of the air surrounding the surface. If the air is still, heat loss due to convection is denoted as free convection. If the air is circulated by wind, the loss is termed as forced convection. Estimation of heat-transfer coefficients due to convection is based on experimental data. This data essentially relates Nusselt numbers to Rayleigh numbers for free convection (McAdams [B26]) and Nusselt numbers to Reynolds and Prandtl numbers for forced convection (Holman [B13], McAdams [B26]). Since electric heat-tracing systems are predominantly concerned with heat loss from cylindrical pipes in air at atmospheric pressure conditions, the empirical relationships describing these heat-transfer rates can be simplified as follows.

Simplified equations for laminar free convection in air at atmospheric pressure (McAdams [B26]) are shown in Equation (B.6) and Equation (B.7).

$$h = C_1\left[\frac{T_s - T_{amb}}{d}\right]^{0.25} \qquad \text{for horizontal pipes} \tag{B.6}$$

Copyright © 2004 IEEE. All rights reserved.

Copyright The Institute of Electrical and Electronics Engineers, Inc.
Provided by IHS under license with IEEE
No reproduction or networking permitted without license from IHS
Not for Resale

$$h = C_2\left[\frac{T_s - T_{amb}}{L}\right]^{0.25} \quad \text{for vertical pipes} \tag{B.7}$$

where

h is the heat-transfer coefficient due to free convection (W/m^2·°C),
C_1 is 1.32
T_s is the temperature of cylindrical surface (°C),
T_{amb} is the temperature of surrounding ambient air (°C),
d is the diameter of cylindrical surface (m),
C_2 is 1.42
L is the vertical length of cylinder (m).

Simplified equations for forced convection for a cylinder in air at atmospheric pressure (Holman [B13], McAdams [B26]) are shown in Equation (B.8):

$$h_f = \frac{C_3 k_f}{d}\left(\frac{Vd}{v_f}\right)^n \quad (Pr)^{1/3} \tag{B.8}$$

where

h_f is the heat-transfer coefficient due to forced convection (W/m^2·°C),
C_3 is 0.0266, the empirical dimensionless constant,
k_f is the thermal conductivity of air evaluated at the average air film temperature,
d is the diameter of cylinder (m),
V is the wind velocity (m/s),
v_f is the kinematic viscosity, evaluated at the average air film temperature (m^2/s),
n is 0.805, the empirical dimensionless constant,
Pr is the Prandtl number for air evaluated at the average air film temperature (dimensionless).

NOTE—C_3 and n are constant for Reynolds numbers in the range of 40 000 to 400 000, which is sufficient for most typical heat-tracing applications. The Reynolds number (Re) is a dimensionless number defined as follows:

$$Re = \frac{Vd}{v_f}$$

where these variables are defined identically to the variables in Equation (B.8).

Heat loss due to radiation from a cylinder is described by the Stefan-Boltzmann law of thermal radiation (McAdams [B26]), as shown in Equation (B.9):

$$q_r = \sigma\varepsilon A[(T_1 + T_0)^4 - (T_2 + T_0)^4] \tag{B.9}$$

where

q_r is the heat loss of cylinder (W),
σ is 5.669·10^{-8} (W/m^2·K^4),
ε is the emissivity of radiating surface (dimensionless),
A is the surface area of radiating cylinder (m^2),
T_1 is the surface temperature of cylinder (°C),
T_0 is 273 °C, the constant converting temperature (°C) to absolute temperature (K),
T_2 is the temperature of media surrounding the cylinder (°C).

Copyright © 2004 IEEE. All rights reserved.

Copyright The Institute of Electrical and Electronics Engineers, Inc.
Provided by IHS under license with IEEE
No reproduction or networking permitted without license from IHS Not for Resale

Although radiation heat transfer is dependent on a fourth power temperature differential, it can be linearized for relatively small temperature differences and treated as an effective convective heat-transfer coefficient, as shown in Equation (B.10) and Equation (B.11):

$$h_r = 4\sigma\varepsilon T_m^3 \tag{B.10}$$

where

h_r is the linearized radiation heat-transfer coefficient (W/m^2·°C),

T_m is the estimated mean absolute temperature between the surroundings and the radiating surface (K).

$$T_m = T_0 + \frac{T_1 + T_2}{2} \tag{B.11}$$

where the variables are defined as in Equation (B.9).

Example heat-loss calculations:

Pipe size: 3.5 in Schedule 40 mild steel pipe.

Insulation: Cellular glass, 38 mm thick, with oxidized aluminum weather barrier (oversized to ASTM Standard 4 in nominal pipe insulation size to accommodate a 10 mm outer diameter electric tracer).

T_p is 65 °C,

T_a is –18 °C,

Wind is 10 m/s,

D_2 is 0.194 m,[17]

D_1 is 0.116 m,

Emittance of oxidized aluminum weather barrier is 0.11,

Emittance of pipe is 0.9,

Emittance of insulation is 0.9,

Thermal conductivity of insulation at 24 °C mean is 0.0562 W/m·°C.

Find: The heat loss per unit length of pipe in both metric and English units, for a horizontal pipe, using

a) Equation (B.4) (which results in the highest calculated heat loss)
b) Equation (B.3)
c) Equation (B.2)

Example 1, using Equation (B.4):

$$q = \frac{2\pi K(T_p - T_a)}{\ln(D_2/D_1)}$$

[17]It is important to note that ASTM standard thicknesses are nominal and may vary depending on pipe size and nominal insulation thicknesses. Therefore, it is important to know if the insulation thickness being specified is per ASTM C 585-1990 [B5] or if it is the actual thickness.

Copyright © 2004 IEEE. All rights reserved.

Copyright The Institute of Electrical and Electronics Engineers, Inc.
Provided by IHS under license with IEEE
No reproduction or networking permitted without license from IHS Not for Resale

$$q = \frac{(2)(\pi)(0.0562)(65-(-18))}{\ln(0.194/0.116)}$$

q = 56.96 W/m

Example 2, using Equation (B.3):

$$q = \frac{T_p - T_a}{\frac{\ln(D_2/D_1)}{2\pi K} + \frac{1}{\pi D_2 h_o}}$$

$$q = \frac{(65-(-18))}{\frac{\ln(0.194/0.116)}{2(\pi)(0.0562)} + \frac{1}{(\pi)(0.194)(52.91)}}$$

$$q = \frac{(83)}{1.457 + 0.031}$$

q = 55.78 W/m

Example 3, using Equation (B.2):

$$q = \frac{T_p - T_a}{\frac{\ln(D_2/D_1)}{2\pi K} + \frac{1}{\pi D_2 h_{co}} + \frac{1}{\pi D_2 h_o}}$$

h_{co} is the combination of natural convection and radiation. Using Equation (B.7) and Equation (B.10), and assuming a 6 °C temperature differential between the outer insulation surface and the weather barrier.

$$h_{co} = 1.32\left[\frac{-6-(-12)}{0.194}\right]^{0.25} + 4(0.9)(5.669 \cdot 10^{-8})\left[273 + \frac{-6+(-12)}{2}\right]^3$$

= 3.11 + 3.76

= 6.87

h_o is the combination of forced convection and radiation. Using Equation (B.8) and Equation (B.10), and assuming an 8 °C temperature differential between the weather barrier and the ambient temperature.

$= h_f + h_r$

Properties of air evaluated at the film temperature are

k_f = 0.0228 W/m·°C

ν_f = 1.07 (10^{-5} m/s)

Pr = 0.72

Copyright © 2004 IEEE. All rights reserved.

Copyright The Institute of Electrical and Electronics Engineers, Inc.
Provided by IHS under license with IEEE
No reproduction or networking permitted without license from IHS Not for Resale

$$h_o = \frac{0.0266(0.0228)}{0.194}\left[\frac{11.2(0.194)}{1.07 \cdot 10^{-5}}\right]^{0.805}(0.72)^{1/3} + 4(0.11)(5.669 \cdot 10^{-8})\left[273 + \frac{-12 + (-18)}{2}\right]^3$$

$= 52.49 + 0.423$

$= 52.91$

From Equation (B.2):

$$q = \frac{(65 - (-18))}{\frac{\ln(0.194/0.116)}{2(\pi)(0.0562)} + \frac{1}{(\pi)(0.194)(52.91)}}$$

$$q = \frac{83}{1.457 + 0.239 + 0.031}$$

$q = 48.06$ W/m

A more finite analysis of the above problem may be obtained using iterative techniques to determine the thermal conductivity of the thermal insulation and properties of the air film. This would be accomplished by determining what the actual temperature drop across the various thermal resistances would be. However, since these properties are not strong functions of temperature for the small temperature changes that would be found in this example, the total heat loss would be affected minimally.

Copyright © 2004 IEEE. All rights reserved.

Copyright The Institute of Electrical and Electronics Engineers, Inc.
Provided by IHS under license with IEEE
No reproduction or networking permitted without license from IHS Not for Resale

Annex C

(informative)

Vessel heat-loss considerations

Unlike pipes, vessel heat losses are affected by heat sinks that are integral to the vessel body and must be considered during the basic calculation. To determine the total heat loss, the calculations are broken down into different regions. The total is derived by summing the regional heat losses, as shown in Equation (C.1):

$$Q_{total} = Q_{ins} + Q_{slab} + Q_{supt} + Q_{manhole} \quad \text{(C.1)}$$

Because of the huge varieties of geometries and fluids, taking a strict theoretical approach to calculation of all possible heat-loss rates will result in a very complex procedure. The majority of tank heating applications do not require such precision. The following equations will provide a conservative solution for vessel heat loss.

C.1 Insulation heat loss (Q_{ins})

The heat loss through the insulated vessel wall (Q_{ins}) is calculated with Equation (C.2). The worst case heat-loss assumption is made—that the vessel is full. Calculations for partially filled tanks are beyond the scope of this annex. In addition, the fluid film layer on the inside of the tank wall is ignored.

$$Q_{ins} = \left(\frac{T_p - T_a}{\frac{1}{h_i} + \frac{x}{k} + \frac{1}{h_{co}} + \frac{1}{h_o}} \right) A \quad \text{(C.2)}$$

where

Q_{ins} is the heat loss for region (W),
A is the tank surface area of insulated region (m^2),
T_p is the maintain temperature (°C),
T_a is the minimum ambient temperature (°C),
x is the thermal insulation thickness (m),
k is the thermal insulation conductivity at mean temperature (W/m·°C),
h_i is the inside air contact coefficient from tank to inside insulation surface ($W/m^2 \cdot °C$),
h_{co} is the inside air contact coefficient from insulation outer surface to weather barrier ($W/m^2 \cdot °C$),
h_o is the outside air film coefficient from weather barrier or insulation outer surface to ambient ($W/m^2 \cdot °C$).

C.2 Slab surface areas (Q_{slab})

If a tank rests directly on a concrete slab, then the heat loss through the bottom of the tank and the concrete slab is calculated in a similar fashion to *wet* areas. For slabs, the term T_{slab} is taken to be the temperature at the slab-soil interface and it replaces the minimum ambient temperature (T_a). Unfortunately, this temperature varies depending on the location under the slab because of the influence of two separate temperatures; the minimum ambient and the deep soil (T_{soil}). The temperature near the edge of the slab will

Copyright © 2004 IEEE. All rights reserved.

Copyright The Institute of Electrical and Electronics Engineers, Inc.
Provided by IHS under license with IEEE
No reproduction or networking permitted without license from IHS Not for Resale

generally be lower than the temperature near the middle because the minimum ambient has more of an effect near the outer edges.

When computers are available, the preferred approach to calculating this temperature involves performing a simple numerical nodal temperature analysis for various locations along the slab-soil interface. This approach relies on the fact that at steady state, there will be no net heat transfer from any node, and a series of simultaneous equations can be generated. These equations can then be solved for the temperature of each node using matrix math techniques. Once the temperature of each node is known, Equation (C.3) can be used to calculate the heat loss for that region of the slab.

$$Q_{node} = \left(\frac{T_p - T_{node}}{\frac{x_{wall}}{k_{wall}} + \frac{x_{slab}}{k_{slab}}} \right) A_{node} \quad \text{(C.3)}$$

where

Q_{node} is the heat loss for slab region between nodes (W),
A_{node} is the surface area of region between nodes (m^2),
T_p is the maintain temperature (°C),
T_{node} is the calculated nodal temperature (°C),
x_{slab} is the thickness of concrete slab (m),
k_{slab} is the concrete thermal conductivity at mean temperature (W/m·°C),
x_{wall} is the tank wall thickness (m),
k_{wall} is the tank wall conductivity at mean temperature (W/m·°C).

The total heat loss through the slab would then be obtained by summing the nodal heat losses.

There are several analytic alternatives to the computerized nodal temperature analysis approach discussed previously. The analytic approach is usually based on breaking the slab heat loss into the following two components:

a) The outer region, which treats concrete slab as a fin, see Equation (C.4)
b) The inner region, which uses an equation similar to Equation (C.3)

Typically, the analytic method will yield higher heat losses than the nodal method.

C.3 Support heat loss (Q_{supt})

Supports or any other appurtenances which are in contact with the tank wall and extend through the thermal insulation are treated as infinite fins and their heat loss is calculated using the generalized form of the fin equation, as shown in Equation C.4:

$$Q_{supt} = \sqrt{h_f P k_s A_c \cdot (T_p - T_a)}\,\varepsilon \quad \text{(C.4)}$$

where

Q_{supt} is the heat loss for individual support (W),
A_c is the cross-sectional area of the section that protrudes through the thermal insulation (m^2),
P is the perimeter of A above (m),
T_p is the maintain temperature (°C),
T_a is the minimum ambient temperature (°C),

Copyright © 2004 IEEE. All rights reserved.

Copyright The Institute of Electrical and Electronics Engineers, Inc.
Provided by IHS under license with IEEE
No reproduction or networking permitted without license from IHS Not for Resale

k_s is the thermal conductivity of support (W/m·°C),

h_f is the convection coefficient from exposed support surface to ambient (W/m^2·°C),

ε is the efficiency of fin. This is a user-definable value. In most cases it should be set to 1.0.

C.4 Manhole heat loss ($Q_{manhole}$)

If manholes or hand holds are in contact with the fluid, then their heat loss can be determined by using Equation (C.1). If they are not in contact with the fluid, they can safely be ignored.

C.5 Convection coefficient equations

Convection coefficients are difficult to accurately predict because of the wide variety of geometric and fluid conditions encountered with tank heating. Fortunately, for insulated tanks, the effect that many of the coefficients have on overall heat loss is quite small. In order to simplify calculation of these coefficients, only three equations are used. Note that heat transfer due to radiation is included in the convection coefficient calculation, thus yielding an *effective* heat-transfer coefficient.

C.5.1 Free convection, nonfluid surface, any orientation (h_i, h_{co}, h_o)

It is assumed that free (or natural) convection will take place whenever the wind speed is less than 0.45 m/s or the surface is enclosed. This is used for h_i and h_{co} for all cases, and for h_o when the wind speed is below 0.45 m/s. Equation (C.5) is based on the vertical wall convection model using constants as presented by Holman [B13].

$$h_{free} = \frac{0.1\left(\left(\frac{g(T_w - T_\infty)L^3}{\nu_{air}^2 T_f}\right)Pr\right)^{1/3} k_{air}}{L} + h_r \qquad \text{(C.5)}$$

where

h_{free} is the effective free convection coefficient (W/m^2·°C),

k_{air} is the thermal conductivity of air evaluated at the mean film temperature (W/m·°C),

L is the characteristic length (m). Defined as

Vertical cylinders: height/2

Horizontal cylinders: diameter/2

Rectangular: height/2

Spherical: diameter/2

g is the acceleration of gravity (m/s^2),

T_w is the wall temperature (°C),

T_∞ is the bulk air temperature (°C),

T_f is the mean film temperature $(T_w - T_\infty)/2$,

ν_{air} is the kinematic viscosity of air evaluated at the mean film temperature (m/s^2),

Pr is the Prandtl number of air at the mean film temperature (dimensionless),

h_r is the radiation component. See Equation (C.7).

 Copyright © 2004 IEEE. All rights reserved.

Copyright The Institute of Electrical and Electronics Engineers, Inc.
Provided by IHS under license with IEEE
No reproduction or networking permitted without license from IHS Not for Resale

C.5.2 Forced convection, any orientation (h_o)

It is assumed that forced convection will take place whenever the wind speed is greater than 0.45 m/s. This is used for h_o when the wind speed is greater than 0.45 m/s. Equation (C.6) is based on the plate model as presented by Becker [B6].

$$h_{forced} = \frac{Pr^{\frac{1}{3}}\left(\left(0.037\frac{VL}{v_{air}}\right)^{0.8} - 871\right)k_{air}}{L} + h_r \quad \text{(C.6)}$$

where

h_{forced} is the effective forced convection coefficient (W/m^2·°C),
k_{air} is the thermal conductivity of air evaluated at the mean film temperature (W/m·°C),
L is the characteristic length (m). Defined as
Vertical cylinders (height + diameter)/2
Horizontal cylinders: (length + diameter)/2
Rectangular: (length + width)/2
Spherical: diameter/2
V is the wind velocity (m/s),
ν_{air} is the kinematic viscosity of air evaluated at the mean film temperature (m/s^2),
Pr is the Prandtl number of air at the mean film temperature (dimensionless),
h_r is the radiation component. See Equation (C.7).

C.5.3 Radiation component, all coefficients (h_f, h_i, h_{co}, h_o)

Heat transfer from radiation is added to the pure convection value to arrive at an effective convection coefficient. The simplified equation for radiation, as presented in Equation (B.10), is used.

$$h_r = 4\sigma\varepsilon T_m^3 \quad \text{(C.7)}$$

where

h_r is the linearized radiation heat-transfer coefficient (W/m^2·°C)
σ is 5.669·10^{-8} (W/m^2·K^4), the Stefan-Boltzmann constant,
ε emissivity of radiating surface (dimensionless),
T_m is the estimated mean absolute temperature between the surroundings and the radiating surface (K).

$$T_m = T_0 + \frac{T_1 + T_2}{2} \quad \text{(C.8)}$$

where

T_1 is the surface temperature of cylinder (°C),
T_0 is the 273 °C, constant converting temperature (°C) to absolute temperature (K),
T_2 is the temperature of media surrounding the cylinder (°C).

Copyright © 2004 IEEE. All rights reserved.

Copyright The Institute of Electrical and Electronics Engineers, Inc.
Provided by IHS under license with IEEE
No reproduction or networking permitted without license from IHS Not for Resale

Annex D

(informative)

Heat-up considerations

In certain plant operations, it may be necessary to specify that the heat-tracing system be capable of raising the temperature of a stagnant product to pumping temperature within a certain time period. Equation (D.1) gives the relationship between heat-up time and heating device input for a pipe.

$$t = H \cdot \ln\left(\frac{q_c - U(T_i - T_a)}{q_c - U(T_f - T_a)}\right) + \frac{P_1 \cdot V_{c1} \cdot h_f}{q_c - U(T_{sc} - T_a)} \quad \text{(D.1)}$$

where

U is the heat loss per unit length of pipe per degree of temperature difference. Equation (D.2) is derived from Equation (B.1).

$$U = \frac{1}{\frac{1}{\pi \cdot D_1 \cdot h_i} + \frac{\ln(D_2/D_1)}{2 \cdot \pi \cdot K_1} + \frac{\ln(D_3/D_2)}{2 \cdot \pi \cdot K_2} + \frac{1}{\pi \cdot D_3 \cdot h_{co}} + \frac{1}{\pi \cdot D_3 \cdot h_o}} \quad \text{(D.2)}$$

where

H is the thermal time constant, which is the total energy stored in the mass of pipe, fluid, and insulation per degree of temperature divided by the heat loss per unit length per degree temperature differential [see Equation (D.3)].

$$H = \frac{P_1 \cdot C_{p1} \cdot V_{c1} + P_2 \cdot C_{p2} \cdot V_{c2} + 0.5 \cdot P_3 \cdot C_{p3} \cdot V_{c3}}{U} \quad \text{(D.3)}$$

and

P_1 is the density of product in pipe (kg/m^3),

C_{p1} is the specific heat of the product (J/kg·°C),

V_{c1} is the internal volume of pipe (m^3/m),

P_2 is the density of pipe (kg/m^3),

C_{p2} is the specific heat of the pipe (J/kg·°C),

V_{c2} is the pipe wall volume (m^3/m),

P_3 is the density of insulation (kg/m^3),

C_{p3} is the specific heat of the insulation (J/kg·°C),

V_{c3} is the insulation wall volume (m^3/m),

T_i is the initial temperature of the pipe (°C),

Copyright © 2004 IEEE. All rights reserved.
--`,,`-`-`,,`,,`,`,,`---
Copyright The Institute of Electrical and Electronics Engineers, Inc.
Provided by IHS under license with IEEE
No reproduction or networking permitted without license from IHS
Not for Resale

T_f is the final temperature of the fluid and pipe (°C),

T_a is the ambient temperature (°C),

t is the desired heat-up time (s),

U is the heat loss per unit length of pipe per degree of temperature (W/m·°C),

H is the thermal time constant (s),

K_1 is the thermal conductivity of the inner insulation evaluated at its mean temperature (W/m·°C),

K_2 is the thermal conductivity of the outer insulation evaluated at its mean temperature (W/m·°C),

D_3 is the outside diameter of outer insulation layer (m),

D_2 is the outside diameter of the inner insulation layer (m),

D_1 is the inside diameter of the insulation layer (m),

h_{co} is the inside air contact coefficient of the weather barrier (W/m^2·°C),

h_o is the outside air contact coefficient of the weather barrier to the ambient (W/m^2·°C),

h_i is the inside air contact coefficient from the pipe to the inside insulation surface (W/m^2·°C),

T_{sc} is the temperature at which phase change occurs (°C),

h_f is the latent heat of fusion for the product (J/kg),

q_c is the heating cable output (W/m).

The preceding relationships also assume that system densities, volumes, thermal conductivities, and heat losses are constant over the temperature range of interest. Note that some products do not undergo a phase change during heat-up. Although the model is representative of a straight pipeline, it does not have provisions for equipment such as pumps and valves.

Copyright © 2004 IEEE. All rights reserved.

Copyright The Institute of Electrical and Electronics Engineers, Inc.
Provided by IHS under license with IEEE
No reproduction or networking permitted without license from IHS Not for Resale

Annex E

(informative)

Method to determine equivalent thicknesses of insulating cements

Given: A pipe insulated with 25.4 mm (actual thickness) mineral wool having a thermal conductivity of 0.0447 W/ m·°C at 37.8 °C mean temperature.

Find: The proper thickness of the insulating cement that has been reported by the manufacturer to have a thermal conductivity of 0.0706 W/m·°C at 37.8 °C mean temperature.

Solution, as shown in Equation (E.1):

$$\frac{K_{\text{ins}}}{K_{\text{cement}}} = \frac{t_{\text{ins}}}{t_{\text{cement}}} \tag{E.1}$$

$$\frac{0.0447}{0.0706} = \frac{25.4}{t_{\text{cement}}}$$

$$t_{\text{cement}} = 40.1 \text{ mm}$$

Copyright © 2004 IEEE. All rights reserved.

Copyright The Institute of Electrical and Electronics Engineers, Inc.
Provided by IHS under license with IEEE
No reproduction or networking permitted without license from IHS Not for Resale

Annex F

(informative)

Type test matrix for Clause 4

Table F.1—Applicable heater cable and surface heating device tests by installation location

Type test	Subclause	Cl. I, D1	Cl. II & III, D1	Cl. I, D2	Cl. II & III, D2	Cl. I, Z1	Cl. I, Z2	Unclassified (ordinary)
Dielectric	4.1.1	X	X	X	X	X	X	X
Insulation resistance	4.1.2	X	X	X	X	X	X	X
Water resistance	4.1.3	X	X	X	X	X	X	X
Elevated temp. dielectric	4.1.5	X	X	X	X	X	X	X
Thermal performance benchmark	4.1.6	X	X	X	X	X	X	X
Deformation	4.1.7			X	X	X	X	X
Impact	4.1.8			X	X	X	X	X
Cold-bend test	4.1.9	X	X	X	X	X	X	X
Flammability test	4.1.10	X	X	X	X	X	X	X
Verify rated output	4.1.11	X	X	X	X	X	X	X
Start-up currents	4.1.12	X	X	X	X	X	X	X
Metallic coverings conductance	4.1.13	X	X	X	X	X	X	X
Sheath temperature, Cl. I, Div. 1	4.3.1.1	X						
Deformation/Impact, Cl. I, Div. 1	4.3.1.2	X						
Chemical exposure	4.3.1.3	X				X		
Sheath temperature, Cl. II, III, Div. 1	4.3.2.1		X					
Deformation/Impact, Cl. II, III, Div. 1	4.3.2.2		X					
Sheath temperature, Cl. I, Div. 2	4.3.3			X				

Copyright © 2004 IEEE. All rights reserved.

--`,,`,,-`-`,,`,,`,`,,`---

Copyright The Institute of Electrical and Electronics Engineers, Inc.
Provided by IHS under license with IEEE
No reproduction or networking permitted without license from IHS
Not for Resale

Table F.1—Applicable heater cable and surface heating device tests by installation location *(continued)*

Type test	Subclause	Cl. I, D1	Cl. II & III, D1	Cl. I, D2	Cl. II & III, D2	Cl. I, Z1	Cl. I, Z2	Unclassified (ordinary)
Sheath temperature, Cl. II and III, Div. 2	4.3.4				X			
Sheath temperature, Cl. I, Zone 1	4.3.5.1					X		
Deformation/Impact, Cl. I, Zone 1	4.3.5.2					X		
Sheath temperature, Cl. I, Zone 2	4.3.6						X	

Table F.2—Applicable tests for heater cable and surface heating device integral components

Type test	Subclause	Cl. I, D1	Cl. II & III, D1	Cl. I, D2	Cl. II & III, D2	Cl. I, Z1	Cl. I, Z2	Unclassified (ordinary)
Dielectric	4.1.1	X	X	X	X	X	X	X
Insulation resistance	4.1.2	X	X	X	X	X	X	X
Integral component water resistance	4.1.4	X	X	X	X	X	X	X
Elevated temperature dielectric	4.1.5	X	X	X	X	X	X	X
Deformation	4.1.7			X	X	X	X	X
Impact	4.1.8			X	X	X	X	X
Cold-bend test[a]	4.1.9	X	X	X	X	X	X	X
Flammability test	4.1.10	X	X	X	X	X	X	X
Deformation/impact, Cl. I, Div. 1	4.3.1.2	X						
Chemical exposure	4.3.1.3	X				X		
Deformation/Impact, Cl. II and III, Div. 1	4.3.2.2		X					
Deformation/Impact, Cl. I, Zone 1	4.3.5.2					X		

[a]Only required for flexible connections, such as a flexible hot-hot connection in the heater.

Copyright © 2004 IEEE. All rights reserved.

Copyright The Institute of Electrical and Electronics Engineers, Inc.
Provided by IHS under license with IEEE
No reproduction or networking permitted without license from IHS
Not for Resale

Annex G

(informative)

Design basic data—Example (see 6.6)

Location		System	Project Number		Reference Drawing(s)
SITE INFORMATION					
Minimum ambient temperature			Design wind speed		
Maximum ambient temperature			Design safety factor		
Installed:	Outdoors	Indoors	Severe (corrosive) environment		
SYSTEM REQUIREMENTS					
Type I (temperature maintained above a minimum point)					
Type II (process maintained within a moderate band)					
Type III (process controlled within a narrow band)					
APPLICATION					
Pipelines	Vessels	Safety showers			
Non-metallic pipe / vessels		Pretraced instrument tubing			
Steam condensate lines (freeze protection)					
Allow spiraling of tracer					
PROCESS INFORMATION					
Material in pipe			Liquid / gas / vapor		
Pipe maintenance temperature			°C		
Normal process operating temperature			°C		
Minimum allowable product temperature			°C		
Maximum allowable product temperature			°C		
Maximum system temperature (from process excursions, steamout, etc.)			°C		
PIPING (VESSEL) SYSTEM					
Pipe (vessel) material			Schedule (thickness)		
Special conditions (lined pipe, etc.)					
Pipe supports method(s)	Direct contact	Outside thermal insulation (preferred)			
THERMAL INSULATION SYSTEM					
Type	Thickness		K-factor / temp		
Maximum exposure temperature	°C		Installed oversized		
Soft insulation used (valves, pumps)					
ELECTRICAL SYSTEM					
Voltage(s) available	Volts	Phase	Hertz		
Electrical area classification		AIT / T-rating			
Determining gas/vapor (lowest AIT)					
Approvals required	CSA/FM/UL	IEC	PE stamped drawings		
SPECIAL PROCESS HEATING CONSIDERATIONS					
Use this section only for heat-up, melt-out, or other special heating requirements.					
Special heating requirement	Heat-up	Melt-out	Other, describe:		
Volume of fluid / solid to be heated		Flowing / nonflowing			
Allowable time to accomplish rise in temperature / change state					
Initial material temperature		Final material temperature			
Temperature when material changes state		Pipe material			
Specific heat	Solid	Liquid	Vapor		
Density	Solid	Liquid	Vapor		
Heat of fusion or vaporization					
Prepared by		Company	Date		
Approved by		Company	Date		
Received by		Company	Date		

Copyright © 2004 IEEE. All rights reserved.

Copyright The Institute of Electrical and Electronics Engineers, Inc.
Provided by IHS under license with IEEE
No reproduction or networking permitted without license from IHS
Not for Resale

Annex H

(informative)

Heater installation record—Example (see 7.2.2)

Location	System	Project number	Reference drawing(s)		
Heater number	Line number	Area classification	AIT / T-classification		
Panel number	Location	Circuit number	Circuit amp / voltage		
Heater manufacturer	Heater model	Heater wattage unit length / voltage rating			
Megohmmeter manufacturer / model		Voltage setting	Accuracy / full scale		
Megohmmeter date of last calibration					
Multimeter manufacturer / model		Ohm setting	Accuracy / full scale		
HEATER TESTING:		Test value / remarks		Date	Initials
		(See Note 1)			
1. Receipt of material on reel					
Continuity test on reel (see Note 2)					
Insulation resistance test on reel					
2. Piping completed (approval to start heater installation)					
3. After installation					
Continuity test (see Note 2)					
Insulation resistance test					
4. Heater installed (approval to start thermal insulation installation)					
Heater correctly installed on pipe, vessel, or equipment					
Heater correctly installed at valves, pipe supports, other heat sinks					
Components correctly installed and terminated (power, tee, end seal)					
Installation agrees with manufacturers instructions and circuit design					
5. Thermal insulation installation complete					
Continuity test (see Note 2)					
Insulation resistance test (5 megohm min)					
SYSTEM INSPECTED:				Date	Initials
6. Tagging and identification complete (panel, field components, pipe decal)					
7. Heater effectively grounded					
8. Temperature controls properly installed and set points verified					
9. Ex-proof seals poured					
10. Thermal insulation weather tight (all penetrations sealed)					
11. End seals, covered splices marked on insulation outer cladding					
12. Drawings, documentation marked as-built					
Performed by		Company		Date	
Witnessed by		Company		Date	
Accepted by		Company		Date	
Approved by		Company		Date	

NOTES
1—Minimum acceptable insulation resistance should be 20 megohms. Minimum acceptable test voltage is 500 Vdc. However, 1000 Vdc recommended for MI, 2500 Vdc for polymeric cables.
2—Continuity test on self-limiting cable only used for short or open circuit.

--`,,`,,`-`-`,,`,,`,`,,`---
Copyright © 2004 IEEE. All rights reserved.

Copyright The Institute of Electrical and Electronics Engineers, Inc.
Provided by IHS under license with IEEE
No reproduction or networking permitted without license from IHS
Not for Resale

Annex I

(informative)

Division 1/Zone 1—Checklist example (see 7.5)

Location	System / Project Number	Reference Drawing(s)	
Circuit ID #	Test Value / Remarks	Date	Initials
Area:			
Ignition temperature			
Group classification			
Heater Circuit:			
Heater type			
Supply voltage			
Circuit length			
Design maximum pipe temperature			
Heater device temp identification number (T-rating)			
Components:			
Power connection			
End seal			
Tee connection			
Splice			
Ground-fault protection			
Make and model			
Ground leakage			
Trip level (ma)			
Installation instructions:			
Correct components per manufacturer's specification			
Seal fittings (when used) opened and inspected (properly poured)			
Ground-leakage device tested			
Insulation resistance testing:			
Instrument used			
Calibration date			
Megohmmeter test voltage (minimum 500 Vdc, recommended 1000 Vdc for MI, 2500 Vdc for polymeric)			
Electrical jacket before thermal insulation installed (minimum value shall be 20 megohms)			
Overjacket before thermal insulation installed (minimum value shall be 20 megohms—Div. 1 only)			
Overjacket after thermal insulation installed (minimum insulation resistance value shall be 20 megohms—Div. 1 only)			

CIRCUIT READY TO COMMISSION

NAME: _____ **SIGNED:** _____
(Print)

COMPANY: _____ **DATE:** _____

Copyright © 2004 IEEE. All rights reserved.

Copyright The Institute of Electrical and Electronics Engineers, Inc.
Provided by IHS under license with IEEE
No reproduction or networking permitted without license from IHS
Not for Resale

Annex J

(informative)

Heater commissioning record—Example (see 7.9)

Location	System	Project number	Reference Drawing(s)				
Heater number	Line number	Area classification	AIT / T-classification				
Panel number	Location	Circuit number	Circuit amp / voltage				
Heater manufacturer	Heater model	Heater wattage unit length / voltage rating					
HEATER INFORMATION:							
Heater total design length		Heater total installed length					
Thermal insulation type		Thermal insulation thickness					
Normal pipe temperature		Maintain pipe temperature					
HEATER TESTING: (refer to heater installation record)							
Electrical resistance (continuity) test in ohms (see Note 1)							
Electrical insulation resistance test in megohms							
Test ambient temperature							
PERFORMANCE DATA:	Volts ac		Current in amperes				
	Panel	Field	1 phase	3 phase			
			Line	A phase	B phase	C phase	Neutral
After 5 min							
Ambient temperature at time of test							
Pipe temperature at time of test							
Calculated watts per unit length (volt × amp / length)							
TEMPERATURE CONTROL: type							
Heating controller	Ambient sensing	Pipe sensing	Temperature set point				
High-limit Controller	Type	Location	Temperature set point				
Heating controls calibrated							
Heating controls operation verified							
ALARMS / MONITORING: type							
Temperature	High setting	Low setting	Operation verified				
Heater current	High setting	Low setting	Operation verified				
Ground-fault current		Setting	Operation verified				
Loss of voltage			Operation verified				
Other			Operation verified				
GROUND-FAULT PROTECTION: type							
Setting	Measured current	Tested for operation					
Performed by		Company	Date				
Witnessed by		Company	Date				
Accepted by		Company	Date				
Approved by		Company	Date				
Note 1—Continuity of self-limiting cable only used for short or open circuit.							

Copyright © 2004 IEEE. All rights reserved.

Copyright The Institute of Electrical and Electronics Engineers, Inc.
Provided by IHS under license with IEEE
No reproduction or networking permitted without license from IHS
Not for Resale

Annex K

(informative)

Maintenance log record—Example (see 8.5.3)

Location	System	Reference drawing(s)

CIRCUIT INFORMATION		
Heater cat no.	Circuit length	Bkr. panel no
Power connection	Design voltage	Bkr. pole(s) no.
Tee connection	Ground-fault protection (type)	
Splice connection	Ground-fault trip setting:	
Heating controller		

VISUAL							
Panel Number	Circuit #						
	Date						
	Initial						
Thermal insulation							
Damaged insulation/lagging							
Water seal good							
Insulation / lagging missing							
Presence of moisture							
Heating system components							
Enclosures, boxes sealed							
Presence of moisture							
Signs of corrosion							
Heater lead discoloration							
Heating and/or high-limit controller							
Operating properly							
Controller set point							

ELECTRICAL							
Insulation resistance testing (bypass controller if applicable)							
Test voltage							
Megger value							
Heater supply voltage							
Value at power source							
Value at field connection							
Heater circuit current reading							
Amps reading at 5 min							
Pipe temp for current reading							
Ground-fault current							

Comments and Actions:							

Performed by	Company	Date
Approved by	Company	Date

Copyright © 2004 IEEE. All rights reserved.

Copyright The Institute of Electrical and Electronics Engineers, Inc.
Provided by IHS under license with IEEE
No reproduction or networking permitted without license from IHS
Not for Resale

Copyright © 2004 IEEE. All rights reserved.

Copyright The Institute of Electrical and Electronics Engineers, Inc.
Provided by IHS under license with IEEE
No reproduction or networking permitted without license from IHS

Not for Resale