IEEE Standards

IEEE Std 45™-2002
(Revision of IEEE Std 45-1998)

45™

IEEE Recommended Practice for Electrical Installations on Shipboard

IEEE Industry Applications Society

Sponsored by the
International Marine Industry Committee

IEEE

Published by
The Institute of Electrical and Electronics Engineers, Inc.
3 Park Avenue, New York, NY 10016-5997, USA

11 October 2002

Print: SH95035
PDF: SS95035

Copyright The Institute of Electrical and Electronics Engineers, Inc.
Provided by IHS under license with IEEE
No reproduction or networking permitted without license from IHS

Not for Resale

IEEE Std 45™-2002
(Revision of
IEEE Std 45-1998)

IEEE Recommended Practice for Electrical Installations on Shipboard

Sponsor

International Marine Industry Committee
of the
IEEE Industry Applications Society

Approved 12 September 2002

IEEE-SA Standards Board

Abstract: Recommendations for the design, selection, and installation of equipment on merchant vessels with electrical apparatus for lighting, signaling, communication, power, and propulsion are provided.
Keywords: marine electrical engineering, marine vessels, shipboard systems, ships

The Institute of Electrical and Electronics Engineers, Inc.
3 Park Avenue, New York, NY 10016-5997, USA

Copyright © 2002 by the Institute of Electrical and Electronics Engineers, Inc.
All rights reserved. Published 11 October 2002. Printed in the United States of America.

"National Electrical Code" and "NEC" are both registered trademarks owned by the National Fire Protection Association, Inc.

Print: ISBN 0-7381-3381-7 SH95035
PDF: ISBN 0-7381-3382-5 SS95035

No part of this publication may be reproduced in any form, in an electronic retrieval system or otherwise, without the prior written permission of the publisher.

Copyright The Institute of Electrical and Electronics Engineers, Inc.
Provided by IHS under license with IEEE
No reproduction or networking permitted without license from IHS Not for Resale

IEEE Standards documents are developed within the IEEE Societies and the Standards Coordinating Committees of the IEEE Standards Association (IEEE-SA) Standards Board. The IEEE develops its standards through a consensus development process, approved by the American National Standards Institute, which brings together volunteers representing varied viewpoints and interests to achieve the final product. Volunteers are not necessarily members of the Institute and serve without compensation. While the IEEE administers the process and establishes rules to promote fairness in the consensus development process, the IEEE does not independently evaluate, test, or verify the accuracy of any of the information contained in its standards.

Use of an IEEE Standard is wholly voluntary. The IEEE disclaims liability for any personal injury, property or other damage, of any nature whatsoever, whether special, indirect, consequential, or compensatory, directly or indirectly resulting from the publication, use of, or reliance upon this, or any other IEEE Standard document.

The IEEE does not warrant or represent the accuracy or content of the material contained herein, and expressly disclaims any express or implied warranty, including any implied warranty of merchantability or fitness for a specific purpose, or that the use of the material contained herein is free from patent infringement. IEEE Standards documents are supplied "**AS IS**."

The existence of an IEEE Standard does not imply that there are no other ways to produce, test, measure, purchase, market, or provide other goods and services related to the scope of the IEEE Standard. Furthermore, the viewpoint expressed at the time a standard is approved and issued is subject to change brought about through developments in the state of the art and comments received from users of the standard. Every IEEE Standard is subjected to review at least every five years for revision or reaffirmation. When a document is more than five years old and has not been reaffirmed, it is reasonable to conclude that its contents, although still of some value, do not wholly reflect the present state of the art. Users are cautioned to check to determine that they have the latest edition of any IEEE Standard.

In publishing and making this document available, the IEEE is not suggesting or rendering professional or other services for, or on behalf of, any person or entity. Nor is the IEEE undertaking to perform any duty owed by any other person or entity to another. Any person utilizing this, and any other IEEE Standards document, should rely upon the advice of a competent professional in determining the exercise of reasonable care in any given circumstances.

Interpretations: Occasionally questions may arise regarding the meaning of portions of standards as they relate to specific applications. When the need for interpretations is brought to the attention of IEEE, the Institute will initiate action to prepare appropriate responses. Since IEEE Standards represent a consensus of concerned interests, it is important to ensure that any interpretation has also received the concurrence of a balance of interests. For this reason, IEEE and the members of its societies and Standards Coordinating Committees are not able to provide an instant response to interpretation requests except in those cases where the matter has previously received formal consideration.

Comments for revision of IEEE Standards are welcome from any interested party, regardless of membership affiliation with IEEE. Suggestions for changes in documents should be in the form of a proposed change of text, together with appropriate supporting comments. Comments on standards and requests for interpretations should be addressed to:

Secretary, IEEE-SA Standards Board
445 Hoes Lane
P.O. Box 1331
Piscataway, NJ 08855-1331
USA

Note: Attention is called to the possibility that implementation of this standard may require use of subject matter covered by patent rights. By publication of this standard, no position is taken with respect to the existence or validity of any patent rights in connection therewith. The IEEE shall not be responsible for identifying patents for which a license may be required by an IEEE standard or for conducting inquiries into the legal validity or scope of those patents that are brought to its attention.

Authorization to photocopy portions of any individual standard for internal or personal use is granted by the Institute of Electrical and Electronics Engineers, Inc., provided that the appropriate fee is paid to Copyright Clearance Center. To arrange for payment of licensing fee, please contact Copyright Clearance Center, Customer Service, 222 Rosewood Drive, Danvers, MA 01923 USA; +1 978 750 8400. Permission to photocopy portions of any individual standard for educational classroom use can also be obtained through the Copyright Clearance Center.

--`,,`,,`-`-`,,`,,`,`,,`---

Copyright The Institute of Electrical and Electronics Engineers, Inc.
Provided by IHS under license with IEEE
No reproduction or networking permitted without license from IHS Not for Resale

Introduction

(This introduction is not part of IEEE Std 45-2002, IEEE Recommended Practice for Electrical Installations on Shipboard.)

IEEE Std 45-2002, IEEE Recommended Practice for Electrical Installations on Shipboard, constitutes the chief undertaking of the Marine Transportation Committee of the IEEE Industry Applications Society.

As an IEEE recommended practice, this document provides procedures preferred by IEEE. Following the procedures in this recommended practice does not guarantee safety, and users should take all the reasonable, independent steps necessary to minimize risks to safety.

Due to the differences among the requirements of the various classification societies and the insurance companies regarding electrical installations on shipboard, and the lack of any accepted standard engineering regarding electrical installations on shipboard, and the lack of any accepted standard engineering practice for marine installations, the AIEE[a] in 1913 appointed the Marine Committee (now called Marine Transportation Committee) to take up the preparation of standard marine rules. The first edition was prepared covering two important divisions; namely, fire protection requirements and marine construction requirements. They were adopted by the American Bureau of Shipping and published as Section 37 of their Rules for the building and classing of vessels. As the first edition of the rules did not cover the entire field of use of electricity on shipboard, the Marine Committee of the Institute was continued. The recommendations were considerably amplified in the editions issued in 1920, 1927, 1930, 1938, 1940, 1945, 1948, 1951, 1955, 1958, 1962, 1967, 1971, 1977, 1983, and 1998.

This edition updates the 1998 edition. The standard has been reorganized to eliminate duplications and make it easier to use. It includes many significant additions, changes, and deletions to reflect North American and International marine electrical engineering technology and the latest system design, installation, and test practices necessary to ensure safe and reliable operation.

[a]In 1963 the American Institute of Electrical Engineers (AIEE) merged with the Institute of Radio Engineers (IRE) to become the Institute of Electrical and Electronics Engineers, Inc. (IEEE).

Copyright © 2002 IEEE. All rights reserved.

Copyright The Institute of Electrical and Electronics Engineers, Inc.
Provided by IHS under license with IEEE
No reproduction or networking permitted without license from IHS
Not for Resale

The following is a list of participants in the International Marine Industry Committee of the IEEE Industry Applications Society.

H. R. Stewart, *Chair*
David N. Bishop, Vice *Chair*
Sue Vogel, Secretary

Edward Aberbach
Chris Adams
Alf Kare Adnanes
Chuck Barlow
Scott Barnes
David N. Bishop
Rudy Bright
David B. Burns
Jerry A. Cincotta
William Colavecchio
Richard J. Collins
Walter Constantine
Harry Conte
James Cospolich
John Croston
Warren Cully
Charles A. Darnell
Donald Davis
Brian S. Ensign
Ronald Essigmann
Thomas Feil
Jeffrey J. Gleason
Joan Grande-Butera
Thomas Guida
James Hail
Leonard Haim
Marcelo Hirschler
Erik Hoffmann
George F. Hull III
Mohammed Islam
William Jones
Henning Karlsen
Philip Laudicina
George Mahl
Michal Maier
Thomas Martin
Per Martinsen
Michael Mayfield
Gerard Maz
David C. O'Donnell
Robert Philibert
Dieter Popoff
David T. Dunn
Nancy Robinson
Frank H. Rocchio
Dan Rodriguez
John Rosata
James A. Ruggieri
Gary L. Savage
Brian P. Sharman
David R. Stewart
H. R. Stewart
Francis Stone
Frank Vasser
Donald A. Voltz
Larry A. Wilkerson
John E. Winbery

The following members of the balloting committee voted on this standard. Balloters may have voted for approval, disapproval, or abstention.

Ed Aberbach
Chris Adams
Alf Kare Adnanes
Paul Anderson
Scott Barnes
David N. Bishop
Frederick Bried
Rudy Bright
Robert Brown
Dave Burns
Walter Constantine
James Cospolich
Guru Dutt Dhingra
James Daly
Charles A. Darnell
Donald Davis
Frank DeWinter
Marcus O. Durham
Ronald Essigmann
Travis Griffith
Leonard Haim
Paul Hamer
Marcelo Hirschler
Richard Hulett
Mohammed Islam
Ben Johnson
William Jones
Stephen H. Kerr
Royce King
Philip Laudicina
Michal Maier
Wayne Madden
George Mahl
John Malinowski
David O'Donnell
Lorraine Padden
Gene Pecora
Robert Philibert
Dieter Popoff
Frank H. Rocchio
James A. Ruggieri
Chet Sandberg
Vincent Saporita
David R. Stewart
H. R. Stewart
Francis Stone
Frank Vasser
Donald Voltz
William D. Wilkens
John E Winberry

--`,,`-`-`,,`,,`,`,,`---
Copyright © 2002 IEEE. All rights reserved.

Copyright The Institute of Electrical and Electronics Engineers, Inc.
Provided by IHS under license with IEEE
No reproduction or networking permitted without license from IHS
Not for Resale

When the IEEE-SA Standards Board approved this standard on 12 September 2002, it had the following membership:

James T. Carlo, *Chair*
James H. Gurney, *Vice Chair*
Judith Gorman, *Secretary*

Sid Bennett
H. Stephen Berger
Clyde R. Camp
Richard DeBlasio
Harold E. Epstein
Julian Forster*
Howard M. Frazier
Toshio Fukuda
Arnold M. Greenspan
Raymond Hapeman
Donald M. Heirman
Richard H. Hulett
Lowell G. Johnson
Joseph L. Koepfinger*
Peter H. Lips
Nader Mehravari
Daleep C. Mohla
William J. Moylan
Malcolm V. Thaden
Geoffrey O. Thompson
Howard L. Wolfman
Don Wright

*Member Emeritus

Also included is the following nonvoting IEEE-SA Standards Board liaison:

Alan Cookson, *NIST Representative*
Satish K. Aggarwal, *NRC Representative*

Don Messina
IEEE Standards Project Editor

Copyright © 2002 IEEE. All rights reserved.

Copyright The Institute of Electrical and Electronics Engineers, Inc.
Provided by IHS under license with IEEE
No reproduction or networking permitted without license from IHS
Not for Resale

Contents

1. Overview 1

1.1 Scope 1
1.2 Purpose 1
1.3 Vessel classification 1
1.4 Documentation 2
1.5 Environmental conditions 3
1.6 Equipment construction, testing, and certification 4
1.7 Application of various national and international standards 4
1.8 Materials 4
1.9 Brittle material 5

2. References 5

3. Definitions 9

3.1 General 9
3.2 Cable installation 12
3.3 Generators 12
3.4 Motors 13
3.5 Converters 15
3.6 Rotating machine ventilation 15
3.7 Equipment enclosures 16
3.8 Control apparatus and switchgear 17
3.9 Insulation system 19
3.10 Types of circuits and terms 19
3.11 Automatic or centralized control systems 21

4. Power system characteristics 22

4.1 Standard systems 22
4.2 Standard voltages 22
4.3 Standard frequency 22
4.4 Selection of voltage and system type 22
4.5 AC power system characteristics 23
4.6 Power quality and harmonics 27

5. Power system design 27

5.1 General 27
5.2 Circuit elements 32
5.3 Shore power 32
5.4 Demand factors 32
5.5 Voltage drop 33
5.6 Lighting distribution 33
5.7 Distribution for power equipment 35
5.8 Branch circuits 35
5.9 System protection 37
5.10 Lightning protection 48

Copyright © 2002 IEEE. All rights reserved.

Copyright The Institute of Electrical and Electronics Engineers, Inc.
Provided by IHS under license with IEEE
No reproduction or networking permitted without license from IHS

Not for Resale

6. Emergency power systems 49

6.1 General 49
6.2 Emergency generators 49
6.3 Emergency storage battery 50
6.4 Emergency power distribution system 51
6.5 Emergency switchboard configuration 52
6.6 Temporary emergency power 52
6.7 Temporary emergency circuits 53
6.8 Final emergency circuits 53
6.9 Time factor for supply of emergency power: 54
6.10 Cargo vessels 54
6.11 Passenger vessels (ocean and coastwise) 55
6.12 Passenger vessels (coastal and inland waters) 55
6.13 Passenger vessels (other) 55
6.14 Passenger vessels with RO-RO (roll on-roll off) cargo spaces 55
6.15 Passenger vessels without an independent emergency source of power 56

7. Electric power generation 56

7.1 General 56
7.2 Installation and location 56
7.3 Prime movers 57
7.4 Generators 61
7.5 Generator metering and protection—general 67
7.6 Minimum equipment for ac generator switchboard 69

8. Switchboards 71

8.1 Switchboard arrangement criteria 71
8.2 Installation and location 72
8.3 Low-voltage switchboards (600 V ac and less for ANSI; 1000 V ac and less for IEC)—description and requirements 74
8.4 Medium-voltage switchboards (0.601–38.0 kV ac for ANSI and 1.01–35.0 kV ac for IEC)—description and requirements 75
8.5 Switchboards—application requirements 76
8.6 Circuit breakers—application 77
8.7 Temperatures 77
8.8 Arrangement of switchboard equipment 77
8.9 Overload and short-circuit protection 78
8.10 Switchboard phase and ground bus 79
8.11 Terminations 80
8.12 Wire and conductor terminal lugs 80
8.13 Nameplates 81
8.14 Switchboard testing 81

9. Control systems 81

9.1 General 81
9.2 Documentation 82
9.3 Control system design—general 83
9.4 Control system equipment location 83
9.5 Machinery control 84
9.6 System design characteristics 86

Copyright © 2002 IEEE. All rights reserved.

Copyright The Institute of Electrical and Electronics Engineers, Inc.
Provided by IHS under license with IEEE
No reproduction or networking permitted without license from IHS
Not for Resale

9.7 Control system power supply 86
9.8 Continuity of power 86
9.9 Communication systems 86
9.10 Alarms 87
9.11 Control cabling 88
9.12 Control power distribution 88
9.13 Hazardous location considerations 88
9.14 Control system testing 88
9.15 Maintenance philosophy and design 89
9.16 Control system sensors 89
9.17 Control system programming 89
9.18 Design considerations 90
9.19 Instrumentation 91
9.20 Environmental conditions 91
9.21 Control system voltage and frequency 95
9.22 Electromagnetic frequency 95
9.23 Equipment enclosures 95
9.24 Control console design—general 95
9.25 Control console components 96
9.26 Meters and gauges 96
9.27 Control devices 96
9.28 Ergonomics (human factors) 97
9.29 Identification and marking 98
9.30 Ventilation 99
9.31 Sealing 99
9.32 Environmental monitoring 99

10. Control apparatus 99

10.1 General 99
10.2 Installation and location 100
10.3 Types 100
10.4 Protecting cases 101
10.5 Disconnecting means 102
10.6 Manual starters and controllers 102
10.7 Magnetic starters and controllers 102
10.8 Solid-state starters and controllers 103
10.9 Medium voltage controllers 103
10.10 Pushbuttons 104
10.11 Resistors 104
10.12 Circuit breakers 104
10.13 Knife blade switches and contacts 104
10.14 Corrosion-resistant parts 104
10.15 Nameplates 105
10.16 Tests 105
10.17 Limits of temperature rises 105
10.18 Insulation-voltage test 106
10.19 General requirements for contactors 107
10.20 Rectifiers 107

11. Control application 110

11.1 General 110
11.2 Deck machinery 111

Copyright © 2002 IEEE. All rights reserved.

Copyright The Institute of Electrical and Electronics Engineers, Inc.
Provided by IHS under license with IEEE
No reproduction or networking permitted without license from IHS
Not for Resale

11.3 Ventilation fans ... 113
11.4 Galley, laundry, workshop, print shop, and similar spaces ... 113
11.5 Machinery space auxiliaries ... 113
11.6 Air compressor ... 113
11.7 Remote stopping systems ... 113

12. Transformers ... 114

12.1 General ... 114
12.2 Installation and location ... 115
12.3 Type, number, and rating ... 115
12.4 Voltage regulation ... 115
12.5 Parallel operation ... 115
12.6 Temperature rise ... 115
12.7 Terminals and connections ... 115
12.8 Nameplates ... 116

13. Motors ... 116

13.1 General application ... 116
13.2 AC and dc motors—general ... 117
13.3 Selection ... 117
13.4 Installation and location ... 118
13.5 Insulation of windings ... 118
13.6 Locked rotor kVA ... 118
13.7 Efficiency ... 119
13.8 Lubrication ... 119
13.9 Terminal arrangements ... 119
13.10 Corrosion-resistance parts ... 120
13.11 Nameplates ... 120
13.12 Ambient temperature ... 120
13.13 Limits of temperature rise ... 120
13.14 Insulation tests ... 121
13.15 Insulation resistance ... 121
13.16 Tests ... 122
13.17 Temperature-rise test ... 122
13.18 Insulation resistance test ... 122
13.19 High-potential test ... 122
13.20 Overload test ... 123
13.21 Commutation test ... 123

14. Motor application—general ... 124

14.1 General ... 124
14.2 Duty rating ... 125
14.3 Steering gear motors ... 126

15. Brakes ... 126

15.1 Types ... 126
15.2 AC brakes ... 126
15.3 DC brakes ... 126
15.4 Accessibility ... 126
15.5 Enclosures ... 126

Copyright © 2002 IEEE. All rights reserved.

Copyright The Institute of Electrical and Electronics Engineers, Inc.
Provided by IHS under license with IEEE
No reproduction or networking permitted without license from IHS
Not for Resale

15.6 Construction ... 127
15.7 Tests ... 127
15.8 Brake application ... 128

16. Magnetic friction clutches ... 128

16.1 General ... 128
16.2 Tests ... 128

17. Distribution equipment ... 129

17.1 Distribution panels ... 129
17.2 Circuit breakers ... 129
17.3 Wire lugs and connectors ... 129
17.4 Feeder box fittings ... 130
17.5 Branch box fittings ... 130
17.6 Connection box fittings ... 130
17.7 Shore connection boxes ... 130
17.8 Feeder, branch, and connection boxes ... 131
17.9 Receptacles, plugs, and switches—nonwatertight ... 132
17.10 Receptacles, plugs, and switches other than nonwatertight ... 134
17.11 Terminal and stuffing tubes ... 135
17.12 Multicable penetrators ... 135
17.13 Bolts, taps, and so on ... 135
17.14 Power factor correction capacitors ... 135

18. Heating equipment ... 136

18.1 General ... 136
18.2 Temperature and tests ... 137
18.3 Nameplates ... 137

19. Galley equipment ... 138

19.1 Electric cooking equipment ... 138
19.2 Testing ... 141
19.3 Motor-driven equipment ... 141
19.4 Nameplates ... 142

20. Lighting equipment ... 142

20.1 General ... 142
20.2 Location ... 143
20.3 Provisions for portable lighting ... 143
20.4 Permanent watertight fixtures ... 143
20.5 Permanent nonwatertight fixtures ... 143
20.6 High-intensity discharge lamp fixtures ... 143
20.7 Lighting for hazardous locations ... 144
20.8 Illumination ... 144
20.9 Searchlights ... 144
20.10 Emergency lighting ... 145
20.11 Nameplates ... 145

Copyright © 2002 IEEE. All rights reserved.

Copyright The Institute of Electrical and Electronics Engineers, Inc.
Provided by IHS under license with IEEE
No reproduction or networking permitted without license from IHS
Not for Resale

21. Navigation lights and signals 145

21.1 General 145
21.2 Navigation lights 146
21.3 Signaling lights 146
21.4 Navigation light indicator panel 146
21.5 Whistle and siren control systems 147

22. Storage batteries 148

22.1 General 148
22.2 Recommendations 148
22.3 Specific applications 148
22.4 Type of batteries 149
22.5 Selection and assembly 151
22.6 Installation and arrangement 151
22.7 Ventilation 154
22.8 Cables 155
22.9 Battery rating 156
22.10 Charging facilities 156
22.11 Overload protection 156

23. Cables types for installation on shipboard 157

23.1 Marine Shipboard Cable 157
23.2 Navy cable 158
23.3 Other shipboard cables 158
23.4 MI cable 158
23.5 Specialty cables 158

24. Cable application 158

24.1 General 158
24.2 Distribution cables (600/1000 V) 159
24.3 Distribution cables (medium voltage, 2000 V to 35 000 V) 159
24.4 Control cables (600/1000 V) 159
24.5 Signal cables (300 V, 600/1000 V) 159
24.6 Special service requirements 159
24.7 AC applications 160
24.8 Ampacities 160
24.9 Ambient temperatures 168
24.10 Armored cables 168
24.11 Skin effect ratio 168
24.12 Circuits in the vicinity of magnetic compass 169

25. Cable installation 170

25.1 Single-conductor ac cables 170
25.2 Cable continuity and grounding 170
25.3 Cable locations 171
25.4 Cable protection 171
25.5 Cable support and retention 171
25.6 Cables—radius of bends 172
25.7 Cables through bulkheads, docks, beams, and so on 172

--`,,`-`-`,,`,,`,`,,`---

Copyright © 2002 IEEE. All rights reserved.

Copyright The Institute of Electrical and Electronics Engineers, Inc.
Provided by IHS under license with IEEE
No reproduction or networking permitted without license from IHS

Not for Resale

25.8 Cable pulling in force ... 172
25.9 Cable rat proofing ... 173
25.10 Holes for cables ... 173
25.11 Cable splicing ... 173
25.12 Propulsion cables ... 174

26. Interior communications systems ... 174

26.1 General ... 174
26.2 Engine order telegraph system ... 175
26.3 Rudder angle indicator ... 176
26.4 Refrigerated and cold storage alarm system ... 177
26.5 General emergency alarm system ... 177
26.6 Alarm system for lubricating oils, refrigeration, and other fluid systems ... 182
26.7 Voice communication systems ... 182

27. Exterior communication and navigation systems ... 187

27.1 General ... 187
27.2 Safety ... 187
27.3 General installation guidelines ... 188
27.4 Power supplies ... 188
27.5 Radio interference ... 189
27.6 Antennas ... 189
27.7 Equipment installation guidelines ... 189

28. Fire detection, alarm, and sprinkler systems ... 190

28.1 General ... 191
28.2 Manual fire alarm systems ... 191
28.3 Automatic fire alarm systems ... 191
28.4 Fire detection and fire alarm system for periodically unattended machinery spaces ... 192
28.5 Smoke extraction systems ... 192
28.6 Detector types ... 193
28.7 Automatic sprinkler, fire detection, and fire alarm systems ... 193

29. Watertight and fire door equipment ... 194

29.1 General ... 194
29.2 Watertight door systems ... 194
29.3 Fire door holding and release systems ... 196

30. Gyro compass systems ... 197

30.1 General ... 197
30.2 Installation and location ... 197
30.3 Power supply ... 198

31. Electric propulsion and maneuvering system ... 198

31.1 Scope ... 198
31.2 Regulations ... 198
31.3 System requirements ... 198
31.4 Prime movers for integrated power and propulsion plants ... 200

--`,,`-`-`,,`,,`,`,,`---
Copyright © 2002 IEEE. All rights reserved.

Copyright The Institute of Electrical and Electronics Engineers, Inc.
Provided by IHS under license with IEEE
No reproduction or networking permitted without license from IHS
Not for Resale

31.5 Generators for integrated power and propulsion plants ... 200
31.6 Propulsion drive transformers ... 202
31.7 Propulsion motors ... 204
31.8 Propulsion power conversion equipment ... 206
31.9 Main power switchboard ... 207
31.10 Propulsion control equipment ... 207
31.11 Power management ... 210
31.12 Failure mode and effect analysis (FMEA) ... 210
31.13 Podded propulsion ... 210
31.14 Propulsion cables ... 211
31.15 Tests ... 211
31.16 Propulsion equipment location ... 212
31.17 Ventilation ... 212
31.18 Bed-plates and foundations ... 212
31.19 Lubrication ... 213
31.20 Fire extinguishers ... 213
31.21 Protection during storage and installation ... 213
31.22 System operation and maintenance ... 213

32. Steering systems ... 214

32.1 General ... 214
32.2 Navigating bridge installation ... 215
32.3 Power supply ... 215
32.4 Alarm system ... 215
32.5 Steering gear ... 215
32.6 Steering control systems ... 216

33. Hazardous locations, installations, and equipment ... 218

33.1 General ... 218
33.2 Hazardous area classification ... 219
33.3 Area classification for various vessel types ... 220
33.4 Hazardous location equipment ... 223
33.5 Hazardous location equipment markings ... 224
33.6 Approved equipment ... 225
33.7 Wiring methods—hazardous locations ... 226
33.8 Additional recommendations for tank vessels carrying bulk liquefied gas or ammonia ... 228

34. Ship tests ... 228

34.1 General ... 228
34.2 New installations ... 230
34.3 Generating sets ... 230
34.4 Switchboards ... 230
34.5 Motors and controllers ... 231
34.6 Lighting ... 232
34.7 Communication systems ... 232
34.8 Steering system ... 232
34.9 Control systems ... 232
34.10 Emergency electrical systems ... 233
34.11 Storage batteries ... 233
34.12 Electric heating systems ... 233

Copyright © 2002 IEEE. All rights reserved.

Copyright The Institute of Electrical and Electronics Engineers, Inc.
Provided by IHS under license with IEEE
No reproduction or networking permitted without license from IHS
Not for Resale

34.13 Voltage drop 233
34.14 Existing installations 233

35. Spare Parts 235

Annex A (informative) General information on hazardous location classification and equipment 236
Annex B (informative) Circuit designations 243
Annex C (informative) Enclosures NEMA and IEC characteristics, designations, and comparison 247
Annex D (informative) Bibliography 255

Copyright © 2002 IEEE. All rights reserved.

Copyright The Institute of Electrical and Electronics Engineers, Inc.
Provided by IHS under license with IEEE
No reproduction or networking permitted without license from IHS
Not for Resale

IEEE Recommended Practice for Electrical Installations on Shipboard

1. Overview

1.1 Scope

These recommendations establish the minimally acceptable guidelines for the design, selection, and installation of systems and equipment aboard marine vessels applying electrical apparatus for power, propulsion, steering, automation, navigation, lighting, and communications. These recommendations describe present-day acceptable electrical engineering methods and practices.

It is recognized that changes and improvements in shipboard requirements may develop that are not specifically covered herein; such changes, if incorporated in the design, should be equal to the safety and reliability levels established herein and generally in accord with the intent of these standards.

In developing these recommendations, consideration was given to the electrical and engineering requirements promulgated by various regulatory agencies, classification societies, and by the International Maritime Organization's International Convention for the Safety of Life at Sea (IMO SOLAS), as amended.

This recommended practice was developed by a voluntary consensus body to provide assistance and guidance to regulatory agencies governing electrical engineering requirements.

1.2 Purpose

The main purpose of this recommended practice is to provide a consensus of recommended practices in the unique field of marine electrical engineering as applied specifically to ships, shipboard systems, and equipment.

1.3 Vessel classification

1.3.1 Vessel classification this recommended practice is applicable to

These recommendations have been prepared for application for the following vessels:

a) Tank vessels—All vessels whose principle purpose is the carrying of combustible or flammable liquid cargo in bulk.

Copyright © 2002 IEEE. All rights reserved.

Copyright The Institute of Electrical and Electronics Engineers, Inc.
Provided by IHS under license with IEEE
No reproduction or networking permitted without license from IHS
Not for Resale

b) Passenger vessels
   1) All vessels of 100 gross tons or more whose principle purpose is the carrying of passengers.
   2) Small passenger vessels under 100 gross tons carrying more than 6, but less than 150 passengers, or has overnight accommodations for less than 50 passengers.
   3) Small passenger vessels carrying more than 150 passengers or with overnight accommodations for more than 49 passengers.
c) Cargo and miscellaneous vessels—All vessels carrying freight for hire not covered in other groups, all tugboats and tow boats, all seagoing barges not covered in other groups.
d) Mobile offshore drilling units (MODU)—A vessel, other than a "mobile inland drilling unit," which is capable of engaging in drilling or workover operations for the explorations and exploitation of subsea mineral resources. These recommendations apply to all types of MODUs without production facilities, including, but not limited to, semi-submersible units, submersible units, self-elevating or jack-up units, and drillships and tenders.
e) Mobile inland drilling units (MIDU)—A vessel, other than a "mobile offshore drilling unit," which is capable of engaging in drilling or workover operations for the exploration or exploitation of subsea mineral resources and is designed and intended for use in U.S. waters, rivers, inland lakes, bays, or sounds. These recommendations apply to all types of MIDU without production facilities, including, but not limited to, inland barges and posted inland barges.
f) Offshore supply vessels.
g) Nautical school vessels.
h) Oceanographic research vessels—All vessels engaged in oceanographic research.
i) Noncombatant vessels—Including all naval auxiliary ships, military supply vessels, and icebreakers.

1.3.2 Vessel classification and facilities this recommended practice is not applicable to

These recommendations have not been prepared for application for the facilities and vessels listed in item a) item b), and item c) because they are outside the scope of this recommended practice and are covered under national and international standards.

a) Fixed petroleum facilities.
b) Floating petroleum facilities—A buoyant facility that is securely and substantially moored so that it cannot be moved without a special effort. The term includes, but is not limited to, tension leg platforms, floating production systems, floating production storage and offloading (FPSO), and spar buoy or deep draft caisson vessel. These types of floating facilities are site-specific and not intended for periodic relocation. Other types of floating facilities include permanently moored semi-submersibles and shipshape hulls. All of these types of floating facilities produce hydrocarbons from the well and process them on board and either store them on board and pump the produced hydrocarbon into a pipeline or directly onto another vessel.
c) Recreational vessels.

1.4 Documentation

Every vessel should be provided with comprehensive sets of as-built electrical installation drawings and instruction books providing complete and detailed information regarding the operation and maintenance of the systems and equipment. Drawings for each system should provide cable routing information, cable identification, cable sizes, loads, protective device settings, circuit data, conductor termination details, and material lists. Calculation of fault currents with associated overcurrent protective device coordination curves should also be provided. Instruction books should include descriptions and illustrations that provide equipment operating instructions, maintenance procedures, test requirements, and spare parts recommendations. A booklet containing the manufacturer's name, size, type, rating, catalog number, or similar identification for all electrical and electronic equipment on the vessel should also be provided for use by shipboard personnel. An as-built one-line diagram of the ship's power generation and distribution system should be permanently installed in a location accessible at all times to the engineering personnel.

Copyright © 2002 IEEE. All rights reserved.
Copyright The Institute of Electrical and Electronics Engineers, Inc.
Provided by IHS under license with IEEE
No reproduction or networking permitted without license from IHS
Not for Resale

1.5 Environmental conditions

1.5.1 Normal design and operating conditions

Systems and equipment should be suitable for continuous operation under the following shipboard conditions:

a) Exposure to moisture-laden and salt-laden atmosphere, weather, sun, high wind velocities, and ice.
b) Equipment and systems shall be designed for temperature extremes and conditions expected. Typically, the following conditions can be used: ambient temperature values of 40 °C in accommodation areas, and similar spaces; 45 °C in main and auxiliary machinery spaces; 50 °C for rotating machinery and propulsion equipment in main and auxiliary machinery spaces containing significant heat sources such as prime movers and boilers; and 65 °C in the uptakes of machinery spaces containing prime movers and boilers; all at relative humidities up to 95%. The design value for seawater cooling temperature should be 32 °C.
c) Roll and pitch of a vessel underway, as shown in Table 1.

Table 1—Roll and pitch requirements

	Roll		Pitch	
	Static (°)	**Dynamic (°)**	**Static (°)**	**Dynamic (°)**
Ship service equipment	15	22.5	5	7.5
Emergency equipment[a]	22.5	22.5	10	10
Switchgear	45	45	45	45

[a]In vessels designed for carriage of liquefied gases and of chemicals, the emergency power installation is to remain operable with the vessel flooded to its permissible athwartship inclination up to a maximum of 30°.

d) Vibration of a vessel underway: Electrical equipment should be constructed to withstand at least the following:
   1) Vibration frequency range of 5–50 Hz with a velocity amplitude of 20 mm/s.
   2) Peak accelerations due to ship motion in a seaway of ± 5.9 m/sec^2 for ships exceeding 90 m in length, and ± 9.8 m/sec^2 for smaller ships, with a duration of 5–10 s.

1.5.2 Abnormal design and operating conditions

Special conditions for a specific ship design or operating arrangement may require special consideration. Examples of such conditions include, but are not necessarily limited to

— Exposure to damaging fumes or vapors, excessive or abrasive dust, steam, salt-spray, ice, sunlight, physical damage, and so on
— Exposure to high levels of shock and vibration
— Exposure to high or low temperatures
— Operation in flammable atmospheres (see Clause 33)
— Exposure to unusual loading or unloading conditions affecting list and trim
— Unusual operating cycles, frequency of operation, poor power quality, special insulation requirements, stringent or difficult maintenance requirements, and so on

Copyright © 2002 IEEE. All rights reserved.

Copyright The Institute of Electrical and Electronics Engineers, Inc.
Provided by IHS under license with IEEE
No reproduction or networking permitted without license from IHS
Not for Resale

1.6 Equipment construction, testing, and certification

Electrical apparatus and equipment should be constructed and tested in accordance with the requirements of appropriate national and international equipment standards. Standards specifically addressing marine requirements should be used whenever applicable. Many appropriate standards are referenced in this document. All electrical equipment should be tested and certified, with labeling and follow-up services (i.e., listed) by a recognized independent laboratory acceptable to the authority having jurisdiction.

1.7 Application of various national and international standards

CAUTION

It is recognized that various national and international standards for equipment and installations are not identical. However, it is recognized that mixing of standards is occasionally necessary. Therefore, the application of any of these standards is the choice of the user, authority having jurisdiction, and classification society.

Special precautions must be exercised when mixing equipment designed to different national and international standards. Coordination of different equipment design and testing standards, construction ratings, installation methods, and performance must be carefully analyzed.

1.8 Materials

1.8.1 Corrosion-resistant parts

Where essential to minimize deterioration due to marine atmospheric corrosion, corrosion-resisting materials, or other materials treated in a satisfactory manner to render them adequately resistant to corrosion, should be used. Silver, corrosion-resisting steel, copper, brass, bronze, copper-nickel, certain nickel-copper alloys, and certain aluminum alloys are considered satisfactory corrosion-resisting materials.

The following treatments, when properly performed and of a sufficiently heavy coating, are considered satisfactory corrosion-resistant treatments:

— Electroplating

— Sherardizing

— Galvanizing

— Dipping and painting (phosphate or suitable cleaning, followed by the application of a coating system) meeting the requirements of ASTM B117-97[1]).

These provisions apply to the following components:

— Parts. Interior small parts that are normally expected to be removed in service, such as bolts, nuts, pins, screws, cap screws, terminals, brushholder studs, springs, and so on.

— Assemblies, subassemblies, and other units where necessary due to the unit function, or for interior protection, such as shafts within a motor or generator enclosure, and surface of stator and rotor.

[1]Information on references can be found in Clause 2.

Copyright © 2002 IEEE. All rights reserved.
Copyright The Institute of Electrical and Electronics Engineers, Inc.
Provided by IHS under license with IEEE
No reproduction or networking permitted without license from IHS
Not for Resale

— Enclosures and their fastenings and fittings. Enclosing cases for control apparatus, outer cases for signal and communication systems (both outside and inside), and similar items, together with all their fastenings and fittings that would be seriously damaged or rendered ineffective by corrosion.

1.8.2 Flame-retardant materials

Flame-retardant materials and structures should be used to the maximum extent practicable throughout the vessel. These materials should have such fire-resisting properties that they will not convey flame nor continue to burn for longer times than specified in the appropriate flame test.

Compliance with the requirements of the preceding paragraph should be determined with the apparatus and according to the methods described in appropriate nationally recognized test laboratory standards for the materials and structures being considered, unless specific applicable tests are invoked in these recommendations.

1.9 Brittle material

Porcelain or other brittle insulating materials should not be used for bus supports, lamp sockets, receptacles, fuse blocks, and so on, where the material is rigidly fastened by machine screws or equivalent.

2. References

This recommended practice shall be used in conjunction with the following publications. Unless the standard is specifically dated, the current approved edition shall apply.

ANSI/NEMA ICS 1-1993, Industrial Control and Systems General Requirements.[2]

ANSI/NEMA MG 1-1998, Motors and Generators.

API RP 14F-1999, Design and Installation of Electrical Systems for Fixed and Floating Offshore Petroleum Facilities for Unclassified and Class I, Division 1 and Division 2 Locations.[3]

API RP 14FZ-2001, Design and Installation of Electrical Systems for Fixed and Floating Offshore Petroleum Facilities for Unclassified and Class 1, Zone 0, Zone 1, Zone 2 Locations.

API RP 500-1997, Classifications of Locations for Electrical Installation at Petroleum Facilities Classified as Class I, Division 1 and Division 2.

API RP 505-1997, Classification of Locations for Electrical Installations at Petroleum Facilities Classified as Class I, Zone 0, Zone 1, and Zone 2.

API Std 541, Form-Wound Squirrel-Cage Induction Motors - 250 Horsepower & Larger, 3rd Edition, 1995.

ASTM D-178-2001, Standard Specification for Rubber Insulating Matting.[4]

ASTM B117-97, Standard Practice for Operating Salt Spray (FOG) Apparatus.

[2]ANSI publications are available from the Sales Department, American National Standards Institute, 25 West 43rd Street, 4th Floor, New York, NY 10036, USA (http://www.ansi.org/).

[3]API publications are available from the Publications Section, American Petroleum Institute, 1200 L Street NW, Washington, DC 20005, USA (http://www.api.org/).

[4]ASTM publications are available from the American Society for Testing and Materials, 100 Barr Harbor Drive, West Conshohocken, PA 19428-2959, USA (http://www.astm.org/).

Copyright © 2002 IEEE. All rights reserved.

Copyright The Institute of Electrical and Electronics Engineers, Inc.
Provided by IHS under license with IEEE
No reproduction or networking permitted without license from IHS Not for Resale

ASTM D229-96, Standard Test Methods for Rigid Sheet and Plate Materials Used for Electrical Insulation.

ASTM F1003-86 (R1992), Standard Specification for Searchlights on Motor Lifeboats.

ASTM F1166-95a, Standard Practice for Human Engineering Design for Marine Systems, Equipment and Facilities.

BS 6883-1999, Specification for Elastomer-Insulated Cables for Fixed Wiring in Ships and on Mobile and Fixed Offshore Units.[5]

CSA C22.2 No. 45, Rigid Metal Conduit.[6]

CSA C22.2 No. 38-1995, Thermoplastic Insulated Wires and Cables; (Gen. Instr. 1).

IEEE Std C37.04™-1999, IEEE Standard Rating Structure for AC High-Voltage Circuit Breakers Rated on a Symmetrical Current Basis. [7, 8]

IEEE Std C37.13™-1990 (Reaff 1995), IEEE Standard for Low-Voltage AC Power Circuit Breakers Used in Enclosures.

IEEE Std C37.20™-1987, Switchgear Assemblies - Including Metal Enclosed Bus.[9]

IEEE Std C37.20.1™-1993 (Reaff 1998), IEEE Standard for Metal-Enclosed Low-Voltage Power Circuit Breaker Switchgear.

IEEE Std C37.20.2™-1999, IEEE Standard for Metal-Clad Switchgear.

IEEE Std C37.20.7™-2000, IEEE Guide for Testing Medium-Voltage Metal-Enclosed Switchgear for Internal Arcing Faults.

IEEE Std C57.13™-1993, IEEE Standard Requirements for Instrument Transformers.

IEEE Std 43™-2000, IEEE Recommended Practice for Testing Insulation Resistance of Rotating Machinery.

IEEE Std 48™-1996, IEEE Standard Test Procedures and Requirements for Alternating-Current Cable Terminations 2.5 kV through 765 kV.

IEEE Std 112™-1996, IEEE Standard Test Procedure for Polyphase Induction Motors and Generators.

IIEEE Std 115™-1995, IEEE Guide: Test Procedures for Synchronous Machines, Part I—Acceptance and Performance Testing, Part II-Test Procedures and Parameter Determination for Dynamic Analysis.

IEEE Std 432™-1992, IEEE Guide for Insulation Maintenance for Rotating Electric Machinery (5 hp to less than 10 000 hp).

---

[5]BS standards are available from Global Engineering Documents, 15 Inverness Way East, Englewood, Colorado 80112, USA (http://global.ihs.com/).

[6]CSA publications are available from the Canadian Standards Association (Standards Sales), 178 Rexdale Blvd., Etobicoke, Ontario, Canada M9W 1R3 (http://www.csa.ca/).

[7]The IEEE standards or products referred to in Clause 2 are trademarks owned by the Institute of Electrical and Electronics Engineers, Incorporated.

[8]IEEE publications are available from the Institute of Electrical and Electronics Engineers, 445 Hoes Lane, P.O. Box 1331, Piscataway, NJ 08855-1331, USA (http://standards.ieee.org/).

[9]IEEE Std C37.20-1987 has been withdrawn; however, copies can be obtained from Global Engineering, 15 Inverness Way East, Englewood, CO 80112-5704, USA, tel. (303) 792-2181 (http://global.ihs.com/).

Copyright © 2002 IEEE. All rights reserved.
Copyright The Institute of Electrical and Electronics Engineers, Inc.
Provided by IHS under license with IEEE
No reproduction or networking permitted without license from IHS
Not for Resale

IEEE Std 444™-1973 (Reaff 1992), Standard Practices and Requirements for Thyristor Converters for Motor Drives, Part 1-Converters for DC Motor Armature Supplies.

IEEE Std 515™-1997, IEEE Standard for the Testing, Design, Installation and Maintenance of Electrical Resistance Heat Tracing for Industrial Applications.

IEEE Std 515.1™-1995, IEEE Recommended Practice for the Testing, Design, Installation, and Maintenance of Electrical Resistance Heat Tracing for Commercial Applications.

IEEE Std 576™-2001, IEEE Recommended Practice for Installation, Termination, and Testing of Insulated Power Cable as Used in the Petroleum and Chemical Industry.

IEEE Std 835™-1994, IEEE Standard Power Cable Ampacity Tables.

IEEE Std 841™-2001, IEEE Standard for Petroleum and Chemical Industry—Severe Duty Totally Enclosed Fan-Cooled (TEFC) Squirrel Cage Induction Motors—Up to and Including 370 kW (500 hp).

IEEE Std 844™-2000, IEEE Recommended Practice for Electrical Impedance, Induction, and Skin Effect Heating of Pipelines and Vessels.

IEEE Std 1202™-1991 (Reaff 1996), IEEE Standard for Flame Testing of Cables for Use in Cable Tray in Industrial and Commercial Occupancies.

IEEE Std 1580™-2001, IEEE Recommended Practice for Marine Cable for Use on Shipboard and Fixed or Floating Platforms.

IES RP-12-1998, Recommended Practice for Marine Lighting.[10]

IMO Resolution A.686 (20 January 1992), Code on Alarms and Indicators.[11]

JIS C3410, Cables and Flexible Cords for Electrical Equipment of Ships.[12]

MIL-PRF-85045F, General Specifications for Cables, Fiber Optics (METRIC).[13]

NES-711 Issue 2, January 1981, Determination of the Smoke Index of the Products of Combustion from Small Specimens of Materials, as modified in MIL-C-24643, paragraph 4.7.27.[14]

NFPA 13, Installation of Sprinkler Systems.[15]

NFPA 70-2002, National Electrical Code® (NEC®).

NFPA 77-2000, Static Electricity.

---

[10]IES publications are available from CSSinfo, 310 Miller Avenue, Ann Arbor, MI 48103, USA.

[11]IMO publications are available from the International Maritime Organization, 4 Albert Embankment, London SE1 7SR, United Kingdom.

[12]JIS standards are available from Global Engineering Documents, 15 Inverness Way East, Englewood, Colorado 80112, USA (http://global.ihs.com/).

[13]MIL publications are available from Customer Service, Defense Printing Service, 700 Robbins Ave., Bldg. 4D, Philadelphia, PA 19111-5094 (http://store.mil-standards.com).

[14]NES publications are available from Procurement Executive, Ministry of Defense, Ship Department, Section TE112, Block G, Foxhill, Bath, United Kingdom.

[15]NFPA publications are published by the National Fire Protection Association, Batterymarch Park, Quincy, MA 02269, USA (http://www.nfpa.org/).

Copyright © 2002 IEEE. All rights reserved.

Copyright The Institute of Electrical and Electronics Engineers, Inc.
Provided by IHS under license with IEEE
No reproduction or networking permitted without license from IHS Not for Resale

NFPA 72-1999, National Fire Alarm Code.

SOLAS Consolidated Edition, 1997, Consolidated text of the International Convention for the Safety of Life at Sea, 1974, and its Protocol of 1978: articles, annexes and certificates. Incorporating all amendments in effect from 1 July 1997.[16]

UL 13-1996, Standard for Safety for Power-Limited Circuit Cables.[17]

UL 62-1997, Standard for Safety for Flexible Cord and Fixture Wire.

UL 73-1993, Standard for Safety for Motor-Operated Appliances.

UL 153-2002, Standard for Safety for Portable Electric Luminaries.

UL 197-1993, Standard for Safety for Commercial Electric Cooking Appliances.

UL 347-1993, Standard for Safety for High Voltage Industrial Control Equipment.

UL 399-1993, Standard for Safety for Drinking-Water Coolers.

UL 444-1994, Standard for Safety for Communication Cables.

UL 486A-1991, Standard of Safety for Wire Connectors and Soldering Lugs for Use With Copper Conductors.

UL 489-1996, Standard for Safety for Molded-Case Circuit Breakers, Molded-Case, Switches, and Circuit-Breakers Enclosures.

UL 507-1999, Standard for Safety for Electric Fans.

UL 595-1985, Standard for Safety for Marine Type Electric Lighting Fixtures.

UL 845-1995, Standard for Safety for Motor Control Centers.

UL 891-1998, Standard for Safety for Dead-Front Switchboards.

UL 913-1988, Standard for Intrinsically Safe Apparatus and Associated Apparatus for Use in Class II, and III, Division I, Hazardous Locations.

UL 921-1992, Standard of Safety for Commercial Electric Dishwashers.

UL 924-1995, Standard for Safety for Emergency Lighting and Power Equipment.

UL 1008-1996, Standard of Safety for Transfer Switch Equipment.

UL 1042-1994, Standard of Safety for Electric Baseboard Heating Equipment.

UL 1309-1995, Standard for Safety Marine Shipboard Cable.

---

[16]SOLAS publications are available from the International Maritime Organization, 4 Albert Embankment, London SE1 7SR, United Kingdom.

[17]UL standards are available from Global Engineering Documents, 15 Inverness Way East, Englewood, Colorado 80112, USA (http://global.ihs.com/).

Copyright © 2002 IEEE. All rights reserved.
Copyright The Institute of Electrical and Electronics Engineers, Inc.
Provided by IHS under license with IEEE
No reproduction or networking permitted without license from IHS
Not for Resale

UL 1278-2000, Standard for Safety for Moveable and Wall- or Ceiling-Hung Electric Room Heaters.

UL 1558-1999, Standard for Safety for Metal-Enclosed Low-Voltage Power Circuit Breakers Switchgear.

UL 1570-1995, Standard for Safety for Fluorescent Lighting Fixtures.[18]

UL 1571-1995, Standard for Safety for Incandescent Lighting Fixtures.[19]

UL 1572-1995, Standard for Safety for High Intensity Discharge Lighting Fixtures.[20]

UL 1598-2000, Standard for Safety for Luminaires for Maine Use or Reflector Kit Applications.

UL 1651-1997, Standard for Safety for Optical Fiber Cable.

UL 2021-1997, Standard for Safety for Fixed and Location-Dedicated Electric Room Heaters.

UL 2250-1996, Standard for Safety for Instrumentation Tray Cable.

3. Definitions

For the purposes of the recommended practice, the following terms and definitions apply. *The Authoritative Dictionary of IEEE Standards Terms,* Seventh Edition [B31], should be referenced for terms not defined in this clause.

3.1 General

3.1.1 accommodation spaces: Spaces provided for passengers and crew members that are used for berthing, dining rooms, mess spaces, offices, private baths, toilets and showers, lounges, and similar spaces.

3.1.2 alternating current (ac): A periodic current with an average value over a period of time of zero. (Unless distinctly specified otherwise, the term refers to a current that reverses at regularly recurring intervals of time and that has alternately positive and negative values.)

3.1.3 asynchronous machine: A machine in which the speed of operation is not proportional to the frequency of the system to which it is connected.

3.1.4 automatic bus transfer (ABT) system: Self-acting equipment for transferring one or more load conductor connections from one power source to another.

3.1.5 capacitance (capacity): That property of a system of conductors and dielectrics that permits the storage of electricity when potential differences exist between the conductors. Its value is expressed as the ratio of a quantity of electricity to a potential difference. A capacitance value is always positive.

3.1.6 capacitor: A device with the primary purpose of introducing capacitance into an electric circuit. Capacitors are usually classified, according to their dielectrics, as air capacitors, mica capacitors, paper capacitors, and so on.

---

[18]UL 1570-1995 has been withdrawn; however, copies can be obtained from Global Engineering, 15 Inverness Way East, Englewood, CO 80112-5704, USA, tel. (303) 792-2181 (http://global.ihs.com/).

[19]UL 1571-1995 has been withdrawn; however, copies can be obtained from Global Engineering, 15 Inverness Way East, Englewood, CO 80112-5704, USA, tel. (303) 792-2181 (http://global.ihs.com/).

[20]UL 1572-1995 has been withdrawn; however, copies can be obtained from Global Engineering, 15 Inverness Way East, Englewood, CO 80112-5704, USA, tel. (303) 792-2181 (http://global.ihs.com/).

--`,,-`-`,,`,,`,`,,`---

Copyright © 2002 IEEE. All rights reserved.

Copyright The Institute of Electrical and Electronics Engineers, Inc.
Provided by IHS under license with IEEE
No reproduction or networking permitted without license from IHS Not for Resale

3.1.7 cargo vessel: A vessel that carries bulk, containerized, or roll-on/roll-off dry cargo, and no more than 12 passengers. Research vessels, search and rescue vessels, and tugs are also considered to be cargo vessels in these recommendations.

3.1.8 cycle: The complete series of values of a periodic quantity that occurs during a period. (It is one complete set of positive and negative values of an alternating current.)

3.1.9 direct current (dc): A unidirectional current in which the changes in value (polarity) are either zero or so small that they may be neglected. (As ordinarily used, the term designates a practically nonpulsating current.)

3.1.10 direct-current (dc) commutating machine: A machine that comprises a magnetic field excited from a dc source or formed of permanent magnets, an armature, and a commutator connected therewith. Specific types of dc commutating machines are dc generators, motors, synchronous converters, boosters, balancers, and dynamotors.

3.1.11 electric coupling: A device for transmitting torque by means of electromagnetic force in which no mechanical torque contact occurs between the driving and driven members. The slip-type electric coupling has poles excited by direct current on one rotating member, and an armature winding, usually of the double squirrel cage type, on the other rotating member.

3.1.12 electronics: That branch of science and technology that relates to devices in which conduction is principally by electrons moving through a vacuum, gas, or semiconductor.

3.1.13 embedded temperature detector: A resistance thermometer or thermocouple built into a machine for the purpose of measuring the temperature.

3.1.14 frequency: The number of periods occurring in unit time of a periodic quantity, in which time is the independent variable.

3.1.15 frequency converter: A converter using semiconductor devices to vary the output waveform and frequency to a motor as a means of controlling motor speed and or torque.

3.1.16 Hertz (Hz): The unit of frequency, one cycle per second.

3.1.17 induction machine: An asynchronous ac machine that comprises a magnetic circuit interlinked with two electric circuits, or sets of circuits, rotating with respect to each other and in which power is transferred from one circuit to another by electromagnetic induction. Examples of induction machines are induction generators, induction motors, and certain types of frequency converters and phase converters.

3.1.18 lighters: A short-range cargo-transfer vessel or barge used for ferrying cargo or personnel.

3.1.19 loran: A long-range radio navigational aid of the hyperbolic type whose position lines are determined by the measurement of the difference in the time of arrival of synchronized pulses. (These devices are rapidly being replaced by satellite-based global positioning systems.)

3.1.20 machinery spaces: Spaces that are primarily used for machinery of any type, or equipment for the control of such machinery, such as boiler, engine, generator, motor, pump, and evaporator rooms.

3.1.20.1 main machinery space: A space generally confined by the fire-proof boundary of the machinery casing, and normally containing major ships' equipment and prime moving equipment, including propulsion services equipment.

--`,,`-`-`,,`,,`,`,,`---

Copyright © 2002 IEEE. All rights reserved.
Copyright The Institute of Electrical and Electronics Engineers, Inc.
Provided by IHS under license with IEEE
No reproduction or networking permitted without license from IHS
Not for Resale

3.1.20.2 auxiliary machinery space: Spaces containing ship-service or mission machinery, but located outside of the main machinery casing.

3.1.21 manual bus transfer (MBT) switch: Non-self-acting equipment for transferring one or more load conductor connections from one power source to another.

3.1.22 passenger vessel: A vessel that carries more than 12 persons in addition to the crew.

3.1.23 radar: A device that radiates electromagnetic waves and utilizes the reflection of such waves from distant objects to determine their existence or position.

3.1.24 reactance: The imaginary component (± j, or ± 90° phase angle) of impedance, where resistance is the real component with a zero phase angle. Reactance appears in two forms, one as a capacitive reactance (Xc) for a capacitor (C), and the other as inductive reactance (X_l) for an inductor (L). The former has the negative 90° phase angle, and the latter a positive 90° angle. Their values can be expressed in the following relationships:

$$Xc = \frac{1}{2\pi fC}$$

and

$$X_l = 2\pi fL$$

where f is the excitation frequency.

3.1.25 reactor: A device with the primary purpose of introducing reactance into an electric circuit for purposes such as motor starting, paralleling transformers, and control of current.

3.1.26 semiconductor rectifier: A device consisting of a conductor and semiconductor forming a junction. The junction exhibits a difference in resistance to current flow in the two directions through the junction. This results in effective current flow in one direction only. The semiconductor rectifier stack is a single columnar structure of one or more semiconductor rectifier cells.

3.1.27 single-phase circuit: A circuit energized by a single alternating electromotive force.

NOTE—A single-phase circuit is usually supplied through two conductors. The currents in these two conductors, counted outward from the source, differ in phase by 180° or a half-cycle.

3.1.28 slip: In an induction machine, the difference between its synchronous speed and its operating speed. It may be expressed in the following ways:

a) As a percent of synchronous speed
b) As a decimal fraction of synchronous speed
c) Directly in revolutions per minute

3.1.29 switchboard: A metal-enclosed panel or assembly of panels that may contain molded case, insulated case or power circuit breakers, bolted pressure contact or fusible switches, protective devices, and instruments. These devices may be mounted on the face or the back of the assembly. Switchboards are generally accessible from the rear as well as from the front; however, they can be front accessible only.

3.1.30 synchronous machines: A machine in which the average speed of normal operation is exactly proportional to the frequency of the system to which it is connected.

Copyright © 2002 IEEE. All rights reserved.

Copyright The Institute of Electrical and Electronics Engineers, Inc.
Provided by IHS under license with IEEE
No reproduction or networking permitted without license from IHS
Not for Resale

3.1.31 tank vessel: A vessel that carries liquid or gaseous cargo in bulk.

3.1.32 three-phase circuit: A combination of circuits energized by alternating electromotive forces that differ in phase by one-third of a cycle (120°).

NOTE—In practice, the phases may vary several degrees from the specified angle.

3.2 Cable installation

3.2.1 lug: A wire connector device to which the electrical conductor is attached by mechanical pressure or solder.

3.2.2 multicable penetrator: A device consisting of multiple nonmetallic cable seals assembled in a surrounding metal frame, for insertion in openings in decks, bulkheads, or equipment enclosures and through which cables may be passed to penetrate decks or bulkheads or to enter equipment without impairing their original fire or watertight integrity.

3.3 Generators

3.3.1 brushless exciter: An ac (rotating armature type) exciter whose output is rectified by semiconductor devices to provide excitation to an electric machine. The semiconductor devices are mounted on, and rotate with, the ac exciter armature.

3.3.2 brushless synchronous machine: A synchronous machine that has a brushless exciter with its rotating armature and semiconductor devices on a common shaft with the field of the main machine. This type of machine has no collector, commutator, or brushes.

3.3.3 compound-wound generator: A dc generator that has two separate field windings. One supplies the predominating excitation and is connected in parallel with the armature circuit. The other supplies only partial excitation and is connected in series with the armature circuit. It is proportioned to require an equalizer connection for satisfactory parallel operation.

3.3.4 electric generator: A machine that transforms mechanical power into electric power.

3.3.5 exciter: The source of all or part of the field current for the excitation of an electric machine.

3.3.6 homopolar generator: A dc generator in which the magnetic field flux passes in the same direction from one member to the other over the whole of a single air gap area. Characteristically, the machines are high-current, low-voltage generators.

3.3.7 induction generator: An induction machine driven above synchronous speed by an external source of mechanical power.

3.3.8 inductor-type synchronous generator: A generator in which the field coils are fixed in magnetic position relative to the armature conductors. The electromotive forces are produced by the movement of masses of magnetic material.

3.3.9 permanent magnet generator: An electric generator in which the magnetic flux is provided by one or more pairs of permanent magnets.

3.3.10 pilot exciter: The source of all or part of the field current for the excitation of another exciter.

--`,,`-`-`,,`,,`,`,,`---

Copyright © 2002 IEEE. All rights reserved.
Copyright The Institute of Electrical and Electronics Engineers, Inc.
Provided by IHS under license with IEEE
No reproduction or networking permitted without license from IHS
Not for Resale

3.3.11 polyphase synchronous generator: A generator whose field circuits are arranged so that two or more symmetrical alternating electromotive forces with definite phase relationships are produced at the terminals. They are usually two-phase, producing two electromotive forces displaced 90 electrical degrees apart, or three-phase, producing three electromotive forces displaced 120 electrical degrees apart. (They are used for marine services and are generally three phase.)

3.3.12 shunt-wound generator: A dc generator in which the entire field excitation is ordinarily derived from one winding consisting of many turns with a relatively high resistance. This winding is connected in parallel with the armature circuit in a self-excited generator. In a separately excited generator, the winding is connected to the load side of another generator or another dc source.

3.3.13 single-phase synchronous generator: A generator that produces a single alternating electromotive force at its terminals. It delivers electric power that pulsates at double frequency.

3.3.14 stabilized shunt-wound generator: Same as the shunt-wound type, except that a series field winding is added. The series field winding is proportioned such that it does not require equalizers for satisfactory parallel operation. The voltage regulation of this type of generator should be the same as shunt-wound generators.

3.3.15 synchronous generator: A synchronous ac machine that transforms mechanical power into electric power. (A synchronous machine is one in which the average speed of normal operation is exactly proportional to the frequency of the system to which it is connected.)

3.3.16 variable speed constant frequency generator (VSCF): An ac generator designed to have a constant frequency output with a variable speed input. This may be accomplished with an induction generator having an ac/ac converter feedback circuit that excites the wound rotor at a frequency to produce a constant frequency output. This may also be accomplished by a synchronous generator whose variable output frequency is fed into a frequency changer that produces a constant output frequency. Basic frequency changers may be of the cycloconverter or dc link type.

3.4 Motors

3.4.1 adjustable-speed motor: A motor whose speed can be varied gradually over a range of speeds, but when once adjusted remains practically unaffected by the load, such as a dc shunt-wound motor with field resistance control designed for a range of speed adjustments.

3.4.2 adjustable-varying-speed motor: A motor whose speed can be adjusted gradually, but when once adjusted for a given load will vary with change in load, such as a dc compound-wound motor adjusted by field control or a wound-rotor induction motor with speed control.

3.4.3 amortisseur winding: A permanently short-circuited winding used for starting induction motors consisting of conductors embedded in the pole shoes of a synchronous machine and connected together at the ends of the poles, but not necessarily connected between poles.

3.4.4 base speed of an adjustable-speed motor: The lowest speed obtained at rated load and rated voltage at the specified temperature rise.

3.4.5 breakdown torque: The maximum torque a motor will develop, with rated voltage applied at rated frequency, without an abrupt drop in speed.

3.4.6 compound-wound motor: A dc motor that has two separate field windings: one, usually the predominating field, connected in parallel with the armature circuit, and the other connected in series with the armature circuit. Speed and torque characteristics are between those of shunt and series motors.

Copyright © 2002 IEEE. All rights reserved.

Copyright The Institute of Electrical and Electronics Engineers, Inc.
Provided by IHS under license with IEEE
No reproduction or networking permitted without license from IHS
Not for Resale

3.4.7 continuous duty: A requirement of service that demands operation at a constant load for an indefinite period of time.

3.4.8 electric motor: A machine that transforms electric power into mechanical power.

3.4.9 induction motor: A polyphase ac motor in which the secondary field current is created solely by induction. The motor operates at less than synchronous speed and less than unity power factor. The operating speed is dependent on the frequency of the power source. It is generally the motor of choice for auxiliary drives.

3.4.10 intermittent duty: A requirement of service that demands operation for alternate periods: load and no load, load and rest, or load, no load, and rest, as specified.

3.4.11 locked-rotor torque: The minimum torque of a motor developed for all angular positions of the rotor, when at rest, and with rated voltage and frequency applied.

3.4.12 motor reduction unit: A motor with an integral mechanical means of obtaining a speed different from the speed of the motor.

NOTE—Motor reduction units are usually designed to obtain a speed lower than that of the motor, but they may also be built to obtain a speed higher than that of the motor.

3.4.13 multispeed motor: A motor that can be operated at any one of two or more definite speeds, each being practically independent of the load. For example, a dc motor with two armature windings, or an induction motor with windings capable of various pole groupings.

3.4.14 pull-out torque: The maximum sustained torque that a synchronous motor will develop at synchronous speed with rated voltage applied at rated frequency and with normal excitation.

3.4.15 series-wound motor: A dc motor in which the field circuit and armature circuit are connected in series. Speed is inversely proportional to the square root of load torque. Motor operates at a much higher speed at light load than at full load.

3.4.16 shunt-wound motor: A dc motor in which the field circuit is connected either in parallel with the armature circuit or to a separate source of excitation voltage.

3.4.17 squirrel-cage induction motor: A motor in which the secondary circuit consists of a squirrel-cage winding suitably disposed in slots in the secondary core.

3.4.18 squirrel-cage winding: A permanently short-circuited winding, usually uninsulated (primarily used in induction machines), having its conductors uniformly distributed around the periphery of the machine and joined by continuous end rings.

3.4.19 stabilized shunt-wound motor: A shunt-wound motor that has a light series winding added to prevent a rise in speed, or to obtain a slight reduction in speed, with increase of load.

3.4.20 synchronous motor: A polyphase ac motor with separately supplied dc field and an auxiliary (amortisseur) winding for starting purposes. The operating speed is fixed by the frequency (f) of the system and the number of poles (p) of the motor. (Synchronous speed (r/min) = $120\ f/p$). Thus, the speed of the motor can be varied by varying the frequency of the power source. The synchronous motor generally operates at unity power factor and can be used to improve the system power factor. It is generally the motor of choice for ac propulsion systems.

Copyright © 2002 IEEE. All rights reserved.
Copyright The Institute of Electrical and Electronics Engineers, Inc.
Provided by IHS under license with IEEE
No reproduction or networking permitted without license from IHS
Not for Resale

3.4.21 torque margin: The increase in torque above rated torque to which a motor may be subjected without the motor pulling out of step. This is of particular concern with electric propulsion systems.

3.4.22 universal motor: A series-wound or a compensated series-wound motor designed to operate at approximately the same speed and output on either a direct- or single-phase alternating current of a frequency not greater than 60 Hz and of approximately the same rms voltage.

3.4.23 varying-speed motor: A motor whose speed varies with the load, ordinarily decreasing when the load increases, such as a series-wound or repulsion motor.

3.4.24 wound-rotor induction motor: An induction motor in which the secondary circuit consists of polyphase winding or coils whose terminals are either short-circuited or closed through suitable circuits. (When provided with collector or slip rings, it is also known as a slip-ring induction motor.)

3.5 Converters

3.5.1 adjustable speed drive: A converter using controlled rectifier or transistor devices that has the capability of adjusting the frequency and proportional voltage of the output waveform to provide speed control of motors.

3.5.2 direct-current balancer: A machine that comprises two or more similar dc machines (usually with shunt or compound excitation) directly coupled to each other and connected in series across the outer conductors of a multiple wire system of distribution, for the purpose of maintaining the potentials of the intermediate conductors of the system, which are connected to the junction points between the machines.

3.5.3 dynamotor: A form of converter that combines both motor and generator action, with one magnetic field and with two armatures or with one armature having separate windings.

3.5.4 motor-generator set: A machine that consists of one or more motors mechanically coupled to one or more generators to convert electric power from one frequency to another, or to create an isolated power source.

3.5.5 power inverter: A component for converting dc power into ac power.

3.5.6 rectifier: A component for converting ac to dc by inversion or suppression of alternate half-cycles.

3.5.7 static converter/inverter: A unit that employs solid state devices such as semiconductor rectifiers or controlled rectifiers (thyristors), gated power transistors, electron tubes, or magnetic amplifiers to change ac power to dc power, dc power to ac power, or fixed-frequency ac power to variable-frequency ac power.

3.5.8 synchronous converter: A converter that combines both motor and generator action in one armature winding and is excited by one magnetic field. It is normally used to change ac power to dc power, or to create an isolated ac power source.

3.6 Rotating machine ventilation

3.6.1 enclosed self-ventilated machine: A machine that has openings for the ventilating air circulated by means integral with the machine, the machine being otherwise totally enclosed. These openings are so arranged that inlet and outlet ducts or pipes may be connected.

3.6.2 enclosed separately ventilated machine: A machine that has openings for ventilating air circulated by means external to and not a part of the machine, the machine being otherwise totally enclosed. These openings are so arranged that inlet and outlet duct pipes may be connected to them.

Copyright © 2002 IEEE. All rights reserved.

Copyright The Institute of Electrical and Electronics Engineers, Inc.
Provided by IHS under license with IEEE
No reproduction or networking permitted without license from IHS
Not for Resale

3.6.3 open machine: A machine that has ventilating openings that permit passage of external cooling air over and around the windings.

3.6.4 self-ventilated machine: A machine that has its ventilating air circulated by means integral with the machine.

3.6.5 separately ventilated machine: A machine that has its ventilating air supplied by an independent fan or blower external to the machine.

3.6.6 totally enclosed fan-cooled machine (TEFC): A totally enclosed machine equipped for exterior cooling by means of a fan or fans integral with the machine but external to the enclosing parts.

3.6.7 totally enclosed nonventilated machine (TENV): A machine enclosed to prevent the free exchange of air between the inside and outside of the case, but not sufficiently enclosed to be airtight.

3.6.8 totally enclosed water/air cooled machine (TEWAC): A totally enclosed machine with integral water-to-air heat exchanger and internal fan to provide closed-loop air cooling of the windings.

3.7 Equipment enclosures

NOTE—NEMA enclosure-type designations are indicated in parentheses, [e.g., (NEMA 1)]. See Annex C for additional information.

3.7.1 dripproof enclosure: An enclosure in which the openings are so constructed that drops of liquid or solid particles falling on the enclosure at any angle not greater than 15° from the vertical either cannot enter the enclosure, or if they do enter the enclosure, they will not prevent the successful operation of, or cause damage to, the enclosed equipment (NEMA 2 or 12).

NOTE—See Annex C for further information on IP enclosures.

3.7.2 dustproof enclosure: An enclosure so constructed or protected that any accumulation of dust that may occur within the enclosure will not prevent the successful operation of, or cause damage to, the enclosed equipment (NEMA 5).

3.7.3 dusttight enclosure: An enclosure constructed so that dust cannot enter (NEMA 5 or NEMA 12).

3.7.4 explosionproof enclosure: An enclosure designed and constructed to withstand an explosion of a specified flammable gas or vapor that may occur within it, and to prevent the ignition of flammable gas or vapor in the atmosphere surrounding the enclosure by sparks, flashes, or explosions of the specified gas or vapor that may occur within the enclosure.

NOTE—Explosionproof apparatus should bear a nationally recognized independent testing laboratory approval rating of the proper class and group consonant with the spaces in which flammable volatile liquids, flammable gases, mixtures, or highly flammable substances may be present. See Annex A.

3.7.5 general-purpose enclosure: An enclosure that primarily protects against accidental contact and slight indirect splashing but is neither dripproof nor splashproof (NEMA 1).

3.7.6 guarded enclosure: An enclosure in which all openings giving direct access to live or rotating parts (except smooth rotating surfaces) are limited in size by the structural parts or by screens, baffles, grilles, expanded metal, or other means to prevent accidental contact with hazardous parts. The openings in the enclosure shall be such that they will not permit the passage of a rod larger than 12 mm in diameter, except where the distance of exposed live parts from the guard is more than 102 mm; then, the openings may be of such shape as not to permit the passage of a rod larger than 19 mm in diameter (NEMA 1).

Copyright © 2002 IEEE. All rights reserved.
Copyright The Institute of Electrical and Electronics Engineers, Inc.
Provided by IHS under license with IEEE
No reproduction or networking permitted without license from IHS
Not for Resale

3.7.7 oilproof enclosure: An enclosure constructed so that oil vapors, or free oil not under pressure, that may accumulate within the enclosure will not prevent successful operation of, or cause damage to, the enclosed equipment (NEMA 13).

3.7.8 oiltight enclosure: An enclosure constructed so that oil vapors or free oil not under pressure, which may be present in the surrounding atmosphere, cannot enter the enclosure (NEMA 13).

3.7.9 semi-guarded enclosure: An enclosure in which all of the openings, usually in the top half, are protected as in the case of a "guarded enclosure," but the others are left open (NEMA 1).

3.7.10 splashproof enclosure: An enclosure in which the openings are so constructed that drops of liquid or solid particles falling on the enclosure or coming toward it in a straight line at any angle not greater than 100° from the vertical cannot enter the enclosure either directly or by striking and running along a surface.

3.7.11 submersible enclosure: An enclosure constructed so that the equipment within it will operate successfully when submerged in water under specified conditions of submergence depth and time (NEMA 6P).

3.7.12 waterproof enclosure: An enclosure constructed so that any moisture or water leakage that may occur into the enclosure will not interfere with its successful operation. In the case of motor or generator enclosures, leakage that may occur around the shaft may be considered permissible provided it is prevented from entering the oil reservoir and provision is made for automatically draining the motor or generator enclosure.

3.7.13 watertight enclosure: An enclosure constructed so that a stream of water from a hose not less than 25 mm in diameter under a head of 10 m from a distance of 3 m can be played on the enclosure from any direction for a period of 5 min without leakage. The hose nozzle shall have a uniform inside diameter of 25 mm. (NEMA 4 or 4X).

3.8 Control apparatus and switchgear

3.8.1 across-the-line starter: A device that connects the motor to the supply without the use of a resistance or autotransformer to reduce the voltage. It may consist of a manually operated switch or a master switch, which energizes an electromagnetically operated contactor.

3.8.2 automatic starter: A starter in which the influence directing its performance is automatic.

3.8.3 autotransformer starter: A starter that includes an autotransformer to furnish a reduced voltage for starting a motor. It includes the necessary switching mechanism and is frequently called a compensator or autostarter.

3.8.4 circuit breaker interrupting rating (rated short-circuit current): For an unfused circuit breaker, the designated limit of available (prospective) current at which the circuit breaker is required to perform its short-circuit current duty cycle at rated maximum voltage under the prescribed test conditions. This current is expressed as the rms symmetrical value envelope at a time half-cycle after short-circuit is initiated. (For dc breakers, the rated interrupting current is the maximum value of direct current.)

3.8.5 constant-torque resistor: A resistor for use in the armature or rotor circuit of a motor in which the current remains practically constant throughout the entire speed range.

3.8.6 control circuit: The circuit that carries the electric signals of a control apparatus or system directing the performance of the controller but that does not carry the main power circuit.

Copyright © 2002 IEEE. All rights reserved.

Copyright The Institute of Electrical and Electronics Engineers, Inc.
Provided by IHS under license with IEEE
No reproduction or networking permitted without license from IHS Not for Resale

3.8.7 electric controller: A device (or group of devices) that serves to govern, in some predetermined manner, the electric power delivered to the apparatus to which it is connected.

3.8.8 fan duty resistor: A resistor for use in the armature or rotor circuit of a motor in which the current is approximately proportional to the speed of the motor.

3.8.9 full magnetic controller: An electric controller having all of its basic functions performed by devices that are operated by electromagnets.

3.8.10 indicating circuit: That portion of the control circuit of a control apparatus or system that carries the results of logic functions to visual or audible devices that indicate the state of the apparatus controlled.

3.8.11 manual controller: An electric controller having all of its basic functions performed by devices that are operated by hand.

3.8.12 master switch: A switch that dominates the operation of contactors, relays, or other remotely operated devices.

3.8.13 metal-clad switchgear: A switchgear assembly that contains medium voltage, withdrawable, electrically operated power circuit breakers. Barriers and shutters are required when the circuit breakers are withdrawn. Insulated bus is required throughout. This assembly requires the separation of each compartment per circuit using grounded metal barriers. These compartments include the circuit breaker, main bus, cable termination, voltage transformers, and low-voltage wiring areas. Voltage ratings covered by this equipment are from 1.01 to 38.0 kV.

NOTE—For additional information, see IEEE Std C37.20.2-1999 or IEC 60298.

3.8.14 metal-enclosed switchgear: A switchgear assembly completely enclosed on all sides and the top with metal (except for ventilating openings and inspection widows) containing primary power circuit switching or interrupting devices, or both, with buses and connections. The assembly may include control and auxiliary devices. Doors, removable covers, or both are provided for access to the interior of the enclosure.

NOTE—For additional information, see IEEE Std C37.20-1987, IEC 60298, or IEC 60947 as applicable.

3.8.15 metal-enclosed low-voltage power circuit breaker switchgear: A switchgear assembly that contains either stationary or withdrawable low-voltage power circuit breakers in grounded metal compartments. The assembly contains bus and connections and may include auxiliary devices. It is rated for use on low-voltage systems with a maximum rating of 635 V ac (ANSI) or 1000 V ac (IEC).

NOTE—For additional information, see IEEE Std C37.20.1-1993 or IEC 60947.

3.8.16 motor control center (MCC): A group of devices assembled for the purpose of switching and protecting a number of load circuits. The control center may contain transformers, contactors, circuit breakers, protective, and other devices intended primarily for energizing or deenergizing load circuits.

3.8.17 molded-case circuit breaker: A circuit breaker assembled as an integral unit in a supporting and enclosing housing of insulating material; the overcurrent and tripping means being of the thermal type, the magnetic type, the electronic type, or a combination thereof.

3.8.18 overcurrent protection (overload protection): The effect of a device, operative on excessive current (but not necessarily on short circuit), to cause and maintain the interruption of current flow to the device governed.

--`,,`-`-`,,`,,`,`,,`---

 Copyright © 2002 IEEE. All rights reserved.

Copyright The Institute of Electrical and Electronics Engineers, Inc.
Provided by IHS under license with IEEE
No reproduction or networking permitted without license from IHS Not for Resale

3.8.19 overload relay: An overcurrent relay that functions at a predetermined value of overcurrent to cause the disconnection of the power supply.

NOTE—An overload relay is intended to protect the motor or controller and does not necessarily protect itself.

3.8.20 rated continuous current: The designed limit in rms amperes or dc amperes that a switch or circuit breaker will carry continuously without exceeding the limit of observable temperature rise.

3.8.21 resistor: A device with the primary purpose of introducing resistance into an electric circuit. (A resistor as used in electric circuits for purposes of operation, protection, or control, commonly consists of an aggregation of units. Resistors, as commonly supplied, consist of wire, metal, ribbon, cast metal, or carbon compounds supported by or embedded in an insulating medium. The insulating medium may enclose and support the resistance material as in the case of the porcelain tube type, or the insulation may be provided only at the points of support, as in the case of heavy duty ribbon or cast iron grids mounted in metal frames.)

3.8.22 semimagnetic controller: An electric controller having only part of its basic functions performed by devices that are operated by electromagnets.

3.8.23 solid-state controller: An electric controller that utilizes a static power converter as the primary switching device.

3.8.24 starter: An electric controller that is used to accelerate a motor from rest to normal speed and to stop the motor. (A device designed for starting a motor in either direction of rotation includes the additional function of reversing and should be designated a controller.)

3.8.25 step-back relay: A relay that operates to limit the current peaks of a motor when the armature or line current increases. It may, in addition, operate to remove such limitations when the cause of the high current has been removed.

3.8.26 temperature-compensated overload relay: A device that functions at any current in excess of a predetermined value essentially independent of the ambient temperature.

3.8.27 undervoltage or low-voltage protection: The effect of a device, operative on the reduction or failure of voltage, to cause and maintain the interruption of power in the main circuit.

3.8.28 undervoltage or low-voltage release: The effect of a device, operative on the reduction or failure of voltage, to cause the interruption of power to the main circuit, but not to prevent the reestablishment of the main circuit on return of voltage.

3.9 Insulation system

An assembly of insulating materials in a particular type of equipment. The class of the insulation system may be designated by letters, numbers, or other symbols. An insulation system class utilizes material having an appropriate temperature index and operates at such temperatures above stated ambient temperatures as the equipment standard specifies based on experience or accepted test data. The system may alternatively contain materials of any class, provided that experience or a recognized test procedure for the equipment has demonstrated equivalent life expectancy.

3.10 Types of circuits and terms

3.10.1 appliance branch circuit: A circuit that supplies energy to one or more outlets to which appliances are connected. These circuits have no permanently connected lighting fixtures that are not a part of an appliance.

Copyright © 2002 IEEE. All rights reserved.

Copyright The Institute of Electrical and Electronics Engineers, Inc.
Provided by IHS under license with IEEE
No reproduction or networking permitted without license from IHS Not for Resale

3.10.2 attachment plug: A device that, by insertion in a receptacle, establishes connection between the conductors of an attached cord and the conductors connected permanently to the receptacle.

3.10.3 branch circuit (or final subcircuit): That portion of a wiring system that extends beyond the final overcurrent device protecting the circuit.

3.10.4 communication and electronics circuits: Electrical circuits supplying equipment and systems for voice, sound, or data transmission, such as telephone, engine order telegraph, data communication, interior communication, paging systems, wired music systems, fire and general alarm systems, smoke and fire detection systems, closed circuit television, navigational equipment, and microprocessor-based automated alarm and control systems.

3.10.5 controller: A device or group of devices used to control in a predetermined manner the electric power delivered to the apparatus to which it is connected.

3.10.6 demand factor: The ratio of the operating load demand of a system or part of a system to the total connected load of the system or part of the system under consideration.

3.10.7 disconnecting means: A device or group of devices used to disconnect the conductors of a circuit from the source of supply.

3.10.8 distribution center (load center): Enclosed apparatus that consists of automatic protective devices connected to bus bars, to subdivide the feeder supply and provide control and protection of subfeeders or branch circuits.

3.10.9 distribution panel: A panel that receives energy from a switchboard or a distribution center and distributes power to energy-consuming devices.

3.10.10 emergency switchboard: A switchgear and control assembly that receives energy from the emergency generating plant and distributes directly or indirectly to all emergency loads.

3.10.11 feeder: A cable or set of conductors that originates at a main distribution center (main switchboard) and supplying secondary distribution centers, transformers, or motor control centers. (Bus tie circuits between generator and distribution switchboards, including those between main and emergency switchboards, are not considered as feeders.)

3.10.12 intrinsically safe circuit: A circuit in which any spark or thermal effect is incapable of causing ignition of a mixture of flammable or combustible material in air under prescribed test conditions. Test conditions generally consider opening, shorting, grounding, or field wiring, along with failures in the circuit. (See UL 913-1988 for specific information on test conditions.)

3.10.13 lighting branch circuit: A circuit that supplies energy to lighting outlets. A lighting branch circuit may also supply portable desk or bracket fans, small heating appliances, motors of 190 W and less, and other portable apparatus of not over 600 W each.

3.10.14 lighting outlet: An outlet intended for the direct connection of a lamp holder or a lighting fixture.

3.10.15 motor branch circuit: A branch circuit that supplies energy to one or more motors and associated motor controllers.

3.10.16 outlet: A point on the wiring system at which current is taken to supply utilization equipment.

Copyright © 2002 IEEE. All rights reserved.
Copyright The Institute of Electrical and Electronics Engineers, Inc.
Provided by IHS under license with IEEE
No reproduction or networking permitted without license from IHS
Not for Resale

3.10.17 power (or ship service) switchboard: A switchgear and control assembly that receives energy from the main generating plant and distributes directly or indirectly to all equipment supplied by the generating plant.

3.10.18 receptacle: A device installed in a receptacle outlet to accommodate an attachment plug.

3.10.19 receptacle outlet: An outlet where one or more receptacles is installed.

3.10.20 vital services: Services normally considered to be essential for the safety of the ship and its passengers and crew. These usually include propulsion, steering, navigation, firefighting, emergency power, emergency lighting, electronics, and communications functions. The identification of all vital services in a particular vessel is generally specified by the government regulatory agencies.

3.11 Automatic or centralized control systems

3.11.1 centralized control: The local, remote, or programmed operations of more than one equipment or system from one central control station in a common area or room by a broadly skilled operator or supervisory system.

3.11.2 computer-assisted system: A system that utilizes separate and standalone computers or processors for arithmetic computational and logic functions. All data manipulation and evaluation (e.g., alarm condition annunciation) functions are performed by the system.

3.11.3 computer-based system: A system that utilizes one or more embedded computers or processors to perform its functions.

3.11.4 control space: A dedicated area or compartment provided with equipment such as control consoles, gauge boards, control bench boards, switchboards, instrumentation, displays, control switches, communications, and other equipment for the local, remote, or programmed control and monitoring of equipment. The control system equipment may be operated by one or more individuals acting together or independently.

3.11.5 failsafe: A characteristic in which, upon failure or malfunction of a component, subsystem, or system, the output automatically reverts to a predetermined design state of least critical consequence.

NOTE—Typical failsafe states are listed in Table 2.

Table 2—Typical failsafe states

System or component	Preferred failsafe states
Cooling water valve	As is or open
Alarm system	Annunciate
Burner valve	Shutdown, limited, or as an alarm
Propulsion speed control	As is
Feedwater valve	As is or open
Controllable pitch propeller	As is
Propulsion safety trip	As is and alarm

Copyright © 2002 IEEE. All rights reserved.

Copyright The Institute of Electrical and Electronics Engineers, Inc.
Provided by IHS under license with IEEE
No reproduction or networking permitted without license from IHS
Not for Resale

3.11.6 line replaceable unit (LRU): The smallest or lowest piece of equipment or subassembly that is replaceable onboard the vessel. Systems and subsystems may contain multiple numbers of them. Typical ones include circuit cards, sealed bearings, and drive motors.

3.11.7 machinery control room: An enclosed or separated space generally located within the machinery spaces that functions as a central control station.

4. Power system characteristics

4.1 Standard systems

The following distribution systems are recognized as standard:

a) Two-wire with single-phase ac or dc
b) Three-wire with single-phase ac or dc
c) Three-phase, three-wire ac
d) Three-phase, four-wire ac

4.2 Standard voltages

The following voltages are recognized as standard, as shown in Table 3.

Table 3—Standard voltages

Standard	AC (V)	DC (V)
Power utilization	115-200-220-230-350-440-460-575-660-2300-3150-4000-6000-10600-13200	115 and 230
Power generation	120-208-230-240-380-450-480-600-690-2400-3300-4160-6600-11000-13800	120 and 240

4.3 Standard frequency

For ac lighting and power systems, 50 Hz and 60 Hz are standard frequencies.

4.4 Selection of voltage and system type

For small vessels having minimal power apparatus (up to 15 kW), 120-V, three-phase or single-phase generators may be used, with 115-V, three-phase or single-phase distribution for power and lighting. Single-phase lighting feeders should be balanced at the switchboard to provide approximately equal load on the three-phase system.

For intermediate-size vessels with power apparatus (up to 100 kW), generators may be 230-V, three-phase or 240-V, three-phase; the power utilization at 220 V or 230 V three-phase, respectively; and lighting distribution at 120-V, three-phase, three-wire or 208/120-V three-phase, four-wire. Power and lighting utilization should be at 200/115 V, three-phase.

Copyright © 2002 IEEE. All rights reserved.
Copyright The Institute of Electrical and Electronics Engineers, Inc.
Provided by IHS under license with IEEE
No reproduction or networking permitted without license from IHS
Not for Resale

For large vessels of a size and type that require a dual-voltage system (two systems isolated by transformers operating at different voltages), first consideration should be given to 450-V, 480-V, 600-V, or 690-V generation with power utilization at 440 V, 460 V, 575 V, or 660 V, respectively, and lighting distribution at 120-V or 230-V three-phase, three-wire or 120/208-V, three-phase, four-wire.

For vessels having a very large electrical system requiring higher voltage power generation, consideration should be given to generating at 13,800 V, 11,000 V, 6600 V, 4160 V, 3300 V, or 2400 V with some power utilization at 13,200 V, 10,600 V, 6000 V, 4000 V, 3150 V, or 2300 V, three-phase, respectively, with lower utilization voltages to be derived from transformers.

For vessels requiring dc power generation, and having little power apparatus, 120-V dc generators are recommended with a 115-V dc lighting and power distribution system. Where an appreciable amount of dc power apparatus is provided, 240/120-V dc, three-wire generators and 230-V dc power distribution system and 230/115-V dc three-conductor lighting feeders may be selected. Branch circuits from lighting panelboards should be 115-V dc two-wire.

4.5 AC power system characteristics

Power distribution systems should maintain the system characteristics described in Table 4 under all operating conditions. Power-consuming equipment should operate satisfactorily under the conditions described in Table 4, and it should be designed to withstand the power interruption, transient, electromagnetic interference (EMI), radio frequency interference (RFI), and insulation resistance test conditions inherent in the system. Power-consuming equipment requiring a nonstandard voltage or frequency for successful operation should have integral power conversion capability. Power-consuming equipment should not have inherent characteristics that degrade the power quality of the supply system described in Table 4.

Table 4—Alternating current (ac) power characteristics

Characteristics	Limits
Frequency	
a) Nominal frequency	50/60 Hz
b) Frequency tolerances	± 3%
c) Frequency modulation	½%
d) Frequency transient:	
1) Tolerance	± 4%
2) Recovery time	2 s
e) The worst-case frequency excursion from nominal frequency resulting from item b), item c), and item d) 1) combined, except under emergency conditions	5 ½%

Copyright © 2002 IEEE. All rights reserved.

Copyright The Institute of Electrical and Electronics Engineers, Inc.
Provided by IHS under license with IEEE
No reproduction or networking permitted without license from IHS
Not for Resale

Table 4—Alternating current (ac) power characteristics *(continued)*

Characteristics	Limits
Voltage	
a) User voltage tolerance:	
1) Average of the three line-to-line voltages	± 5%
2) Any one line-to-line voltage, including item a) 1) and line voltage unbalances item b)	± 7%
b) Line voltage unbalance	
c) Voltage modulation	
d) Voltage transient:	
1) Voltage transient tolerances	3%
2) Voltage transient recovery time	5%
e) Voltage spike (peak value includes fundamental)	± 16%
f) The maximum departure voltage resulting from item a) 1) and item d) combined, except under transient or emergency conditions	2 s ± 2500 V (380-600 V) system 1000 V (120-240 V) system
g) The worst-case voltage excursion from nominal user voltage resulting from item a) 1), item a) 2), and item d) 1) combined, except under emergency conditions	± 6% ± 20%
Waveform voltage distortion[a]	
a) Maximum total harmonic distortion	5%
b) Maximum single harmonic	3%
c) Maximum deviation factor	5%
Emergency conditions	
a) Frequency excursion	–100 to + 12%
b) Duration of frequency excursion	Up to 2 min
c) Voltage excursion	–100 to + 35%
d) Duration of voltage excursion:	
1) Lower limits (–100%)	Up to 2 min
2) Upper limit (+ 35%)	2 min

Copyright © 2002 IEEE. All rights reserved.
Copyright The Institute of Electrical and Electronics Engineers, Inc.
Provided by IHS under license with IEEE
No reproduction or networking permitted without license from IHS
Not for Resale

Table 4—Alternating current (ac) power characteristics *(continued)*

Characteristics	Limits
Definitions: a) Frequency 1) Nominal frequency: The designated frequency in Hertz. 2) Frequency tolerance: The maximum permitted departure from nominal frequency during normal operation, excluding transient and cyclic frequency variations. It includes variations caused by load changes, environment (temperature, humidity, vibration, inclination), switchboard meter error, and drift. Tolerances are expressed in percentage of nominal frequency. 3) Frequency modulation: The permitted periodic variation in frequency during normal operation that might be caused by regularly and randomly repeated loading. For purposes of definition, the periodicity of frequency modulation should be considered as not exceeding 10 s. $$\text{Frequency Modulation (\%)} = \frac{\{f_{\text{maximum}} - f_{\text{minimum}}\}}{\{2 \times f_{\text{nominal}}\}} \times 100$$ 4) Frequency transient tolerance: A sudden change in frequency that goes outside the frequency tolerance limits, returns to, and remains inside these limits within a specified recovery time after initiation of the disturbance. Frequency transient tolerance is in addition to frequency tolerance limits. 5) Frequency transient recovery time: The time period from the start of the disturbance until the frequency recovers and remains within frequency tolerance limits.	
b) Voltage 1) User voltage tolerance: The maximum permitted departure from nominal user voltage during normal operation, excluding transient and cyclic voltage variations. It includes variations such as those caused by load changes, environment (temperature, humidity, vibration, inclination), switchboard meter error, and drift.	

Copyright © 2002 IEEE. All rights reserved.

Copyright The Institute of Electrical and Electronics Engineers, Inc.
Provided by IHS under license with IEEE
No reproduction or networking permitted without license from IHS
Not for Resale

Table 4—Alternating current (ac) power characteristics *(continued)*

Characteristics	Limits
2) Line voltage unbalance tolerance (three-phase system): The difference between the highest and lowest line-to-line voltages. $\text{Line Voltage Unbalance Tolerance (\%)} = \frac{\{E_{\text{maximum}} - E_{\text{minimum}}\}}{\{E_{\text{nominal}}\}} \times 100$ 3) Voltage modulation (amplitude): The periodic voltage variation (peak to valley) or the user voltage that might be caused by regularly or randomly repeated pulsed loading. The periodicity or voltage modulation is considered to be longer than 1 Hz and less than 10 s. Voltages used in the following equation shall be all-peak or all-rms: $\text{Voltage Modulation (\%)} = \frac{\{E_{\text{maximum}} - E_{\text{minimum}}\}}{\{2 \times E_{\text{nominal}}\}} \times 100$ 4) Voltage transient i) Voltage transient tolerance: A sudden change (excluding spikes) in voltage that goes outside the user voltage tolerance limits and returns to and remains within these limits within a specified recovery time longer than 1 ms after the initiation of the disturbance. The voltage transient tolerance is in addition to the user voltage tolerance limits. ii) Voltage transient recovery time: The time elapsed from initiation of the disturbance until the voltage recovers and remains within the user voltage tolerance limits. 5) Voltage spike: A voltage change of very short duration (less than 1 ms).	
c) Waveform 1) Total Harmonic Distortion (THD) (of a sine wave): The ratio in percentage of the rms value of the residue (after elimination of the fundamental) to the rms value of the fundamental. 2) Single Harmonic (of a sine wave): The ratio in percentage of the rms value of that harmonic to the rms value of the fundamental. 3) Deviation Factor (of a sine wave): The ratio of the maximum difference between corresponding ordinates of the wave and of the equivalent sine wave to the maximum ordinate of the equivalent sine wave when the waves are superimposed in such a way that they make the maximum difference as small as possible. $\text{Derivation factor (\%)} = \frac{\{\text{maximum deviation}\}}{\{\text{maximum ordinate of the equivalent sine wave}\}} \times 100$ d) Emergency conditions 1) A situation or occurrence of a serious nature that may result in electrical power system interruptions or deviations, such as the occurrence of ship service generator failure and the emergency generator coming on line.	

[a]For ships with electric propulsion or other adjustable speed drive loads, higher voltage distortion can be accepted on a dedicated power bus if the equipment connected to the dedicated power bus is designed and tested for the actual conditions.

Copyright © 2002 IEEE. All rights reserved.
Copyright The Institute of Electrical and Electronics Engineers, Inc.
Provided by IHS under license with IEEE
No reproduction or networking permitted without license from IHS
Not for Resale

4.6 Power quality and harmonics

Solid state devices such as motor controllers, computers, copiers, printers, and video display terminals produce harmonic currents. These harmonic currents may cause additional heating in motors, transformers, and cables. The sizing of protective devices should consider the harmonic current component. Harmonic currents in nonsensically current waveforms may also cause EMI and RFI. EMI and RFI may result in interference with sensitive electronics equipment throughout the vessel.

Isolation, both physical and electrical, should be provided between electronic systems and power systems that supply large numbers of solid state devices, or significantly sized solid state motor controllers. Active or passive filters and shielded input isolation transformers should be used to minimize interference. Special care should be given to the application of isolation transformers or filtering as the percentage of power consumed by solid state power devices compared with the system power available increases. Small units connected to large power systems exhibit less interference on the power source than do larger units connected to the same source. Solid state power devices of vastly different sizes should not share a common power circuit. Where kilowatt ratings differ by more than 5 to 1, the circuits should be isolated by a shielded distribution system transformer. Surge suppressors or filters should only be connected to power circuits on the secondary side of the equipment power input isolation transformers.

To reduce the effects of radiated EMI, special considerations on filtering and shielding should be exercised when main power switchboards and propulsion motor drives are installed in the same shipboard compartment as ship service switchboards or control consoles.

IEEE Std 519™-1992 provides additional recommendations.

5. Power system design

5.1 General

For the purposes of this document, distribution will include all electrical devices after the switchboard load terminals and before the electrical load power terminals. A distribution system includes, but is not limited to, all power transformers, automatic bus transfer switches, motor control centers, load centers, distribution panels, controllers, feeders, and branch circuits. The distribution system does not include generators, switchboards, and electrical loads.

Shipboard electrical systems may have distribution systems for power, lighting, interior communications, and control systems. Electrical systems can be fed from the ship service generators, emergency generators, or a combination of both. Power for normal lighting should be distributed from the ship's service switchboard. Power for emergency lighting, interior communications, and electronics systems feeders should be distributed from the emergency switchboard. Alternatively, interior communications and electronics systems providing vital services may be supplied utilizing dual feeders via an ABT system from the ship's service and emergency switchboards. (See Figure 1, Figure 2, Figure 3, and Figure 4.)

Where more than one power source (generator and or shore power) is available and the sources are not intended to operate in parallel, a mechanical or electrical interlock to prevent paralleling should be provided.

Copyright © 2002 IEEE. All rights reserved.

Copyright The Institute of Electrical and Electronics Engineers, Inc.
Provided by IHS under license with IEEE
No reproduction or networking permitted without license from IHS
Not for Resale

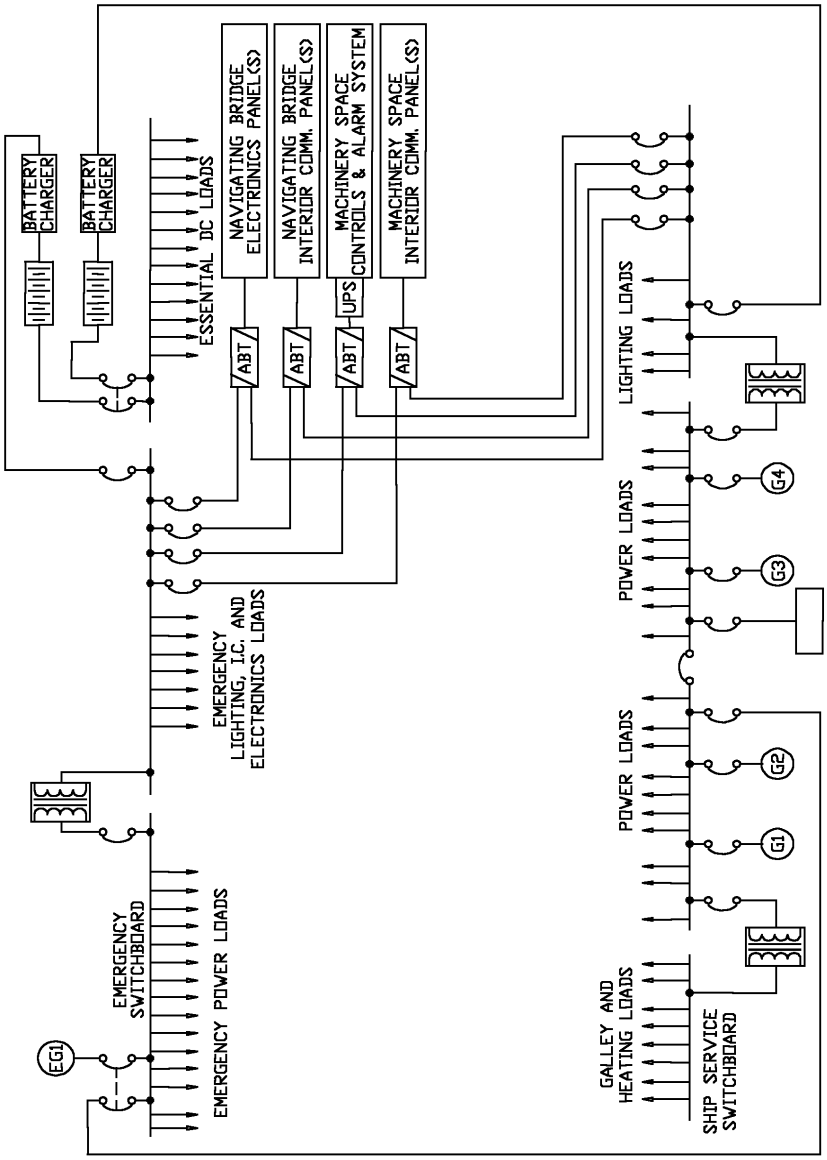

Figure 1—Typical electric plant configuration—cargo vessels

Copyright © 2002 IEEE. All rights reserved.
Copyright The Institute of Electrical and Electronics Engineers, Inc.
Provided by IHS under license with IEEE
No reproduction or networking permitted without license from IHS
Not for Resale

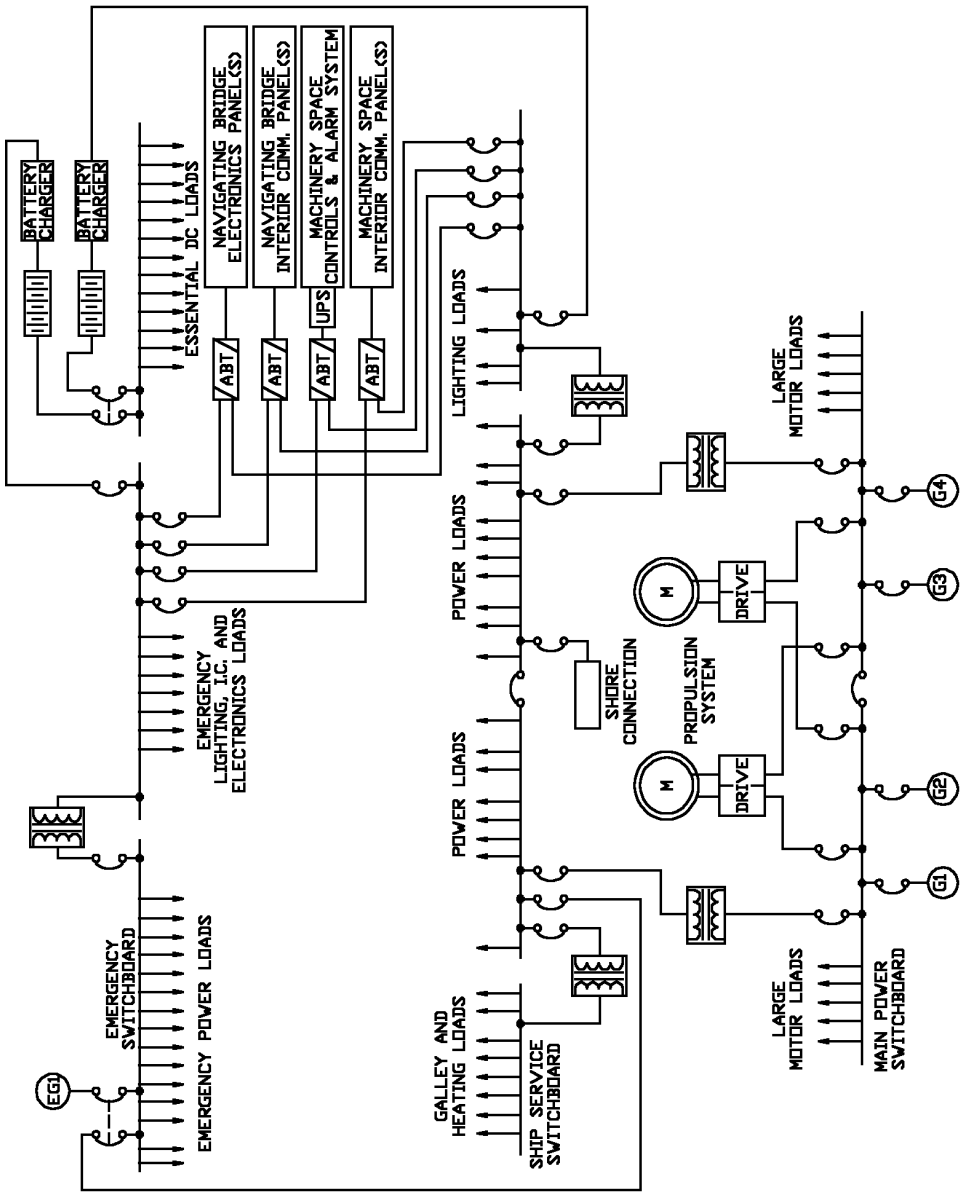

Figure 2—Typical integrated electric plant confirmation—cargo vessels

Copyright © 2002 IEEE. All rights reserved.

Copyright The Institute of Electrical and Electronics Engineers, Inc.
Provided by IHS under license with IEEE
No reproduction or networking permitted without license from IHS
Not for Resale

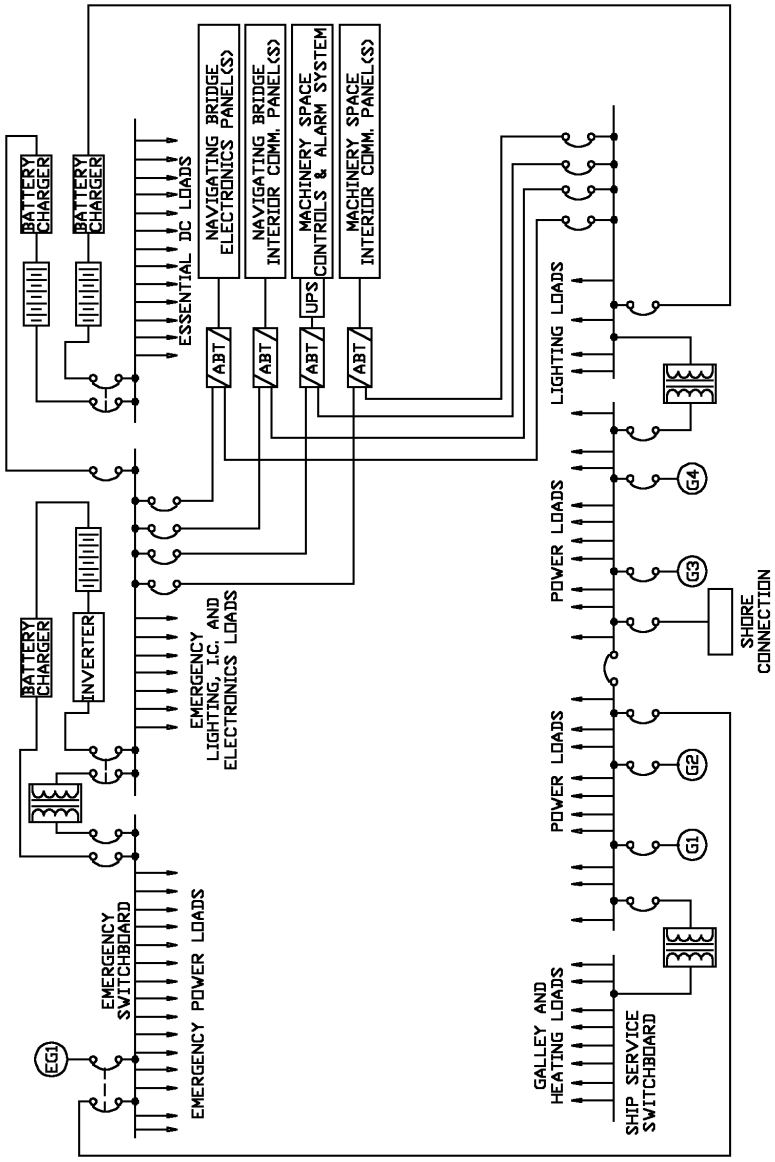

Figure 3—Typical electric plant configuration—passenger vessels

Copyright © 2002 IEEE. All rights reserved.
Copyright The Institute of Electrical and Electronics Engineers, Inc.
Provided by IHS under license with IEEE
No reproduction or networking permitted without license from IHS
Not for Resale

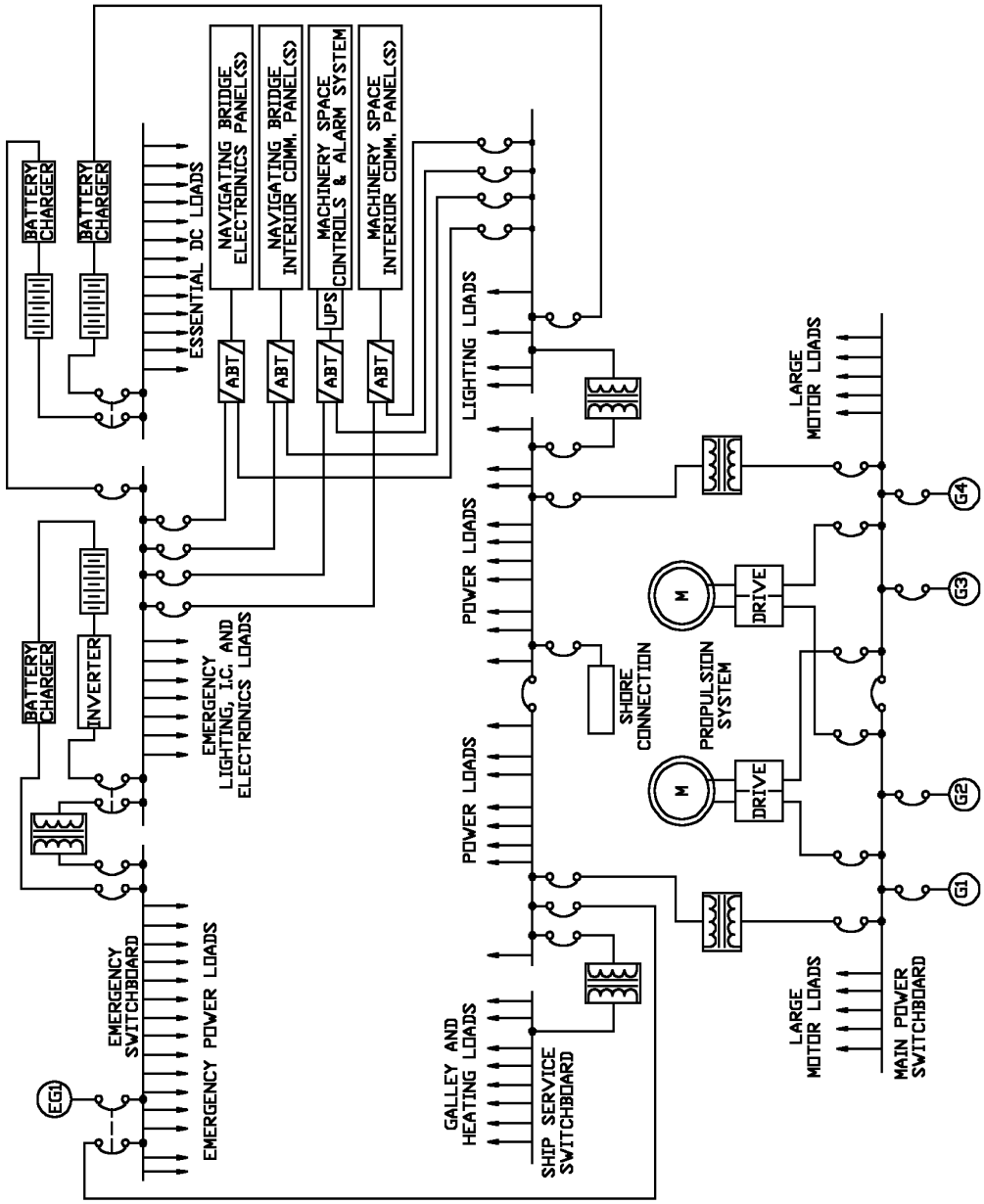

Figure 4—Typical integrated electric plant configuration—passenger vessels

Copyright © 2002 IEEE. All rights reserved.

Copyright The Institute of Electrical and Electronics Engineers, Inc.
Provided by IHS under license with IEEE
No reproduction or networking permitted without license from IHS
Not for Resale

5.2 Circuit elements

All normal current-carrying elements of electrical power supply circuits should be specifically intended for that purpose only. Ship structure should not be used as a normal current-carrying conductor for the electrical power supply distribution systems.

5.3 Shore power

If a shore power connection is provided, a connection box (see 17.7) should be installed in a location convenient for the reception of the cables from the shore. The shore power system should include shore power circuit breaker(s), shore power available indicating light(s), and a phase sequence or phase rotation detection device. Cables from the connection box to the ship service switchboard should be permanently installed. One of the switchboard voltmeters should have the capability to indicate the shore power voltage.

5.4 Demand factors

5.4.1 General

Feeder and branch circuit conductors should be sized for 100% of their connected load, except as given in 5.4.2., 5.4.3, and 5.4. Conductor sizing should be based on published ampacity ratings for the conductors, with applicable derating factors applied for ambient temperature, raceway configuration, and so on. See Clause 24 for additional information. Conductors less than 15 AWG (1.5 mm^2 for IEC wiring systems; see 1.7) should not be used in any branch circuit.

5.4.2 Lighting, interior communications, and electronics circuits

Conductors for lighting, communications, and electronics circuits should be sized for the total connected load, including not less than 180 VA for each receptacle. The connected load should include 50% of the rating of spare circuits on switchboards or load centers and the average active circuit load for the spare circuits on distribution panels. Loads for circuits supplying electric discharge-type lamps should be computed on the basis of ballast input current. Feeders for circuits including cargo flood lighting receptacles should be calculated on the basis of expected load, but not less than 300 W per receptacle.

5.4.3 Galley circuits

Conductors for galley equipment should be sized on the basis of 100% demand factor for the first 50 kW of connected load and 65% of the connected load in excess of 50 kW.

5.4.4 Individual and multiple motor circuits

Except as recommended in 5.8.1, conductors supplying an individual motor should have a continuous current-carrying capacity equal to 125% of the motor nameplate rating. Conductors supplying more than one motor should have a continuous current-carrying capacity equal to 125% of the largest motor plus the sum of the nameplate ratings of all other motors supplied, including 50% of the rating of spare switches on the distribution unit.

Conductors supplying a group of three or more workshop tool motors should have a continuous current-carrying capacity equal to 125% of the nameplate rating of the largest motor plus 50% of the sum of the nameplate ratings of all other motors of this group.

Copyright © 2002 IEEE. All rights reserved.
Copyright The Institute of Electrical and Electronics Engineers, Inc.
Provided by IHS under license with IEEE
No reproduction or networking permitted without license from IHS
Not for Resale

Conductors supplying two or more motors driving deck cargo winches or cargo elevators should have a continuous current-carrying capacity equal to 125% of the largest motor plus 50% of the sum of the nameplate ratings of all other motors.

Conductors supplying two or more motors driving cargo cranes should have a continuous current-carrying capacity equal to 125% of the largest motor plus 50% of the sum of the nameplate rating of all other motors. Where the conductor supplies two or more motors associated with a single crane, the current-carrying capacity should be equal to 125% of the largest motor plus 45% of the sum of the nameplate rating of the other motors.

Conductors between separate ship service switchboards having connected generators (ship service generator switchboards) should be sized on the basis of 75% of the switchboard having the greatest generating capacity. The drop in voltage from each generator to its switchboard should not exceed 1%, and the drop in voltage between switchboards should not exceed 2%.

Conductors between ships service switchboards and the emergency switchboard should be sized on the basis of the maximum operating load of the emergency switchboard or 115% of the emergency generator capacity, whichever is larger.

Conductors from storage batteries to the point of distribution should be sized for the maximum continuous charge or discharge rate, whichever is greater. Battery conductors for heavy duty applications, such as diesel starting, should be sized for 125% of maximum-rated battery discharge.

5.5 Voltage drop

5.5.1 General

For all distribution circuits, unless stated otherwise, the combined maximum voltage drop from the ship's service switchboard to any point in the system should not exceed 5%.

5.5.2 Feeder and branch circuit continuity

Except as permitted in 5.5.3 and 5.6.1, each feeder and branch circuit supplying a single energy-consuming appliance should be continuous and uniform in size throughout its length. In instances of feeders of large size and exceptional length, junction boxes or splices may be used for ease of installation. When authorized by the appropriate regulatory agency, splices or junction boxes may be permitted to repair damaged cable (see 25.11).

5.5.3 Feeder connections

Where a feeder supplies more than one distribution panel, it may be continuous from the switchboard to the farthest panel or it may be interrupted at any intermediate panel. If the bus bars of any distribution panel carry "through" load, the size of the buses should be suitable for the total current. The size of feeder conductors will ordinarily be uniform for the total length but may be reduced at any intermediate distribution panel, provided that the smallest section of the feeder is protected by the overload device at the distribution switchboard.

5.6 Lighting distribution

5.6.1 Lights controlled from the navigating bridge

A separate feeder should be provided for all lights supplied from the emergency switchboard and located in or controlled from the navigating bridge. On passenger vessels, two feeders may be provided: one from the

Copyright © 2002 IEEE. All rights reserved.

Copyright The Institute of Electrical and Electronics Engineers, Inc.
Provided by IHS under license with IEEE
No reproduction or networking permitted without license from IHS Not for Resale

temporary emergency (storage battery) bus and one from the final emergency bus. For the feeder supplying navigation lights (from the temporary emergency bus, if provided), the rating of the cable and of the fuse or circuit breaker on the emergency switchboard should be not less than 20 A or not less than 125% of connected load, including allowance for spare circuits, whichever is greater.

One or more distribution panels may be served by the feeders described in this subclause. Through feed, without switch or overcurrent protection, should be provided for the navigation light panel. For all other lights, including any navigation or signal lights not supplied by the navigation light panel, branch circuits, each with a fused-switch or circuit breaker, should be provided.

Floodlights for lifeboat launching should be supplied by branch circuits from the navigating bridge emergency panel, or it may be supplied directly from the emergency system through local lighting contactors controlled from the navigating bridge. Lighting for adjacent launching stations should be supplied by different branch circuits.

One four-conductor, or two-conductor, branch circuit cables should be provided from the navigation light indicator panel for each two-lamp navigation light fixture. Each four-conductor branch circuit cable from the indicator panel should terminate in a waterproof two-circuit, two-gang receptacle located adjacent to the running light. If two-conductor branch circuit cables are provided, each cable should terminate in a single-gang waterproof receptacle. The receptacles should be of the grounding type. Two three-conductor portable cables should be provided for each two-lamp fixture, and each should be fitted with a three-pole plug.

5.6.2 Machinery space lighting

Separate lighting feeders should be installed for each main and auxiliary machinery space. These feeders should not supply fixtures outside the machinery spaces, other than storerooms opening into these spaces. The number and size of the feeders and distribution panels should be determined by the number of fixtures and the extent of the spaces covered. It is recommended that alternate groups of fixtures within these spaces be so arranged that the failure of any one circuit will not leave these spaces in darkness.

5.6.3 Cargo space lighting

Separate feeders should be installed for all cargo lighting. The distribution panels should be located outside of the cargo spaces. Receptacles in cargo spaces should be connected neither to feeders that are used for lighting nor to circuits required for the underway operation of the vessel.

5.6.4 Accommodation space lighting

For vessels provided with structural fire boundary bulkheads forming fire zones, it is recommended that at least two separate feeders be provided exclusively for each vertical zone between two fire boundary bulkheads. These feeders may serve all decks within the zone. One of these may be the emergency lighting feeder. The supply of lights in all passageways and public spaces and in any berthing compartment accommodating more than 25 persons should be divided between two feeders so that if either fails, there will be sufficient light to prevent panic and to permit people to find their way to the open deck. The two feeders serving one compartment should be separated as widely as practicable to minimize the possibility of damage to both from a fire or other casualty.

On passenger vessels, electric service to each passenger stateroom should be supplied by at least two separate branch circuits connected to the general lighting system. The lighting should be so divided that in the event of failure of one branch circuit, there will be sufficient light to permit use of the space.

Copyright © 2002 IEEE. All rights reserved.
Copyright The Institute of Electrical and Electronics Engineers, Inc.
Provided by IHS under license with IEEE
No reproduction or networking permitted without license from IHS
Not for Resale

5.6.5 Two-wire device connections

In grounded systems, the shell of all lampholders should be connected to the grounded conductor, and all single-pole switches should be in the ungrounded conductor. In two-wire ungrounded systems, the color of conductors connected to single-pole switches should be uniform throughout the system.

5.7 Distribution for power equipment

In general, power feeders for cargo elevators, cargo cranes, and cargo winches that should be disconnected when the vessel is underway should not be used to supply ventilation fans, heaters, drainage pump motors, or any apparatus required for the ship's operation.

Separate feeders from switchboards should be run for main and auxiliary machinery space loads, motors for cargo-handling gear, steering gear, navigation and electronics loads, searchlights, and ventilation and air-conditioning loads. Cargo ventilation fans, machinery space ventilation fans, and fans for ventilation of accommodations should not be supplied from the same feeder.

The steering gear motors should be supplied from two different circuits and, where practical, from two different switchboards or switchboard bus sections. These circuits should be widely separated to minimize failure of both feeders due to collision, fire, or other casualty. Both feeders may be connected to the ship service switchboard, or where required by the regulatory agencies, one feeder may be connected to the ship service switchboard and one to the emergency switchboard. Each circuit should have a continuous current-carrying capacity of not less than 125% of the rating of the motor or motors simultaneously operated. The special requirements for electrical power distribution to steering gear systems are described in 32.5.2.

In order to prevent the spread of fire, arrangements should be made to permit stopping all ventilation fans, fuel oil pumps, and lube oil transfer pumps from a central point. For further details, see 11.7.

Separate feeders and distribution panels should be provided for air heaters when they are used extensively. Separate feeders and distribution panels should be provided for galleys equipped with electric ranges, ovens, and other electric apparatus.

5.8 Branch circuits

5.8.1 General

The branch circuit conductors should not be less than No. 15 AWG (1.5 mm^2 for IEC wiring systems; see 1.7). Cable types and sizes (refer to Clause 24) should be selected for compatibility with all local environmental conditions throughout the length and voltage drop limitations of this subclause. Each branch circuit should be provided with overcurrent protection in accordance with 5.9.5, except as otherwise indicated. The maximum connected load should neither exceed the rated current-carrying capacity of the cable nor 80% of the overcurrent protective device setting or rating.

5.8.2 Heating and cooking equipment

Generally, a separate branch circuit should be provided for each electric heater. An individual heater or a group of heaters may be supplied from a lighting or power distribution panel, depending on the required voltage.

For ranges, bake ovens, and similar galley units in which self-contained or locally mounted protective devices are provided for each individually controlled heating element, only one branch circuit need be provided for each assembled unit.

Copyright © 2002 IEEE. All rights reserved.

Copyright The Institute of Electrical and Electronics Engineers, Inc.
Provided by IHS under license with IEEE
No reproduction or networking permitted without license from IHS
Not for Resale

5.8.3 Motors

A separate branch circuit should be provided for each fixed motor having a full-load current rating of 6 A or more, and the conductors should have a carrying capacity of not less than 125% of the motor full-load current rating. Any branch circuit conductor should not be less than No. 15 AWG (1.5 mm^2 for IEC wiring systems; see 1.7).

5.8.4 Fixed appliances

Fixed appliances may be supplied by branch circuits from galley, lighting, or power distribution panels according to availability. However, no lighting or receptacle outlets should be served by the same branch circuits serving fixed appliances. Indicating lights in or on any appliance may be considered as being protected by the branch circuit fuse or circuit breaker.

5.8.5 Receptacles

Receptacles installed on a 15-A branch circuit protective device, shall be rated 15 A, maximum. For 20-A circuits containing more than one receptacle, 15-A rated receptacles may be used. Circuits of 30 A or higher and containing more than one receptacle should use receptacles rated at no less than the circuit rating. Receptacles should not supply a total load of portable and stationary equipment in excess of 80% of the branch circuit protective device rating.

Receptacle outlets in passages and public spaces for vacuum cleaners, in galleys for motor driven scrubbers, in laundries for pressing irons, in shops for special portable motor-driven tools, or for any similar special application should be of the heavy duty type and on separate branch circuits, with no other outlets connected. Receptacle outlets in machinery spaces should be on separate branch circuits supplied from lighting distribution panels. In auxiliary machinery compartments where there are not more than two receptacles, the receptacles may be connected to a lighting distribution circuit.

Where portable motors that operate on other than the ship's normal lighting voltage are used, the receptacles voltage should be permanently identified. The receptacles should be of a type that will not permit attaching equipment for which the voltage is unsuitable.

5.8.6 Lighting

Lighting branch circuits should be single-phase circuits supplied from panelboards and provided with overcurrent protection devices rated at 15 A, 20 A, 25 A, or 30 A. On ungrounded systems, switches and overcurrent protective devices shall be two-pole. On grounded systems, single pole switches and overcurrent protective devices are acceptable.

Three-phase lighting branch circuits may be used for special purposes such as clusters of floodlights and large multilamp lighting fixtures. Switches for such circuits should open all conductors of the circuit.

AC general-use snap switches should have a minimum rating equal to the load controlled. AC/DC general-use snap switches for use with tungsten filament lamp loads should have a minimum rating equal to the load controlled and the inrush current. Lighting fixtures for use on 25-A and 30-A circuits should be heavy duty type rated not less than 750 W (1 HP). The total single-phase branch circuit load should be balanced as far as practicable at the connection point to the three-phase system. Any imbalance should not exceed 15%.

In general, motors larger than 190 W should not be connected to lighting circuits.

Copyright © 2002 IEEE. All rights reserved.
Copyright The Institute of Electrical and Electronics Engineers, Inc.
Provided by IHS under license with IEEE
No reproduction or networking permitted without license from IHS
Not for Resale

5.9 System protection

5.9.1 General

Careful consideration must be given to short-circuit protection and to the selection of the various protective devices to ensure proper interrupting capacity and coordination regardless of their location in the vessel.

Feeder and branch circuits for lighting, heating, and ship service power distribution should each have an ungrounded conductor protected by a circuit breaker or fuse of suitable interrupting capacity.

The selection, arrangement, and performance characteristics of the various overcurrent protective devices should be as recommended herein, and should provide continuity of service under fault conditions through the selective operation of the various protective devices, that is, the isolation of a fault with the least interruption of vital services. See 3.10.20 for the definition of vital services.

The overcurrent protective devices should also provide high-speed clearance of low-impedance faults for ac systems and low resistance faults for dc systems in order that fault currents of large magnitude will cause minimum damage to the system and equipment and minimize hazards. The overcurrent protective devices should also protect electric apparatus and circuits from damage under fault conditions through the coordination of the electrical and thermal characteristics of the circuit or apparatus and the tripping characteristics of the protective devices.

In order to achieve these basic objectives, each protective device should have an interrupting rating not less than the maximum short-circuit current available at the point at which the device is installed. Selective tripping should be provided between generator, bus tie, bus feeder, and feeder protective devices. In circuits supplying vital services, selective tripping should also be provided between feeder and branch circuit protective devices. A short-circuit on a circuit that is vital to the propulsion, control, or safety of the vessel should be cleared only by the protective device that is closest to the point of the short-circuit. A short-circuit on a circuit that is not vital to the propulsion, control, or safety of the vessel should not trip equipment that is vital.

Protective devices should be applied so that single-phase operation of any three-phase connected ac motor will be precluded. Protective devices should not be used beyond their interrupting capacity.

5.9.2 AC systems

The maximum available short-circuit current should be determined from the aggregate contribution of all generators that can be simultaneously operated in parallel and the maximum number of motors that will be in operation. The maximum short-circuit current is calculated assuming a three-phase fault on the load terminals of the protective device. If the system is grounded and the zero sequence impedance is lower than the positive sequence impedance, a line-to-ground fault should be calculated in place of the three-phase fault. The protective device selected should have withstand and interrupting capabilities, including peak current capability, that exceed these calculated. Circuit breakers rated on a symmetrical basis should be applied on the basis of the symmetrical rms fault current. The system power factor at point of application should be greater than the power factor used in establishing the circuit breaker symmetrical rating. If it is not, consideration needs to be given to the circuit breaker's capability to withstand the asymmetrical value. The asymmetrical rms values of current can be obtained by applying the K_1 and K_2 factors of Figure 4 to the symmetrical values. The X/R ratio of Figure 4 is determined from the inductive reactance (X) and the resistance (R) of the circuit under consideration.

Copyright © 2002 IEEE. All rights reserved.

Copyright The Institute of Electrical and Electronics Engineers, Inc.
Provided by IHS under license with IEEE
No reproduction or networking permitted without license from IHS
Not for Resale

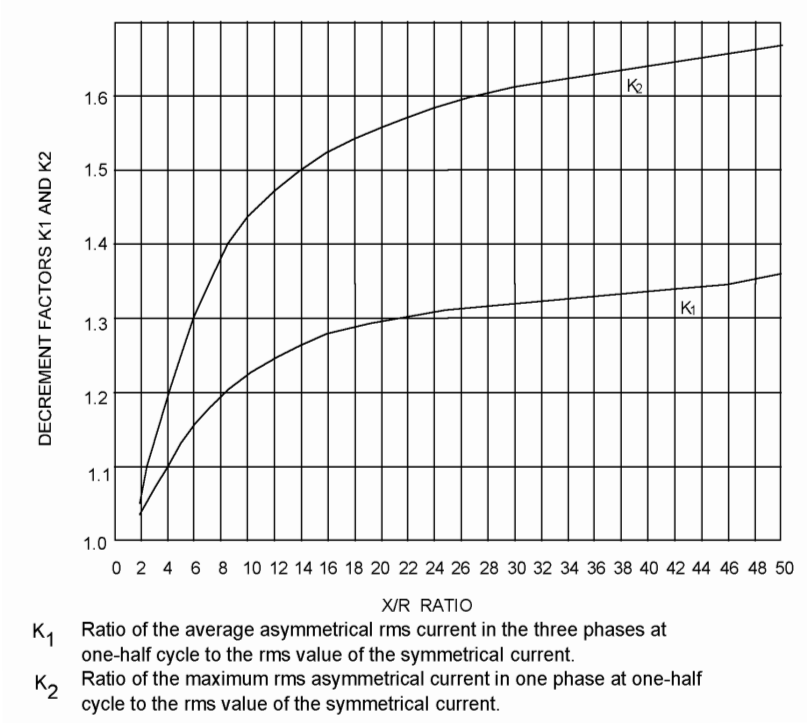

Figure 4—Fault-current decrement conversion factors

The short-circuit currents should be determined on the following basis:

a) Maximum asymmetrical rms current: Generator contribution based on circuit impedance, including direct-axis subtransient reactance of generators. Motor contribution based on four times the rated current of induction motors.
b) Average asymmetrical rms current: Generator contribution based on circuit impedances, including direct-axis subtransient reactance of generators. Motor contribution based on 3.5 times the rated current of motors.
c) Estimated short-circuit currents: For a preliminary estimate of short-circuit currents, pending the availability of generator reactances, the following may be used for estimating the generator contribution:
    1) Maximum asymmetrical rms current: 10 times generator full-load current.
    2) Average asymmetrical rms current: 8.5 times generator full-load current.

NOTE—These values for estimating generator contribution should not be used where unusually stringent transient voltage dip limitations have been specified for the generator.

d) Minimum short-circuit current: The minimum available short-circuit current should also be determined to ensure that selectivity and fault clearing will be obtained under these conditions. The minimum short-circuit current is based on the least number of generators in operation and no motor load for a phase-to-phase fault at the load end of the cable connected to the protective device on an ungrounded system.

Copyright © 2002 IEEE. All rights reserved.
Copyright The Institute of Electrical and Electronics Engineers, Inc.
Provided by IHS under license with IEEE
No reproduction or networking permitted without license from IHS
Not for Resale

5.9.3 DC systems

When calculating the maximum short-circuit current, it should be assumed that each generator that can be simultaneously operated in parallel will, if limited only by internal resistance, contribute 10 times its normal rated current and that all motors that may be in operation simultaneously will, limited by internal resistance, contribute six times their combined normal ratings.

5.9.4 Fault-current calculations and overcurrent protective devices

In addition to the calculation of available short-circuit currents for three-phase faults specified in 5.9.2, calculations should be made of available short-circuit currents for line-to-ground faults on a grounded system. The recommendations of 5.9.5 and 7.5 should also be considered in regard to the provision of overcurrent protective devices for each ungrounded conductor.

5.9.5 Overcurrent protection

5.9.5.1 Conductors

Except as otherwise recommended in 7.5 and 32.5, overcurrent protection by fuses or circuit breakers should be provided for all ungrounded conductors. Fuses should not, and circuit breaker overcurrent trips need not, be provided for the neutral conductor of a three-wire grounded system, but provision should be made for feeder disconnect including the neutral.

The purpose of overcurrent protection for conductors is to open the electric circuit if the current reaches a value that will cause an excessive or dangerous temperature in the conductor or conductor insulation. A grounded conductor is protected from overcurrent if a protective device of a suitable rating or setting is in each ungrounded conductor of the same circuit.

5.9.5.2 Fixture wires and cords

Each lighting branch circuit should be protected by an overcurrent device rated at 20 A or less. Each lighting branch circuit cable should have a continuous current rating equal to or greater than the overcurrent device setting. Fixtures connected to circuits of 15 A or less should have fixture wire or flexible cord of No. 18 AWG (0.82 mm^2) or larger. Fixtures connected to 20-A circuits should have fixture wire or flexible cord of No. 14 AWG (2.5 mm^2) or larger.

5.9.5.3 Motor branch circuits

For motor branch circuits, overcurrent protection can be provided by fuses or circuit breakers. Refer to 10.1 and 32.5 for recommended overload protection of motors. For a circuit breaker protecting an ac motor branch circuit, the recommended rating (or setting, if adjustable) of the long time-delay trip element is from 115% to 125% of full-load motor current unless the inertia of the load, the characteristics of the motor, the tripping characteristic of the circuit breaker itself, or other factors necessitate a higher rating. The minimum rating should be 115% of full-load motor current. Refer to Table 5. Motors having a power rating exceeding 0.5 kW should be individually protected against overload. See 10.1 and 32.5.

The protective devices should be designed to allow current to pass during the normal accelerating period of motors according to the conditions corresponding to normal use. When the time-current characteristics of the overload-protective device of a motor are not adequate for the starting period of the motor, the overload-protective device may be rendered inoperative during the accelerating period provided that the protection against short-circuit remains operative and that the suppression of the overload protection is only temporary.

For continuous duty motors, protective devices should have time-delay characteristics that ensure reliable thermal protection of the motors for overload conditions.

Copyright © 2002 IEEE. All rights reserved.

Copyright The Institute of Electrical and Electronics Engineers, Inc.
Provided by IHS under license with IEEE
No reproduction or networking permitted without license from IHS
Not for Resale

Table 5—Overcurrent protection for motors and motor branch circuits

Motor full-load current rating	For motor running protection[a]		Recommended setting of branch circuit breaker long-time delay trip element[b]	
	Recommended rating of fuses	Recommended setting of controller inverse-time protection device	Single-phase and three-phase squirrel-cage and synchronous motors (autotransformer, full-voltage reactor, and resistor starting)	DC and wound-rotor ac motors
Amperes	Amperes	Amperes	Amperes	Amperes
1	2	1.15	15	15
2	3	2.3	15	15
3	4	3.45	15	15
4	6	4.6	15	15
5	6	5.75	15	15
6	8	6.9	15	15
7	10	8.05	15	15
8	10	9.2	15	15
9	12	10.35	15	15
10	12	11.5	15	15
11	15	12.65	15	20
12	15	13.8	15	20
13	15	14.95	20	20
14	20	16.1	20	25
15	20	17.25	20	25
16	20	18.4	20	25
17	20	19.55	25	30
18	25	20.7	25	30
19	25	21.8	25	30
20	25	23.0	25	30
22	30	25.3	30	35
24	30	27.6	30	40
26	30	29.9	35	40
28	35	32.2	35	45
30	35	34.5	40	45
32	40	36.8	40	50
34	40	39.1	45	60
36	45	41.4	45	60
38	45	43.7	50	60
40	50	46.0	50	60
42	50	48.3	60	70
44	60	50.6	60	70
46	60	52.9	60	70
48	60	55.2	60	80
50	60	57.5	70	80
52	60	59.8	70	80
54	70	62.1	70	90
56	70	64.4	70	90
58	70	66.7	80	90
60	70	69.0	80	90

Copyright © 2002 IEEE. All rights reserved.
Copyright The Institute of Electrical and Electronics Engineers, Inc.
Provided by IHS under license with IEEE
No reproduction or networking permitted without license from IHS
Not for Resale

Table 5—Overcurrent protection for motors and motor branch circuits *(continued)*

Motor full-load current rating	For motor running protection[a]		Recommended setting of branch circuit breaker long-time delay trip element[b]	
	Recommended rating of fuses	Recommended setting of controller inverse-time protection device	Single-phase and three-phase squirrel-cage and synchronous motors (autotransformer, full-voltage reactor, and resistor starting)	DC and wound-rotor ac motors
Amperes	Amperes	Amperes	Amperes	Amperes
62	80	71.3	80	100
64	80	73.6	80	100
66	80	75.9	90	100
68	80	78.2	90	110
70	90	80.5	90	110
72	90	82.8	90	110
74	90	85.1	100	125
76	90	87.4	100	125
78	90	89.7	100	125
80	100	92.0	100	125
82	100	94.3	110	125
84	100	96.6	110	150
86	100	98.9	110	150
88	110	101.2	110	150
90	110	103.5	125	150
92	110	105.8	125	150
94	110	108.1	125	150
94	125	110.4	125	150
98	125	112.7	125	150
100	125	115.0	125	150
105	125	120.75	150	175
110	150	126.5	150	175
115	150	132.25	150	175
120	150	138.0	150	200
125	150	143.75	175	200
130	150	149.5	175	200
135	175	155.25	175	
140	175	161.0	175	
145	175	166.75	200	
150	175	172.5	200	
155	200	178.25	200	
160	200	184.0	200	
165	200	189.75	225	
170	200	195.5	225	
175		201.25	225	
180		207.0	225	
185		212.75	250	
190		218.5	250	
195		224.25	250	
200		230.0	250	

Copyright © 2002 IEEE. All rights reserved.

Copyright The Institute of Electrical and Electronics Engineers, Inc.
Provided by IHS under license with IEEE
No reproduction or networking permitted without license from IHS
Not for Resale

Table 5—Overcurrent protection for motors and motor branch circuits *(continued)*

Motor full-load current rating	For motor running protection[a]		Recommended setting of branch circuit breaker long-time delay trip element[b]	
	Recommended rating of fuses	Recommended setting of controller inverse-time protection device	Single-phase and three-phase squirrel-cage and synchronous motors (autotransformer, full-voltage reactor, and resistor starting)	DC and wound-rotor ac motors
Amperes	Amperes	Amperes	Amperes	Amperes
210		241.5	300	
220		253.0	300	
230		264.5	300	
240		276.0	300	
250		287.5	350	
260		299.0	350	
270		310.5	350	
280		322.0	350	
290		333.5	400	
300		345.0	400	
320		368.0	400	
340		391.0	450	
360		414.0	450	
380		437.0	500	
400		460.0	500	
420		483.0	600	
440		506.0	600	

[a]Refer to 10.1
[b]Refer to 5.9.5.4, 5.9.5.5, 5.9.5.6, and 5.9.5.8

For intermittent duty motors, the current setting and the time-delay characteristics for protective devices should be chosen after considering the actual service conditions.

When fuses are used to protect polyphase motor circuits, means should be provided for protection against single-phasing.

The setting of instantaneous trips provided for short-circuit protection only and that are responsive to transient inrush should be the standard value nearest to, but not less than, 10 times full-load motor current.

In motor control centers, a motor branch circuit may be considered to be protected against short-circuit and overcurrent by an instantaneous trip circuit breaker set to trip at a value not exceeding 1300% of the motor full-load current, used in conjunction with the motor controller overcurrent relay, in lieu of circuit breakers with long time-delay trip and magnetic instantaneous trip elements.

For a circuit breaker protecting a dc motor branch circuit, the maximum rating (or setting, if adjustable) of the time-delay trip element should be the standard rating or setting equal to or (if not in exact agreement) next above 1.5 times the full-load rating of the motor served.

Copyright © 2002 IEEE. All rights reserved.
Copyright The Institute of Electrical and Electronics Engineers, Inc.
Provided by IHS under license with IEEE
No reproduction or networking permitted without license from IHS
Not for Resale

5.9.5.4 AC motors more than 750 W (1 HP)

Continuous-duty motors rated more 750 W (1 HP) should have running overcurrent protection of approximately 115% of the full-load current rating of the motor. This value may be modified as permitted by 5.9.5.8. Calculated values for overcurrent protection calculated for common motor ratings are shown in Table 5.

5.9.5.5 AC motors 750 W (1 HP) or less, manually started

Motors of 750 W (1 HP) or less that are manually started and that are in a location within sight of the operator may be considered as protected against overcurrent by the overcurrent device protecting the conductors of the branch circuit. This overcurrent device should not be larger than that recommended in Table 5. Any such motor that is in location out of sight of the operator should be protected as recommended in 10.5 for automatically started motors.

5.9.5.6 AC motors 750 W (1 HP) or less, automatically started

Motors 750 W (1 HP) or less are considered protected against overcurrent if provided with running overcurrent protection, as recommended in 5.9.5.5 and 5.9.5.3. They will also be considered protected if they are provided with a thermal protector integral with the motor that will prevent dangerous overheating by opening the motor circuit through contacts integral with the protector, or if part of an approved assembly that does not normally subject the motor to overloads, which is also equipped with other safety controls that protect the motor against damage due to stalled rotor current. Finally, motors may be considered protected against overcurrent if the characteristics of the motor are such that overheating due to failure to start cannot occur and the motor is protected as recommended in 5.9.5.5.

5.9.5.7 Location of overcurrent devices in circuit-ac motors

Motor-running overcurrent devices should be located only in ungrounded conductors. Protective devices (fuse or circuit breaker pole) should be in each ungrounded conductor for single-phase motors and in all three ungrounded conductors for three-phase motors. The protective device should not be in a grounded neutral. All ungrounded conductors should be opened simultaneously to prevent single-phasing.

5.9.5.8 Rating or setting of distribution circuit protection devices

Except as otherwise recommended for lighting branch circuits in 5.8.6, motor branch circuits in 5.9.5.3, and steering gear circuits in 32.5, the rating of fuses or of trip elements in long time-delay circuit breakers should not exceed the rated capacity of the conductors. If the standard ratings and settings of overcurrent devices do not correspond with the rating and setting allowed for conductors, the next higher standard rating and setting may be used, but should not exceed 150% of the allowable current-carrying capacity of the conductor. Where an instantaneous or short time-delay circuit breaker trip is used for short-circuit protection in addition to a long time-delay trip for overload protection, or where it is provided for short-circuit protection only, it should be set below the value of the minimum available short-circuit current determined in accordance with 5.9.2.

An overcurrent-interrupting device must not be connected in parallel with another overcurrent-interrupting device.

5.9.6 Grounding electrical systems and equipment

5.9.6.1 System grounding—general

Methods of grounding low-voltage (600 V or less) power distribution systems should be determined considering the following:

Copyright © 2002 IEEE. All rights reserved.

Copyright The Institute of Electrical and Electronics Engineers, Inc.
Provided by IHS under license with IEEE
No reproduction or networking permitted without license from IHS
Not for Resale

a) Grounded systems reduce the potential for transient overvoltages.
b) To the maximum extent possible, system design should allow for continuity of service under single-line-to-ground fault conditions, particularly in distribution systems supplying critical ship's service loads.
c) Systems should be designed to minimize the magnitude of ground fault currents flowing in the hull structure.

To satisfy these criteria, it is recommended that systems be designed per one of the following grounding philosophies:

— Ungrounded, with all current-carrying conductors completely insulated from ground throughout the system. Ungrounded systems should have provisions for continuous ground fault monitoring.
— High-resistance grounded such that single-line-to-ground faults are limited to 5 A, maximum. High-resistance grounded systems should have provisions for continuous ground fault monitoring. In addition, cables or raceways containing power conductors should be provided with equipment grounding conductors sized in accordance with NEC Table 250-122 to minimize the possibility of ground fault currents flowing in the hull structure.
— Solidly grounded. Solidly grounded designs should be limited to systems supplying noncritical loads, such as normal lighting, galley circuits, and so on. When a solidly grounded distribution system is used, the neutral conductor should be full-sized to preclude overheating due to harmonic distortion from nonlinear loads. (See Clause 33 for restrictions in hazardous locations.) In addition, cables or raceways containing power conductors should be provided with equipment grounding conductors sized in accordance with NEC Table 250-122 to minimize the possibility of ground fault currents flowing in the hull structure.

Medium-voltage systems may be grounded through resistance or reactance. For further guidance on these systems, refer to the regulatory agencies and the classification societies.

The secondary winding of each instrument and control transformer should be grounded at the enclosure.

5.9.6.2 Grounding points

For each separately derived system or part of a system that is desired to be operated as a grounded system, a system ground connection should be provided. Separate grounded and ungrounded systems may be provided in a ship if the two parts are isolated by motor-generator sets or transformers with independent primary and secondary windings. For 115-V single-phase circuits feeding isolated convenience receptacles, the transformer secondary supplying the 115-V circuit may be solidly grounded and GFCI interrupters installed for the convenience receptacles.

The system grounding point should be selected on the following basis:

— Three-phase system: At the neutral
— Single-phase, three-wire system: At the phase midpoint
— Single-phase, two-wire system: At either power conductor

The grounding connection to the system or parts of a system should be made as close to the source of power as possible rather than at the load ends of the system. There should be only one point of connection to ground on any separately derived grounded system. Where there are multiple sources on a separately derived system, an isolated ground bus shall be provided with only one connection to ground.

Copyright © 2002 IEEE. All rights reserved.
Copyright The Institute of Electrical and Electronics Engineers, Inc.
Provided by IHS under license with IEEE
No reproduction or networking permitted without license from IHS
Not for Resale

5.9.6.3 Grounding arrangements

Grounded low-voltage systems (600 V ac or less) should be solidly grounded or high-resistance grounded. However, a low impedance system may be used where the maximum resulting fault current of a line-to-ground fault is sufficiently higher than a maximum three-phase fault to necessitate the use of circuit breakers with increased short-circuit interrupting capabilities, or would exceed the magnitude of current for which the generator windings are braced. If an impedance in the ground connection is required, a value of impedance should be selected that will result in the line-to-ground fault current being equal to or less than the three-phase fault current.

The connection to the hull should be made to a suitable structural frame or longitudinal girder. In the case of large-capacity systems, the connection should be made to both a frame and a girder. Grounding devices should have an insulation class suitable for the line-to-line voltage rating of the system. The thermal capabilities of any external impedance should be coordinated with the characteristics of the overcurrent protective device for the power source to ensure that ground-fault currents will be interrupted before the thermal limit of the grounding device is exceeded.

For grounded systems, a disconnect feature should be provided for each generator ground connection to permit checking the insulation resistance of the generator-to-ground, before the generator is connected to the bus.

5.9.6.4 Hull return

A vessel's hull must not carry current as a conductor, except as part of impressed current cathodic protection systems, or limited and locally grounded systems. Examples of limited or locally grounded systems are a battery system for engine starting that has a one-wire system and the ground lead connected to the engine, insulation level monitoring devices where the circulation current does not exceed 30 mA under the most unfavorable conditions, and welding systems using hull return.

5.9.6.5 Neutral grounding

Each propulsion, power, lighting, or distribution system having a neutral bus or conductor shall have the neutral grounded at a single point. The neutral of a dual-voltage system (i.e., three-phase four-wire ac; three-wire dc; or single-phase, three-wire ac) should be solidly grounded at or directly adjacent to the generator switchboard. Where the grounded system includes a power source, such as a transformer, the single-point ground connection should be made at or directly adjacent to the switchboard or distribution panel for the power source.

5.9.6.6 Generation and distribution system grounding

The neutral of each grounded generation and distribution system should be grounded at the generator switchboard, except the neutral of an emergency power generation system should be grounded with no direct ground connection at the emergency switchboard. The emergency switchboard neutral bus should be permanently connected to the neutral bus on the ship service switchboard, and no switch, circuit breaker, or fuse should be in the neutral conductor of the bus-tie feeder connecting the emergency switchboard to the main switchboard.

The ground connection should be accessible for checking the insulation resistance of the generator to ground before the generator is connected to the bus.

Fuses should not, and circuit breakers need not, be provided for the neutral of a circuit. The grounded conductor of a circuit should not be disconnected by a switch or circuit breaker unless the ungrounded conductors are simultaneously disconnected.

Copyright © 2002 IEEE. All rights reserved.

Copyright The Institute of Electrical and Electronics Engineers, Inc.
Provided by IHS under license with IEEE
No reproduction or networking permitted without license from IHS
Not for Resale

Medium-voltage transformer primary neutrals should not be grounded except when all generators are disconnected and power is being supplied from shore.

5.9.6.7 Tank vessel grounded distribution systems

Distribution systems on tank vessels of less than 1000 V, line-to-line, should not be grounded. If the voltage of the distribution system on a tank vessel is 1000 V or more, line-to-line, and the distribution system is grounded, any resulting current should not flow through hazardous locations.

5.9.6.8 Sizing of neutral grounding conductors

In an ac system, the conductor that connects the system neutral to the single-point ground should be equal in capacity to the largest generator conductor supplying the system or equivalent for paralleled generators.

5.9.7 Ground detection

5.9.7.1 General

Means to continuously monitor and indicate the state of the insulation-to-ground should be provided for electric propulsion systems and integrated electric plants; ship service and emergency power systems; lighting systems; and power or lighting distribution systems that are isolated from the ship service or emergency power and lighting system by transformers, motor-generators, or other devices.

For insulated (ungrounded) distribution systems, a device or devices should be installed that continuously monitor and display the insulation level and give audible and visual alarms in case of abnormal conditions.

When a ship is designed for operation with an unattended machinery space, ground detection alarms should be connected to the machinery control monitoring and alarm system.

Ground indicators should be located at the ship service switchboard for the normal power, normal lighting, and emergency lighting systems; at the emergency switchboard for emergency power and lighting; and at the main power switchboard for integrated propulsion systems. All ground indicators should be readily accessible.

5.9.7.2 Ground detection lamps on ungrounded systems

Ground detection for each ungrounded system should have a monitoring and display system that has a lamp for each phase that is connected between the phase and the ground. This lamp should operate at more than 5 W and less than 24 W when at one-half voltage in the absence of a ground. The monitoring and display system should also have a normally closed, spring return-to-normal switch between the lamps and the ground connection. If lamps and continuous ground monitoring utilizing superimposed dc voltage are installed, the test switch should give priority to continuous ground monitoring and should be utilized only to determine which phase has the ground fault by switching the lamps in. With continuous ground monitoring tied into the alarm and monitoring system, consideration will be given to alternative individual indication of phase to ground fault. If lamps with a low impedance are utilized, the continuous ground monitoring is reading ground fault equivalent to the impedance of the lamps, which are directly connected to the ground.

Where continuous ground monitoring systems are utilized on systems where nonlinear loads (e.g., adjustable speed drives) are present, the ground monitoring system must be able to function properly.

5.9.7.3 Ground detection on grounded neutral ac systems

Ground detection for each ac system that has a grounded neutral should have an ammeter and ammeter switch that can withstand the maximum available fault current without damage. The ammeter should

--`,,`-`-`,,`,,`,`,,`---
Copyright © 2002 IEEE. All rights reserved.
Copyright The Institute of Electrical and Electronics Engineers, Inc.
Provided by IHS under license with IEEE
No reproduction or networking permitted without license from IHS
Not for Resale

indicate the current in the ground connection and should have a scale that accurately, and with clear definition, indicates current in the 0-A to 10-A range. The ammeter switch should be the spring return-to-on type.

The ammeter and current transformer should both be of such a design that they are not damaged by ground fault currents. Where the ammeter is located in a remote enclosure from the current transformer, a suitable protective device should be provided to prevent high voltage in the event of an open circuit. A short-circuiting switch should be connected in parallel with the protective device for manually short-circuiting the remote part of the current transformer.

For high resistance grounded systems, an indicating ammeter or voltmeter should be provided to indicate ground current flow.

5.9.7.4 Equipment grounding

Exposed non-current-carrying metal parts of fixed equipment that may become energized because of any condition for which the arrangement and method of installation does not ensure positive grounding should be permanently grounded through separate conductors or grounding straps, securely attached, and protected against damage.

The metal case of each instrument, relay, meter, and instrument transformer should be grounded.

Instrument and control transformer enclosures should be grounded to the ship structure.

Each receptacle outlet that operates at 55 V or more should have a grounding pole. However, this requirement does not apply to lamp bases, shades, reflectors, or guards supported on lampholders or lighting fittings constructed of or shrouded in nonconducting material. Grounding poles are also not required on portable appliances that have double insulation, or portable appliances that are protected by isolating transformers. Grounding poles are not required on bearing housings that are insulated in order to prevent the circulation of current in the bearings. Grounding poles are not required on apparatus supplied at not more than 55 V.

5.9.7.5 Equipment grounding methods

All non-current-carrying metallic parts of electrical equipment should be effectively grounded by the following methods. Metal frames or enclosures of apparatus should be fixed to, and be in metallic contact with, the ship's structure, provided that the surfaces in contact are clean and free from rust, scale, or paint when installed and are firmly bolted together. Alternatively, they should be connected to the hull either directly by ground strap or, for portable equipment, via the grounding terminal of a receptacle outlet. A reading of 0.1 ohm (dc resistance) or less should be achieved between an equipment enclosure and an adjacent structural ground potential point.

Metallic cable sheaths or armor should not be solely relied on for achieving equipment grounding. The metallic sheaths and armor should be grounded by means of connectors, or cable glands approved, listed or labeled for the purpose and designed to ensure an effective ground connection. The stuffing tube should be firmly attached to, and be in effective electrical contact with, a grounded metal structure. Conduits should be grounded by being screwed into a grounded metallic enclosure, or by nuts on both sides of the wall of a grounded metallic enclosure where contact surfaces are clean and free from rust, scale, or paint.

As an alternative to the methods described in the above paragraph, armor and conduit may be grounded by means of clamps or clips of corrosion-resistant metal, making effective contact with the sheath or armor and grounded metal. All joints in metallic conduits and ducts and in metallic sheaths of cables that are used for ground continuity should be solidly made and protected against corrosion.

Copyright © 2002 IEEE. All rights reserved.

Copyright The Institute of Electrical and Electronics Engineers, Inc.
Provided by IHS under license with IEEE
No reproduction or networking permitted without license from IHS
Not for Resale

Every grounding conductor should be of copper or other corrosion-resistant material and should be securely installed and, where necessary, protected against damage and electrolytic corrosion.

On wood and composite ships, a continuous-ground conductor should be installed to facilitate the grounding of non-current-carrying exposed metal parts. The ground conductor should terminate at a copper plate of area not less than 0.2 m^2 fixed to the keel below the light waterline in a location that is fully immersed under all conditions of heel.

Every ground connection to the ship structure, or on wood and composite ships to the continuous ground conductor, should be made in an accessible position and should be secured by a screw or connector of brass or other corrosion-resistant material used solely for that purpose.

All armor or other metal coverings of cable should be electrically continuous throughout the entire length and should be effectively grounded to the hull of the ship at both ends, except for branch circuits (final sub-circuits), which may be grounded at the supply end only. The metallic braid or sheath should be terminated at the stuffing tube or connector where the cable enters the enclosure and should be in good electrical contact with the enclosure.

Methods of securing aluminum superstructures to the steel hull of a ship often include insulation to prevent galvanic corrosion between these materials. In such cases, a separate bonding connection should be provided between the superstructure and the hull. The connection should be made in a manner that minimizes galvanic corrosion and permits periodic inspection.

5.9.7.6 Grounding of portable equipment

Portable electrical equipment energized from the ship's electrical system should have all exposed metal parts grounded. This should be accomplished by an additional conductor (green) in the portable cable and a grounding device in the attachment plug and receptacle. Further safety can be provided by the use of an isolating transformer. Double-insulated portable electrical equipment need not have exposed metal parts grounded.

5.10 Lightning protection

Lightning protection should be provided for each mast on wooden and composite vessels and for each wooden or composite mast on steel vessels. Where the height of an antenna exceeds that of the mast and the antenna is equipped with lightning protective devices, separate mast lightning protection need not be provided.

Lightning protection should consist of continuous tape or wire having a section of not less than 100 mm^2 (4/0 AWG 212 000 cmil) attached by copper rivets or clamps to a copper spike not less than 13 mm in diameter, projecting at least 150 mm above the top of the mast. The copper tape or wire should be run to a copper plate having an area not less than 0.2 m^2, fixed to the keel below the light water line in a location that is fully immersed under all conditions of heel. No grounding conductor should be attached to the lightning conductor plate. The copper plate should be separate from and in addition to the copper plate for terminating the grounding conductor.

Copyright © 2002 IEEE. All rights reserved.
Copyright The Institute of Electrical and Electronics Engineers, Inc.
Provided by IHS under license with IEEE
No reproduction or networking permitted without license from IHS
Not for Resale

6. Emergency power systems

6.1 General

Emergency power is required by regulatory authorities and classification societies depending on vessel type, tonnage, and voyage. The recommendations in this document are general. For specific requirements, consult the appropriate regulatory authorities and classification societies.

Every vessel should be provided with a self-contained emergency source of electric power, generally a diesel-engine generator, gas turbine-driven generator, or storage batteries. These emergency sources of power and an emergency switchboard should be located in a space separate and remote from the main switchboard, that is above the uppermost continuous deck, aft of the collision bulkhead, outside the main machinery compartment, and readily accessible from the open deck. The emergency switchboard should be located in the same space as the emergency power source, in an adjacent space, or as close as practical.

When a compartment containing the emergency source of electric power, or vital components thereof, adjoins a space containing either the ship's service generators or machinery necessary for the operation of the ship's service generators, all common bulkheads and decks should be protected by structural insulation. This protection should prevent an excessive temperature rise in the space containing the emergency source of electric power, or vital components thereof, for a period of at least 1 hour[21] in the event of fire in the adjoining space.

If equipment requires an emergency power supply with characteristics other than those directly available from the emergency sources, the motor-generators, converters, rectifiers, or other apparatus supplying this equipment should automatically start and assume the load upon establishment of emergency supply.

Indication should be provided in the machinery space, preferably at the principal propulsion control station, to indicate when the emergency generator is operating and when the emergency storage battery is being discharged.

6.2 Emergency generators

Emergency generator(s) should be sized to supply 100% of connected loads that are essential for safety in an emergency condition. Where redundant equipment is installed so that not all loads operate simultaneously, these redundant loads need not be considered in the calculation.

The prime movers of generators should be provided with all accessories necessary for operation and protection of the prime mover, including a self-contained cooling system that ensures continuous operation in an ambient temperature of 45 °C.

Any liquid fuels used should have a flash point of 43 °C minimum.[22]

Emergency generators should be capable of carrying a full rated load within 45 seconds after loss of the normal power source with the intake air, room ambient temperature, and starting equipment at a minimum temperature specified for the application.

Except for a thermostatically controlled, electric water-jacket heater connected to the emergency bus, emergency generator prime movers should not require a starting aid to meet this requirement.

[21]The SOLAS requirement for cargo ships is a minimum of 18 hours.
[22](110 °F)

Copyright © 2002 IEEE. All rights reserved.

Copyright The Institute of Electrical and Electronics Engineers, Inc.
Provided by IHS under license with IEEE
No reproduction or networking permitted without license from IHS
Not for Resale

Prime movers of emergency generator sets should start by hydraulic, compressed air, or electrical means.

Hydraulic starting systems should be automatically maintained within the predetermined pressure limits and be electrically energized from the emergency bus. Provision for manual recharge should be provided.

The starting air receiver for compressed air starting systems should be supplied from one of the following sources of air:

— The main or auxiliary compressed air receivers with a check valve in the emergency generator room to prevent back flow of compressed air to the ship service system, and there should be a hand-cranked, diesel-powered air compressor for recharging the air receiver.
— An electrically driven air compressor that is automatically operated and is powered from the emergency power source. If this compressor supplies other auxiliaries, there should be a check valve at the inlet of the starting air receiver to prevent back flow of compressed air to the other auxiliaries, and there should be a hand-cranked, diesel-powered air compressor for recharging the air receiver.

When emergency generator is operated in emergency mode, the system performance should be such that the steady state voltage for any increasing or decreasing load between zero and full load at rated power factor should not vary at any point more than ± 3.5% of rated generator voltage between reactive load change from 0% to 60% of the continuous kilovoltampere rating. For emergency sets under transient conditions, the values may be increased to ± 4% in not more than 5 s.

Emergency generators should maintain proper lubrication and not spill oil when subjected to the pitch and roll requirements of 1.5.1 item c) to either side of the vertical.

Emergency generator sets should shut down automatically upon loss of lubricating oil pressure, overspeed, or operation of a fixed fire extinguishing system in the emergency generator room.

Diesel engine prime movers should be provided with an audible alarm that sounds on low oil pressure and high cooling water temperature.

An independent fuel supply should be provided for prime movers. A fuel tank should be sized for the number of hours of full load operation as determined for the specific application.

Each emergency generator should be equipped with starting devices with an energy storage capability of at least six consecutive starts. A single source of stored energy, with the capacity for six starts, should be protected to preclude depletion by the automatic starting system, or a second source of energy should be provided for an additional three starts within 30 min. If, after three attempts, the generator set has failed to start, an audible and visual “start failure” alarm should be activated in the main machinery space control station and on the navigation bridge. The starting sequence should be automatically locked-out until an operator can initiate the final three starting attempts from the emergency generator space.

6.3 Emergency storage battery

Where the emergency source of power is a storage battery, it should be capable of carrying the emergency load without recharging while maintaining the voltage of the battery throughout the discharge period within +5% and −12 % of its nominal voltage. If the storage battery is not normally connected to the emergency switchboard, it should be automatically connected in the event of failure of the main power supply.

When emergency storage batteries are supplied, appropriate means should be furnished for providing power from the batteries to ac loads.

Copyright © 2002 IEEE. All rights reserved.
Copyright The Institute of Electrical and Electronics Engineers, Inc.
Provided by IHS under license with IEEE
No reproduction or networking permitted without license from IHS
Not for Resale

When storage batteries are used as the source of emergency lighting and power, transfer to the batteries should be automatic upon failure of the ship service source. Upon restoration of ship service power and an appropriate time delay, the emergency system should be automatically reconnected to the ship service source.

See Clause 22 for general requirements applicable to storage battery installations.

6.4 Emergency power distribution system

The emergency, interior communication and electronics switchboards must meet all requirements as detailed in Clause 8.

The emergency distribution arrangement should be as described in Clause 5, including the typical one-lines illustrating the electrical distribution system. These are for guidance only and are not intended to be design restrictive.

The emergency switchboard should be supplied during normal operation from the main switchboard by an interconnecting feeder. This interconnecting feeder should be protected against short-circuit and overload at the main switchboard and, where arranged for feedback, protected for short-circuit at the emergency switchboard. The interconnecting feeder should be disconnected automatically at the emergency switchboard upon failure of the main source of electrical power. Means shall be provided to prevent auto closing of the emergency generator circuit breaker should a fault occur on the emergency switchboard.

The power from the facility generating plant for the emergency loads should be supplied to the emergency loads by an automatic transfer device (i.e., circuit breaker, contactor, automatic transfer switch, and so on) and located remotely from the main switchboard. The automatic transfer device should use electrically operated circuit breakers when installed in switchboards. When independently enclosed, the automatic transfer device should be of the equipment type with coils energized only during the transfer operation. Automatic transfer switches should conform to the requirements of UL 1008-1996 or IEC 60947-6-1.

Upon interruption of normal power, the prime mover driving the emergency power source should start automatically. When the voltage of the emergency source reaches 85% to 95% of nominal value, the emergency loads should transfer automatically to the emergency power source. The transfer to emergency power should be accomplished within 45 seconds after failure of the normal power source. If the system is arranged for automatic retransfer, the return to normal supply should be accomplished when the available voltage is 85% to 95% of the nominal value and the expiration of an appropriate time delay. The emergency generator should continue to run without load until shut down either manually or automatically by use of a timing device.

If fast transfer schemes (less than 15 cycles) are used, the ABT devices feeding motor loads should be equipped with an adjustable time delay to permit low-voltage protection (LVP) motor controllers to open.

Where calculations or other documentation are available to show that the low-voltage motors can safely ride through the fast automatic transfer operation, the adjustable time delay on the ABT may be eliminated or set to minimum (0 seconds).

For ready availability of the emergency source of electrical power to emergency loads, arrangements should be made, where necessary, to automatically disconnect nonemergency loads from the emergency switchboard upon loss of facility normal power.

If any nonemergency loads are connected to the emergency switchboard and if the system is arranged for feedback operation (through the interconnection feeder), they should automatically be disconnected at the emergency switchboard upon detection of 95% of full load current of the emergency generator to prevent an overload condition.

Copyright © 2002 IEEE. All rights reserved.

Copyright The Institute of Electrical and Electronics Engineers, Inc.
Provided by IHS under license with IEEE
No reproduction or networking permitted without license from IHS
Not for Resale

The emergency switchboard should be arranged to prevent parallel operation of an emergency power source with any other source of electrical power (i.e., main power), except where suitable means are taken for safeguarding independent emergency operation under all circumstances. This will allow for the emergency generator to be used to supply nonemergency loads. This is useful when exercising and testing the emergency generator(s).

Where parallel operation is possible, the emergency generator shall be equipped with the appropriate synchronizing devices in accordance with Clause 7.

Protective devices and circuitry shall be provided to automatically disconnect the interconnection feeder and any nonemergency loads should a main power failure occur while the emergency generator is running (i.e., exercising or testing)

General alarm emergency circuits should be fed from the emergency switchboard using only fuses or magnetic trip circuit breakers.

6.5 Emergency switchboard configuration

If two ship service generating plants are provided, with paralleled or automatic feed to a distribution switchboard, normal supply to the emergency switchboard should be from the distribution switchboard.

If a common distribution switchboard is not provided, there should be an emergency bus feeder from each service switchboard connected to an ABT device on the emergency switchboard.

Upon failure of ship service supply, the temporary bus should automatically be transferred to battery supply and should return to the normal supply when the final bus is energized by the emergency generator or by restoration of ship service power.

Upon restoration of ship service power, the final bus may be returned automatically to the normal supply. The emergency generator should continue to run without load until shut down manually.

The emergency switchboard should be in the same compartment as the emergency generator set and in a compartment adjacent to the storage battery room.

Indication should be provided in the machinery space, preferably at the principal propulsion control station, to indicate when the emergency generator is operating and when the emergency storage battery is being discharged.

6.6 Temporary emergency power

A temporary power source provides emergency power in the interim period between the loss of main power and the establishment of emergency generator power.

Where a temporary source of emergency power is required, it should consist of a storage battery suitably located for use in an emergency. Storage battery shall be in accordance with Clause 22. A converter may be used for supplying the temporary emergency bus for ac loads. The battery should have sufficient capacity and should be arranged to automatically supply the services listed in the following paragraphs of this subclause for 30 min (if they depend on an electrical source for their operation) in the event of failure of either the main or emergency source of power.

Where temporary emergency power is required, it shall be in accordance with this subclause. It shall feed the following designated loads:

Copyright © 2002 IEEE. All rights reserved.
Copyright The Institute of Electrical and Electronics Engineers, Inc.
Provided by IHS under license with IEEE
No reproduction or networking permitted without license from IHS
Not for Resale

a) The lighting required in 6.7.
b) All essential internal communication equipment, fire detection, and associated alarm equipment.
c) All internal communication equipment required in an emergency.
d) Intermittent operation of the daylight signaling lamp, the ship's whistle, the general alarm, the manual fire alarms, and all internal signals that are required in an emergency, unless they have an independent supply from an accumulator battery suitably located for use in an emergency and sufficient for the period specified.
e) When storage batteries are used as the source of emergency lighting and power, transfer to the batteries should be automatic upon the failure of the ship service source. Upon restoration of ship service power, the emergency system should be automatically reconnected to the ship service source.

The temporary emergency bus should be supplied from the final emergency bus through an ABT device.

6.7 Temporary emergency circuits

The emergency generator supplied power source should be supplemented by a temporary emergency source in accordance with 6.6. The capacity of the temporary emergency source should be determined by the connected load of all emergency circuits listed as follows:

a) Navigation lights
b) Machinery space emergency lighting sufficient to permit performance of essential operations and the observation of all necessary gauges, gauge glasses, and instruments required under emergency conditions to facilitate restoration of service and to permit escape from all normally occupied spaces
c) Radio room lighting
d) Lighting (including low-level emergency egress lighting) for passenger and crew exits and passageways, including public spaces

NOTE—Lighting should be adequate to permit passengers and crew to find their way to the embarkation deck. At least one light should be located in each section of each passageway and in each stairwell and stairwell exit on each deck. In no case should the distance between lights exceed 23 m.

e) At least one light in each berthing compartment accommodating 20 or more persons
f) One or more lights in the galley, pantry, steering gear room, space containing emergency power sources, chartroom, navigating bridge, all public spaces, and crew's mess rooms and recreation rooms
g) Boat and embarkation deck lighting
h) Essential communication circuits among the navigating bridge, machinery spaces, and the steering gear room
i) Watertight door operating gear (if electric) and indicating system
j) Emergency loudspeaker or public address system
k) General or emergency alarm and the fire alarm systems
l) Gyro compass
m) Holding magnets for self-closing fire doors (To reduce battery capacity, holding magnets may be provided with a timing relay to cut off power if final emergency supply is not established or ship service supply restored within the maximum time provided for automatic cranking of the emergency generator prime mover, but not less than 2 min.)

6.8 Final emergency circuits

The following circuits should be connected to the final emergency bus:

a) Daylight signaling lamp
b) Whistle and siren control

Copyright © 2002 IEEE. All rights reserved.

Copyright The Institute of Electrical and Electronics Engineers, Inc.
Provided by IHS under license with IEEE
No reproduction or networking permitted without license from IHS
Not for Resale

c) Lifeboat flood lights (lighting in the vicinity of the lifeboats and the boat handling equipment, including lighting of the water at the sides of the vessel, should be sufficient to permit the complete operation of loading, lowering, and releasing of the lifeboats)
d) Emergency bilge pump, one fire pump, and if provided, one sprinkler pump
e) Other interior communication systems essential for the emergency operation of the vessel
f) Main and emergency radio (this is in addition to the separate storage battery source required by the regulatory agencies for emergency radio installations)
g) Navigation equipment required by the regulatory agencies
h) One steering gear system

6.9 Time factor for supply of emergency power:

The time factor for supplying emergency power, unless otherwise recommended, is as indicated in Table 6.

Table 6—Minimum time requirement for emergency power

Minimum time factor (hours)		
	Passenger vessels	**Cargo vessels**
Ocean and coastwise		
100 to 1600 gross tons	12	12
1600 gross tons and over	36	18
Great Lakes		
Vessels navigating more than 4.8 km [a]	8	8
Vessels navigating not more than 4.8 km offshore [a]	3	3
Ferries on runs over 1 h	2	
Ferries on runs 1 h and under	1	
Great Lakes and Rivers		
Ferries on runs over 1 h	2	
Ferries on runs 1 h and under	1	
Other vessels	3	3

[a](3 statute miles)

6.10 Cargo vessels

The emergency source should consist of storage batteries or a generating set capable of continuous operation for the time indicated in Table 6. This source should supply the navigating light circuits, telegraphs, navigation and communication systems, binnacles, daylight signaling lamp, searchlights and the emergency lighting of machinery spaces, steering-gear room, radio room, emergency power stations, passageways, exits from crew's quarters, and other spaces and equipment necessary for use in an emergency in accordance with SOLAS 1997, as amended.

Copyright © 2002 IEEE. All rights reserved.
Copyright The Institute of Electrical and Electronics Engineers, Inc.
Provided by IHS under license with IEEE
No reproduction or networking permitted without license from IHS
Not for Resale

The emergency distribution shall be in accordance with 6.5. Generally, a single multibus switchboard will serve the emergency power, lighting, interior communication, and electronics circuits.

When the emergency source of power is a generator, it shall meet the requirements of 6.2.

When the emergency source of power is a storage battery, it shall meet the requirements of 6.3.

Cargo vessels less than 1600 tons and not required by regulatory authorities to have an independent emergency source of power should have, as a minimum, permanently fixed, individual, automatically charged, relay-operated battery lights having a minimum period of operation of 12 hours. Lights should be located along exit routes, in machinery spaces, and at launching stations for survival craft.

6.11 Passenger vessels (ocean and coastwise)

The emergency power source on passenger vessels required by regulatory authorities to have an emergency generator (final emergency source) should consist of at least one diesel-engine or gas-turbine driven generator in accordance with 6.2. It should have sufficient capacity and fuel supply to carry the full emergency load continuously for the duration listed in Table 6. The emergency generator(s) shall feed the temporary and final emergency loads listed in the following paragraph.

For passenger vessels, the emergency switchboard and distribution system shall be in accordance with 6.5. Generally, a single multibus (three segments) switchboard will serve the final emergency bus, temporary emergency bus, and essential dc loads. In the case of larger systems, three separate switchboards may be required.

6.12 Passenger vessels (coastal and inland waters)

The emergency power and lighting system for passenger vessels operating in coastal and inland waterways should be as described in 6.9. The following exceptions may be used where permitted by regulatory agencies:

- The source may be either a storage battery or an automatically started generator set feeding a single emergency bus.
- The circuits of 6.8 may be supplied from the emergency bus, and the gyro compass, daylight signaling lamp, lifeboat flood lights, and interior communication systems may be omitted
- The time rating of the emergency source should be as shown in Table 6.

6.13 Passenger vessels (other)

For passenger vessels not included in 6.11 and 6.12, the emergency source for lighting and power should consist of a storage battery in accordance with 6.4 and for the duration stated in Table 6.

6.14 Passenger vessels with RO-RO (roll on-roll off) cargo spaces

Passenger ships with RO-RO cargo spaces should be provided with supplementary electric lighting in all public spaces and passageways. The lighting should be capable of operating for at least 3 h when all other sources of electrical power have failed and under any condition of heel.

The illumination provided should be such that the approach to the means of escape can be readily seen.

Copyright © 2002 IEEE. All rights reserved.

Copyright The Institute of Electrical and Electronics Engineers, Inc.
Provided by IHS under license with IEEE
No reproduction or networking permitted without license from IHS
Not for Resale

The source of power for the supplementary lighting should consist of storage batteries located within the lighting units that are continuously charged, where practicable, from the emergency switchboard. The supplementary lighting should be such that any failure of the lamp will be immediately apparent.

Any storage battery provided should be periodically replaced. The replacement intervals should consider the specified battery service-life for ambient conditions seen in service.

Portable, rechargeable, battery-operated lamps should be provided in every crew space passageway, recreational space, and working space that is normally occupied, unless supplementary emergency lighting, described in this subclause, is provided.

6.15 Passenger vessels without an independent emergency source of power

Passenger vessels not required to have an independent emergency source of power should have, as a minimum, permanently fixed individual, automatically charged, relay operated battery lights having a minimum period of operation of 12 hours. Lights should be located in exit routes, in machinery spaces, and at launching stations of survival craft.

7. Electric power generation

7.1 General

Electric power generating systems discussed in Clause 7 consist of one or more generator sets. These recommendations include both sound engineering practices and special considerations for safe and reliable operation in marine applications

Diesel-fueled prime movers are most practical for the majority of applications, but gas reciprocating engines or gas- or liquid-fueled gas turbines may be utilized. Gasoline engines normally are unacceptable.

7.2 Installation and location

Generating sets should be located in a dry, well-ventilated place and should be suitable for the area classification. They should not be installed in immediate proximity to water and steam piping and should be protected from dripping liquids. Horizontal rotating machines should be installed with the shaft in a fore and aft direction. In cases where the shaft will be located athwartship, special consideration should be given to bearings and lubrication.

Refer to 1.5.1 for inclination requirements.

The location and installation of generating sets should allow access for inspection, maintenance, and repair. There should be at least 460 mm between the set and surrounding objects to provide accessibility. Sufficient room should be provided to facilitate service and removal of the rotor or armature.

When generating sets are located in deckhouses, the enclosing structure should be steel or other fireproof material.

The generator and its driving unit should be mounted on a common rigid sub-base or other means engineered to ensure proper alignment.

Where instrumentation and electrical controls are mounted locally on the generator sub-base, they shall be isolated to prevent damage from vibration.

Copyright © 2002 IEEE. All rights reserved.
Copyright The Institute of Electrical and Electronics Engineers, Inc.
Provided by IHS under license with IEEE
No reproduction or networking permitted without license from IHS
Not for Resale

Providing an enclosure or locating the unit in a space separate from other equipment or personnel can reduce the effects of prime mover noise.

The installation of fire detection systems are required for enclosed generating plants.

7.2.1 Air intakes

Engine air intakes should be located in unclassified locations whenever possible to minimize the risk of ingestion of flammable mixtures. All diesel-fueled prime movers shall be equipped with an air-intake shutoff valve or other suitable device that operates under emergency conditions that require prime-mover or generator shutdown. The following diesel-fueled engines are excepted:

a) Cold-start engines (a diesel engine that starts a larger engine)
b) Fire pumps
c) Emergency generators
d) Blow out preventer (BOP) accumulator systems
e) Air supply to divers or confined entry personnel
f) Portable single-cylinder rig washers
g) Engines on escape capsules

Engine exhaust outlets should be located in unclassified locations whenever possible to minimize the risk of ignition of flammable mixtures.

Corrosion-resistant parts—interior bolts, nuts, pins, screws, terminals, brushholder studs, springs, and other small parts that could be damaged by corrosion—should be made of corrosion-resistant materials or suitably protected against corrosion. Steel springs should be treated to resist moisture in such a manner as not to impair their spring quality. See 1.8.1.

7.3 Prime movers

7.3.1 Sizing

It is recommended that prime movers for generator applications have a minimum continuous shaft horsepower (HP) output according to Equation (1):

$$HP_{MIN} = \frac{100 \times \text{Design kw Load}}{0.746 \times \text{Generator Efficiency}} \quad (1)$$

The efficiency of 25 kW and larger generators typically ranges from 88% to 94%. Allowing 1.5 HP per kilowatt output yields a conservative prime-mover power requirement.

All prime-mover ratings should be adjusted for the highest expected ambient temperatures and be derated for total system inlet and exhaust pressure losses. Generally, gas turbines are much more sensitive to these conditions.

Special consideration should be made when sizing prime movers for service where large motors will be started across the line.

Each generator should be driven by a prime mover that, if used to drive auxiliary loads, should have sufficient capacity for the total load, unless it is not possible to use the generator and the other auxiliary load simultaneously.

Copyright © 2002 IEEE. All rights reserved.

Copyright The Institute of Electrical and Electronics Engineers, Inc.
Provided by IHS under license with IEEE
No reproduction or networking permitted without license from IHS
Not for Resale

Reciprocating engines normally are coupled directly to generators and operate at 720, 900, 1200, or 1800 rpm for 60-Hz generators and at 600, 750, 1000, and 1500 rpm for 50-Hz generators. For reduced maintenance and increased life, it is recommended that reciprocating type engines for continuous power installations be operated at 1200 rpm or less. Reciprocating type engines for standby (noncontinuous) applications often are operated at speeds up to 1800 rpm. Gas turbines may operate at higher speeds and drive generators through gearbox assemblies.

7.3.2 Reciprocating engine-generator controls

Controls that shutdown the engine should also open the generator main circuit breaker.

Automatic controls should be provided to shut down the reciprocating engine that is driving a generator when any of the following conditions occur (see Clause 6):

— Low lube oil pressure.
— High jacket water temperature.
— Overspeed shutdowns should operate independently of governor controllers and should be set at no more than 115% of rated speed. The overspeed trip should also be equipped with a means for manual tripping.
— Overvoltage for generators 500 kW and larger. It is recommended that either overvoltage shutdown controls be provided or that breakers be tripped and voltage regulators be deenergized.

Optional shutdown controls include

a) Low lube oil level
b) Low jacket water level
c) Underspeed
d) Vibration

NOTE—Vibration shutdown controls normally are not used for generators under 250 kW.

e) High lube oil temperature
f) Undervoltage, for generators 500 kW and larger

NOTE—Undervoltage shutdown controls normally are not used for generators under 500 kW.

g) Underfrequency, for generators 500 kW and larger

NOTE—Underfrequency shutdown controls normally are not used for generators under 500 kW.

h) Loss of excitation, for generators 950 kW or larger or units that are to be paralleled

NOTE—Loss of excitation shutdown controls normally are not used for generators under 950 kW or units that are not to be paralleled.

i) Generator differential, for generators 950 kW or larger

NOTE—Generator differential shutdown controls normally are not used for generators under 950 kW.

j) Overfrequency, for generators 500 kW or larger

NOTE—Overfrequency shutdown controls normally are used for generators over 500 kW.

Copyright © 2002 IEEE. All rights reserved.
Copyright The Institute of Electrical and Electronics Engineers, Inc.
Provided by IHS under license with IEEE
No reproduction or networking permitted without license from IHS
Not for Resale

7.3.3 Gas turbine controls

Controls that shutdown the gas turbine should also open the generator main circuit breaker.

Automatic controls should be provided to shut down gas turbines that are driving generators when any of the following conditions occur:

a) Fail-to-start
b) High running exhaust temperature
c) High lube oil temperature
d) Low lube oil pressure
e) Underspeed
f) Overspeed
g) Vibration

NOTE—Overvoltage for generators 500 kW and larger; it is recommended that either overvoltage shutdown controls be provided or that breakers be tripped and voltage regulators be deenergized.

Optional shut-down controls include

— Overfrequency

NOTE—Overfrequency shutdown controls should be considered for generators larger than 500 kW.

— Loss of excitation

NOTE—Loss of excitation shutdown controls should be considered for paralleled generators larger than 950 kW.

— Generator differential

NOTE—Generator differential shutdown controls should be considered for generators larger than 950 kW.

— Lubrication
— All ship service and emergency generating sets should lubricate and operate satisfactorily without spilling oil, in a 10-s period, under the conditions of inclination, roll, and pitch specified in 1.5.1; if the shaft is to be located athwartships, the manufacturer should be advised so that any special requirements for this orientation are addressed

All prime movers for main power and ship service generating sets (not emergency sets) that depend on forced lubrication should be arranged to shut down automatically on loss of oil pressure. The shutting down of the prime mover should cause the tripping of the generator circuit breaker. An alarm system should be provided and arranged to function on low lubricating oil pressure.

7.3.4 Governors

The prime-mover governor performance is critical to satisfactory electric power generation in terms of constant frequency, response to load changes, and the ability to operate in parallel with other generators.

The steady state speed variation should not exceed 5% (e.g., 3 Hz for a 60-Hz machine) of rated speed at any load condition.

Each prime mover should be under control of a governor capable of limiting the speed, when full load is suddenly removed, to a maximum of 110% of the rated speed. It is recommended that the speed variation be limited to 5% or less of the overspeed trip setting.

Copyright © 2002 IEEE. All rights reserved.

Copyright The Institute of Electrical and Electronics Engineers, Inc.
Provided by IHS under license with IEEE
No reproduction or networking permitted without license from IHS
Not for Resale

The prime mover and regulating governor should also limit the momentary speed variation to the values indicated in this subclause. The speed should return to within 1% of the final steady state speed in a maximum of 5 seconds or as set by the limits specified in Table 7.

For emergency generators, the prime mover and regulating governor shall be capable of assuming the sum total of all emergency loads upon closure to the emergency bus. The response time and speed deviation shall be within the tolerances indicated in Table 7.

Table 7—Response time and speed deviation requirements

Load (%)	Response time (s)	Speed deviation (%)
0 to 50, 50 to 0	5.0	10
50 to 100, 100 to 50	5.0	10

Generator sets should be capable of operating successfully in parallel when defined as follows: If at any load between 50% and 100% of the sum of the rated loads on all generators, the load (kW) on the largest generator does not differ from the others by more than ± 15% of the rated output or +25% of the rated output of any individual generator, whichever is less, from its proportionate share. The starting point for the determination of the successful load distribution requirements is to be at 75% load with each generator carrying its proportionate load.

7.3.5 Mechanical governors

The mechanical-type governor has the slowest response to load changes and provides the least accuracy in speed control and, therefore, should be considered only for small generator units in which close frequency control is not required. It is not suitable for continuous parallel operation.

7.3.6 Hydraulic-mechanical governors

The hydraulic-mechanical type governor provides fast response to load changes and close speed control. This governor can be equipped with an electric motor to allow for remote speed control. The governor is adjustable to operate in either isochronous (constant speed) or droop (speed decreases with load) mode, thus, allowing its use for continuous parallel generator operation.

7.3.7 Electronic governors

The electronic governor system provides the highest accuracy and fastest response. It senses engine speed from either the frequency of the generated voltage or a magnetic pick-up installed on the engine.

Automatic load sharing control and automatic synchronization can be incorporated with this type governor and is desirable for multi-unit continuous parallel operation. Generators operating in parallel should share the load in proportion to their rating. Units of different sizes in continuous parallel operation require detailed engineering analysis.

7.3.8 Engine starters

Electric, pneumatic, and hydraulic motor starters are available for both reciprocating engines and small-to-medium-sized turbines. All three types of starters may be safely used in classified locations, provided that electric starter systems are approved for the area. Electric and compressed air motor starting systems are the

Copyright © 2002 IEEE. All rights reserved.
Copyright The Institute of Electrical and Electronics Engineers, Inc.
Provided by IHS under license with IEEE
No reproduction or networking permitted without license from IHS
Not for Resale

most common used in reciprocating engines. It is recommended that engine starting batteries not be used for control system power because of a significant voltage drop during cranking.

7.3.9 Shutdown valve

A fail-closed fuel shutdown valve should be provided on natural gas-fueled prime movers. On MODUs, an air-intake shutoff valve should be installed on diesel-fueled prime movers. These valves would be operated under emergency conditions that require prime mover/generator shutdown. Other requirements for natural gas-fueled systems shall be in accordance with IACS UR M59.

7.3.10 Ignition systems

For prime movers installed in classified locations, ignition systems should be designed and installed to minimize the possibility of the systems being a source of ignition.

All engines with electrical ignition systems should be equipped with a system designed to minimize the potential for the release of sufficient electrical energy to cause ignition of an external, ignitable mixture. Systems verified by a Nationally Recognized Testing Laboratory (NRTL) as suitable for classified locations are recommended. Breaker point distributor-type ignition systems should not be used in classified locations. All wiring should be minimized in length; kept in good condition, clean, clear of hot or rubbing objects; suitable for the voltage; and suitable for the ambient temperature.

7.3.11 Special considerations

The minimum power requirement is of special importance when diesel-engine prime movers are used to avoid excessive maintenance due to continuous operation of engines at light loads for long time periods.

7.4 Generators

7.4.1 General

See Clause 31 for additional requirements for electric propulsion systems.

Electric generators should be designed to perform in accordance with NEMA MG-1, ANSI C50, or IEC 60034. Generators are normally three phase, except for small systems that serve only single-phase loads.

Power takeoff generators may be connected via a clutch that will enable the generator to be disconnected from the propeller shaft.

7.4.2 Selection and sizing

Generators are designed to carry full nameplate rating in kilowatts (kW) provided the nameplate kilovolt ampere (kVA) rating is not exceeded. Air-cooled generators normally are rated for 0.8 power factor (power factor = kW/kVA) at sea level and 50 °C ambient temperature when located in machinery spaces or other spaces that could achieve this ambient temperature. Where generators are totally enclosed and water cooled (TEWAC), the generator should be designed for an inlet water temperature of 32 °C. For inlet temperatures exceeding 32 °C, the generator may be specifically designed for the higher inlet temperature or be derated from the 32 °C rating in accordance with manufacturer's recommendation. Generators should be properly rated for the ambient temperature in which they operate. See 1.5.1 for the applicable ambient temperature requirements. Special consideration should be given for generators installed in unit enclosures for higher than normal ambient conditions.

--`,,`-`-`,,`,,`,`,,`---
Copyright © 2002 IEEE. All rights reserved.

Copyright The Institute of Electrical and Electronics Engineers, Inc.
Provided by IHS under license with IEEE
No reproduction or networking permitted without license from IHS
Not for Resale

In determining the number and capacities of generating sets to be provided for a vessel, careful consideration should be given to the normal and maximum load demands (i.e., load analysis) as well as for the safe and efficient operation of the vessel when at sea and in port. The vessel must have at least two generating sources. For ships, the number and ratings of the main generating sets should be sufficient to provide one spare generating set (one set not in operation) at all times to service the essential and habitable loads. For MODUs, with the largest generator offline, the combined capacity of the remaining generators must be sufficient to provide normal (nondrilling) load demands.

For vessels propelled by electric power and having two or more constant-voltage, constant-frequency, main power generators, the ship service electric power may be derived from this source and additional ship service generators need not be installed, provided that with one main power generator out of service, a speed of 7 knots or one-half of the design speed (whichever is the lesser) can be maintained. The combined normal capacity of the operating generating sets should be at least equal to the maximum peak load at sea. If the peak load and its duration is within the limits of the specified overload capacity of the generating sets, it is not necessary to have the combined normal capacity equal to the maximum peak load. (See Clause 31.)

A generator driven by a main propulsion unit (shaft generator) that is intended to operate at constant speed (e.g., a system in which vessel speed and direction are controlled only by varying propeller pitch) may be considered to be one of the required ship service generators, provided it is able to supply the required power even with the vessel stopped.

Shaft generator installations that do not comply with the criteria given in this subclause may be fitted in addition to the above-required generators, provided that an alternative source of electrical power, having a capacity sufficient for the loads necessary for propulsion and safety of the vessel, can be brought on line automatically within 45 s when the shaft generator fails to maintain voltage and frequency within prescribed limits.

If shaft generators are employed at sea, where the shaft speed is not constant, then suitable means of control should be provided so that the speed of the main engine does not drop below the shaft generator critical operating speed until an auxiliary generator is automatically started. This will enable a load transfer to be made to prevent a blackout while not impairing the ability of the vessel to be maneuvered from the navigating bridge.

In selecting the capacity of an ac generating plant, particular attention should be given to the starting current of ac motors supplied by the system. With one generator held in reserve and with the remaining generator set(s) carrying the minimum load necessary for the safe operation of the ship, the voltage dip resulting from the starting current of the largest motor on the system should not cause any motor already running to stall or control equipment to drop out. It is recommended that this analysis be performed when the total horsepower of the motors capable of being started simultaneously exceeds 20% of the generator nameplate kVA rating. The generator prime-mover rating may also need to be increased to be able to accelerate motor(s) to rated speed. Techniques such as soft starting (e.g., reduced voltage autotransformer starters, electronic soft starters, and variable frequency drives) may be utilized to reduce the required capacity of generators when motor starting is of concern.

7.4.3 Generator design

Revolving field, brushless-type generators are recommended to eliminate all arcing contacts and to reduce maintenance requirements. The use of permanent magnet exciters should be considered. If a residual magnetism type exciter is used, it should have the capability of voltage buildup after 2 months without operation. It is recommended that generators have a design temperature rise of 80 °C, by resistance, (NEMA Class B), but be constructed with a minimum of NEMA Class F insulation to provide optimum balance between initial cost and long-life operations. See 1.5.1 for the applicable ambient temperature requirements.

Copyright © 2002 IEEE. All rights reserved.
Copyright The Institute of Electrical and Electronics Engineers, Inc.
Provided by IHS under license with IEEE
No reproduction or networking permitted without license from IHS
Not for Resale

Generators normally are designed for 40 °C ambient temperatures, and thus, they should be derated in accordance with manufacturer's recommendations if operated in higher ambient temperatures.

Design temperature ratings for generators are based on the maximum insulation system temperature at the hottest spot, as shown in Table 8. This is referred to as the total temperature rating and consists of the ambient temperature plus a temperature rise plus hot spot allowance.

Table 8—NEMA design class temperature rating

NEMA design class	Total temperature rating (°C)
B	130
F	155
H	180

It is recommended that generators have a NEMA design B total temperature rating and rise in accordance with Table 9 (at the most ambient temperatures) and be constructed with a minimum of NEMA Class F insulation to provide optimum balance between initial cost and long-life operations. See 1.5.1 for the applicable ambient temperature requirements.

Table 9—Temperature ratings of generators

Machine part	Method of measurement	Ambient temperature (°C)	Temperature rise (°C)	Allowable hot spot rise (°C)	Total temperature (°C)
All windings	Resistance	45	75	10	130
Windings 1563 kVA and less	RTD	45	85	0	130
Windings 1563 kVA and above					
a) < 7000 V	RTD	45	80	5	130
b) > 7000 V	RTD	45	95	0	130
Field winding	Resistance	45	80	5	130
All windings	Resistance	50	70	10	130
Windings 1563 kVA and less	RTD	50	80	0	130
Windings 1563 kVA and above					
a) < 7000 V	RTD	50	75	5	130
b) > 7000 V	RTD	50	80	0	130

Copyright © 2002 IEEE. All rights reserved.

Copyright The Institute of Electrical and Electronics Engineers, Inc.
Provided by IHS under license with IEEE
No reproduction or networking permitted without license from IHS
Not for Resale

Table 9—Temperature ratings of generators *(continued)*

Machine part	Method of measurement	Ambient temperature (°C)	Temperature rise (°C)	Allowable hot spot rise (°C)	Total temperature (°C)
All windings	Resistance	45	75	10	130
Field winding	Resistance	50	75	5	130
RTD = Resistance temperature detection.					

Generators should be designed and specified on total temperature rating, including ambient temperature, temperature rise, and any hot spot allowance. The user should provide the necessary information to the manufacturer so the generator can be properly designed. In some cases, a generator based on the industry standard 40 °C ambient temperature may be used or specified. In these cases, the machine should be derated in accordance with manufacturer's recommendations for operating at higher ambient temperatures.

The rotor insulation shall have Class F (155 °C) total temperature rating and operate at a Class B temperature rise over the ambient temperature specified for the location (i.e., 45 °C or 50 °C). For longer rotor life, a Class H (180 °C) insulation system operated at a Class B rise could be considered.

For generators requiring peak and peak reserve capabilities, the total temperature allowance may go up to the next class rating. For instance, the Class B maximum temperature would be 155 °C and Class F would be 180 °C.

Generator windings should be designed with quality insulation materials that are resistant to oil, water, and salt-laden atmospheres.

It is recommended that all form-wound coils for ac generators utilize vacuum-pressure impregnated solvent-less epoxy insulation systems. After each vacuum-pressure-impregnation (VPI) cycle, stators should undergo a rotating cure process. It is recommended that after final cure, the windings shall be given an anti-fungal treatment. If verification of the VPI epoxy resin and chemical polymerization (gel time) is required, it should be done in accordance with ASTM D247 I.

Generators installed in the following locations shall have minimum requirements and ratings as shown:

a) For voltages less than 1000 V, generators located in enclosed spaces that prevent direct exposure to outdoor conditions, open dripproof or minimum IP22 enclosures may be used.
b) For voltages equal to or greater than 1000 V, generators located in enclosed spaces that prevent direct exposure to outdoor conditions, WPI, WPII, or minimum IP 23 enclosures may be used. The terminal boxes require NEMA 3 or IP44 protection.

Generators exposed to weather should be totally enclosed fan cooled (TEFC), totally enclosed with either air to air (TEAAC), totally enclosed air to water (TEWAC), or provided with an IP56 enclosure. Where TEWAC enclosures are used on generators, they shall be of double tube construction and be equipped with leak detection.

The generator winding shall be capable of withstanding, without mechanical damage, for 30 seconds, a bolted three-phase and phase-to-ground short-circuit at its terminals when operating at the highest capability kVA, rated power factor, and at 5% overvoltage.

The windings shall also be capable of withstanding, without damage, any other short-circuit at its terminals of 30 seconds duration or less, provided the machine phase currents under fault conditions are such that the negative sequence current (I_2) expressed in terms of per unit stator current at highest capability kVA, and

Copyright © 2002 IEEE. All rights reserved.
Copyright The Institute of Electrical and Electronics Engineers, Inc.
Provided by IHS under license with IEEE
No reproduction or networking permitted without license from IHS
Not for Resale

the duration of the fault in seconds (t) are limited to values, which given by the integrated product of $(I_2)^2t$ (negative phase sequence current squared times time), is equal to or less than 40.

The generator shall be capable of withstanding for 10 seconds, without damage, an excitation level in the field winding corresponding to a fault current of 300% of design full load current in addition to associated short-circuit heating and forces in the armature winding.

Generators shall be capable of withstanding the following without damage: 10% overload for 2 hours and 50% overload for 30 seconds.

Special evaluation of winding geometry must be considered if dissimilar machines are to be paralleled. Equipment manufacturers should be consulted for equipment compatibility.

7.4.4 Terminal arrangements and incoming cables

Generators should be provided with silver- or tin-plated copper fixed terminals used for connection of incoming cable and lugs or provided with copper terminal leads suitably secured to the generator frame. Terminals and terminal leads shall be adequately sized for the rating of the generator. Fixed terminals shall be supplied with suitable provisions for NEMA or IEC lugs with a minimum of two holes. Terminal lugs shall be suitable for the conductor size and temperature rating of the incoming cables. It may be necessary to provide a transition bus to accommodate metric and ANSI/NEMA dimensions.

Terminal boxes should be of sufficient size to accommodate the generator leads and terminals without crowding or exceeding the bend radius of the leads. Where shielded cables are used on generation voltages of 3 kV and higher, sufficient straight space shall be provided between the point of cable entrance and terminals for installation of stress cones. Space should also be provided for current transformers used for differential, other protection. or metering. Additional space may be necessary for bus bars and other means of interconnection of neutral leads for six lead machines. Each box should be of adequate mechanical strength and rigidity to protect the contents and to prevent distortion under all normal conditions of service. Cables of differing voltage should not be included in the same terminal box unless each voltage is clearly and permanently identified and effective barriers provided within the enclosure to separate each voltage. Separate junction boxes should be provided for instrumentation devices such as stator winding RTDs or generator-bearing vibration sensors.

The conductors from each generator to any switchboard should be sized for no less than 115% generator continuous rating and 115% above the overload rating when machines are specified with overload ratings. Thermal limits of the conductor and terminal devices, including the generator circuit breaker, shall not be exceeded under the ambient temperature specified.

7.4.5 Heaters

Means should be provided to prevent the absorption of moisture by machine windings and condensation of moisture onto the machine's internal surfaces. These means should be automatically energized when the generator is stopped or at any time that the temperature of the windings or metal parts of the generator are lower than the ambient temperature.

7.4.6 Nameplates

Generators should be supplied with nameplates of corrosion-resistant material marked with the following information:

a) Name of manufacturer
b) Kilovoltamperes or kilowatts
c) Manufacturer's type and frame designation
d) Manufacturer's serial number

Copyright © 2002 IEEE. All rights reserved.

Copyright The Institute of Electrical and Electronics Engineers, Inc.
Provided by IHS under license with IEEE
No reproduction or networking permitted without license from IHS
Not for Resale

e) Output: in kilovoltamperes or kilowatts
f) Voltage rating
g) Current rating
h) Rated power factor
i) Full load amperes
j) Frequency
k) Number of phases
l) Rated temperature rise
m) Insulation class
n) Service factor (or intermittent duty rating)
o) Ambient temperature rating
p) Full load speed in revolutions per minute
q) For anti-friction bearings, the manufacturer and model number
r) For flood-lubricated bearings, the oil rated in liters per minute (gallons per minute)
s) For pressure-lubricated bearings, the oil pressure required, in Newtons per square millimeter (pounds per square inch gauge)
t) Rated main field voltage
u) Rated main field current

7.4.7 Voltage regulation

At least one voltage regulator shall be provided for each generator. Voltage regulation should be automatic and should function under steady state load conditions between 0% and 100% load at all power factors that can occur in normal use. Voltage regulators should be capable of maintaining the voltage within the range of 97.5% to 102.5% of the rated voltage. A means of adjustment should be provided for the voltage regulator circuit. Voltage regulators should be capable of withstanding shipboard conditions and should be designed to be unaffected by normal machinery space vibration.

Solid state voltage regulators are recommended for high reliability, long life, fast response, and stable regulation. Regulator systems should be protected from underfrequency conditions. It is recommended that voltage regulators for machines rated in excess of 150 kW be provided with underfrequency and overvoltage sensors for protection of the voltage regulators.

Under motor starting or short-circuit conditions, the generator and voltage regulator together with the prime mover and excitation system should be capable of maintaining short-circuit current of such magnitude and duration as required to properly actuate the associated electrical protective devices. This shall be achieved with a value of than not less than 300% of generator full-load current for a duration of 2 seconds, or of such additional magnitude and duration as required to properly actuate the associated protective devices.

For single-generator operation (no reactive droop compensation), the steady state voltage for any increasing or decreasing load between zero and full load at rated power factor under steady state operation should not vary at any point more than ± 2.5% of rated generator voltage. For multiple units in parallel, a means should be provided to automatically and proportionately divide the reactive power between the units in operation.

Under transient conditions, when the generator is driven at rated speed at its rated voltage, and is subjected to a sudden change of symmetrical load within the limits of specified current and power factor, the voltage should not fall below 80% nor exceed 120% of the rated voltage. The voltage should then be restored to within ± 2.5% of the rated voltage in not more than 1.5 s.

In the absence of precise information concerning the maximum values of the sudden loads, the following conditions should be assumed: 150% of rated current with a power factor of between 0.4 lagging and zero to be applied with the generator running at no-load, and then removed after steady state conditions have been reached.

Copyright © 2002 IEEE. All rights reserved.
Copyright The Institute of Electrical and Electronics Engineers, Inc.
Provided by IHS under license with IEEE
No reproduction or networking permitted without license from IHS
Not for Resale

For two or more generators with reactive droop compensation, the reactive droop compensation should be adjusted for a voltage droop of no more than 4% of rated voltage for a generator. The system performance should then be such that the average curve drawn through a plot of the steady state voltage vs. load for any increasing or decreasing load between zero and full load at rated power factor, droops no more than 4% of rated voltage. No recorded point varies more than ± 1% of rated generator voltage from the average curve.

Isochronous operation of a single generator operating alone is acceptable. However, where two or more generators are arranged to operate in parallel, it is recommended that isochronous kilowatt load sharing governors and voltage regulation with reactive differential compensation capabilities be provided. Care should be taken if operating machines in parallel to ensure that the system minimum load does not decrease and cause a reverse power condition.

If voltage regulators for two or more generators are installed in the switchboard and located in the same section, a physical barrier should be installed to isolate the regulators and their auxiliary devices.

Where power electronic devices (such as variable frequency drives, soft starters, and switching power supplies) create measurable waveform distortions (harmonics), means should be taken to avoid malfunction of the voltage regulator, e.g., by conditioning of measurement inputs by means of effective passive filters.

Power supplies and voltage sensing leads for voltage regulators should be taken from the “generator side” of the generator circuit breaker. Normally, voltage sensing leads should not be protected by an overcurrent protection device. If short-circuit protection is provided for the voltage sensing leads, this short-circuit protection should be set at no less than 500% of the transformer rating or interconnecting wiring ampacity, whichever is less. It is recommended that a means be provided to disconnect the voltage regulator from its source of power.

7.5 Generator metering and protection—general

7.5.1 Overload and short-circuit

It is recommended that generators be protected with molded case or power circuit breakers. If a power circuit breaker is used, the use of short-time and long-time breaker trips is recommended to permit better coordination with other breakers or fuses in the distribution system. The overcurrent trip setting should not exceed 115% of the generator full load current. If a molded case circuit breaker is used, a circuit breaker rated for continuous operation at 100% of its trip rating (i.e., a 100% rated breaker as opposed to a standard molded case breaker) will allow full utilization of the generator nameplate capacity. The use of series boost equipment or a permanent magnet generator (PMG) should be considered if a molded case circuit breaker is used to provide adequate sustained short-circuit current for proper operation of the breaker during fault conditions.

In machinery spaces with two or more generators not intended to be operated in parallel, generator circuit breakers should be electrically or mechanically interlocked to prevent accidental out-of-phase paralleling. Molded case circuit breakers may be used for single or parallel operation; however, for larger sized units that will be paralleled, power circuit breakers are recommended because of their faster operating speed and greater flexibility.

It is recommended that instantaneous breaker trips not be used on single generators or two generators operated in parallel or generators that have differential protection.

Where three or more generators are operated in parallel and are not equipped with differential protection, the generator breakers should have instantaneous trips that are set at a value slightly in excess of the maximum short-circuit contribution of the individual generator.

Interrupting capacity of circuit breakers shall be adequate to interrupt available fault current, considering short-circuit current magnitude and power factor (reference IEEE Std C37.04-1999, IEEE Std C37.13-1990,

--`,,`-`-`,,`,,`,`,,`---
Copyright © 2002 IEEE. All rights reserved.

Copyright The Institute of Electrical and Electronics Engineers, Inc.
Provided by IHS under license with IEEE
No reproduction or networking permitted without license from IHS
Not for Resale

UL 489-1996, IEC 60298, or IEC 60947). The available fault current should be reevaluated when additional generating capacity is added to an existing system.

7.5.2 Reverse power

When two or more generators are to operate continuously in parallel, each unit should be provided with a reverse power relay to trip the generator breakers in the event of reverse power flow.

The reverse power relays should operate on reverse power values of 15% or greater of the generator kilowatt rating for diesel-driven generators, 10% or greater for gas turbine-driven generators, and of 5% or greater for steam turbine-driven generators. If reverse power relays are used that may operate at very low values of power reversal, a time-delay should be incorporated to prevent the tripping of generator circuit breakers during switching operations. When installing reverse power relays, the prime-mover manufacturer should be consulted. When circulating currents are present, reverse power relays should be of the true power (Watt calculating) type to prevent unreliable operation.

7.5.3 Undervoltage and overvoltage sensing devices

Undervoltage and overvoltage sensing devices with time delay trips should be considered for protection of the electrical system.

7.5.4 Underfrequency and overfrequency sensing devices

Underfrequency and overfrequency sensing devices with time delay trips should be considered for protection of electrical systems.

7.5.5 Synchronizing controls

It is recommended that the controls of generators intended to be paralleled be equipped with

a) Synchroscopes or synchronizing lights, or both, to show when generators are in phase. A synchroscope provides more accurate indication of phase relationship and should be considered in most applications for smoother switching operations. The synchronizing indicators should be visible from the speed and voltage setting controls of the generator being synchronized.
b) A synchronizing check relay should be installed in the breaker closing circuit of electrically operated circuit breakers to prevent out-of-phase paralleling. Consideration should be given to the installation of automatic synchronizing controls on units greater than 250 kW.
c) Interlocking controls should be installed to assure that all other generator circuit breakers for nonoperating generators and incoming feeders are open when an oncoming generator breaker is closed on a dead bus.
d) On ac switchboards, the synchroscope and synchronizing lamps should be located so as to be readily visible from the position at which the operator controls the incoming generators. Voltage-adjusting potentiometers should be located close to their respective generator voltmeters. Each frequency meter should be readable from the prime-mover speed control switch, or potentiometer.

7.5.6 Ground-fault detection

When the electrical system is ungrounded, a bus ground-fault indication system is recommended for each bus that has a power source connected and can be isolated by bus disconnect means. See 5.9.7.

When the electrical system is high-resistance grounded, a ground-fault alarm is recommended.

When the electrical system is low-resistance grounded, ground-fault protective devices should be provided to open the generator breaker if coordinated downstream devices do not clear the fault.

Copyright © 2002 IEEE. All rights reserved.
Copyright The Institute of Electrical and Electronics Engineers, Inc.
Provided by IHS under license with IEEE
No reproduction or networking permitted without license from IHS
Not for Resale

7.5.7 Control voltage

It is recommended that control voltage for generator instrumentation be nominal 240 V ac or less. The use of an ac capacitor trip unit or a dedicated battery for dc voltage is recommended for the circuit breaker trip coils on power breakers to ensure trip voltage availability.

7.5.8 Special considerations

For generators 1000 kVA and larger or with voltage ratings greater than 600 V (NEMA) or 1000 V (IEC), protective relays are recommended to operate generator circuit breakers. These relays provide greater flexibility in setting and are more easily tested than are circuit breakers with direct-acting, integral trips. The following protective relaying should be considered in addition to (or in lieu of) the minimum relaying listed in 7.5.1 through 7.5.6.

a) Voltage restraint or voltage controlled overcurrent relays.
b) Instantaneous differential current relays to detect internal generator faults (for six lead machines).
c) Reverse VARs or loss of excitation (loss of field) relays on paralleled units
d) Ground-fault sensing relays on grounded systems
e) Negative phase sequence overcurrent relay for protection against unbalanced conditions, for units over 600 V.
f) Stator winding temperature relay for units over 600 V.
g) Voltage balance relay on machines greater than 3000 kW and over 600 V, where a separately derived power source is feeding the voltage regulator.

NOTE—Several of these functions may be combined in a multifunction relay.

Reference IEEE Std 242™-2001 for additional information on generator protection.

7.5.9 Multiple generator applications

When a shutdown is initiated, it is recommended that in multiple generator applications, the generator main circuit breaker or contactor be opened by either the prime mover shut-down system or the generator control panel.

7.5.10 Metering

Minimum metering should include an ammeter (with a selector switch to meter all phases), a frequency meter, a voltmeter, and a voltmeter selector switch (to provide metering of all phases and one phase of bus voltage, if applicable). A running time meter, a power factor meter, a varmeter, and a wattmeter are optional.

For generators intended for parallel operation, the metering should be as described in this subclause, and in addition a wattmeter should be installed.

Metering accuracy current transformers and voltage transformers shall be utilized to feed the generator measurement instrumentation.

7.6 Minimum equipment for ac generator switchboard

The equipment listed in this subclause should be provided for each generator. This equipment may be located on the generator breaker or generator control panel if located adjacent to the generator beaker. The generator breakers should be located in their respective switchboards (i.e., main or emergency) and have the same voltage, current, and interrupting ratings as other breakers specified in Clause 8.

Copyright © 2002 IEEE. All rights reserved.

Copyright The Institute of Electrical and Electronics Engineers, Inc.
Provided by IHS under license with IEEE
No reproduction or networking permitted without license from IHS Not for Resale

A drawout or plug-in circuit breaker for each generator. All insulated case power circuit breakers with frames rated 800 A or greater should have operating handle extensions. Where more than one power source (e.g., generators or shore power) is available and the sources are not intended to operate in parallel, a mechanical or electrical circuit breaker interlock to prevent paralleling should be provided. Where automatic paralleling is required, electrically operated power circuit breakers with closing speeds of five cycles or less should be provided.

On low-voltage systems, when a molded case circuit breaker is used, an undervoltage release auxiliary device on each generator circuit breaker is required for automatic tripping when a generator shuts down or a protective relay operates. Medium-voltage and low-voltage power circuit breakers shall have shunt-trip devices, inherent in their design, that should be used for this purpose. On each low- and medium-voltage generator circuit breakers, an undervoltage release device should be provided that opens the generator main circuit breaker when the prime mover is shut down and for other abnormal conditions that effect the generator voltage.

For each electrically operated circuit breaker, a circuit breaker control switch should be provided with open (green) and closed (red) indicator lights. In addition, a breaker disagreement indicating light (amber) may be used. The closed indicator light may be used to monitor the breaker trip coil continuity.

For metering, see 7.5.10.

For each generator rated 400 kW and above, a temperature detection instrument with a selector switch (or multifunction device) having positions to read all temperature detectors (RTDs) in each winding should be used. As an alternative, a multifunction device that can display and alarm each of the winding and bearing temperatures may be used.

An indicator light permanently connected to the generator side of each generator circuit breaker should be used.

A speed control device for the prime mover of each generator capable of parallel operation should be used.

A voltage control device for the adjustment of the voltage regulator of each generator, to set the proper voltage or adjust the reactive load sharing of machines operating in parallel, should be used.

A circuit breaker to feed the heater in each generator via a relay or auxiliary contacts on the generator circuit breaker should be used. See 7.4.5. This circuit should be fed from a separate power supply.

When two or more generators are to operate in parallel, a reverse power relay for each generator should be used. See 7.5.2.

When two or more generators are to operate in an automatic start and parallel mode, a frequency permissive relay and a voltage permissive relay should be provided for each generator.

Where two or more generators are to operate in parallel, a synchroscope and synchronizing lamps with selector switch to permit manual paralleling in any combination should be used. A synchronizing check relay should be provided. When fully automatic paralleling and a power management system or remote operation of the generating plant is provided, an automatic speed or speed and voltage matching synchronizing device with dead-bus feature, or a separate dead-bus relay, should be installed.

When a fully automatic power management system is provided, that allows for dead-bus starting of the generators, sensing logic should be provided to prevent a generator from being connected to the bus out-of-phase. See 7.5.5.

Copyright © 2002 IEEE. All rights reserved.
Copyright The Institute of Electrical and Electronics Engineers, Inc.
Provided by IHS under license with IEEE
No reproduction or networking permitted without license from IHS
Not for Resale

To provide for reliable operation, the following shall be provided:

a) An automatic voltage regulator with voltage adjusting device
b) A switch for transferring from automatic to manual voltage regulator control
c) A null meter for voltage difference between automatic and manual regulator position
d) A manual voltage regulator with optional voltage follow feature or a rheostat.

As an option, the generator may have dual redundant automatic voltage regulators (a lead and backup unit). Each AVR shall be capable of independent operation. Upon failure of the lead AVR, control shall be automatically transferred to the backup unit. The transfer time shall be less than 250 milliseconds. Returning control to the lead unit shall be done manually.

A manual voltage control rheostat shall not be required in addition to the automatic voltage regulators (AVR). This rheostat may be installed as an option and, if installed, will be useful for controlling the generator current when drying the generator windings. This may be accomplished by running the generator prime mover at rated speed, short-circuiting the generator terminals, and adjusting the voltage control rheostat to cause the generator to produce full load current into the shorted terminals.

A double-pole field switch with discharge clips and resistor for each generator should be provided when the generator field may be disconnected. This switch is not required on generators that have rotating brushless or static excitation systems. A voltage adjusting device for each generator AVR. This device shall be grouped with other generator controls and be readily accessible to the generator operator.

Ground-detection provisions or a continuous insulation monitor with an alarm and an optional ohmmeter should be provided for each separate bus of the switchboard. See 7.5.6.

Current and potential (voltage) transformers, as required. Potential (voltage) transformers should be used as necessary to ensure a maximum voltage of 240 V on hinged instrument panels.

If extensive automatic control logic is required in the switchboard for automatic generator starting and paralleling, power management systems or sequential load shedding that would normally require a large number of electromechanical relays, consideration should be given to the use of programmable logic controllers (PLCs) or similar control systems. One PLC should be utilized per machine. If common functions are required for all machines, a master PLC should be utilized in addition to the individual PLCs. The use of one PLC for the complete generation system is not recommended.

For synchronous generators, IEEE Std 115-1995 or IEC 60034 should be referenced.

8. Switchboards

This clause includes switchboards, metal-enclosed switchgear, metal enclosed low-voltage power circuit breaker switchgear, and metal-clad switchgear. All of this equipment is included in the generic term “switchboard.”

8.1 Switchboard arrangement criteria

To increase the safety of the ship, when the main source of electrical power is necessary for propulsion and maneuvering of the ship, the electrical system, including switchboards, shall be so arranged that the electrical supply necessary for propulsion and maneuvering will be available at all times, even after incurring any single fault. While arranging the electrical system so that the electrical supply will be available at all times increases the safety of the ship, this act alone does not ensure the safety of the ship.

--`,,`-`-`,,`,,`,`,,`---
Copyright © 2002 IEEE. All rights reserved.

Copyright The Institute of Electrical and Electronics Engineers, Inc.
Provided by IHS under license with IEEE
No reproduction or networking permitted without license from IHS Not for Resale

Load shedding or equivalent arrangements shall be provided to protect the generators against sustained overload.

Where the main source of electric power is necessary for propulsion of the ship, the main bus bar shall be subdivided into at least two parts that normally are connected by circuit breakers or other approved means. So far as is practical, the connection of generating sets and other duplicated equipment shall be equally divided between the parts.

Where transformers constitute an essential part of the electrical supply system required by this subclause, the system and switchboards shall be so arranged as to ensure the same continuity of the supply as is stated in this subclause.

Switchboards should not be accessible to unauthorized personnel.

One set of interconnection cables or their equivalent should be provided for each installation to permit operation and testing of the removable element when it is removed from the cell. In addition, fixed or portable test and grounding devices may be provided for safe maintenance purposes in accordance with IEEE Std C37.20.2-1999 or IEC 60298.

If arc-resistant type medium-voltage switchboards designed in accordance with Appendix AA of IEC 60298 or IEEE Std C37.20.7-2000 are utilized in shipboard applications, specific ventilation provisions or other means should be provided so as not to exhaust high-temperature arc plasma and arc products into confined equipment spaces aboard ship during an arc fault expulsion. The ducting or routing of high-temperature arc products should be considered in the overall ship or vessel design so as not to adversely impact personnel or other unassociated equipment. In addition, if arc-resistant switchgear is utilized, with the appropriate ventilation or ducting systems for routing of high-temperature arc products, the switchgear should be provided with test certificates that include the type of ventilation or ducting system. If additional back pressure is introduced during arc expulsion that is not consistent with the design of the equipment, then injury to personnel and significant equipment damage may result.

It is recommended that medium-voltage switchboards be installed in locations where personnel are not routinely present.

8.2 Installation and location

The switchboards should be installed in a dry place, away from steam, water, and oil pipes. When piping must be in the vicinity of the switchboard, dripproof shielding should be installed and piping joints should be welded. Generator switchboards including generator control panels (if supplied) may be located in the same space as the generators they control. An environmental enclosure for the switchboard, such as may be provided by a machinery control room situated within the machinery casing, is not considered to separate the switchboard from the generator.

Where generators are installed on weather decks, the generator switchboard and control equipment should be located in an enclosed space located as close as possible to the generator.

The switchboard should be accessible from the front and rear, except for switchboards that are enclosed at the rear and can be fully serviced from the front. Access entrances, and operating clearances in front and rear of the switchboards for personnel safety, should be in accordance with Table 10. Additional space or clearance may be required for maintenance of withdrawable elements.

Switchboards should be installed on a foundation that rises above the adjacent deck plating. To avoid excessively high foundations, consideration may be given to protecting the lower portion of the switchboard by watertight barriers and suitable drains. Switchboards may be self-supporting or braced to the bulkhead or

Copyright © 2002 IEEE. All rights reserved.
Copyright The Institute of Electrical and Electronics Engineers, Inc.
Provided by IHS under license with IEEE
No reproduction or networking permitted without license from IHS
Not for Resale

deck above. If a switchboard is braced, the means of bracing must be flexible to allow deflection of the ship's structure without buckling the switchboard assembly. Nonconductive electrical floor matting meeting ASTM D-178-2001 J6-7 Type 2, Class 2, shall be installed in front of switchboards. The matting shall extend the entire length of the switchboard and be of sufficient width to suit the operating clearance specified.

When the space in the rear of the switchboard could be accessible to unauthorized personnel, the rear spaces should be protected within an enclosed lockable area. The area enclosure may be constructed of expanded metal sheets, or solid metal sheets with suitable ventilating louvers at the top and bottom. Where this arrangement is not feasible, rear covers may be mounted on the switchboard framework that are bolted on and easily removable. Alternatively, hinged covers may be used such that the cover may be fully opened. The hinged panels shall have provisions for locking.

Switchboard enclosures are required to have the following degrees of protection based on voltage class and installation location:

— Low-voltage switchboards installed in dry or climate-controlled spaces shall have a minimum enclosure rating of IP-20 (NEMA 1) and in machinery spaces, IP-22 (NEMA 2 or 3R).
— Medium-voltage switchboards installed in dry /or climate-controlled spaces shall have a minimum enclosure rating of IP-20 and in machinery spaces, IP-23 (NEMA 2 or 3R).

Switchboard devices operating at 42 V or greater that are mounted on hinged panels should include means to prevent accidental electrical shock by maintenance personnel. Front-panel switchboard sections supporting instruments, relays, switches, or other devices should be hinged to permit periodic access. Hinged panel sections exceeding a height of 1100 mm or a width of 610 mm should be provided with panel positioners to hold the door in the open position. Bolted-on, removable panel sections may be used where periodic inspection, adjustment, or maintenance is not required. If the switchboard is not accessible from the rear, components and bus bar connections (except bus connections for draw-out circuit breakers) should be within 460 mm from the front of the switchboard.

A nonconducting hand rail or rails attached to the front of the switchboard or panels should be provided across the full length of the switchboard. A horizontal rail is recommended, but vertical handrails on individual sections are acceptable. Nonconducting guard rail protection should also be provided across the rear of all switchboards, even if removable rear covers are provided.

Table 10—Minimum clear working space

Working clearances		
Nominal voltage to ground	**Condition**	**Clearance (m)**
0–150	1	0.91
0–150	2	0.91
0–150	3	0.91
151–600	1	0.91
151–600	2	1.07
151–600	3	1.22
601–2500	1	0.91
601–2500	2	1.22

--`,,`-`-`,,`,,`,`,,`---
Copyright © 2002 IEEE. All rights reserved.

Copyright The Institute of Electrical and Electronics Engineers, Inc.
Provided by IHS under license with IEEE
No reproduction or networking permitted without license from IHS
Not for Resale

Table 10—Minimum clear working space *(continued)*

Working clearances		
Nominal voltage to ground	**Condition**	**Clearance (m)**
601–2500	3	1.52
2501–9000	1	1.22
2501–9000	2	1.52
2501–9000	3	1.82
9001–25 000	1	1.52
9001–25 000	2	1.82
9001–25 000	3	2.74
25 001–35 000	1	1.82
25 001–35 000	2	2.44
25 001–35 000	3	3.05

Where the "conditions" are as follows:
Condition 1: Exposed live parts on one side and no live or founded parts on the other side of the working space, or exposed live parts on both sides effectively guarded by suitable insulating materials. Insulated wire or insulated busbars operating at not over 300 V shall not be considered live parts.
Condition 2: Exposed live parts on one side and grounded parts on the other side.
Condition 3: Exposed live parts on both sides of the workspace (not guarded as in Condition 1) with the operator between.
Exception 1—Working space shall not be required in back or sides of assemblies, such as dead-front switchboards and motor control centers, where there are no renewable or adjustable parts, such as fuses or switches on the back or sides and where all connections are accessible from locations other than the back or the side.
Exception 2—The space in the rear of a switchboard shall be ample to permit maintenance, in general not less than 610 mm in the clear, except this may be reduced to 460 mm in way of stiffeners and frames. This exception applies only where work is to be performed on deenergized equipment. This distance is compatible with minimum walkway clearances for marine applications.

8.3 Low-voltage switchboards (600 V ac and less for ANSI; 1000 V ac and less for IEC)—description and requirements

Switchboards operating at a root-mean-square (RMS) voltage less than 1000 V should meet the requirements of UL 891 or IEC 60947 for dead-front switchboards or IEEE Std C37.20.1-1993, UL 1558-1999, or IEC 60947 for low-voltage, metal-enclosed power circuit breaker switchgear.

Circuit breakers installed in low-voltage switchboards should meet the following requirements for the class of service intended:

— Power circuit breakers installed in low-voltage switchboards should meet the requirements of IEEE Std C37.13-1990 or IEC 60947-2. When installed in low-voltage, metal-enclosed switchgear in accordance with IEEE Std C37.20.1-1993 or IEC 60947-2, these breakers shall be drawout type.
— Power circuit breakers with proper insulation barriers may also be installed in dead-front switchboards per UL 891-1998 or IEC 60947-2. These breakers shall be drawout type.

Copyright © 2002 IEEE. All rights reserved.
Copyright The Institute of Electrical and Electronics Engineers, Inc.
Provided by IHS under license with IEEE
No reproduction or networking permitted without license from IHS
Not for Resale

- Low-voltage molded or insulated case circuit breakers installed in switchboards shall meet the requirements of UL 489-1996 including all marine supplements, or shall meet the requirements of IEC 60947-2 including the additional performance requirements as defined in the marine supplements of UL 489-1996. The insulated case circuit breakers shall be drawout type, and the molded case breakers shall be mounted on marine dead-front removable (plug-in) connectors (both line and load) to facilitate maintenance and replacement without a complete switchboard outage.
- All buses, both power and grounding, within the switchboard shall be copper. All joints shall be either tin-plated or silver-plated and installed using nuts, bolts, and Belleville-type washers or similar locking means.
- Terminal blocks should be provided on the framework or on interior panels mounted to the framework, closely adjacent to the wiring loop to hinged panels for disconnecting the wires.
- Properly marked terminal blocks should be provided for all outgoing instrument and control wires, and for wire connections from one shipping section of the switchboard to another.
- Current transformer (CT) secondary windings shall not be fused. The secondary leads of current transformers shall be wired through current transformer shorting terminal blocks prior to connecting to components or terminal blocks.
- Internal switchboard wiring for control and instrument circuits should be either Type SIS, wire type equivalent to SIS and meeting the VW-1 flame test requirement, or one conductor wire meeting the requirements of IEC 60502-1 and IEC 60332-1. Minimum sizes shall be as follows: For control circuits 15 AWG (1.5 mm^2 for IEC wiring systems; see 1.7), for instrument circuits 18 AWG (1.0mm^2), or as allowed by IEEE Std C37.20-1987 or IEC 60947.
- Connections to hinged panels should be with extra-flexible type wire.
- Where twisted and shielded pairs are required for analog and digital signals within the switchboard, minimum #18 AWG (1.0 mm^2) conductors may be used. Circuit speed and the reduction of noise may require the use of shield over the individual pairs. For other cable types such as ribbon, fiber optic, and computer, used in low-power instrumentation, monitoring, or control circuits, the size of the wire should be based on manufacturer's recommendation.
- All groups of internal wiring should be adequately secured to the switchboard panels or framework in such a manner as to prevent chafing, cutting of the insulation, or excessive motion caused by vibration.
- All power cables should be secured adequately to prevent motion caused by vibration and to withstand the maximum short-circuit current.

8.4 Medium-voltage switchboards (0.601–38.0 kV ac for ANSI and 1.01–35.0 kV ac for IEC)—description and requirements

Medium-voltage power circuit breakers should be withdrawable, vacuum, or SF6 and be rated in accordance with IEEE Std C37.04-1999 or IEC 60056. Metal-clad switchgear including medium-voltage power circuit breakers should comply with the requirements found in IEEE Std C37.20.2-1999 or IEC 60298. All medium-voltage motor starters of the vacuum type should meet the requirements of UL 347-1993 or IEC 62271-100 and IEC 60694 and IEC 60470. See 8.3 for bus bar arrangements.

The construction should be similar to that described in 8.3, but with the following additional features:

- The primary or power-carrying buses, conductors, and connections should be covered with flame-retardant insulating material throughout. Each conductor should have an insulating covering that by itself will withstand the maximum rated line-to-line voltage between the conductor and outside surface of the insulating covering for a period of 1 min. Where possible, joints should be completely covered by insulating material or removable boots at the factory. For joints that must be made on shipboard, insulating material should be supplied for application in accordance with the switchboard manufacturer's instructions.
- Medium-voltage switchboards shall have a separate grounded metal compartments for all instruments, meters, relays, secondary control devices, terminal blocks, and their wiring. Any control or

Copyright © 2002 IEEE. All rights reserved.

Copyright The Institute of Electrical and Electronics Engineers, Inc.
Provided by IHS under license with IEEE
No reproduction or networking permitted without license from IHS
Not for Resale

instrument wiring, such as CT leads, that are run in compartments containing medium-voltage parts shall be mechanically protected by a metallic shield, braid, or similar means. The metallic shield or braid shall be positively grounded to the enclosure's ground bus.

— The door through which the circuit interrupting device is inserted into the housing may serve as an instrument or relay panel and may also provide access to a secondary or control compartment within the housing.

— Potential (voltage) transformers and their fuses should be mounted in a separate compartment with means for disconnecting from the primary circuit before access can be obtained to either the transformer or its primary fuses. Provision should be made for disconnecting or automatically grounding the secondary circuits when disconnecting the primary circuit. Provision should be made for momentarily grounding the primary of potential transformers during the disconnecting operation.

It is recommended that if medium-voltage switchboards are utilized, the primary controls for opening and closing the circuit breakers be located remotely from the switchboard.

8.5 Switchboards—application requirements

All devices should be capable of withstanding shipboard vibration without damage or faulty operation and should operate successfully when inclined at an angle of 45° in any direction from the vertical (see 1.5.1).

All switching devices, applied on or operated from power switchboards, should have a rated capacity at least as great as the maximum continuous current rating of the apparatus controlled. For apparatus having an overload rating of 30 min or more, all switching devices should have a rated capacity at least as great as the apparatus overload rating. For apparatus having high short-time current ratings, all switching devices should have a short-time rating equal to or greater than the apparatus being supplied.

All electrical indicating instruments should be switchboard-type or equivalent electronic-type except those for battery charging equipment, which may be of the panel type having an accuracy class of 2.0 or less. The switchboard-type or electronic-type instruments should have 1% accuracy and, in the case of switchboard type analog instruments, preferably have a 250° circular scale. Instruments and meters shall have 1-A or 5-A current /or 150-V potential coils for operation with instrument transformers.

Ammeter, voltmeter, and wattmeter scales should be of sufficient range to indicate maximum current, voltage, or power under normal operating conditions and should indicate not less than 110% to 150% of the normal current or power rating for circuits that are not subjected to other than momentary overload. For circuits that may be subject to 25% overloads, the ammeter, voltmeter, or wattmeter scale should be a minimum of 135% of nominal. Instruments should indicate the nominal rated or full load value at approximately 75% of the full deflection. It is recommended that for analog voltmeters, the nominal voltage is to be clearly marked, and for analog ammeters, the full load is to be clearly marked.

Instrument transformers shall be furnished in accordance with IEEE Std C57.13-1993 or IEC 60185 for current transformers and IEC 60186 for voltage transformers.

Current transformers shall have ratios of not less than 1.25 times the maximum demand current of the circuit being monitored.

Current and voltage transformers should have sufficient metering and relaying accuracy values that are properly matched for connected circuit burdens plus 20% additional capacity.

Voltage regulator elements provided for mounting in switchboards should be provided with enclosing cases to protect them from damage.

Copyright © 2002 IEEE. All rights reserved.
Copyright The Institute of Electrical and Electronics Engineers, Inc.
Provided by IHS under license with IEEE
No reproduction or networking permitted without license from IHS
Not for Resale

Feeder and branch circuits should be connected to the fuse end of switches that supply them in order to facilitate the safe replacement of fuses.

Corrosion-resistant parts should be in accordance with 1.8.1.

8.6 Circuit breakers—application

The continuous current rating of circuit breakers should be the current value that the circuit breakers will carry continuously without exceeding the specified temperature rise. Molded case breakers are normally rated to continuously carry 80% of their nominal rating; however, 100% rated molded case circuit breakers are available.

Low-voltage circuit breakers (open-frame or insulated or molded case) may be equipped with overcurrent trip devices of the electromechanical, electronic, or microprocessor type. The circuit breaker should be equipped with overcurrent trip devices that have long-time and instantaneous; or long-time and short-time; or long-time, short-time, and instantaneous characteristics. The time overcurrent devices should be adjustable on power circuit breakers but need not be adjustable on molded-case circuit breakers.

Medium-voltage class circuit breakers should use separate electromechanical- or electronic-type protective relays. In some cases, low-voltage power circuit breakers may use separate relays for overcurrent sensing. Separate overcurrent relays should have a current sensor in each phase.

Control power for tripping medium-voltage circuit breakers and, in some cases, low-voltage power circuit breakers should be from a battery source with automatic battery chargers. Where the battery can be disconnected for inspection and maintenance, the battery charger should be equipped with a battery eliminator type feature. Alternatively, capacitor trip devices may be used as a source of tripping power when dc power is not available. The capacitor trip device size should be sufficient for a minimum of two trip operation cycles.

For low-voltage circuit breakers, arcing contacts, except those used in molded case circuit breakers, should be easily renewable.

8.7 Temperatures

Switchboards and motor control centers as referenced in the national and international standards in 8.3 and 8.4 shall be designed to operate in an ambient temperature of 40 °C. For operation in other ambient temperatures greater than 40 °C (i.e., 45 °C or 50 °C), the load capability of the switchboards shall be rated (derated) in accordance with manufacturer's recommendations.

8.8 Arrangement of switchboard equipment

For generator circuit breakers, see 7.6.

The devices that are operated or observed from the front of the switchboard should be arranged to provide the greatest degree of safety and convenience for operating personnel. The uppermost position of the operating handle of manually operated 400-A frame size and larger circuit breakers should not be mounted higher than 1800 mm above the deck in front of the switchboard. A minimum clearance of 200 mm between live parts and the deck in front of the switchboard should be maintained. Other hand-operated devices that are required for the operation of the switchboard should not be mounted higher than 1980 mm above the deck in front of the switchboard.

Copyright © 2002 IEEE. All rights reserved.

Copyright The Institute of Electrical and Electronics Engineers, Inc.
Provided by IHS under license with IEEE
No reproduction or networking permitted without license from IHS Not for Resale

Particular attention should be given to the arrangement of buses and connections to provide space for cables and accessibility for making cable connections.

In general, all fuses, including those for instrument and control circuits, should be accessible from the front of the switchboard.

When rheostats or other devices that may operate at high temperatures are mounted in the switchboard, they should be located or isolated by barriers and naturally ventilated to prevent excessive temperature rise of the device or adjacent devices. When this cannot be accomplished, the heat-producing rheostat or other devices should be mounted remotely from the switchboard.

Buses and primary connections should be arranged so that for three-phase assembled switchboards, the phase sequence is A, B, C, front to back, top to bottom, and left to right, as viewed from the front of the switchboard.

8.9 Overload and short-circuit protection

8.9.1 Feeder cables

For each distribution circuit, a circuit breaker or switch-fuse combination with a pole for each conductor should be provided, except for three-phase grounded systems where the grounded conductor need not be opened.

All feeder cables that can be energized from either end shall have overload and short-circuit protection for the cables at each end.

8.9.2 Control circuits

All control circuits, except those listed in the following paragraph, should be protected by fuses or circuit breakers, one in each line, located as close as possible to the source of power.

Fuses or circuit breakers should not be installed in any circuit in which the opening of the fuse may introduce an operating hazard, such as the following:

a) Electric propulsion control circuits
b) Circuit breaker tripping control circuits
c) Supply circuits for voltage regulators, static exciters, and governors
d) Supply circuits for reverse power relays

NOTE—On electric propulsion installations having very complex control circuits and a large quantity of grouped wiring, consideration may be given to the use of protective fuses. The capacity of the fuses should be not less than 500% of the normal current of the circuits protected so that they will function only on fault currents. Fuses should have blown fuse indicators.

8.9.3 Potential (voltage) circuits

Fuses or circuit breakers should protect conductors for potential (voltage) transformer circuits to instruments, pilot lamps, and ground detector lamps. Potential (voltage) transformers should be protected from short circuits by fuses in the primary, except where the opening of the fuse would introduce an operating hazard, e.g., sensing circuits for voltage regulators.

If instruments are connected to the secondaries of potential (voltage) transformers that are also connected to reverse power relays, the instruments should be fused in a manner that does not affect the reverse power relays in the event of a fuse opening.

Copyright © 2002 IEEE. All rights reserved.
Copyright The Institute of Electrical and Electronics Engineers, Inc.
Provided by IHS under license with IEEE
No reproduction or networking permitted without license from IHS
Not for Resale

Potential (voltage) transformers shall be protected with current limiting primary fuses and secondary fuses in each ungrounded phase. For both low- and medium-voltage systems, the primary fuse size should be no greater than 6 A. The minimum primary fuse size on medium voltage systems shall be 1 A.

Steering Gear. For feeders to steering gear, see 32.5.

8.9.4 Shore power

The shore power feeder should have a circuit breaker with a pole for each ungrounded conductor installed in the switchboard for connecting power from the shore connection panel to the ship service distribution bus.

An indicating light should be illuminated when power is available from shore, and one of the switchboard voltmeters should have selector switch capability to read shore power voltage.

Mechanical or electrical interlocking of the shore power circuit breaker with the generator circuit breakers should be installed unless load transfer paralleling capability is provided.

8.9.5 Grounding

The switchboard ground bus and framework shall be solidly grounded by positive means to the hull or common ground reference. Metal cases of instruments, relays, or other devices and secondary winding of current and voltage transformers shall be grounded to the switchboard's equipment ground bus in accordance with the ANSI and IEC standards for switchboards.

8.10 Switchboard phase and ground bus

Bus bars and connections should be copper and braced to withstand vibration and the maximum mechanical forces imposed by inrush current and all available system short-circuit currents. All bus supports and bus sleeves shall be high dielectric, nonhygroscopic, track resistant, and high strength.

All bus-bar connection points should be silver- or tin-plated. Plating should not peel off under normal operating conditions.

Bus-bar current-carrying capacity should be determined on the basis of generator and feeder full-load currents. For a single generator, the generator bus should have a current capacity equal to the full load rating of the generator plus any overload rating in excess of 30 min duration.

For multiple generator installations, the bus shall be sized to carry the maximum current that can be imposed on it as determined by load flow analysis, including any overload rating in excess of 30 min duration.

When the main source of electrical power is necessary for propulsion of the ship, and the aggregate generating capacity connected to a generator switchboard exceeds 3000 kW, the switchboard bus should be divided into at least two sections. The connections of the generators and any other duplicated distribution services should be divided equally between the bus sections as far as is practicable. The bus sectioning device may be an automatic or nonautomatic circuit breaker, disconnect switch, or other suitable device.

For distribution sections of generator switchboards and distribution switchboards (without generation), the buses shall be sized to carry the maximum continuous load as determined by a load flow analysis plus the overload rating of the largest load and all identified future loads.

All bus bars should be accurately formed, and all holes should be made in a manner that will permit bus bars and connections to be fitted into place without being forced.

Copyright © 2002 IEEE. All rights reserved.

Copyright The Institute of Electrical and Electronics Engineers, Inc.
Provided by IHS under license with IEEE
No reproduction or networking permitted without license from IHS Not for Resale

Bus bars, connection bars, and wiring on the back of the switchboard should be arranged so that maximum accessibility is provided for cable connections. Consideration should also be given to the arrangement of cables so they may be connected to the switchboard in an orderly manner.

8.11 Terminations

Cable terminations are required when connecting insulated shielded and nonshielded power cables to other conductors such as a busbar. When a shielded power cable is ended or terminated, and the outer shield is stopped on the cable insulation, there is a very high concentration of stress at this point. These terminations must contain a method of controlling this high stress (stress cone or stress grading material), an outer non-tracking surface, and a means of providing an environmental seal to prevent moisture ingress. Many different types of terminations are available, such as premolded rubber, heat shrink, cold shrink, and tape. It is recommended that whichever method of terminating is chosen, that it meet the requirements of IEEE Std 48-1996.

For nonshielded power cable, environmental sealing of the connector to the jacket is advantageous to keep out water, and an outer insulating nontracking covering will minimize the possibility of a failure due to surface discharge.

These general guidelines are offered for terminating cables. However, because of the variety of cables and methods of terminating, they are not intended as a detailed set of instructions. Most manufacturers have instructions for specific cable constructions and the type of termination being used, and these instructions are to be followed.

For more details on terminations, refer to IEEE Std 576-2001.

All bolted connections should be fitted with efficient locking devices, such as Belleville-type washers, to maintain contact force and to prevent loosening caused by vibration. Bolts for bus-bar joints should be tightened to the manufacturer's recommended torque values. These values shall be indicated on a nameplate or label in the cable compartment in close proximity to the bolted connection. This includes all main bus connections as well as cable terminations on bus bars.

8.12 Wire and conductor terminal lugs

Wire and cable connections for power, control, and instrumentation within the switchboard should be connected to phase buses, ground buses, devices, or terminal blocks by means of compression/crimp-type terminal lugs. These connections shall be in accordance with UL 486A-1991 or equivalent. Computer, communication, and electronic wire and cable shall be terminated using connectors approved for the use. All bus terminals and terminal blocks for external circuits should be located where they are accessible for cable connection. Mechanical lugs may be used for field power cable terminations.

It is recommended that ring-tongue compression lugs be used for all current transformer wires.

No more than two conductors should be connected to one terminal point. Only one wire is allowed per terminal lug.

All wires within switchboards shall be individually identified at each end with permanent markers, complete with a unique number assignment.

Copyright © 2002 IEEE. All rights reserved.
Copyright The Institute of Electrical and Electronics Engineers, Inc.
Provided by IHS under license with IEEE
No reproduction or networking permitted without license from IHS
Not for Resale

8.13 Nameplates

Each switchboard should be fitted with a nameplate stating that it has been constructed for a marine application and should provide the voltage and ampere rating of the main bus, the manufacturer's name, and the date of manufacture.

Nameplates of nonabsorbent and corrosion-resistant material should be provided for each piece of apparatus to clearly indicate its service. Stainless steel should be considered for this application.

Nameplates for generator, bus-tie, feeder, and branch circuit breakers should include the circuit number and designation, and the rating of the circuit breaker trip elements, or fuse sizes, required for the circuit.

8.14 Switchboard testing

8.14.1 Factory tests

Prior to delivery, tests should be performed to ensure that the switchboard is in accordance with these recommendations and operates at its specified rating. Tests should be in accordance with the standards referenced in 8.3 and 8.4.

8.14.2 Shipboard tests

Dielectric withstand tests are to be made on switchboards after installation in the ship. The assembly should be tested in accordance with the standards referenced in 8.3 and 8.4.

After installation is complete, the switchboard and associated control equipment should be subjected to a complete functional test of all control circuits.

9. Control systems

9.1 General

This clause presents a guide for the design and installation of electrical and electronic equipment intended for automatic or centralized control of machinery in ships. This clause deals with electrical, electronic, and programmable equipment and systems for control, monitoring, alarm, and protection on board vessels. It includes alarm and monitoring systems, semiautomatic, fully automatic, and autonomous (unattended) systems, including

a) Propulsion plants and associated systems including lube oil and fuel systems
b) Boilers (oil, gas, or flue gas—main or auxiliary)
c) Incinerators
d) Steam or combustion turbines
e) Liquid and dry cargo handling and storage systems (including liquefied gases)
f) Bilge and ballast systems
g) Inert gas systems
h) Refrigeration systems
i) Electric power generating plants and distribution equipment and machinery
j) Hotel auxiliary systems
k) Damage and fire control alarm and monitoring systems
l) Navigating bridge control systems

Copyright © 2002 IEEE. All rights reserved.

Copyright The Institute of Electrical and Electronics Engineers, Inc.
Provided by IHS under license with IEEE
No reproduction or networking permitted without license from IHS
Not for Resale

NOTE—Navigating bridge systems are included for those circumstances when machinery control is included in the integrated navigating bridge system. These recommendations address the remote machinery control, alarm, and monitoring aspects only. The navigation system recommendations are in Clause 31.

9.2 Documentation

Documentation for automatic control systems should be provided and should be maintained on board the vessel. This documentation should include plans and specifications, as well as technical manuals.

The plans and specifications should provide machinery arrangement showing location of controls in relation to the controlled units, arrangements, and details of consoles, including all support systems, and plans for all safety-related support systems, including fire detection and protection systems.

Technical manuals should be provided for the controls and should contain, as a minimum, the following information:

a) General overall system functional description
b) Operating instructions
c) Test procedures to evaluate the operation and safety features of the complete system
d) Trouble identification charts
e) Maintenance and special repair procedures
f) Illustrated parts lists and descriptions

The operating instructions for the equipment should include sections providing examples and suggested use of the apparatus to maximize efficiency. The information should include types of conditions that can be encountered and typical responses to those conditions. Normal routine care and testing of the equipment should be discussed. Immediate responses to fault conditions of equipment, including the monitoring or control system itself, should be emphasized.

The technical instructions for the equipment should provide complete technical information on the system and the individual equipment items that make up the system. Information should be provided in a manner and in sufficient detail to allow a skilled technician to troubleshoot, identify the fault, and undertake the repair. Detailed testing and calibration procedures for the equipment should be provided and should include recommended test equipment. The documentation should include information on the various interfaces between the specific items of equipment.

Other documentation that should be provided includes the following:

a) Overall description and specification of the system, software, and equipment
b) Block diagrams for the computer hardware showing interfaces among workstations, local controllers, input/output data acquisition units, communication controllers, communication buses, and so on
c) Logic flow or ladder diagrams
d) Description of the alarm system, including how alarms are displayed, acknowledged, and assessed (if possible)
e) Description of system backup units and redundancy features
f) Description of the communication protocol(s), including estimated data transmission delays
g) Description of the system security protocol to prevent unauthorized changes to programs
h) Description of the system with regard to independence of the control/alarm/display systems, safety systems, and emergency shutdown systems
i) Description of the priority handling of system tasks
j) Description of uninterruptible power supply, its capacity, and the system’s estimated power consumption requirements
k) Equipment ratings and environmental parameters

Copyright © 2002 IEEE. All rights reserved.
Copyright The Institute of Electrical and Electronics Engineers, Inc.
Provided by IHS under license with IEEE
No reproduction or networking permitted without license from IHS Not for Resale

l) Installation methods
m) System alarm and sequencing matrix
n) System failure modes and effect analysis, or similar analysis

9.3 Control system design—general

When an automatic machinery control system is provided, the control and monitoring system should be designed and installed to ensure safe and effective operation, to at least the same level as could be obtained by skilled watch-keeping personnel. The system as installed should be capable of meeting all load and operational demands under steady state and maneuvering conditions without the need for manual adjustment or manipulation. Therefore, the system design should ensure the following:

— Unsafe effects of failure of automatic systems or remote control systems are minimized by design, and failures are limited to failsafe states.
— Prompt alerting of an appropriate crew member, either directly or by reliable instrumentation and alarms, of machinery failure, flooding, or fire.
— An alternative means to operate the vessel safely and to counteract the effects of the machinery failure, fire, or flooding.
— Indication at an attended control station of the status of operation of the equipment controlled from that location.

Computer-based or computer-assisted systems are to be designed to ensure operational capability upon loss of any processing component of the system that may cause an unsafe operating condition of the plant. Unless backup, hardwired safety systems, and emergency shutdown systems are fitted, all of a computer-based system's equipment or peripherals should be provided in duplicate and should automatically transfer duty functions to the corresponding standby system/equipment upon failure of an on-line equipment or system. Such action should be alarmed at the remote station. Additionally, particular attention should be paid to the following criteria in the design and installation of automatic or centralized control systems:

a) Maintainability: The capability of keeping the control system in the designed state of operation.
b) Availability of spare components: The capability of the manufacturer to readily supply components to avoid delaying the operation of the vessel.
c) Standardization: The types of components used. Items that are readily available should be utilized wherever possible.
d) Operational capability: The capability of keeping display and control device movements as simple as possible. Direction of control device movements should be parallel to the axis of the display they control.
e) Reliability: The probability that a system will function within its design limits for a specified period of time.
f) Accessibility: The ability to maintain components and subsystems without removal of, or interference with, other components and subsystems.

The control system should be designed to incorporate hierarchical degrees of automation, starting from local manual control to full unattended automatic operation. The system should be designed such that loss of automatic features automatically shifts the level of control to the next lower step. The design of the system should be such that the transfer to the next lower step does not change the status of the plant or the commanded order from that of the higher level. Additionally, the system should incorporate a feature that allows the operator to set the level of control desired from the main control station.

9.4 Control system equipment location

Ship motion and anticipated structural vibrations are to be considered when selecting the locations of main and secondary control stations. Control spaces should be well ventilated, and they should not

Copyright © 2002 IEEE. All rights reserved.

Copyright The Institute of Electrical and Electronics Engineers, Inc.
Provided by IHS under license with IEEE
No reproduction or networking permitted without license from IHS Not for Resale

require air-conditioning to maintain continuous operation of the control equipment within the prescribed temperature limits, as described in 9.20. The routing of water, hydraulic, steam, waste, and other fluid systems piping, electrical power distribution cables, and other systems that could have a negative effect on the operation of the control system if breached or ruptured, should be avoided in the vicinity of the control consoles. If such routing is necessary, care should be taken to protect the consoles from any possible leakage.

In the case of electrical equipment operating at or over 440 Vac, care should be taken to avoid installation of switching equipment in or around the control consoles unless proper shielding from electromagnetic field pulses and power supply spiking is provided.

When an enclosed main control space is located within the machinery spaces, it should have two means of access/egress located as remote from each other as practicable. Windows, if provided, should be shatter-resistant.

The arrangement of control consoles should be such that the operator can safely and efficiently communicate with and control the equipment under all conditions. The indicators, meters, displays, control switches, and levers should be grouped so that trends, abnormal conditions, the indicators of possible trouble, and devices for corrective action are in a localized area. If light-emitting diodes (LEDs) are used for any display, indicator, or meters and exposure to sun rays is possible, means should be provided to block sun rays and enhance direct sunlight readability.

9.5 Machinery control

9.5.1 General

The centralized control system should support real-time monitoring and control of ship propulsion, electrical, auxiliary, and steering functions.

When provided for essential machinery functions, standby machines should incorporate automatic changeover features. The changeover function should be alarmed. Vital control, safety, and alarm systems should automatically transfer power sources to backup systems upon failure of the operating power source. The system should be designed to ensure the changeover operation does not further degrade the plant condition by inadvertently compounding the situation.

Effective means should be provided to allow propulsion units to be operated under all sailing conditions, including maneuvering. The speed, direction of thrust and, if applicable, the pitch of the propeller, should be fully controllable from the navigating bridge. This includes all thrust conditions, from that associated with maximum controllable open-water astern speed to that associated with the maximum controllable ahead speed.

Control functions from a console may be designed for either remote manual or automatic control. Vital systems that are automatically or remotely controlled should be provided with the following:

a) An effective primary control system.
b) A manual alternate control system. A method should exist that provides for alternative positive control of the vital equipment.
c) A safety control system. Methodologies should be incorporated into the control system either in hardware or software that preclude the unsafe operation of the equipment. Unsafe operation is considered to be operation that will cause severe and permanent damage of the equipment, or risk to operating personnel.
d) Instrumentation to monitor system parameters necessary for the safe and effective operation of the system. The instrumentation installed should be sufficient to provide a skilled worker with an

--`,,`-`-`,,`,,`,`,,`---
Copyright © 2002 IEEE. All rights reserved.
Copyright The Institute of Electrical and Electronics Engineers, Inc.
Provided by IHS under license with IEEE
No reproduction or networking permitted without license from IHS
Not for Resale

adequate ability to assess the status, operational performance, and health of the equipment under control. Human factors and ergonometric considerations should be included in the instrumentation design.

e) An alarm system. A method should be provided to alert the operator to abnormal and dangerous operating conditions.

Provision should be made for independent manual control in the event of a loss of an element of, or the entire centralized control system. The provision should include methods and means of overriding the automatic controls and interlocks. The instrumentation and control provided should be capable of supporting the manual operation for indefinite periods of time.

9.5.2 Control hierarchy

For ships with more than one control station, a decreasing authority should be assigned according to the following control station locations:

a) Local controls at the controlled equipment
b) Control station(s), in the machinery spaces, closest to the controlled equipment [local control station(s)]
c) Remote control station(s) outside of machinery spaces
d) Navigating bridge (or bridgewing) control station

The control station of higher authority should be designed to include a supervisory means for transferring control from a station of lower authority at all times, and to block any unauthorized request from any station of lower authority. A station of higher authority must be capable of overriding and operating independently of all stations of lower authority. The overriding action when executed should be alarmed at the remote location affected. Transfer of control from one station to another, except for the specific case of override by a station of higher authority, is to be possible only with acknowledgment by the receiving station.

The control function at a control station of higher authority should not depend on the proper functioning of the control station of the lower authority. The control functions from only one station should, except for emergency control actions, initiate a command signal to controlled equipment. Transfer of control between stations should be accomplished smoothly and control of the controlled equipment should be maintained during the transfer. Failure of a control function at a station of lower authority should automatically and smoothly transfer the control to the station of the next higher authority. This transfer should generate an alarm at both stations. Appropriate indications with discriminatory intelligence should be provided at each station, except locally at the controlled equipment, to identify the station in control and any loss of control.

9.5.3 Control, start, stop, and shutdown conditions

The control system should include a means for emergency stopping the propulsion system from the navigation bridge. This feature should be independent of the navigation bridge control system.

For remote starting of the propulsion machinery, the control system should include interlocks that prevent the remote starting of propulsion machinery under conditions that may be hazardous to the machinery or operating personnel, such as when machinery is being maintained or inspected.

Automatic shutdown of machinery should be alarmed at all control stations. Restoration of normal operating conditions should be possible only after a manual reset.

Loss of control for any reason, including loss of power, logic failure, or power conditioning failure, should be alarmed at all stations. Upon failure of the control system, the system should be designed to continue to operate the plant in the condition last received, until local control is established.

Copyright © 2002 IEEE. All rights reserved.

Copyright The Institute of Electrical and Electronics Engineers, Inc.
Provided by IHS under license with IEEE
No reproduction or networking permitted without license from IHS Not for Resale

9.6 System design characteristics

Efforts should be taken to minimize the probability of a failure of any one component or device in the control circuit, causing unsafe operation of the machinery. There should be no single points of failure that will disable the control system. Where multiple auxiliaries such as normal and standby are installed for vital services, any single failure should be limited in effect to only one of the auxiliaries, and such failures should not render any reserve automatic or manual control, or both, inoperative.

All electric and electronic devices and components should be suitable for use in a marine environment, resistant to corrosion, treated for resistance to fungus growth, not affected by shipboard vibration or shock loading, and capable of providing their intended function at typical environmental temperature and humidity levels. All control equipment should be designed to perform satisfactorily without adverse susceptibility to electromagnetic fields, power switching spikes, or other electromagnetic noise that might typically be encountered in the operating environment, or induced on interconnecting cables (see 9.20).

9.7 Control system power supply

Feeders supplying power to the control console should be provided with overload and short-circuit protection. Where circuits are protected by fuses, control system protection should be subdivided and arranged so that failure of one set of fuses will not cause maloperation or failure of other circuits or systems. Isolation of faults should be readily accomplished.

Power for monitoring, alarms, and vital controls should be supplied from an emergency source upon failure of the main power supply. Power conversion equipment, if required by the design, should be of the solid-state type. Common power conversion devices should be supplied in duplicate, arranged to operate in parallel, with either capable of supplying the full load of all units powered by the system they serve.

Designs in which the control system is isolated into separate sections controlling major equipment and systems that are operated independently of each other may use separate power conversion devices for each section, with one spare, readily interchangeable with any unit.

Individual protective devices should be provided in the input and output of each power conversion device.

9.8 Continuity of power

The control system should be designed to include an uninterruptible power supply (UPS) that has sufficient capacity to maintain power to the control system for a period sufficient to bring the emergency power generator on line, or if necessary, to safely shut down the equipment. The quality and operation of the UPS supply should be such that the control's equipment experiences no disturbance or interruption in power. Nominal capacity should be for a period of not less than 15 min at full rated load with a voltage degradation not more than 10% of rated level.

9.9 Communication systems

Communications systems for control should include, as a minimum, voice, data, and emergency backup systems.

Voice systems should provide direct communication between control stations and controlled equipment on a priority link. When the voice communications systems depend on the ship's electrical system, a backup system should be provided that is independent of the electrical system, and that is capable of operating reliably for an indefinite period of time. The voice system should be independent of all other communication systems used for machinery/propulsion control.

Copyright © 2002 IEEE. All rights reserved.
Copyright The Institute of Electrical and Electronics Engineers, Inc.
Provided by IHS under license with IEEE
No reproduction or networking permitted without license from IHS
Not for Resale

Data communications between control stations and controlled equipment should be designed to incorporate industry standard protocol and interfaces. The system should include a built-in redundancy for the transmission of data. The data system should be separate from all other communication systems. The system should be designed to be relatively immune to negative effects induced by the operational environment. Within the data communication system, the fire alarm communication system should be a separate standalone system, not dependent on any other subsystem for its operation.

Digital systems and systems employing data "highways" or "buses" or local area networks (LANs) should be designed with full consideration of system bandwidth, redundancy, data senescence, and fault tolerance. In general, bandwidth should be sized to allow 50% growth upon completion of the design. Redundancy should include, as a minimum, two levels, with no single points of failure. Data senescence should be such that critical controls cannot be placed into oscillation, or degrade the performance of the control system under any fully loaded condition (when all systems capable of using the data highway are using it at their individual worst-case data transmission rates). Fault tolerance should be such that minor faults do not render the communication system wholly inoperative. The design should be such that the failure is limited in its impact to the immediate system and, at worst, results in a proportionately degraded system. In addition, when automatic or remote control and monitoring for specific machinery is to operate utilizing such data highways, the following items should be considered:

a) The network topology should be configured so that in the event of a failure between nodes or a failure of a node, the integrity of the system as a whole is maintained.
b) In the event of a failure of the network controller, the network should be arranged to automatically switch to a standby controller. The failure should be alarmed at the associated remote control station.
c) Safeguards should be implemented to prevent overloading of the network data transmission rates. Such overloading should be alarmed at the associated remote control station whenever such a condition is approached.
d) The communication data highway should be provided in duplicate and should be arranged such that failure of the online highway automatically causes the standby highway to be switched online. The standby highway is not to be used to reduce the traffic in the online highway.

The control system should be equipped with various separate emergency backup communication systems that will allow the continued operation of the vessel in the event of a catastrophic failure of the normal communication systems. These communications systems might typically be hardwired links to a few limited critical systems. Backup communication systems might include

— For voice communication systems: Sound-powered, or battery-powered hard-wired or hull-transmitted communication systems between the machinery control stations and the machinery being controlled.
— For data communication systems: Separate hard-wired or alternative data highway or hull-transmitted data communications circuits among the navigating bridge, machinery control stations, and the machinery being controlled. These circuits should provide abbreviate plant status monitoring.

9.10 Alarms

Alarm devices should be provided that automatically sound and visually indicate the loss of power to the control system. Provision should be made for silencing audible alarms. The system should indicate any fault requiring attention and should contain the following features:

a) Audible and visual alarms in the machinery control room or at the propulsion machinery control position, which indicate each separate alarm function at a central position.
b) Alarm indication circuits for the engineers' public rooms and selectable alarm indications to each engineer's stateroom.

Copyright © 2002 IEEE. All rights reserved.

Copyright The Institute of Electrical and Electronics Engineers, Inc.
Provided by IHS under license with IEEE
No reproduction or networking permitted without license from IHS
Not for Resale

c) Supervisory alarm activation if the alarm system malfunctions.
d) Supervisory alarm activation in an attended location if the alarm has not been acknowledged in a limited time (not exceeding 5 min).
e) A continuously energized system, with automatic transfer to standby power upon failure of normal power.
f) Capability to indicate more than one alarm condition simultaneously, while retaining the first fault, and providing descriptive information on the nature of each fault.
g) Prevention of nuisance alarm activation due to ship's dynamic motion.
h) Ability to acknowledge an alarm condition without preventing the alarm indication of other abnormal conditions.
i) Ability to override an audible alarm condition from reoccurring continuously if the alarm condition could not be rectified immediately.

Vital alarms should be readily distinguishable from nonvital alarms, both audibly and visually.

Alarms should be of the self-monitoring type (an open circuit will cause an alarm condition). With the exception of equipment running lights, provisions should be made for testing audible and visual alarms.

9.11 Control cabling

Cables for circuits susceptible to interference should be shielded or isolated to minimize spurious signals from outside sources. Wiring and electrical components within consoles should be arranged for maximum accessibility and for protection from steam, water, oil, and so on.

9.12 Control power distribution

Equipment, such as rheostats and voltage regulators operating at 115 V or greater mounted in control consoles, should have barriers to separate live parts from equipment operating at lower voltage levels.

Input line disconnect switches or circuit breakers should be provided for all console power sources. They should be in a readily accessible location in or adjacent to the console.

Grounding should be in accordance with 5.9.6.

9.13 Hazardous location considerations

Intrinsically safe systems or explosionproof equipment should be installed where hazardous conditions may be present (see Clause 33).

9.14 Control system testing

Control systems should be tested in accordance with the specific requirements of the cognizant regulatory agency and classification society.

Testing should be accomplished in a hierarchical structure beginning with component inspection and qualification, proceeding to subassembly performance testing and qualification, and ending with installed system performance testing and qualification. Manufacturers should provide mechanical, electrical, and electronic components that have been inspected and performance-proven at the component or material level, subassembly, and system levels. These tests should be structured such that successful completion of the testing provides reasonable assurance of the system performance in the expected marine environment.

Copyright © 2002 IEEE. All rights reserved.
Copyright The Institute of Electrical and Electronics Engineers, Inc.
Provided by IHS under license with IEEE
No reproduction or networking permitted without license from IHS
Not for Resale

In addition to the requirements for testing of control systems during construction and assembly and during shipboard installation trials, control systems should incorporate features into the design that provide for routine in-service, built-in testing. Means for testing complex circuits and check points for calibration purposes should be provided. In assessing the requirements for built-in test equipment, it should be assumed that maintenance and repair will normally be carried out by removing faulty line replacement units to a test bench or suitably equipped workshop.

9.15 Maintenance philosophy and design

Equipment and systems should be designed to support a maintenance philosophy that establishes the line replaceable unit (LRU) as a circuit board, power supply, mechanical subassembly, or other self-contained unit or logical subassembly. Electronic or electrical equipment designated as an LRU should include an appropriate indicating device that distinguishes normal operation from a failed condition.

Repair of an LRU should consist of a removal and replacement operation. This operation should be designed to require no more than 120 min to complete from identification of the fault, through removal and replacement of the failed unit, to restoration of its normal operating condition.

A listing of recommended on-board repair parts should be provided with the control system.

9.16 Control system sensors

Sensors should be chosen to be appropriate to the local operating environment and type of service expected. In general, sensors should provide standard type of interfaces and modes of operation. When employed, “intelligent” sensors, or sensors containing embedded microprocessors or other logic circuits, should provide data via a generally accepted interface and protocol scheme. Care should be taken in the system design and selection of sensors to ensure that a failure of the sensor or sensor subsystem fails safe, and does not support propagating damage. For example, a sensor failure on an engine governing system should not cause the engine to overspeed.

9.17 Control system programming

Most industrial high-level control systems utilize a functional block program language based on preprogrammed functional blocks, and such are preferred for automatic and semiautomatic control systems due to their simpler readability and self-explanatory documentation. Systems utilizing embedded or high-level software programming to perform the control function should have such programs designed and implemented with the following considerations:

a) Embedded programs should be utilized. The embedded program should be written in a structured high-level language. Assembly language programming should be used only if code, for timing or space reasons, can be coded in no other way. Each procedure should be documented as follows:
   1) The procedure’s actual calling name from within the program should be listed along with a one-line description statement for the calling name. The statement’s purpose should clearly describe the task associated with the procedure’s name.
   2) There should be a list of input/output parameters, a description statement for each parameter that describes the task associated with the parameter’s name, a statement stating whether the parameter is an input into the procedure or an output of the procedure, and a range of valid values for each parameter that may be passed into or out of the procedure.
   3) There should be a list of calling/called procedures, a description statement for each procedure that describes the task associated with the procedure’s name (this statement should be the same as the one describing the procedure’s calling name), a statement stating whether the procedure

Copyright © 2002 IEEE. All rights reserved.

Copyright The Institute of Electrical and Electronics Engineers, Inc.
Provided by IHS under license with IEEE
No reproduction or networking permitted without license from IHS
Not for Resale

is called from within the routine or is the caller of the routine, and the name of the module in which the calling/called procedure can be found.

4) There should be a synopsis describing the program flow for the procedure. This should be a detailed plain-language narrative of what the code is doing.
5) There should be a revision history for the procedure that includes the data and a description of the change. The description should include the new revision level for the overall program that has resulted from the module modification.

b) The overall program should contain a documentation file. The documentation file should include a list of files and module names within the program, a list of procedures associated with each module, and a list of procedures that each procedure calls (cross-referencing). The documentation file should also include a list of compiler/assembler/linker/locator commands required to convert the associated source code files into the program's operational absolute code. There should be a revision history for the overall program within this file. Included should be the date and a description of the revision change. The description should include the new revision level of the overall program, the name of the modules that were modified, and a description of the modification.

Operating systems, if used, should be limited to standard off-the-shelf products unless a custom operating system is required for special applications.

Software programming required for the operation of the system should be contained in nonvolatile memory within the system. A preferred configuration is a hierarchical structure wherein the master program is maintained on a hard disk or tape, and loaded into the system on electronic programmable read-only memory (EEPROM) for operational use.

For verification, the vendor should develop a test plan that exercises all of the functions, including operation, fault detection and recovery, data acquisition, and data dispersion of the software. This plan will be used to exercise, demonstrate, and verify to the customer, regulatory body personnel, and classification society personnel the proper operation of the equipment.

9.18 Design considerations

Circuits should be easy to adjust and maintain, and they should be designed for maintenance by replacement. Components and circuits should be clearly identified or labeled. Circuit diagrams, in block form, should be prominently displayed in or near the associated cubicle.

Solid-state amplifiers should be provided as necessary to preclude overloading transducers that are used as a common signal source for display, such as loggers and alarms.

Where complex logic circuits are used for sequential startup, or for operating individual plant components, indicators should be provided showing successful completion of the sequence of operation. Where a particular step is not completed in the sequence cycle, indicators should be provided designating the incomplete function or control stopping the sequence at this particular point. Manual override should permit control in the event of the failure of a logic circuit.

Instruments exposed on the operating panels should be recess-mounted with the controls, meters, and so on, as flush as practicable. Miniaturized equipment may be used to limit the size of control consoles.

Thermostatically controlled heaters should be provided for humidity and temperature control during cold ship or idle conditions, and they should be automatically energized from a separate source of power when the main power source is turned off.

--`,,`-`-`,,`,,`,`,,`---
Copyright © 2002 IEEE. All rights reserved.
Copyright The Institute of Electrical and Electronics Engineers, Inc.
Provided by IHS under license with IEEE
No reproduction or networking permitted without license from IHS
Not for Resale

9.19 Instrumentation

Instrumentation and alarms should be at control consoles to provide all information for monitoring and alarming the operation of propulsion, electrical, and emergency systems.

Where readouts are required and are not continuous, there should be a demand readout. Displays should be easily readable and available with minimum effort by a watchstander.

Instrumentation and control system actuators should have a physical differentiation from the alarm indicators. An illuminated pushbutton may be used as an alarm monitor, providing the proper designation is available.

9.20 Environmental conditions

Control components should be designed and type tested for operation at the following conditions. Equipment should be tested according to the environmental procedures as specified in Table 11, and in accordance with the performance procedures in Table 12. This does not modify the equipment ambient temperature conditions specified elsewhere in these recommendations.

Table 11—Environmental tests for control and monitoring equipment

No	Test	Procedure according to	Test parameters	Other information
1	Visual inspection	—	—	a) Conformance to drawings, design data b) Quality of workmanship and construction
2	Dry heat	IEC 60068-2-2: 1974, Environmental testing—Part 2: Tests. Test Bb, Dry heat for non-heat-dissipating specimen with gradual change of temperature	Temperature: 55 °C ± 2 °C Duration: 16 h or Temperature: 70 °C ± 2 °C Duration: 2 h (See Note 1)	a) Equipment operating during conditioning and testing b) Functional test during the last hour of the test temperature c) Functional test after recovery
		IEC 60068-2-2: 1974, Environmental testing—Part 2: Tests. Test Bd, Dry heat for heat-dissipating specimen with gradual change of temperature	Temperature: 70 °C ± 2 °C Duration: 2 h or Temperature: 55 °C ± 2 °C Duration: 16 h (See Note 1)	a) Equipment operating during conditioning and testing with cooling system on, if provided b) Functional test during the last hour at the test temperature c) Functional test after recovery
3	Damp test	IEC 60068-2-30: 1980, Environmental testing—Part 2: Tests. Test Db and guidance: Damp heat, cyclic (12 + 12-hour cycle)	Temperature: 55 °C Humidity: 95% Duration: 2 cycles/ 12 + 12-h cycle	a) Measurement of insulation resistance before test b) Equipment operating during complete 1st cycle, switched off during 2nd cycle except for functional test c) Functional test during the first 2 h of the 1st cycle at the test temperature and during the last 2 h of the 2nd cycle at the test temperature d) Recovery at standard atmosphere conditions e) Insulation resistance measurements and performance test

Copyright © 2002 IEEE. All rights reserved.

Copyright The Institute of Electrical and Electronics Engineers, Inc.
Provided by IHS under license with IEEE
No reproduction or networking permitted without license from IHS
Not for Resale

Table 11—Environmental tests for control and monitoring equipment *(continued)*

No	Test	Procedure according to	Test parameters	Other information
4	Cold	IEC 60068-2-1: 1990, Environmental testing—Part 2: Tests. Test A: Cold (Concerns cold tests on both non-heat-dissipating and heat-dissipating specimens)	Temperature: 5 °C ± 3 °C Duration: 2 h or Temperature: 25 °C ± 3 °C Duration: 2 h (See Note 2)	a) Initial measurement of insulation resistance b) Equipment not operating during conditioning and testing except for functional test d) Functional test during last hour at the test temperature d) Insulation resistance measurement and functional test after recovery
			Temperature: 25 ºC ± 3 ºC Duration: 2 h or Temperature: 5 ºC ± 3 ºC Duration: 2 h (See Note 2)	—
5	Salt mist	IEC 60068-2-52: 1996, Environmental testing—Part 2: Test methods—Test Kb Salt mist, cyclic (sodium, chloride solution)	Four spraying periods with a storage of 7 d after each.	a) Initial measurement of insulation resistance and initial function test d) Equipment not operated during condition e) Functional test on the 7th day of each storage period f) Insulation resistance measurement and op test after recovery (see Note 3)
6	Insulation resistance	—	Rated supply voltage (V): Un > 65 Test voltage (V): 2*Un, min 24 V Minimum insulation resistance: Before MΩ: 10, After MΩ: 1.0 Un > 65: 500 V; 100; 10	a) Insulation resistance is to be carried out before and after; damp heat test, cold test, and salt mist test b) Between all circuits and earth c) On the supply terminals, where appropriate
7	High voltage	—	Rated voltage Un (V): up to 65; 66 to 250; 251 to 500 Test voltage (ac voltage 50 or 60 Hz) (V): up to 65; 66 to 250; 251 to 500	a) Separate circuits are to be tested against each other and all circuits connected with each other tested against earth d) Printed circuits with electronic components may be removed during test c) Period of application; 1 min
8	Electrostatic discharge	IEC 61000-4-2: 1995, Electromagnetic compatibility (EMC)—Part 4: testing and measurement techniques—Section 2: Electrostatic discharge immunity test. Basic EMC publication	Test voltage: 8 kV according to level 3 severity standard	a) To simulate electrostatic discharge as may occur when persons touch b) Test is to be confined to the points and surfaces that can normally be reached by the operator c) The equipment is to operate during testing d) As a result of the test, neither permanent or transient effects nor damage to the equipment are allowed

Copyright © 2002 IEEE. All rights reserved.
Copyright The Institute of Electrical and Electronics Engineers, Inc.
Provided by IHS under license with IEEE
No reproduction or networking permitted without license from IHS
Not for Resale

Table 11—Environmental tests for control and monitoring equipment *(continued)*

No	Test	Procedure according to	Test parameters	Other information
9	Radiated electro-magnetic field	IEC 61000-4-3: 1995, Electromagnetic compatibility (EMC)—Part 4: testing and measurement techniques—Section 3: Radiated, radio-frequency, electromagnetic field immunity test	Frequency range: 30 kHz to 500 MHz Field strength; 10 V/m: a) According to severity level 3 b) Field strength to be adopted according to severity.	a) To simulate electromagnetic fields radiated by different transmitter b) The test is to be confined to the appliance exposed to direct radiation by transmitters at their place of installation c) As a result of the test, neither permanent or transient effects nor damage to the equipment are allowed
		IEC 61000-4-4: 1995, Electromagnetic compatibility (EMC)—Part 4: testing and measurement techniques—Section 4: Electrical fast transient/ burst immunity test. Basic EMC publication	Test voltage: ± 10%: a) 2 kV on power supply b) 1 kV on data and control lines acc. to severity level 3.	a) To simulate interference by electric arcs generated when actuating electrical contacts b) Interference effect occurring on the power supply, as well as at the external wiring of the test specimen c) As a result of the test, neither permanent or transient effects nor damage to the equipment are allowed
10	Conductance	IEC 61000-4-6: 1996, Electromagnetic compatibility (EMC)—Part 4: testing and measurement techniques—Section 6: Immunity to conducted disturbances, induced by radio-frequency fields	Testing signal 1.5 V efficient in the range between 10 kHz and 50 MHz Modulation: 30% Modulation frequency: 1 kHz	To simulate electromagnetic fields coupled as high frequency into the test specimen via the connecting lines
	Interference	IEC 61000-4-5: 1995, Electromagnetic compatibility (EMC)—Part 4: testing and measurement techniques—Section 5: Surge immunity test	Test voltage: 1.0-kV differential mode; 2.0-kV common mode Rise time: 1.2 ms Surge time/50% value/50 μ s acc. to severity level 3.	a) To simulate interference generated, for instance, by switching on or off high-power inductive consumers b) The test is to be carried out at the power supply
11	Vibration	IEC 60068-2-6: 1995, Environmental testing—Part 2: Tests—Test Fc: Vibration (sinusoidal)	2 to 13.2 Hz—amplitude 1.0 mm + or – 0.152 13.2 Hz to 50 Hz—amplitude ± 0.076 mm. + 0.000 – 0.025 For severe vibration conditions such as equipment mounted on diesel engines, air compressors, etc., higher frequency and acceleration values will be considered.	a) Duration in case of no resonance condition 90 min at 30 Hz b) Duration at each resonance frequency at which Q > 2 is recorded, 90 min c) During the vibration test, operational conditions are to be demonstrated d) Tests are to be carried out in 3 perpendicular planes e) It is recommended, as guidance, that Q does not exceed 5
12	Inclination	—	Static: a) Athwartships: 22.5° (see Note 4) b) Fore and aft: 10° Dynamic: a) Athwartships: 22.5° (see Note 4) b) Fore and aft: 10° Duration: 10 s	a) This test is to be carried out immediately after the vibration test b) For static conditions, the test is to be carried out for a period of sufficient duration to determine the satisfactory operation of the equipment

NOTES
1—Dry heat at 70 ºC is to be carried out for equipment located in an non-air-conditioned space.
2—For equipment installed in non-weather-protected locations or cold locations, test is to be carried out at –25 ºC.
3—Salt mist test is to be carried out for equipment installed in weather-exposed areas.
4—For athwartships position, the angle of inclination is to be increased to 45° if switches, levers, or similar are installed on the equipment.

Copyright © 2002 IEEE. All rights reserved.

Copyright The Institute of Electrical and Electronics Engineers, Inc.
Provided by IHS under license with IEEE
No reproduction or networking permitted without license from IHS
Not for Resale

Table 12—Performance tests for control and monitoring equipment

No	Test	Procedure according to	Test parameters	Other information
1	Visual inspection	—	—	a) Conformance to drawings, design data b) Quality of workmanship and construction
2	Functional test	The equipment specification	Standard atmosphere conditions: a) Temperature: 25 ºC – 10 ºC b) Relative humidity: 60% ± 30% c) Air pressure: 96 kPa ± 10 kPa	a) Confirmation that operation is in accordance with the requirements specified for particular automatic systems or equipment b) Checking of self-monitoring features c) Checking of specified protection against an access to the memory and effects of unerroneous use of control elements in the case of computer systems
3	Power supply failure	—	a) Three interruptions during 5 min b) Switching-off time 30 s each case	Verification of the specified action of the equipment on loss and restoration of supply in accordance with the system design
4	Power supply (electric)	—	Combination / Voltage variation permanent (%) / Frequency variation permanent (%) 1 / +10 / +5 2 / +10 / –5 3 / –10 / –5 4 / –10 / +5 Combination / Voltage transient 1.5 s (%) / Frequency transient 5 s (%) 5 / +20 / +10 6 / –20 / –10 Electric battery supply: a) +30% to –25% for equipment connected to battery during charging b) +20% to –35% for equipment not connected to the battery during charging	—
	Power supply (pneumatic and hydraulic)	—	Pressure: ± 20% Duration: 15 min	—

9.20.1 Ambient temperature and humidity ranges

a) Open weather decks and open bridges:
   1) Temperature range: –25 °C to + 55 °C
b) Machinery spaces:
   1) Temperature range: 0 °C to +55 °C
   2) Relative humidity: 10 to 95%

Copyright © 2002 IEEE. All rights reserved.
Copyright The Institute of Electrical and Electronics Engineers, Inc.
Provided by IHS under license with IEEE
No reproduction or networking permitted without license from IHS
Not for Resale

c) Enclosed areas other than machinery spaces:
   1) Temperature range: –25°C to +55 °C
   2) Relative humidity: 10 to 95%
d) Storage and transport conditions:
   1) Temperature range: 25 °C to +55 °C
e) Console and stand-alone equipment:
   1) Interior temperatures: 0 °C to +55 °C

NOTE——Equipment should be suitable for the atmospheric conditions encountered, such as salt air, moisture, and oil vapor.

9.21 Control system voltage and frequency

Equipment should be designed for satisfactory operation with a voltage variation of ± 10% and possible simultaneous frequency variation of ± 5.0%.

9.22 Electromagnetic frequency

The generation of electromagnetic fields by the installed equipment should be minimized. However, in recognition that shipboard control equipment will operate in an electromagnetic environment, the equipment should be designed to operate properly when exposed to electromagnetic radiation. The levels of electromagnetic radiation will vary by application and location, and equipment should be designed accordingly.

9.23 Equipment enclosures

The types of protective enclosures used for control apparatus should be governed by the location, unless otherwise specified in these recommendations.

9.24 Control console design—general

All control stations should be placed well inboard from the ship side, in locations where any anticipated structural vibration would be expected to be at a minimum. Control stations should be well ventilated. Control consoles should be self-supporting with the sides and backs suitable protected. Drip covers should be provided over consoles that may be subject to damage by leaks or falling objects. Where antishock or antivibration mounts are used, adequate clearance should be provided between tray and cubicle or rack, allowing full freedom of travel. Cascaded systems of shock or vibration mounts should be avoided. All enclosures should be rodent-proof with openings covered with wire mesh, approximately 6.4 mm by 6.4 mm. Grab rails should be provided along the front of consoles.

Design of chassis and cubicles should be mechanically simple and arranged to avoid the need for special tools in dismantling. Nut and bolt connections should have locking devices. In general, threads should not be tapped directly into molded or synthetic resin board or similar material. The use of blind holes, plain or tapped, should be avoided.

Removable assemblies should be such that one person can handle and maneuver them easily and safely. Check points or connecting points should be accessible without the necessity for complete disassembly of equipment. Components requiring maintenance should be arranged to be clear of or shielded from voltages exceeding 42 V and temperatures exceeding 60 °C. Electrical control equipment should not be installed in the same panels as equipment employing a hydraulic medium. Consoles should be constructed to facilitate retrofitting and ease of movement through standard shipboard doors and accesses.

Copyright © 2002 IEEE. All rights reserved.

Copyright The Institute of Electrical and Electronics Engineers, Inc.
Provided by IHS under license with IEEE
No reproduction or networking permitted without license from IHS
Not for Resale

9.25 Control console components

Console components should be suitable for use in the marine environment.

Relays of the hermetically sealed type should be used for all circumstances. However, electromagnetic relays of the unsealed type may be used if they are fitted with dust covers. All relays should be arranged to be readily accessible for maintenance. Unsealed relay contacts should not be used for currents less than 2 mA.

Pushbuttons and similar devices should be provided with oiltight enclosures if installed where moisture, oil vapor, or conductive dust may be present. Control pushbuttons for remote-operated valves should have valve position indicators on the control console. Position indicators may be combined with the pushbuttons on the mimic diagrams. Valves that are installed in positions liable to flooding should be capable of operating when submerged. If momentary pushbuttons are used, separate indicators for the state of the pushbutton as well as the status of the controlled device should be provided. Status of the controlled device should be shown for all possible states.

Indicator lights should be fitted with two or more lamps in parallel and enclosed in a diffusing shade, or otherwise shielded to avoid excessive brightness. There should be at least 6.4-mm clearance through air, and 6.4-mm creepage clearance between the inside of the enclosure and live parts for 115 V. For systems of 24 V and less, clearances may be reduced to 3.2 mm. Indicator lights should be of rugged construction and not be affected by vibration.

Printed circuit boards should mate with “floating contacts,” enabling the boards to remain fully connected under adverse conditions. Where plug-and-socket connections are used, the plugs and sockets should not carry any mechanical load even when withdrawing or replacing a unit. Guide pins or rails should be provided.

Lugs and connectors should be of the solderless type. These devices should provide adequate contact area and conductive finish, low-voltage drop, satisfactory mechanical strength capable of resisting pullout, and the capability to resist vibration. Where lugs are located such that misalignment may result in short-circuiting, they should have two holes or be otherwise secured against turning. Connectors should be accessible for cable connections in all units.

Terminal boards for connecting ship cable should have terminal screws not smaller than UNC size 6-32. Terminals should be protected against accidental contact or mechanical damage. Solderless terminal connectors should include a locking device to prevent loosening due to vibration.

9.26 Meters and gauges

Instruments for indicating the plant conditions should be provided and mounted on the control consoles, convenient to the control. Meters and gauges mounted on consoles should be plainly labeled and provided with a distinguishing mark indicating normal maximum load conditions, or ranges as applicable. Scale values should have a logical sequence of operation (e.g., increase from left to right or from bottom to top). Meters and gauges should be located where they can easily be seen.

9.27 Control devices

Control levers or handles should be easy to grasp and manipulate and protected against inadvertent operation. Control movements should be in a logical direction; for example, clockwise movements produce an increase, and counterclockwise movements produce a decrease. Also, the forward movements of a lever should cause an increase or a forward motion, the backward motion a decrease or an astern motion, or a similar logical sequence. Controls should be readily identifiable.

Copyright © 2002 IEEE. All rights reserved.
Copyright The Institute of Electrical and Electronics Engineers, Inc.
Provided by IHS under license with IEEE
No reproduction or networking permitted without license from IHS
Not for Resale

All reply pointers should operate in synchronism. Where transmitters are mechanically interlocked to effect synchronous operation, methods of mechanical interlocking should be such that failure of the mechanical interlock will not interrupt or disable the transmitter.

The most important and frequently used controls should have the most favorable position with respect to ease of reaching and right-hand operation, especially rotary controls and those requiring fine settings.

Controls should be selected and distributed so that none of the operator's limbs will be overburdened. Detent controls should be selected to divide adjustments into discrete steps whenever feasible.

9.28 Ergonomics (human factors)

Controls and associated displays should be grouped together so that the effect of control adjustment is readily visible. The relationship of a control to its associated display and the display to the control should be immediately apparent and unambiguous to the operator. Controls should be located adjacent to (normally under or to the right of) their associated displays and positioned so that neither the control nor the hand normally used for setting the control will obscure the display. The guidelines provided in ASTM F1166-95a, as related to controls, displays, audio indicators, labeling, and environment and accessibility issues, should be followed where practicable, unless other guidelines are specified.

Instruments and control panels should be placed normal to the operator's line of sight, or to the mean value if the line of sight varies through an angle. Instruments or displays providing visual information to more than one person should be located for easy viewing by all users concurrently, or if this is not possible, the instruments or displays should be duplicated. Instrument scales that are nonlinear or those requiring elaborate interpolation should be avoided wherever possible. Digital readouts should not be used where the reading changes rapidly. Instruments should be designed and installed to minimize glare or reflection or being obscured by strong light.

Instruments and controls should be labeled in the simplest and most direct manner possible. However, abbreviations should not be used unless they are commonly accepted; for example, use r/min (or rpm) rather than revolutions per minute.

All pushbuttons and control switches should be suitably protected to avoid accidental operation.

Nameplates should be designed to be read easily and accurately at the anticipated operational reading distances and conditions of illumination, considering such factors as contrast, size, method of imprinting, and relative legibility of alternative words. English character type should be News Gothic or similar sans serif.

For general dial and console panel design, character height in millimeters should be not less than three and one half times the reading distance in meters. Character width should be 0.7 times the character height with a minimum character size of 7 mm $\times$ 5 mm.

Controls or combined controls/indicators should be visually and tactually distinguishable from elements that only indicate. The shape of mechanical controls should indicate the method of operation of the control.

Operation and troubleshooting should not be combined in a single display, unless the comparable functions require the information simultaneously.

Displays should indicate a power failure or internal malfunction to an operator.

Display lighting may be accomplished by flood lighting, indirect lighting, edge lighting, or back lighting. Supplementary lighting or other special equipment should not be necessary to read a display. Reflectance of ambient illumination from glass or plastic cover should be avoided. All illumination and lighting of

Copyright © 2002 IEEE. All rights reserved.

Copyright The Institute of Electrical and Electronics Engineers, Inc.
Provided by IHS under license with IEEE
No reproduction or networking permitted without license from IHS Not for Resale

instruments should be adjustable down to zero, except the lighting of warning and alarm indicators and the control of the dimmers, which should remain readable.

Color coding of indicator lights and instruments should conform to the requirements of IMO Resolution A.686, Code on Alarms and Indicators. In addition, the general guidelines for the utility of colors in indicator lights are provided in Table 13.

Table 13—Guide line for color of indicator lights

Indicator light color/utility	Guideline
Flashing red	a) Corrective action must be taken. b) System or equipment is inoperative. c) Emergency condition exists. d) Potential personnel or equipment disaster.
Steady red	Fault condition exists, but has been acknowledged by the operator.
Amber	Marginal condition exists as far as system or equipment effectiveness is concerned.
Green	Condition is satisfactory.
White	Condition not having “right” or “wrong” implications, for example, power available.
Blue	Advisory light when an additional color is necessary; for example, system is ready for operation.

Mimics and flow diagrams may be provided where clarification of a system would be desirable, for example, fuel oil transfer, condensate systems, and so on.

The design and layout of instrumentation should be as simple as possible, consistent with the functions desired. The objective should be to provide an uncomplicated design that

a) Is functional, safe, and reliable
b) Is easy to operate and maintain
c) Requires minimum procedural processing
d) Reduces logistic, personnel, and training problems
e) Provides indicator and control lights in the wheel house area with dimmers for use at night

9.29 Identification and marking

Nameplates should be provided for each piece of apparatus installed on or in the console, clearly indicating its service. All electrical/electronic components should have suitable markings indicating the electrical characteristics of the equipment. Such markings may be by reference to drawings and parts lists.

Fuse holders or circuit breakers in the console should be identified as to rating and circuit. Relays should be identified as to circuit.

LRUs should be clearly identified as such, and the identification should be easily correlated to appropriate technical manual documentation.

Copyright © 2002 IEEE. All rights reserved.
Copyright The Institute of Electrical and Electronics Engineers, Inc.
Provided by IHS under license with IEEE
No reproduction or networking permitted without license from IHS
Not for Resale

9.30 Ventilation

Where control consoles are installed in the machinery space (a separate control room is not provided), a supply of filtered air separate from that of the machinery space should be provided for control consoles. Alternatively, local air conditioning may be provided to the consoles. Consoles fitted with self-contained air conditioning units should be arranged to provide free flow of air to its cooled cubicles.

Air filters to the forced-air cooling system should be readily accessible for removal and cleaning. There should be a warning signal provided for failure of the console integral air conditioning.

9.31 Sealing

Cable and pipe penetrations in the control consoles should be through the bottom and adequately sealed, protecting the enclosure from dust, condensation, and rodents.

9.32 Environmental monitoring

The machinery control system should include a capability of monitoring machinery plant discharges. This monitoring should be accompanied by an alarm and information display providing normal and abnormal ranges. Such information should be provided to the ship's data logging system as part of the ship's permanent record.

10. Control apparatus

10.1 General

Control circuits that extend outside the controller enclosure to remote devices should operate at 120 V or less, and conductors should be protected against damage from short-circuits. Conductors wired in series with current-limiting devices, such as coils and resistors, that are located within the enclosure are considered to be adequately protected. Conductors not protected by current limiting parts within the enclosure should be fused.

Except for steering gear, overload protection should be provided for all motors, either by overload device or by motor-winding temperature sensing devices. This recommendation may be disregarded where controllers are equipped with an overload, jamming, or stepback relay of the instantaneous trip type, which arranges to insert resistance into the rotor circuit when the load exceeds approximately 200% of rated load, and thereby limits the locked-rotor current to approximately 125% of rated current. For typical motor full load and overload protection current values, see Table 5.

The design of control apparatus should incorporate all possible steps to eliminate more than one source of potential in an enclosure. Where the control functions, such as interlocking, indicating light circuits, heater circuits, and so on, make it impracticable to connect the circuits to the load side of the controller contacts, but require a separate source of potential for successful operation, one of the following alternative precautions should be observed:

a) Limit the voltage of the circuit to not more than 55 V.
b) Provide a disconnecting device actuated by the panel door enclosure. The device and its connections should be designed so that there are no exposed electrically uninsulated surfaces.
c) A permanent instruction plate should be mounted on the external surface of the panel door enclosure stating that two or more sources of potential supply the equipment.

Copyright © 2002 IEEE. All rights reserved.

Copyright The Institute of Electrical and Electronics Engineers, Inc.
Provided by IHS under license with IEEE
No reproduction or networking permitted without license from IHS
Not for Resale

Controllers should have an internally mounted wiring diagram showing the complete circuitry, including external connections.

Where the ship arrangement conditions justify the application, it is recommended that consideration be given to arranging the controllers in groups in motor control centers, or on common panels.

Terminal studs or connection points equipped with compression lugs designed and tested for stranded conductors in accordance with UL 486A-1991, for wire connectors and lugs should be provided for all outgoing cables.

Controller enclosures, the metal cases of instruments, and the secondaries of all instrument transformers should be grounded to hull ground potential. All wearing parts of controllers should be readily accessible for inspection and renewal.

10.2 Installation and location

Control apparatus should be located and arranged to provide access to all parts and to facilitate operation, inspection, and maintenance. The apparatus should be in a dry area, away from fluid system piping, and in a location least liable to exposure to mechanical damage and excessive heat. No wood or similar flammable material should be used in the installation of control apparatus.

Resistors should be located to ensure adequate circulation of cooling air, and to prevent transmission of heat to adjacent equipment items.

Where a number of motor loads are located in close proximity, individual motor controllers may be group-mounted in motor control centers. Control apparatus recommendations apply when individual controllers are group-mounted, because switchboard recommendations are not appropriate. Motor control centers should have dripproof enclosures, and drip shields should be provided over the entire assembly if not otherwise protected by a false ceiling in the compartment in which they are installed.

Pushbuttons, switches, and similar control devices, except the actuating control elements, such as a thermal bulb or thermocouple initiating the operation, should not be installed in refrigerated spaces unless such a location is essential to the purpose for which it is provided. Control device enclosures should provide an appropriate degree of protection, consistent with their installed location in the ship.

A service nameplate should be provided on all motor controllers and control devices, designating the application, rating, and circuit number.

10.3 Types

Control and starting apparatus is generally of the manual, magnetic, or solid-state type. A controller should contain a switching device to control the application of power to the load and an overload device to provide load overheating protection.

For dc installations, the manual type usually consists of a line switch for fractional horsepower motors, or for larger motors, a panel type containing flat segments with a sliding contact or a drum type consisting of a rotatable cylinder fitted with projections or cams that close the contacts. These manually operated contacts carry the full motor current.

For ac motors, the control and starting apparatus may consist of a line switch, an across-the-line magnetic starter equipped with overcurrent protection, or a self-protected starter that combines circuit breaker, contactor, and overload relay providing coordinated motor circuit protection.

--`,,`-`-`,,`,,`,`,,`---
Copyright © 2002 IEEE. All rights reserved.
Copyright The Institute of Electrical and Electronics Engineers, Inc.
Provided by IHS under license with IEEE
No reproduction or networking permitted without license from IHS
Not for Resale

In the case of the magnetic type, the contacts that carry the motor current are operated by electromagnets designed to automatically accelerate the motor to a preset speed. Either time-limit or current-limit acceleration may be used. In order to start the operation of automatic acceleration or to stop the motor, two types of manually operated master switches are in general use. One type consists of a start-stop pushbutton station, and the other is a small drum-type master controller. These master switches conduct only the current levels necessary to operate the electromagnet coils.

Magnetic controllers are often configured for fully automatic operation by the application of a remote temperature, pressure, humidity, float, proximity, or optically operated device that starts and stops the motor within predetermined system limits.

In determining the proper type of starter for squirrel-cage ac motor applications, particular attention should be given to the capacity of the generating plant and the effects of the motor starting currents on the power system characteristics indicated in Table 4.

Reduced voltage ac starters should have starting and running overload protection, be of the manual or magnetic type, and should have self-contained autotransformers or resistors.

Solid-state type starters should inherently limit motor inrush current values.

Low-voltage protection should be provided, except in those cases where low-voltage release is required by the regulatory authorities. Manually operated ac starters that are not of the across-the-line type should be equipped with low-voltage protection to prevent across-the-line starting on return of voltage after an interruption. These starters should be provided with quick-make-and-break type switches and should be arranged so that it will be impossible to switch to the running position without having first gone through the starting position.

10.4 Protecting cases

All control apparatus, except when installed in switchboards, motor control centers, or in compartments assigned primarily to electrical equipment, should be protected by enclosures provided with hasps or the equivalent. In addition, where necessary to prevent unauthorized operation, means for locking should be provided.

Enclosures having hinged doors exceeding a height of 1145 mm or a width of 610 mm that, when open, expose live parts, should be provided with door positioners.

The types of enclosures for control apparatus should be determined by the location and, unless otherwise recommended, the following should apply:

a) Watertight enclosures should be used for deck machinery unless the apparatus is mounted in deck houses or below deck.
b) Splashproof or dripproof enclosures should be used when the apparatus is mounted in main or auxiliary machinery spaces, or similar spaces adjacent to a weather deck access, where the equipment may be subject to splashing, mechanical damage, or dripping fluids.
c) Dripproof enclosures should be used in all interior locations where the apparatus may be exposed to dripping fluids or condensation.
d) Provisions should be made for maintaining adequate ventilation of the apparatus components in all types of enclosures.

Enclosures should be of substantial metallic construction and should protect the control devices from damage due to liquids or solid matter falling from any angle up to 15 degrees from the vertical. Enclosures should be made of corrosion-resistant material or have corrosion-resistant coatings applied both inside and out.

Copyright © 2002 IEEE. All rights reserved.

Copyright The Institute of Electrical and Electronics Engineers, Inc.
Provided by IHS under license with IEEE
No reproduction or networking permitted without license from IHS
Not for Resale

Cable entrance plates should be provided on splashproof or dripproof enclosures having a volume exceeding 3300 cm^3. Top cable entrance plates should be fitted with gaskets, and should be at least 3.2 mm thick to permit tapping for terminal tubes. For splashproof enclosures, the bottom cable entrance plate should be similar to the top plate. For dripproof enclosures, when cables enter through the bottom entrance plate, standard clamps or bushings may be installed instead of terminal tubes.

10.5 Disconnecting means

For every motor controller, an integral means of disconnecting both the motor and the controller from all supply conductors should be provided. A manually operated motor controller for motors rated not more than 1.5 kW (2 HP) and not more than 250 V may use a single device to serve as both controller and motor disconnecting means, provided it has an ampere rating not less than twice the rated current of the motor.

For portable or semiportable motors supplied from a receptacle outlet, the plug and receptacle may serve as the disconnecting means.

Except as stated in the first paragraph of this subclause, for motors up to and including a 37-kW rating, the disconnect means should be a switch with a horsepower rating not less than the motor rating or a circuit breaker with an ampere rating at least 115% of the motor rating. For larger motors, the disconnect may be a switch or circuit breaker with an ampere rating 115% of the motor rating. Ampere-rated switches should be provided with a label plate warning against opening the circuit under load, except in an emergency.

The disconnect device may be in the same enclosure as the controller, or it may be in a separate enclosure adjacent to the controller and should be externally operated. The disconnect device should indicate by position of the handle, or otherwise, whether it is open or closed. If located in the same enclosure as the controller, the line side parts of the disconnect device should be guarded against accidental personnel contact. The branch circuit switch or circuit breaker on the distribution panel or switchboard may serve as the disconnect device if it meets all requirements herein and if it is in the same compartment as the motor controller. A disconnect device that is not within sight of both motor and controller, or that is more than 15 m from either, should be arranged for locking in the open position by means of a padlock. (Locks are not to be furnished with switches or panels unless specifically required.) The disconnect switch, if not directly adjacent to the controller, should be provided with an identification plate.

In motor control centers, the disconnecting means should be interlocked with the hinged door of the associated motor controller so as to either prevent the controller door from being opened while the circuit is energized or to cause the disconnect device to open in the event that the controller door is opened.

10.6 Manual starters and controllers

Manually operated controllers require manual operation of the main contact switching device to start or stop a motor. The device should contain a trip-free overload relay. The controller should be of rugged construction and arranged for operation without opening the enclosure. Low-voltage protection should be included.

10.7 Magnetic starters and controllers

Magnetic starters and motor controllers utilize electromagnetic main contactors to control the motor circuits that remotely start and stop the motors. The magnetic controllers should be operated by control circuits that include overload protection devices and are actuated by local or remote pushbuttons or similar master switches to suit the intended motor application. Either low-voltage release or low-voltage protection should be used, depending on the motor application and regulatory requirements.

Copyright © 2002 IEEE. All rights reserved.
Copyright The Institute of Electrical and Electronics Engineers, Inc.
Provided by IHS under license with IEEE
No reproduction or networking permitted without license from IHS
Not for Resale

10.8 Solid-state starters and controllers

Solid-state motor controllers utilizing static power converters have a wide range of applications in controlling shipboard machinery. Variable speed or soft starting motor controls can be used for pumps, fans, cranes, deck machinery, or any other application where variable speed, reversing, or precise speed control is desired. Converters can be dc/dc, dc/ac, ac/dc, or ac/ac and be either regenerative (four quadrant) or nonregenerative (two quadrant).

The location of solid-state motor controllers should be given careful consideration, especially for units requiring forced air cooling. Weather deck locations or locations subject to spray or washdown should be avoided. Engine room locations are acceptable as far as moisture is concerned, but elevated temperatures should be considered when sizing power components in high ambient temperatures. Units in machinery spaces should be rated for operation in a 45 °C environment. Solid-state motor controllers should be capable of operating in moist, dusty, and oil-laden atmospheres. Equipment should be able to withstand humidity levels of up to 95% and the vibration levels in 1.5.1. The units should be capable of continuous operation when the steady state power supply voltage and frequency variations are within the limits specified in Table 4.

Enclosures should be dripproof or watertight. Enclosure openings for cooling air should have filters. Devices requiring forced air cooling or controllers utilizing multiple load sharing power bridges should be equipped with over-temperature detectors for alarm (local and remote) and with remote shutdown. Backup equipment should be considered for units controlling vital machinery or other critical functions. Power semiconductors should have a peak inverse voltage (PIV) of 1200 V when connected to a power source of 480 V ac or less. Series connection of lower voltage devices should not be used to achieve the 1200 V rating. Semiconductors may be connected in parallel to increase current capacity provided circuitry is included to ensure equal load sharing.

In applications such as cranes, load lowering will cause power to be generated in the motors. This power must be absorbed by other power-consuming devices or the generator sets, or it must be dissipated as heat into dynamic braking resistors. Failure to absorb regenerated power may cause reverse current relays to operate or cause an overspeed condition on the generator prime mover. Multiple step braking resistor assemblies are recommended over single-step units. Multiple step control connects the minimum amount of resistance required to absorb a given level of regenerative power without causing undue stress on the generators or distribution system. Dynamic braking resistors should be protected against overheating.

Power may be supplied to a motor through a solid-state switching device that is controlled locally or remotely by suitable master switches. Soft-start or variable speed control may also be applied by the solid-state switching device. An electromagnetic device, such as a contactor, or a circuit breaker with shunt trip, or equivalent, should be provided for disconnecting the motor under fault conditions.

10.9 Medium voltage controllers

Medium-voltage motor controllers (1000 V rms or greater) should be electromagnetic controllers utilizing current-limiting power fuses, vacuum, sulfur hexaflouride (SF-6), or air break contactors and a medium-voltage isolating means to disconnect the medium-voltage supply. Generally, the features should be similar to those previously described for low-voltage controllers, but with the following additional recommendations:

a) The isolating means should be externally operable with position indication.
b) The isolating means should be capable of interrupting the no-load current of the control-circuit transformer supplied with the controller.
c) The isolating means may be a three-pole switch or a drawout-type contactor.

Copyright © 2002 IEEE. All rights reserved.

Copyright The Institute of Electrical and Electronics Engineers, Inc.
Provided by IHS under license with IEEE
No reproduction or networking permitted without license from IHS
Not for Resale

The medium-and low-voltage sections of a controller should be mechanically segregated by means of permanent barriers or movable shutters, where possible.

Mechanical means, or a combination of mechanical and electrical means, should provide the following interlocking features:

— Prevent the isolating means from being opened or closed unless all line contactors are open
— Prevent the opening of a medium-voltage compartment door when the isolating means are closed
— Prevent the isolating means from being closed when any medium-voltage compartment door of the controller is open

Control-circuit transformers should be provided with primary and secondary fuses. Instrument potential transformers should be provided with primary fuses. The control circuit voltage should be 115 V ac to permit contactor testing from an external control source. Interlocking for this test feature should be arranged so that power cannot be applied to the motor and so that the 115 V control circuit is disconnected from the normal control-circuit transformer.

Medium-voltage controllers should be wired and assembled as complete, enclosed, and freestanding units with provision for sway bracing. A means of ground connection of the enclosure by bare metal-to-metal contact with the ship's structure should be provided. The secondaries of instrument transformers should also be grounded to the ship's structure.

10.10 Pushbuttons

Separately mounted pushbuttons and master switches for use with magnetic starters and controllers should be of the oiltight type in dripproof or watertight enclosures, depending on their location. Pushbuttons mounted in accommodation areas may utilize a protected switchbox. Pushbutton and master switch enclosures may be of the nonmetallic, casting, or sheet metal type with corrosion protection as recommended in 1.8.1.

10.11 Resistors

Resistors, mounting devices, and enclosures should be rugged and able to withstand shipboard vibration. The elements of all classes of resistors should be of corrosion-resistant material or should be thoroughly protected against the corrosive action of salt spray and atmospheric moisture, either by an effective corrosion-treatment process or by being embedded in a material that will protect against corrosion.

10.12 Circuit breakers

Circuit breakers in motor controllers and motor control centers should comply with the recommendations in 8.6 and 5.9.

10.13 Knife blade switches and contacts

Knife blade switches and contacts should conform to the requirements set forth in 8.5.

10.14 Corrosion-resistant parts

To prevent deterioration and corrosion, bolts, nuts, pins, screws, terminals, springs, and similar parts that would be seriously damaged or rendered ineffective by corrosion should be made of corrosion-resistant material or, if made of steel, suitably protected against corrosion. Steel springs should be treated to resist corrosion in a manner that will not impair the spring quality. See 1.8.1.

--`,,-`-`,,`,,`,`,,`---
Copyright © 2002 IEEE. All rights reserved.
Copyright The Institute of Electrical and Electronics Engineers, Inc.
Provided by IHS under license with IEEE
No reproduction or networking permitted without license from IHS
Not for Resale

10.15 Nameplates

A nameplate providing the data listed [items a) through items h)] should be installed on each controller, secured to the front of the enclosure. An additional nameplate should be provided for each separately mounted component, such as circuit breakers, contactors, relays, or resistors giving sufficient data to provide identification and to facilitate the ordering of repair parts.

a) Marine (name of apparatus)
b) Name of manufacturer
c) Manufacturer's type number or class identification
d) Horsepower of motor
e) Rated volts
f) Rated current
g) Frequency (ac controllers only)
h) Number of phases (ac controllers only)

10.16 Tests

Prior to delivery, tests should be performed to ensure that the control apparatus is in accordance with these recommendations and is suitable for controlling the motor to which it is to be applied. It is not intended that each individual item of control apparatus be tested completely to verify compliance with these recommendations. Tests should be made to determine that the apparatus functions properly, with other tests performed or information obtained from previous tests on duplicate apparatus, as may be necessary to ensure that the apparatus meets these recommendations.

10.17 Limits of temperature rises

Temperature rise limits and measurement procedures are provided in Table 14. The temperature rise values are based on 50 °C ambient temperatures (see 10.17.8 for 45 °C ambient).

10.17.1 Coils

The temperature rise of coils, when tested in accordance with the rating, should not exceed the values given in Table 14. Temperatures are measured as indicated.

Table 14—Limits of observable temperature rises for ac and dc control

Coil type	Method of temperature determination (see 10.17.6 and 10.17.7)	Limits of observable temperature rise (degrees Celsius above 50 °C ambient)			
		A	B	F	H
Wire-wound coils	Thermometer	55	80	105	130
	Resistance	75	100	125	150
Single-layer series coils with exposed surfaces uninsulated or enameled	Thermometer	80[a]			

[a]Applies to coils with a fiber or other similar insulating sleeve or collar for insulating the coil from the frame or core.

Copyright © 2002 IEEE. All rights reserved.

Copyright The Institute of Electrical and Electronics Engineers, Inc.
Provided by IHS under license with IEEE
No reproduction or networking permitted without license from IHS
Not for Resale

10.17.2 Contacts

The temperature rise of contacts, when tested in accordance with the rating, should not exceed the following values: laminated contacts 55 °C, solid contacts 65 °C. All temperatures should be measured by the thermometer method described in 10.17.6.

10.17.3 Mechanical parts

Mechanical parts not in contact with insulation may reach temperatures that will not be injurious in any respect.

10.17.4 Buses, connecting straps, and terminals

The temperature rise, when tested in accordance with the rating, should not exceed 40 °C when measured by the thermometer method described in 10.17.6.

10.17.5 Resistors

The temperature rise, when tested in accordance with the rating, should not exceed 365 °C when the thermocouple is placed in contact with the resistive conductor, or 240 °C when the mercury thermometer is placed in contact with the embedding material. The temperature rise of the issuing air, when measured 1 in from the enclosure, should not exceed 165 °C. All temperatures should be measured by the thermometer method described in 10.17.6.

10.17.6 Thermometer method of temperature measurement defined

This method is the measurement of temperature by mercury or alcohol thermometers, by resistance thermometer, or by thermocouple, with the instrument being applied to the hottest accessible part of the apparatus.

10.17.7 Resistance method of temperature measurement defined

This method is the determination of the temperature rise by comparison of the measured winding resistance taken at operating conditions with the measured winding resistances taken at known minimum and maximum ambient temperatures. Measurements should be taken with the winding energized and deenergized.

10.17.8 Ambient temperature

Controllers installed in main and auxiliary machinery spaces containing significant heat sources such as prime movers and boilers should be selected on the basis of 50 °C ambient temperature. Controllers for other locations where the ambient temperature will not exceed approximately 45 °C may be selected on the basis of 45 °C ambient temperature. In the latter case, 10 °C additional rise should be allowed for all parts.

10.18 Insulation-voltage test

The standard test voltage for all switching and control apparatus should be as in Table 15.

The test voltage should be successively applied between each electric circuit and grounded metal parts, and between each principal electric circuit and all other principal circuits. Caution should be used in choosing points of application when sensitive devices, such as semiconductors, are included. Circuits that may be grounded in use should be disconnected from ground for this test.

Copyright © 2002 IEEE. All rights reserved.
Copyright The Institute of Electrical and Electronics Engineers, Inc.
Provided by IHS under license with IEEE
No reproduction or networking permitted without license from IHS
Not for Resale

Table 15—Insulation test voltages

Voltage rating (V)	Test voltage
0–600	1000 V + (2 × nominal voltage rating)
601–5000	2000 V + (2.5 × nominal voltage rating)

Other dielectric withstand test features, such as characteristics of test voltage, duration of tests, reduction of test voltage values for assemblies, and so on, should be in accordance with ANSI/NEMA ICS 1-1993.

10.19 General requirements for contactors

When subjected to destructive arcing, contactors should be provided with effective removable arc-rupturing contacts and magnetic blowouts or equivalent. They should not open or close because of shipboard vibration and inclination conditions as described for switchgear in 1.5.1.

When testing a contactor for successful operation at the minimum voltage for continuous duty, the contactor coil should be subjected to the normal line voltage until constant temperature is reached and then tested for successful closing at the minimum voltage.

10.19.1 AC contactors

AC contactors should be able to withstand 110% of rated voltage continuously without injury to the operating coils and should close successfully at 85% of rated voltage. Contactor should remain closed without chattering, at 70% of rated voltage.

10.19.2 DC contactors

DC contactors should be able to withstand 110% of rated voltage continuously without injury to the operating coil and should close successfully at 80% of rated voltage when the coil is at its maximum working temperature.

10.20 Rectifiers

10.20.1 General

This clause addresses power semiconductor rectifiers of the copper oxide, selenium, and silicon types. Copper oxide and selenium rectifiers are also known as metallic rectifiers. It should be noted these latter types of semiconductor rectifiers may exhibit changes in resistance characteristics with age, use, and temperature history.

Semiconductor rectifier cells (or devices) may be arranged in series assemblies, often referred to as “stacks,” and may be connected in various combinations of series and parallel circuits to form bridge, half-wave, voltage doubler, or other combinations.

Rectifier cells (or devices) may be connected to form various circuits, some intended to be operated from single-phase power sources and others from polyphase power sources.

The thermal and instantaneous overload protective devices incorporated in the unit should be coordinated with the capacities of the cells.

Copyright © 2002 IEEE. All rights reserved.

Copyright The Institute of Electrical and Electronics Engineers, Inc.
Provided by IHS under license with IEEE
No reproduction or networking permitted without license from IHS
Not for Resale

Surge suppression circuitry is required to prevent any transient voltages from exceeding the rated peak reverse voltage rating of the cells in the rectifier unit.

The rectifiers may be naturally cooled, forced-air-cooled, or liquid-cooled. Immersed and liquid-cooled rectifiers should use a nonflammable liquid. Immersed rectifiers should be capable of operation under the conditions in 1.5.1 without leakage.

10.20.2 Installation and location

Rectifiers should be installed in such a manner that the circulation of ventilating air to and from the rectifier or its enclosure (if any) is not impeded and the temperature of the inlet air to the air-cooled rectifiers does not exceed that for which the rectifier is designed. Caution should be exercised in the mounting of rectifiers near resistors, steam pipes, engine exhaust pipes, or other sources of radiant heat energy.

Naturally cooled rectifier cabinets should be designed with sufficient ventilating openings, or with sufficient radiating surface in the case of totally enclosed rectifiers, to operate within allowable temperature limits.

10.20.3 Accessibility

Rectifier stacks should be within at least a dripproof enclosure and mounted in such a manner that they may be removed without dismantling the complete unit.

10.20.4 Insulation

The insulation and clearances of semiconductor rectifier stacks and units should be capable of withstanding for a period of 1 min, the application of a 60-Hz ac rms potential of 1000 V plus twice the rated ac voltage between current-carrying parts of the ac input circuit and non-current-carrying metal parts that may be grounded, and current-carrying parts of an insulated secondary circuit where such a circuit exists.

If the semiconductor rectifier stack is connected in an insulated secondary circuit operating below 60 V, it should be capable of withstanding an ac test voltage of 600 V rms to all grounded non-current-carrying metal parts. If the secondary voltage is in the range of 60 V to 90 V, the ac test voltage should be 900 V rms.

Rectifier units having watertight enclosures should meet the above insulation test after having been subjected to an enclosure watertight test (see 3.7.13).

For purposes of maintenance and inspection, the insulation resistance of rectifier stacks measured to ground with an applied dc potential of 500 V should have an insulation resistance of not less than 10 Mohms. Should the insulation resistance measurement indicate the need for drying by heating, special care should be taken not to exceed the total maximum temperature limitations.

Mercury-type fungus protection will damage selenium-type semiconductors and should not be used.

10.20.5 Terminals

The ac terminals of semiconductors rectifiers stacks should be marked with the letters ac. The positive dc terminal should be marked with (+). The negative dc terminal should be marked with a minus (–). Solder-type or solderless-type terminals should be supplied on semiconductor rectifier stacks.

10.20.6 Corrosion-resistant parts

Enclosures, working parts, and other parts of semiconductor rectifiers should be made of corrosion-resistant material or of material suitably protected against corrosion.

Copyright © 2002 IEEE. All rights reserved.
Copyright The Institute of Electrical and Electronics Engineers, Inc.
Provided by IHS under license with IEEE
No reproduction or networking permitted without license from IHS
Not for Resale

10.20.7 Ambient temperature

All rectifiers should be rated for continuous duty at the ambient temperature of the installed location (see 1.5.1). In the case of water-cooled rectifiers, equipment should operate satisfactorily with a maximum cooling water inlet temperature of 36 °C. All equipment should operate down to 0 °C ambient conditions. Cooling water temperatures and ambient air temperatures should be measured at the point where the cooling medium enters the rectifier unit enclosure.

Where higher than the above ambient temperatures may be encountered, rectifiers should be derated to limit the total maximum temperature.

10.20.8 Temperature rise

The temperature rise under all operating conditions should be limited to a value that will permit the rectifier to meet the specified performance requirements.

10.20.9 Application

Where forced cooling is utilized, the circuit should be designed so that power cannot be applied to or retained on rectifiers, unless effective cooling is maintained. Failure of the cooling system should initiate an audible and visual alarm.

All rectifiers should operate under frequency and voltage variations as specified in Clause 4.

10.20.10 Rectifier transformers

Transformers used with rectifiers should be designed to be compatible with the rectifier (refer to 31.6). Transformer voltage output adjusting means should be provided to take care of any increase in rectifier forward resistance and to obtain the necessary performance characteristics of the rectifier unit in which the transformer was used.

10.20.11 Power converters for ship service applications

The number and rating of power converters that supply services and systems that are essential for the propulsion and safety of the ship should be such that with any one converter not in operation, the remaining converter(s) are capable of supplying the services and systems. Each power converter should be installed in a separate enclosure as an individual unit.

10.20.12 Instruction books and nameplates

An instruction book, with wiring diagrams and schematics, should be provided for each installation.

A nameplate, with the following information, should be provided on each semiconductor rectifiers:

a) Marine semiconductor rectifier
b) Manufacturer’s name and address
c) Manufacturer’s serial number
d) Rated input voltage
e) Rated input amperes
f) Number of phases
g) Frequency
h) Rated output voltage
i) Rated output amperes

Copyright © 2002 IEEE. All rights reserved.

Copyright The Institute of Electrical and Electronics Engineers, Inc.
Provided by IHS under license with IEEE
No reproduction or networking permitted without license from IHS
Not for Resale

j) Duty cycle (continuous or intermittent)
k) Maximum ambient temperature

Additionally, the manufacturer's identification should be shown on the rectifier stack.

When the above information in this subclause cannot be shown on the rectifiers because of space limitations, a nameplate should be provided that identifies the manufacturer and catalog number. The other information should be shown on the schematic or wiring diagram supplied in the instruction book.

10.20.13 Tests

Tests should be made at the manufacturer's factory to ensure that semiconductor rectifiers are in accordance with these recommendations. When a rectifier is a duplicate of one already tested, only tests required to demonstrate that the rectifier operates successfully need be performed.

11. Control application

11.1 General

Auxiliaries for propulsion and ship service equipment should include the apparatus necessary for starting, stopping, reversing, and controlling the speed of motors, together with essential safety devices. The application of the various types of controllers and starters should be given careful consideration for the particular conditions surrounding each auxiliary, including the location, the nature and length of duty to be performed, and convenience of operation and maintenance.

Controllers should be manual, magnetic, or solid-state depending on the required features, such as type of protection, performance, whether integral or remote control, and on the rating of the motor controlled.

All low-voltage motor control centers using either molded cases circuit breakers or fusible disconnect switches shall meet the requirements of UL 845-1995 or IEC 60437.

11.1.1 Motor undervoltage protection

All controllers should provide motor protection against undervoltage conditions by either low-voltage protection (LVP) or low-voltage release (LVR). LVP and LVR disconnect the motor when the voltage has dropped below 80% of rated voltage and allow a motor to be restarted when the voltage is above 85% of rated voltage.

LVP will prevent automatic motor restart by requiring operator reset action. This can prevent overloading the electrical system by reducing the cumulative magnitude of starting inrush currents from simultaneous motor starting. LVP can also prevent damage to driven auxiliaries and prevent possible injury to operating personnel by inhibiting automatic restart.

LVR provides for automatic motor restart upon restoration of voltage. LVR should be provided for certain essential auxiliaries. The use of controllers of the LVR type should be limited to avoid excessive starting current when a group of motors with LVR controllers are restarted automatically upon return of voltage after a voltage failure. Sequential starting should be considered.

Each motor controller for a fire pump, passenger elevator, steering gear, or auxiliary that is essential to the vessel's propulsion system should have LVR if automatic restart after voltage restoration is not hazardous. If automatic restart is hazardous, the motor controller should have LVP. Motor controllers for nonessential

Copyright © 2002 IEEE. All rights reserved.
Copyright The Institute of Electrical and Electronics Engineers, Inc.
Provided by IHS under license with IEEE
No reproduction or networking permitted without license from IHS
Not for Resale

motors should not have LVR unless the starting inrush current and the short-time sustained current of the additional LVR load is within the capacity of one generator set.

Manual-type controllers may be used for small motors where the starting current limitation protective feature of LVP is not necessary and where the application results in smaller and lighter equipment.

11.1.2 AC controllers

AC controllers should be selected on the basis of the starting characteristics of the motor, the effects of voltage dips resulting from starting current on the distribution system, the torque, and the mechanical requirements of the drive. Controllers should be selected so that voltage dips on the power distribution system do not exceed the following values under motor starting conditions:

a) Motor-driven auxiliaries such as an air conditioner, air compressor, or refrigerator, which in normal operation may start several times an hour, should not produce a voltage dip at the generator switchboard in excess of 10% or a permanent voltage reduction in excess of 5%.
b) Other motor-driven auxiliaries such as fire pumps, anchor windlass, motor-generator sets, and steering gear, which in normal operation do not start several times an hour, should not produce a voltage dip at the generator switchboard in excess of 18%. This is the maximum permissible voltage dip at the generator switchboard.
c) Any motor fed from a remote load center that does not start several times an hour should not produce a voltage dip greater than 20% at the load center.
d) A group of motors that automatically restart upon closing a feeder breaker should not produce a voltage dip greater than 30% at the power panel from that supplied, or a dip that will prevent supplying the starting torque requirements of the most remote motor.

The use of open transition wye-delta windings on multispeed induction motors should be avoided as far as practicable because of the difficulties associated with the greater number of controller contacts and cable conductors required for the controllers for motors with such windings.

11.1.3 DC controllers

In general, across the line, dc controllers should be used only with motors rated 0.75 kW (1 HP) and smaller. DC controllers should provide smooth acceleration of the load.

11.1.4 Overload relays and ambient temperature

When the controller is located in an area where the ambient temperature may differ from that of the motor controlled, or when the motor drives auxiliaries whose interruption of service would seriously interfere with the safe operation of the vessel, ambient compensated overload relays should be used. The change in pickup setting should not be more than 5% for each 10 °C change in ambient temperature in the range between 20 °C and 70 °C.[23]

11.2 Deck machinery

11.2.1 General

Deck machinery should use a reversible controller with speed control as required where the motor is directly connected to the machine. Unless the design prevents application of an overhauling load to the driving

[23] 10 °C = 50 °F
20 °C = 68 °F
70 °C = 158 °F

Copyright © 2002 IEEE. All rights reserved.

Copyright The Institute of Electrical and Electronics Engineers, Inc.
Provided by IHS under license with IEEE
No reproduction or networking permitted without license from IHS
Not for Resale

motor under all conditions of operation, care should be taken to accommodate the accompanying reverse power. Where an electrohydraulic drive is used, nonreversing controllers should be used for the pump motors.

Magnetic brakes should be used for stopping and holding the load, unless the equipment is inherently self-locking, or another type of load brake is supplied. On all dc installations, automatic dynamic braking should be provided on all points lowering. Automatic stalling protection should be provided where required by the application.

Resistors, where used, should be of the nonbreakable and corrosion-resistant type. Resistors and power electronics devices carrying motor load should be capable of carrying 125% load for 5 min. DC installations of the rheostatic type should have an armature shunt point on the first position in each direction.

11.2.2 Capstan and windlass

The control equipment of a line-handling capstan, or an anchor windlass with direct-connected motor used as a capstan, should be interlocked with the mechanical equipment and designed to provide the same speed-torque characteristic for both directions of rotation.

A jamming or step-back overload relay of the instantaneous type should be installed to provide current limiting of the motor circuit when the load exceeds approximately 200% of rated load and thereby limit the stalled motor current to approximately 125% of rated current. Magnetic controllers should be designed to automatically reset the jamming or step-back relay. The control setting should automatically return to a position corresponding to the setting of the master switch. Manual controllers should be designed to be returned to the first position to reset the jamming or step-back relay before the motor can be brought up to speed again.

For small vessels, where the capstan motor is less than 3.7 kW (5 HP), a nonreversing controller with one running point may be used.

11.2.3 Cargo and utility winches

For cargo winch service, manual control may be used for ratings up to and including 7.5 kW (10 HP) at 115 V and 16 kW at 460 V and 575 V. General utility winches for infrequent service may be equipped with manual control up to and including 19 kW at 115 V and 37 kW at 460 V and 575 V.

11.2.4 Electric power-operated boat winches

Each motor controller and switch associated with an electric power-operated boat winch should be designed to prevent corrosion of its working parts. Each structural part, such as an enclosing case, if not made of corrosion-resistant materials, should have a corrosion-resistant finish. Insulating material should have low water absorption properties, and the effect of such water absorption should not significantly decrease the material's dielectric properties.

Each device in the weather should be watertight or in a watertight enclosure. Where a gasket is used for a water seal between parts of an assembly, the gasket should be fixed to prevent its falling out or becoming loose when the unit is disassembled. A hole in an equipment housing for the purposes of providing means for the attachment of a part on its interior or for securing a cover or similar device should not penetrate the total thickness of the housing. Each totally enclosed unit should have a valve, or at least one hole with a minimum diameter of 13 mm closed by a pipe plug. The valve or hole should be at the bottom of the enclosure or as near the bottom as practicable.

Copyright © 2002 IEEE. All rights reserved.
Copyright The Institute of Electrical and Electronics Engineers, Inc.
Provided by IHS under license with IEEE
No reproduction or networking permitted without license from IHS
Not for Resale

Each boat winch motor controller should have a main line emergency disconnect switch. If accessible to an unauthorized person, the switch should have a means for locking in the open-circuit position. The switch should not be capable of being locked in the closed-circuit position.

11.3 Ventilation fans

AC starters may be of the fused switch, across-the-line, reduced voltage, two-speed, solid-state, or wound-rotor type equipped with overcurrent protection for either manual or magnetic operation depending on the size and amount of speed control required.

DC starters may be arranged for speed regulation by armature or field control, or both, as required by the application. For motors of appreciable size, field control is recommended because the operating losses are kept to a minimum.

Motors that should not restart after voltage failure should be equipped with low-voltage protection.

11.4 Galley, laundry, workshop, print shop, and similar spaces

Control for appliances located in the above spaces should have dripproof enclosures unless the equipment enclosure provides an equivalent degree of protection. These controls should preferably be of the magnetic type where other than a line switch is required. Magnetic type control may be supplied to function with a master switch of either the pushbutton or drum type. Automatic appliances such as refrigerators, drinking fountains, and so on, if permanently connected to the electric power system, should have an adjacent enclosed switch that disconnects all conductors, or should be fed from a distribution panel located near the appliances. If the appliance is connected to the power system by means of a portable cord and an attachment plug that disconnects all conductors, no switch is required.

11.5 Machinery space auxiliaries

Controllers for machinery space auxiliaries, such as pumps, should be provided with the degree of speed control required by the driven equipment. Low-voltage release should be provided on controllers for certain auxiliaries that are essential to the operation of the propulsion plant, such as lube oil, condensate, circulating, feed, and cooling water pumps, where the automatic restart after a voltage failure will not have any deleterious effects to the system voltage. Where deleterious effects to the system voltage may result, sequential starting should be considered to ensure compliance with the recommendations in Table 4.

11.6 Air compressor

Compressors equipped with more than one stage should have an automatic unloading device to facilitate motor starting.

11.7 Remote stopping systems

11.7.1 Power ventilation systems

All ventilation systems should be provided with remote means for stopping the motors in case of fire or other emergency. The emergency means for stopping machinery space ventilation fans, accommodation ventilation fans, and vehicular/cargo space ventilation fans should be separate and completely independent of each other.

Copyright © 2002 IEEE. All rights reserved.

Copyright The Institute of Electrical and Electronics Engineers, Inc.
Provided by IHS under license with IEEE
No reproduction or networking permitted without license from IHS Not for Resale

The circuit breakers for ventilation circuits should be grouped on the main switchboard and marked, “IN CASE OF FIRE TRIP TO STOP VENTILATION.”

For the machinery space ventilation, the remote stop means should be provided in the passageway leading to, but outside of, the machinery space or should be in the machinery space firefighting station. For all other ventilation systems, two emergency stop stations should be provided, one in the navigating bridge, and the second as far away as practicable. The circuit breaker feeding power to the equipment for these systems may be considered as the second station. The recommendations in this paragraph do not apply to closed ventilation systems for motors or generators, diffuser fans for refrigerated spaces, room circulating fans, or exhaust fans for private toilets of an electrical rating comparable to that of a room circulating fan.

11.7.2 Machinery systems

Each forced draft fan, induced draft fan, blower of an inert gas system, fuel oil transfer pump, fuel oil unit, fuel oil service pump, fuel oil centrifuge, lube oil centrifuge, lube oil service pump, lube oil transfer pump, and any other oil pump should have a stop control that is outside the machinery space, adjacent to the machinery space ventilation remote stop, and accessible in the event of fire in the space.

Emergency stop switches should be provided in a convenient location for any motor-driven pump whose overboard discharge is above the light load line and discharges in way of lifeboat or liferaft launching gear. These switches should be installed in waterproof locked enclosures with “break-glass” covers or an equivalent for emergency access. The stop control should be suitably protected against accidental operation or tampering and should be suitably marked.

11.7.3 Machinery and ventilation stop systems

The system for remote stopping of ventilation, fuel oil pumps, lubricating oil pumps, oil transfer, and centrifuge pumps should not require a separate power source.

The emergency stop stations should be protected by glass doors marked “IN CASE OF FIRE BREAK GLASS AND PUSH BUTTON TO STOP VENTILATION/OIL PUMPS” (or other suitable wording to reflect the type of switch or actuator and the equipment to be stopped). Each stopping device should be provided with a nameplate identifying the system it stops. The remote stop system should be of the undervoltage protection type and be arranged so that severe damage to the master switch or cable will automatically stop the equipment.

Means for stopping galley equipment exhaust fans should also be located in a station immediately outside the galley door.

12. Transformers

12.1 General

Dry type transformers should have copper windings, be air cooled by natural circulation, and have a dripproof enclosure as a minimum. Where used for essential services and located in areas where sprinkler heads or spraying devices for fire prevention are fitted, they should be enclosed so that water cannot cause malfunction.

In cases in which capacity, space, or other restrictions warrant, transformers may be of the immersed (non-flammable liquid), self-cooled, or other suitable type. Immersed type transformers should be suitable for operation at 40° inclination without leakage and provided with a liquid level gauge to give indication of the level of liquid. Drip tray(s) or other suitable arrangements should be provided for collecting liquid leakage.

--`,,-`-`,,`,,`,`,,`---

Copyright © 2002 IEEE. All rights reserved.
Copyright The Institute of Electrical and Electronics Engineers, Inc.
Provided by IHS under license with IEEE
No reproduction or networking permitted without license from IHS
Not for Resale

All transformers should be capable of withstanding the thermal and mechanical effects of a short-circuit at the terminals of any winding for 2 s without damage. Foil-wound transformers constructed of conductors that are uncoated should be vacuum impregnated. Transformers should comply with ANSI C57 or IEC 60726, as applicable to the type, size, application, and voltage rating of the units installed.

12.2 Installation and location

Transformers should be located in dry, well-ventilated places, avoiding exposure to the possibility of leaking pipes or condensation. Transformers should be placed so that, insofar as practicable, they are not exposed to mechanical damage. Transformers should be located and mounted to preclude excessive noise in accommodation areas. Suitable lifting lugs or eye bolts should be provided for transformers weighing more than 50 kg.

12.3 Type, number, and rating

The number and rating of transformers supplying services and systems essential to the safety or propulsion of the ship should have sufficient capacity to ensure the operation of those services and systems even when one transformer is out of service. Transformers should be either the three-phase type or the single-phase type, suitable for connection in a three-phase bank, with a Class B temperature rise. All distribution and control transformers should have isolated primary and secondary windings. Transformers with electrostatic shielding between windings should be used in distribution systems containing nonlinear load devices. Autotransformers should be used only for reduced voltage motor starting or other suitable special applications.

12.4 Voltage regulation

The inherent voltage regulation of transformers, at rated output, should be such that the maximum voltage drop to any point in the system in which the transformers are applied does not exceed the system voltage drop values in 5.5.1.

12.5 Parallel operation

Transformers for parallel operation should have coupling groups and voltage regulation characteristics that are compatible. The actual current of each transformer operating in parallel should not differ from its proportional share of the load by more than 10% of full load current. A means of isolating the secondary connections should be provided.

12.6 Temperature rise

The limits of temperature rise in a 40 °C ambient should be in accordance with Table 16. Transformers should also be designed to operate in an ambient temperature of 50 °C without exceeding the recommended total hot spot temperature, provided the output kilovoltampere at rated voltage does not exceed 90% of the rated capacity of the transformer with Class A insulation and 94% of the rated capacity of a transformer with Class B insulation.

12.7 Terminals and connections

Provision should be made to permit the ready connection of external cables to the primary and secondary leads in an enclosed space of adequate size to prevent overheating. Terminals should be readily accessible for inspection and maintenance.

Copyright © 2002 IEEE. All rights reserved.

Copyright The Institute of Electrical and Electronics Engineers, Inc.
Provided by IHS under license with IEEE
No reproduction or networking permitted without license from IHS
Not for Resale

Table 16—Transformers and dc balance coils temperature rise

Copper temperature rise by resistance (°C)					Hottest spot temperature rise (°C)			
Class of insulation								
Part	A	B	F	H	A	B	F	H
Insulated windings	55	80	115	150	65	110	145	180
NOTE—Metallic parts in contact with or adjacent to insulation shall not attain a temperature in excess of that allowed for the hottest spot copper temperature adjacent to that insulation.								

Single-phase transformers should permit the use of single conductor cables, without undesirable inductive heating effects, when interconnecting three single-phase transformers in a three-phase bank.

Transformers should be furnished with a permanently attached diagram plate that shows the leads and internal connections and their markings and the voltages obtainable with the various connections.

12.8 Nameplates

The following is the minimum information that should be given on nameplates:

a) Serial number or catalog number
b) Type or form
c) Number of phase (except single-phase)
d) Kilovoltampere ratings
e) No-load voltage rating
f) Frequency
g) Temperature rise
h) Percent impedance
i) Connection type (e.g., delta-delta)

13. Motors

13.1 General application

All motors should be compatible with the voltage, phase, and frequency of the supply system. The construction and type of winding should be determined by the conditions under which the motor will operate. Motors may be of the wound-rotor induction, squirrel-cage induction, synchronous, or suitable commutator type. Motors should be constructed so that their operation is not impaired by vibration and shock likely to arise under normal service conditions. Windings and current-carrying parts should be copper, and fasteners securing the current-carrying parts should be provided with means to prevent loosening caused by vibration. Motors used with adjustable speed drives should be capable of operating successfully on the nonsinusoidal input power from the drive. Squirrel-cage induction motors should be used wherever suitable.

Where water-cooling is used, the cooler should be arranged to prevent water entry into the machine from heat exchanger leakage or condensation.

Copyright © 2002 IEEE. All rights reserved.
Copyright The Institute of Electrical and Electronics Engineers, Inc.
Provided by IHS under license with IEEE
No reproduction or networking permitted without license from IHS
Not for Resale

Motors in damp spaces or in the weather, especially motors left idle for appreciable periods, should be provided with an effective means (e.g., internal heaters) to prevent the accumulation of condensation.

Measures should be taken, where necessary, to prevent the circulation of current between the shaft and the bearings.

In the interest of achieving a favorable power factor, motors should be selected that closely meet the actual load requirements. Oversize motors should be avoided.

Care should be taken to locate dripproof motors to avoid bilge water. In general, motors should not be located below the level of the floor plates unless they are watertight. However, where located in openings in the floor plates where they are not subjected to splashing bilge water and are readily visible and serviceable, dripproof motors may be used.

13.2 AC and dc motors—general

Electric motors are selected for the load requirements and the voltage, phase, and frequency of the power system. The motor design and construction should be suitable for both the load application and environmental conditions. For most applications, three-phase squirrel cage induction motors are recommended. Motors should be designed and constructed to meet NEMA or IEC dimensional and performance standards. For motors 7.5 kW (10 HP) to 373 kW (500 HP), it is recommended that motors comply with IEEE Std 841-2001. For motors larger than 373 kW (500 HP), it is recommended that motors comply with API Std 541.

Variable-speed ac motors, in addition to the requirements of this subclause, should be carefully matched to the drive motor controller for optimum performance.

13.3 Selection

13.3.1 Three-phase motor voltages

The normally recommended voltage for ac three-phase integral horsepower motors operated on 480-V systems is 460 V. Motors rated for 200, 230, 380, 400, 575, and 660 V are recommended for supply systems voltages of 208, 240, 400, 420, 600, or 690 V, respectively. Where motors larger than 150 kW (200 hp) are used, 2300, 3300, 4000, or 6000 V volt motors are usually preferable. In view of the problems of classified locations and severe environmental conditions, special consideration should be given to all aspects of the installation before using motors and related controllers of voltages above 690 V.

13.3.2 Single-phase ac motor voltages

Single-phase motors, normally limited to fractional horsepower loads, usually are rated at 115, 200, 220, and 208/230 V when driving fixed equipment. For portable motors, 115 V or 220 V are preferred.

13.3.3 Supply voltage

The supply voltage and frequency should be as near the nameplate rating as practical and should not deviate more than 10% in voltage and 5% in frequency, above or below rating. The sum of voltage and frequency deviations may total 10%, provided the frequency deviation does not exceed 5%.

--`,,`-`-`,,`,,`,`,,`---
Copyright © 2002 IEEE. All rights reserved.

Copyright The Institute of Electrical and Electronics Engineers, Inc.
Provided by IHS under license with IEEE
No reproduction or networking permitted without license from IHS
Not for Resale

13.4 Installation and location

Motors exposed to the weather or located where they would be exposed to seas, splashing, or other severe moisture conditions should be watertight or protected by watertight enclosures. Such enclosures should be designed to prevent internal temperatures in excess of motor ratings. Motors should be located so they cannot be damaged by bilge water. Where such a location is unavoidable, they should be either submersible or provided with a watertight coaming to form a well around the base of the equipment and a means for removing water. A suitable NEMA or IEC enclosure should be used (reference Annex C) as required by the authority having jurisdiction. Fan-cooled motors should not be installed in locations subject to ice formation.

For motors in hazardous locations, see Clause 33.

Horizontal motors should be installed, as far as practicable, with the rotor or armature shafts in the fore and aft direction of the vessel. If motors must be mounted in a vertical or an athwartship position, the motors should have bearings appropriate for the intended installation.

Motors (except for submersible motors, sealed motors, or motors for hazardous locations) should be designed to permit ready removal of the rotor, stator components, and bearings, and to facilitate bearing maintenance. All wound-rotor ac motors, synchronous motors, and commutating motors of the enclosed type, except fractional horsepower motors, should have viewing ports or readily removable covers at the slip ring or commutator end for inspection of the rings, commutator, and brushes while in operation.

Eyebolts or equivalent should be provided for lifting motors.

13.5 Insulation of windings

Insulating materials and insulated windings should be resistant to moisture, sea air, and oil vapor. All form-wound coils for ac motors and assembled armatures, and the armature coil for open-slot dc construction, should utilize vacuum pressure impregnated solventless epoxy insulating systems.

For ac motors, all random-wound stators and rotors having insulated windings should utilize vacuum pressure impregnated solventless epoxy Class F or H insulation systems, with Class B rise, or be of the encapsulated type.

Most standard NEMA frame motors are fabricated using nonhygroscopic NEMA Class F or H insulation. In totally enclosed motors, the normal insulation can be expected to provide satisfactory service. If open dripproof or weather-protected motors are selected, it is recommended that the insulation be a sealed system. Motors with NEMA Class F insulation and with a NEMA Class B rise at rated motor horsepower are available in most motor sizes and types and are recommended to provide an increased service factor and longer insulation life.

All field coils for dc motors should be treated with varnish or other insulating compound while being wound, or should be impregnated. The finished winding should be water- and oil-resistant.

Abnormal brush wear and commutator maintenance may occur in motors containing silicon materials. Silicon materials should not be used in motors with brushes.

13.6 Locked rotor kVA

Three-phase induction motors normally are designed for a starting kVA of five to six times the horsepower rating. This starting kVA corresponds to NEMA locked rotor Codes F and G and is suitable for most applications. IEC motors exhibit related characteristics, but not 100% equivalent. It may be desirable that

Copyright © 2002 IEEE. All rights reserved.
Copyright The Institute of Electrical and Electronics Engineers, Inc.
Provided by IHS under license with IEEE
No reproduction or networking permitted without license from IHS
Not for Resale

large motors be specified with lower inrush currents to minimize the effects of starting on the power source. Consult the motor manufacturer for specific details.

13.7 Efficiency

It is recommended that designers of new installations consider the use energy-efficient motors. For a given horsepower rating and speed, the efficiency of a motor is primarily a function of load. The full load efficiency generally increases as the rated horsepower or speed increase.

Efficiency increases with a decrease in slip (difference between synchronous speed and full load speed of an induction motor, divided by the synchronous speed). High slip motors usually yield higher overall efficiency for applications involving pulsating, high inertia loads.

Reference ANSI/NEMA MG 1-1998 or IEC 60034 for additional guidance. Generally, the inrush current on energy-efficient motors is higher than that for standard motors.

13.8 Lubrication

See 1.5.1, ship's service equipment, for pitch, roll, and inclination requirements for motor lubrication systems.

Means should be provided to prevent lubricant from creeping along the shaft or otherwise contacting the insulation or any live part. Each oil-lubricated bearing should be provided with an overflow. Where ring lubrication is employed, the rings should be constrained so that they cannot leave the shaft. Each self-lubricated sleeve bearing on a machine 100-kVA ac/100-kW dc or greater should be fitted with an oil gauge or an inspection cover for visual indication of oil level.

13.9 Terminal arrangements

All motors should be provided with terminal boxes appropriate to their type of enclosure. Terminal boxes should be of sufficient size to accommodate wiring without crowding, and each box should be of adequate mechanical strength and rigidity to protect the contents and to prevent distortion under all normal conditions of service.

Cables of different voltage classes shall not be terminated in the same terminal box. Wiring for instrumentation, sensors and safety devices should be installed in separate terminal boxes.

Motors should have the terminal leads suitably secured to the motor frame. The end of these leads should be fitted with approved connectors suitable for use with terminal lugs on incoming cables. All connections to the interior of motors as well as those to the power supply should be provided with efficient locking devices.

The leads of watertight motors should be brought into watertight junction boxes through watertight seals. The leads of explosionproof motors should be terminated to maintain the explosionproof integrity of the motor.

Special consideration should be given to terminal enclosures of multispeed ac motors to ensure adequate space for connecting and insulating multiple cables.

Copyright © 2002 IEEE. All rights reserved.

Copyright The Institute of Electrical and Electronics Engineers, Inc.
Provided by IHS under license with IEEE
No reproduction or networking permitted without license from IHS Not for Resale

13.10 Corrosion-resistance parts

All motor screens, interior bolts, nuts, pins, screws, terminals, brushholder studs, springs, handhole cover bolts, nuts, and such other small parts that would be seriously damaged and rendered ineffective by corrosion should be corrosion-resistant. Steel springs should be treated to resist moisture in such a manner as not to impair their spring quality.

Motors should be painted with a corrosion-resistant finish or otherwise protected against corrosion.

13.11 Nameplates

All motors should be fitted with nameplates of corrosion-resistant material. Motor nameplates should be in accordance with the appropriate standard of construction for the motor.

13.12 Ambient temperature

Motors for main and auxiliary machinery spaces containing significant heat sources such as prime movers and boilers, except machine tools, should be selected on the basis of a 50 °C ambient temperature or the actual expected maximum. Motors for machine tools may be selected on the basis of 40 °C ambient temperature. Motors in locations where the ambient temperature will not exceed 40 °C may be selected on the basis of 40 °C ambient temperature.

Motors that must be installed where the temperature normally will exceed 50 °C should be considered as special and should be designed for 65 °C or the actual expected ambient temperature. Consideration should be given to ensuring satisfactory lubrication at high temperatures.

If a machine is to be utilized in a space in which the machine's rated ambient temperature is below the assumed ambient temperature of the space, it should be used at a derated load. The assumed ambient temperature of the space plus the machine's actual temperature rise at its derated load should not exceed the machine's total rated temperature (machine's rated ambient temperature plus its rated temperature rise).

13.13 Limits of temperature rise

It is recommended that ac and dc motors have a design temperature rise of 80 °C, by resistance, in a 40 °C ambient temperature (NEMA Class B), but be constructed with a minimum of NEMA Class F insulation to provide optimum balance between initial cost and long-life operations. Reference 1.5.1 for the applicable ambient temperature requirements.

AC and dc motors normally are designed for 40 °C ambient temperatures, and thus, they should be derated in accordance with manufacturer's recommendations if operated in higher ambient temperatures. Insulation of motor windings with quality insulation materials that are designed to be resistant to the salt laden moist atmosphere locations is recommended.

Deck-winch and direct-acting capstan motors should be rated on a full load run of at least 1/2 h; direct-acting windlass motors should be rated on a full load run of at least 1/2 h; and those operating through hydraulic transmission should be rated for 30-min idle pump operation, followed by full load for 1/4 h. Steering-gear control motors should be rated on a full load run of 1 h.

The temperature rise of each of the various parts of ac motors and dc motors when tested in accordance with the full load rating should not exceed values given in Table 17.

Copyright © 2002 IEEE. All rights reserved.
Copyright The Institute of Electrical and Electronics Engineers, Inc.
Provided by IHS under license with IEEE
No reproduction or networking permitted without license from IHS
Not for Resale

Table 17—Limits of observable temperature rise for ac motors

Item	Machine part	Method of temperature determination	Ambient							
			50 °C				65 °C			
			A	B	F	H	A	B	F	H
1	**Windings**									
	a) All except b) and c)	Resistance	50	70	95	115	34	60	80	105
	b) Totally enclosed nonventilated enclosures only	Resistance	55	75	100	125	40	65	85	110
	c) Encapsulated only	Resistance	55	75	100		40	65	85	
2	d) 1550 hp and less	Embedded detector	60	80	105	130	40	65	90	115
	e) Over 1500 hp	Embedded detector	55	75	100	125	40	65	85	110
	Field winding of synchronous motors									
	a) Salient pole	Resistance	50	70	95	115	35	60	80	105
	b) Cylindrical rotor	Resistance		75	95	115		65	85	105

Where provision is made for ensuring an ambient temperature being maintained at 40 °C or less, as by air cooling or by location outside of the boiler and engine rooms, the temperature rises of the windings may be 10 °C higher.

13.14 Insulation tests

Insulation tests should be made in accordance with the recommendations in IEEE Std 43-1974 with the machine windings in a clean, dry condition. The results obtained from the tests depend not only on the characteristics of the insulation materials and the way they are applied, but also on the test conditions. It is recommended that the data recorded during the tests include ambient conditions, particularly those concerning the ambient temperature and the degree of humidity at the time of the test. The Polarization Index (ratio of 10 min to 1 min insulation resistance value) for the machine windings should be evaluated. The recommended Polarization Index minimum value for ac and dc rotating machines is 2.0.

13.15 Insulation resistance

The resistance should be measured with all circuits of equal voltage above ground connected together; circuits or groups of circuits of different voltages above ground should be tested separately. This test should be made at a dc voltage of 500 V for a minimum of 1 min. The recommended minimum insulation resistance Rm for ac and dc machine armature windings and for field windings of ac and dc machines can be determined as follows in Equation (2):

$$Rm = \text{kV} + 1 \tag{2}$$

where

Rm is the recommended minimum insulation resistance in M ohm at 40 °C of the entire machine winding

kV is the rated machine terminal to terminal potential, in rms kilovolts

Copyright © 2002 IEEE. All rights reserved.

Copyright The Institute of Electrical and Electronics Engineers, Inc.
Provided by IHS under license with IEEE
No reproduction or networking permitted without license from IHS
Not for Resale

The actual winding insulation resistance to be used for comparison with the recommended minimum value Rm is the observed insulation resistance, corrected to 40 °C, obtained by applying direct potential to the entire winding for 1 min to obtain the initial value and for 10 min to obtain the value for the polarization index.

The minimum insulation resistance of the field windings of machines separately excited, with voltage less than the rated voltage of the machine, should be not less than 1 MΩ.

13.16 Tests

Prior to delivery, tests should be performed to ensure that the machine is in accordance with these recommendations and operates at its specified rating. When a machine is a duplicate of one already tested, only such check tests need be made as may be necessary to demonstrate that the machine operates successfully. Spare parts should be given a regular insulation resistance test, but need not be given any running test. Tests should be conducted in accordance with the following:

a) For single-phase motors, ANSI/NEMA MG-1-1998
b) For polyphase induction motors, IEEE Std 112-1996
c) For synchronous motors, IEEE Std 115-1995
d) For dc motors, ANSI/NEMA MG-1-1998
e) For IEC motors, IEC 60034
f) For chemical duty motors up to and including 373 kW (500 HP), IEEE Std 841-2001
g) For chemical duty motors above 373kW (500 HP), API Std 541

The tests that should be performed are

— Temperature-rise
— Insulation resistance
— High potential
— Overload
— Commutation test

13.17 Temperature-rise test

After the machines have been run continuously under full load and steady state temperatures have been reached, the temperature rises should not exceed those given in Table 17 or Table 9.

13.18 Insulation resistance test

The insulation resistance test of motor windings should be carried out with the machine at operating temperature and values should be not less than the values in 13.15.

13.19 High-potential test

The dielectric strength of the insulation should be tested by the continuous application for 1 min of an alternating voltage whose value is 1000 V plus twice the rated voltage of the circuit to which the machine is to be connected. The test voltage should be applied between all circuits and ground, between shunt and other field windings, and between brush rings of opposite polarity.

When synchronous motors are to be started with alternating current, the fields should be tested in accordance with the following, depending on the field starting arrangements:

Copyright © 2002 IEEE. All rights reserved.
Copyright The Institute of Electrical and Electronics Engineers, Inc.
Provided by IHS under license with IEEE
No reproduction or networking permitted without license from IHS
Not for Resale

a) Field short-circuited. The field windings should be tested with 10 times the exciter voltage but not less than 2500 V nor more than 5000 V.
b) Field open-circuited and sectionalized. The field windings should be tested with 1.5 times the maximum rms voltage that can occur between the terminals of any section under the specified starting conditions, but not less than 2500 V or 10 times the rated excitation voltage per section, whichever is greater.
c) Field open-circuited and connected all in series. The field windings should be tested with 1.5 times the maximum rms voltage that can occur between the field terminals under the specified starting conditions, but not less than 2500 V or 10 times the rated excitation voltage, whichever is greater.
d) Resistor in series with field. The field windings should be tested with a voltage equal to twice the rms value of the IR drop across the resistor but not less than 2500 V. The IR drop should be taken as the product of the resistance and the current that would circulate in the field winding if short-circuited on itself at the specified starting voltage.

Phase-wound rotors of induction motors should be tested with twice their normal induced voltage plus 1000 V. When induction motors with phase-wound rotors are to be reversed while running at approximately normal speed by reversing the primary connections, the test should be four times the normal induced voltage plus 1000 V.

For fractional horsepower motors (250 V or less) rated 0.37 kW and less, the dielectric strength of the insulation should be tested by the application of alternating voltage whose effective value is 1000 V for 1 min for ac motor tests and 900 V for 1 min for dc motor tests. When fractional horsepower motors are produced in quantities, the high-potential test may be modified to consist of the application of a 20% higher voltage than recommended above (in subclause 13.20) applied for 1 s.

13.20 Overload test

The overload test for motors should be performed at rated speed, or in the case of a motor with a range of speeds, at the highest and lowest speeds. The test should be made with a gradual increase of torque and the appropriate excess torque given in this subclause. Synchronous motors and synchronous induction motors should withstand the excess torque without falling out of synchronism and without adjustment of excitation circuit preset at the value corresponding to rated load, as follows:

— DC motors: 50% for 15 s
— Polyphase ac synchronous motors: 50% for 15 s
— Polyphase ac synchronous induction motors: 35% for 15 s
— Polyphase ac induction motors: 60% for 15 s
— Single-phase ac motors: 33% for 15 s

13.21 Commutation test

The commutation test on dc motors should consist of the application of a momentary torque of 50% in excess of that corresponding to its rating, for 15 s with fixed brush setting. There should be no severe sparking or damage to the commutator or brushes. The commutation of ac commutator motors should be essentially sparkless over the specified range of load and speed.

--`,,-`-`,,`,,`,`,,`---
Copyright © 2002 IEEE. All rights reserved.

Copyright The Institute of Electrical and Electronics Engineers, Inc.
Provided by IHS under license with IEEE
No reproduction or networking permitted without license from IHS
Not for Resale

14. Motor application—general

14.1 General

Motors should be selected for the particular application. Motors should be rated for continuous duty unless used in an application that imposes an intermittent or varying duty.

Generally, motors should be of the dripproof and guarded type, unless an equipment enclosure provides an equivalent degree of protection. Motors subjected to excessive dripping of water or oil should be totally enclosed or watertight. Motors on the open deck should be watertight unless enclosed in watertight housings.

14.1.1 AC motors

Because most applications do not require speed control of the driven load, single-speed squirrel-cage induction motors should be used whenever possible. If speed control is required, consideration should be given to solid-state adjustable speed drive controllers or multispeed squirrel-cage induction motors. The windings may be grouped for series or parallel operation to provide a two-to-one ratio of speeds, or two or more independent windings may be used to provide other ratios of synchronous speeds. A wound-rotor induction motor may also be used with suitable control equipment.

14.1.2 DC motors

For most applications, shunt or stabilized shunt-wound motors should be used. Since shunt field control will readily provide for at least a 10% increase in speed, it is recommended for applications requiring small speed adjustment. If greater speed control is required, armature voltage control, shunt field control, or a combination of both should be utilized.

Because machinery space air can contain oil vapor, consideration should be given to using totally enclosed fan-cooled motors or to piping the ventilating air to enclosed self-ventilated motors to prevent oil accumulation on the windings.

14.1.2.1 Ventilating fan and blower motors

Motors that drive axial flow fans and draw air from, or discharge air to, the open deck should be waterproof.

14.1.2.2 DC motors

Motors for operating ventilating fans and blowers should be of the shunt type. In cases in which the motor speed exceeds 600 r/min, a stabilized shunt motor should be used. Speed control, if provided, should be as described in 14.1.2.

14.1.2.3 Pump motors

Motors for operating close-coupled pumps should be totally enclosed. Alternatively, motors may be drip-proof, with the driving end totally enclosed or designed to prevent liquid from entering the motor.

14.1.2.4 Refrigerated spaces

In general, motors should not be installed in refrigerated spaces. If installed, such as for recirculating fans, special consideration should be given to the effects of condensation.

Copyright © 2002 IEEE. All rights reserved.
Copyright The Institute of Electrical and Electronics Engineers, Inc.
Provided by IHS under license with IEEE
No reproduction or networking permitted without license from IHS
Not for Resale

14.1.2.5 Galley, laundry, workshop, print shop, and similar spaces

Motors for installation in these spaces should be totally enclosed or totally enclosed fan-cooled. Where the enclosing case of the appliance provides equivalent protection, open or dripproof motors may be used.

14.1.2.6 Applications in hazardous locations

See Clause 33 for additional recommendations.

14.1.2.7 Motor-generators

Squirrel-cage or synchronous motors may have the same duty rating as the driven generator.

14.1.2.8 Deck machinery motors

Motors should be waterproof unless located in deckhouses, below deck, or otherwise suitably protected. The following apply to ac and dc motors located in these spaces.

14.1.2.8.1 AC motors

Single or multispeed constant-torque squirrel-cage motors generally provide sufficient speed points for a windlass, winch, or capstan drive. Adjustable speed drive controllers or wound-rotor motors with several types of impedance control may be used if additional speed control is required.

14.1.2.8.2 DC motors

Motors may be stabilized shunt, compound, or series wound. With a warping head, a stabilized shunt or compound-wound motor should be used. Speed control with special operating characteristics is usually required.

14.2 Duty rating

The duty rating required depends on the mechanical configuration of the drive. For indirect drives, such as dc-adjustable voltage drives or electrohydraulic drives, consideration should be given to the fact that the motor driving the motor-generator set or pump will be operating continuously at light load with superimposed intermittent loading.

The minimum duty ratings recommended for windlass, capstan, and winches are as in Table 18.

Table 18—Minimum duty rating for windlass, capstan, and winches

	Windlass	Capstan	Cargo winch	Topping and vang winch
Direct gear	30 min	30 min	30 min	15 min
Direct gear with warping head	30 min var[a]	30 min var[a]	30 min var[a]	—
Indirect (motor driving m-g set or pump)	30 min var[a]	30 min var[a]	30 min var[a]	—

[a]Varying duty comprises operation at light load followed by full load for the specified time period. Boat winches and watertight door operators should have a minimum duty rating of full load for 5 min.

Copyright © 2002 IEEE. All rights reserved.

Copyright The Institute of Electrical and Electronics Engineers, Inc.
Provided by IHS under license with IEEE
No reproduction or networking permitted without license from IHS
Not for Resale

14.3 Steering gear motors

14.3.1 AC motors

For direct-drive steering gears, a wound-rotor motor with a breakdown torque of at least twice the full load torque or a continuously rated squirrel-cage motor with reversible, adjustable speed drive is recommended.

For an indirect-drive steering gear with a dc-adjustable voltage drive or an electrohydraulic drive, the squirrel-cage motor should be rated for continuous operation at 15% of rated load, followed by full load for 1 h.

14.3.2 DC motors

For direct-drive steering gears, a compound-wound motor with a 60-min intermittent duty is recommended. For an indirect-drive steering gear, the motor driving the motor-generator set or pump should be shunt or stabilized shunt wound and have the same 60-min varying duty rating as the ac motor as given in 14.3.1.

15. Brakes

15.1 Types

Brakes may be of the shoe, band, or disk type, and they may be mounted separately or attached to the motor.

15.2 AC brakes

All ac brakes should be wound for the motor supply voltage and frequency.

15.3 DC brakes

All dc brakes should be insulated for the same voltage as that of the motors for which they are used. The brake winding may be series or shunt type as desired. Series-wound brakes should be designed to release down to at least 40% full load current and in every case on the starting current, and to set at not more than 10% full load current. Shunt-wound brakes should operate satisfactorily at 80% rated voltage at maximum working temperature, and the construction or protection should be such that the windings will not be damaged by inductive discharge. Shunt coils may have an external series and discharge resistance.

15.4 Accessibility

Shoe-type brakes should permit the removal of the brake shoes and brake wheel without the removal of the magnet, magnet housing, brake base, or without disturbing the base alignment of the brake. Disk-type brakes should permit the removal of the brake housing away from the motor or the motor away from the brake housing. The construction of the brake should be such that exact alignment of the shoe or disk with the centerline of the armature is not necessary.

15.5 Enclosures

The electric operating portion and the mechanical portion (wheel, shoes, etc.) of the brake may be open, dripproof, or waterproof as required for the application.

Copyright © 2002 IEEE. All rights reserved.
Copyright The Institute of Electrical and Electronics Engineers, Inc.
Provided by IHS under license with IEEE
No reproduction or networking permitted without license from IHS
Not for Resale

15.5.1 Open type

A shield should be provided over the mechanical portion for safety and protection. Brake coil housings should be dripproof or watertight. Brake coil housings of the waterproof type, if provided with drain plugs, should carry a CAUTION plate advising personnel not to drain when hot. The waterproof housing should be arranged for drilling and tapping to suit kick pipe or stuffing tubes.

15.5.2 Dripproof enclosed

A dripproof enclosure covering the entire brake should be provided.

15.5.3 Waterproof enclosed

A substantial waterproof housing should be provided to enclose all parts of the brake. Shaft seals should be included.

15.6 Construction

All bolts, nuts, pins, screws, terminals, springs, and so on should be of corrosion-resistant material or steel suitably protected against corrosion. Steel springs should be treated to resist moisture in such a manner as not to impair their spring quality.

All bolts, nuts, pins, screws, terminals, springs, and so on should be of corrosion-resistant material or steel suitably protected against corrosion. Steel springs should be treated to resist moisture in such a manner as not to impair the spring quality. A nameplate providing the following data should be mounted conspicuously on the brake:

a) Marine (name of apparatus)
b) Name of manufacturer
c) Type
d) Frame
e) Voltage
f) Armature travel
g) Torque
h) Spring compression
i) Rating (time)
j) Serial number
k) Coil specification number
l) Inrush current (ac only)
m) Frequency (ac only)
n) Number of phases (ac only)
o) Maximum continuous current (dc only)
p) Series or shunt (dc only)

15.7 Tests

Tests should be performed prior to delivery to ensure that the brake is in accordance with these recommendations. When a brake is a duplicate of one already tested, only such tests need be made that are necessary to demonstrate that the brake operates successfully. Spare coils should be given regular high-potential tests as described in 13.19. Other spare parts need not be tested in the entire assembled form. Temperature rise for coils need not be tested in the entire assembled form. Tests for waterproofness should be of the same nature as those for the motor, to which the brake is attached. Temperature and insulation tests should be made in accordance with 13.17 and 13.18. Spare coils for ac brakes should be tested for short-circuited turns.

Copyright © 2002 IEEE. All rights reserved.

Copyright The Institute of Electrical and Electronics Engineers, Inc.
Provided by IHS under license with IEEE
No reproduction or networking permitted without license from IHS
Not for Resale

15.8 Brake application

Brake coils for intermittent rated motors should not overheat when energized for the time rating of the motor to which they are connected. Continuously rated coils should be capable of operation continuously at rated voltage and current.

Brakes should have a torque rating equivalent to the torque rating of the motors to which they are attached. Brake magnets should not be noisy when the armature is seated against the core. DC brakes may be used with power supplied from ac/dc rectifiers.

16. Magnetic friction clutches

16.1 General

Magnetic friction clutches should be insulated for the same voltage as that of the motors or other electric equipment with which they will be used. Magnetic clutches consist of two sections, one containing the magnetic winding and the other a steel disk or faceplate that forms the armature of the magnet. When current is passed through the winding, the clutch becomes engaged; when the circuit is opened, the clutch becomes disengaged. The disengagement should be assisted by a spring plate or springs, and when disengaged, the two sections should stand a short distance apart with a positive running clearance. The usual type of clutch provides direct magnet action, the magnet being located so that its direct pull produces the pressure between the friction surfaces on the magnet and armature. The engagement of the clutch members, when the coil is energized, should be smooth and positive. The clutch should have the pressure between the members balanced within the clutch so that there is no end thrust. Magnetic clutches should be accurately balanced at operating speeds.

The friction lining and magnet coil should be readily accessible without disturbing either the driving or the driven shaft. Suitable means for adjustment of the friction surface should be provided.

All small parts should be protected against corrosion as recommended for motors. Collector rings for current supply to the clutch should be of noncorroding material. Double-brush contacts should preferably be supplied to ensure positive contact at all times.

A nameplate should be provided giving the following data:

a) Marine (name of apparatus)
b) Name of manufacturer
c) Type
d) Voltage
e) Maximum continuous current
f) Torque
g) Serial number
h) Normal revolutions per minute

16.2 Tests

Tests should be made prior to shipment for balance, temperature rise, and dielectric strength, in accordance with Clause 13. The temperature rise should conform to Table 9 with the clutch stationary. The clutch should develop its rated torque under normal conditions without slipping.

Copyright © 2002 IEEE. All rights reserved.
Copyright The Institute of Electrical and Electronics Engineers, Inc.
Provided by IHS under license with IEEE
No reproduction or networking permitted without license from IHS
Not for Resale

17. Distribution equipment

17.1 Distribution panels

Distribution panel components, such as enclosing cases, cabinets, latches, locks, and so on, should be constructed of corrosion-resistant materials.

Electrical creepage and clearances should be in accordance with a nationally recognized standard.

All parts of distribution panel interior fittings should be renewable without removing the distribution panel's insulating base. Circuit breaker elements of unit type construction may be used to build a distribution panel unit.

Each outgoing circuit should have a suitable nameplate. Where there is insufficient space adjacent to the branch circuit breaker for a nameplate, then each circuit should be numbered and a directory list attached to the inside of the door.

Distribution panels for motor, appliance, lighting (including emergency), and other branch circuits should utilize multipole circuit breakers or fused switches. These overcurrent protective devices should provide overload protection for each ungrounded conductor in each branch circuit. Circuit breakers in grounded neutral distribution panels may include a pole to simultaneously switch the neutral. The number of branch circuits controlled by a single distribution panel should not exceed 18 for three-phase ac branches and 26 for single-phase ac or two-wire dc branches. The wiring space within each enclosure should be of sufficient size to avoid conductor overcrowding and to ensure adequate ventilation. All circuit breakers and fusible switches for motor starting and stopping should have horsepower ratings that meet a nationally recognized standard.

For three-phase distribution panels, buses and primary connections should be arranged such that the phase sequence is A, B, and C. For dc distribution panels, the polarities are positive, neutral, and negative front to back, top to bottom, and left to right, as viewed from the front of the panel. A distribution panel cabinet or enclosing case that is accessible to passengers should be provided with a lock. Dead-front type distribution panels should be used.

Distribution panels should have a degree of enclosure appropriate for the installation location.

Watertight distribution panel cabinets should be cast or welded construction with external mounting lugs and externally operable switches. Suitable terminators should be provided for all cables for watertight distribution panels and for cables entering the top of dripproof distributions panels, which may allow condensation or other moisture to drip into the enclosing case or cabinet. Suitable bushings or clamps should be used when cables enter the bottom and sides of dripproof enclosures.

17.2 Circuit breakers

Circuit breakers should meet other national or international requirements and be tested or certified by a nationally recognized independent testing laboratory as suitable for shipboard applications.

17.3 Wire lugs and connectors

All lugs should be of the solderless type and should provide adequate contact area and pressure to provide good contact, low-voltage drop, low-temperature rise, and mechanical strength to resist pullout and withstand shipboard vibration.

Copyright © 2002 IEEE. All rights reserved.

Copyright The Institute of Electrical and Electronics Engineers, Inc.
Provided by IHS under license with IEEE
No reproduction or networking permitted without license from IHS
Not for Resale

All pressure type connectors and lugs should conform to UL 486A-1991, or another nationally recognized standard.

If soldering lugs are used, they should have a solder contact length a minimum of 1.5 times the diameter of the conductor.

Tongues should be suitable for the intended application with the contact surface having a suitable finish and adequate area. If the location of soldering lugs is such that any misalignment could result in a short-circuit or ground fault, then the lug should have two screw holes or otherwise be adequately secured against turning.

If soldering lugs are attached to studs, busbars, and so on that have silver-plated contact areas, the contact area of the lug should also be silver-plated.

17.4 Feeder box fittings

Feeder box fittings may be of two types. One type of feeder box fitting does not require severing the feeder. The other type of feeder box fitting utilizes terminal blocks, which are arranged to attach the branch circuit and the two sections of the severed feeder by lugs conforming to the requirements of 17.3.

17.5 Branch box fittings

Branch box fittings should be provided with bases constructed of flame-retarding and moisture-resistant insulating material. Connections should be provided with spring washers to retain the wires, or connection plates should be provided with upturned lugs or confining walls to retain the wires. Screw holes for securing fittings should not penetrate the enclosure of waterproof boxes.

17.6 Connection box fittings

Connection box fittings should be provided with insulating bases that are designed for connecting wire lugs or terminals conforming to the requirements of 17.3. When providing connections for different voltages in one connection box, the connections for each voltage group should be separated by a barrier and the voltage of each group of terminals should be indicated on the connection box.

17.7 Shore connection boxes

Shore connection boxes should comply with the following:

a) Connection boxes mounted in exposed locations on the weather deck shall have portable cable connection capability utilizing watertight multipole power receptacles or protected terminals.
b) The terminals should be properly sized and shaped to facilitate satisfactory connections.
c) There should be phase sequence marking for the terminals for three-phase ac system portable cables.
d) Terminals should be polarity marked for dc system portable cables.
e) There should be an instruction plate, or sheet, providing essential information on the ship's electrical supply system and connection requirements.
f) Connection boxes should have provisions for bottom entrance of portable cables.
g) Connection boxes should be designed to prevent moisture or water entrance via the top or sides of the enclosure.

Copyright © 2002 IEEE. All rights reserved.
Copyright The Institute of Electrical and Electronics Engineers, Inc.
Provided by IHS under license with IEEE
No reproduction or networking permitted without license from IHS
Not for Resale

17.8 Feeder, branch, and connection boxes

17.8.1 General

Feeder, branch, and connection boxes should generally be constructed of the following materials:

a) Cast brass
b) Bronze
c) Malleable iron
d) Welded iron
e) Welded sheet steel with corrosive-resistant finish
f) Pressed sheet brass
g) Molded composition

17.8.2 Boxes exposed to weather

Boxes mounted in locations exposed to the weather should be constructed of the following materials:

a) Brass
b) Bronze
c) Molded composition
d) Other suitable corrosion-resistant materials

17.8.3 Molded composition boxes

Molded composition boxes should be made of flame-retardant material in accordance with ASTM D229-96. This material should also be impervious to oil, moisture, and ultraviolet radiation. The boxes should have mechanical performance characteristics similar to comparable metallic enclosures.

17.8.4 Minimum box wall thickness

Feeder, branch, and connection boxes should be constructed with minimum box wall thickness as follows:

a) For brass and bronze boxes: 2.4 mm
b) For malleable iron and molded composition boxes: 3.2 mm
c) For welded iron and welded sheet steel: 1.6 mm
d) For pressed sheet brass: 1.98 mm

17.8.5 Tolerances between box and fittings

Metallic boxes should provide an air gap as follows between live fittings and the box or cover, unless an insulating barrier is used:

a) For 125 V or less: 12.7-mm creepage and 6.35 mm
b) For 126 V to 600 V inclusive: 6.35-mm air gap

17.8.6 Stuffing tube bosses/pads

The minimum thickness for stuffing tube bosses or pads should be as follows, excluding wall thickness of the box:

a) For molded composition and cast boxes: 6.35 mm
b) For sheet boxes: 3.17 mm

Copyright © 2002 IEEE. All rights reserved.

Copyright The Institute of Electrical and Electronics Engineers, Inc.
Provided by IHS under license with IEEE
No reproduction or networking permitted without license from IHS
Not for Resale

Where nonmetallic cable hubs or seals are fitted in molded composition boxes, no bosses or pads need be provided.

17.8.7 Box covers

Box covers should have a minimum cover thickness as follows:

a) For cast and molded composition boxes: 3.17 mm thick
b) For all other boxes: 1.6 mm thick

Box covers should be secured with screws of corrosion-resistant material as follows:

— For screw cap covers: Screws should have U.S. Standard threads, 12 per inch or metric equivalent.
— For covers other than screw cap covers: Screws should be at a minimum No. 10 gauge, 24 threads per inch or metric equivalent.

Covers for watertight boxes should be fitted with gaskets that are thick enough for the application and secured such that a continuous seating and uniform compression of the gasket is ensured.

17.8.8 Watertight boxes

Watertight boxes should be provided with external mounting feet. No mounting holes should penetrate the enclosure.

17.8.9 Box locations

Nonwatertight feeder, branch, and connection boxes may be used in the following locations:

a) Chart room
b) Navigating bridge
c) Radio room
d) Gyro room
e) Accommodation spaces
f) Pantries
g) Passageways adjacent to accommodation spaces
h) Public washrooms and toilets not equipped with baths or showers

Nonwatertight feeder, branch, and connection boxes should not be installed within 3 m of weather deck doors or access openings to the weather where the openings are not protected by an overhead deck that extends the full width of the weather deck to which the doors or openings lead. These boxes may be installed within 3 m of weather deck doors or access openings, if the boxes are concealed in fire-resisting joiner panels. In all other spaces, feeder, branch, and connection boxes should be watertight as required by the location. The integrity of these enclosures should be as defined in 3.7.

17.9 Receptacles, plugs, and switches—nonwatertight

17.9.1 General

Nonwatertight receptacles, plugs, and switches should meet to the following standards:

a) Nonwatertight receptacles, plugs, and switches should be of rugged construction.
b) They should be capable of withstanding rough treatment and usage.

Copyright © 2002 IEEE. All rights reserved.
Copyright The Institute of Electrical and Electronics Engineers, Inc.
Provided by IHS under license with IEEE
No reproduction or networking permitted without license from IHS
Not for Resale

Nonwatertight receptacle, plug, and switch enclosures should conform to all applicable requirements of 17.8.

Receptacles and switches should have sufficient contact surface and meet all tests and requirements set by a nationally recognized independent testing laboratory.

17.9.2 Receptacles

All receptacles should meet the following grounding requirements:

a) Provide an extra pole or contact grounded to the enclosure
b) Allow extension of safety circuit or ground connection through supplementary contact in the plug to portable equipment casing

The receptacle body supporting current-carrying contacts and terminals should be constructed of flame-resisting and moisture-resistant insulating material. There should be a barrier separating current-carrying parts.

NOTE—Porcelain is not recommended as a barrier for current-carrying components.

All current-carrying components should meet requirements set by a nationally recognized independent testing laboratory.

Receptacles and plugs of different electrical ratings should not be interchangeable, as stated in standards promulgated by a nationally recognized independent testing laboratory.

17.9.3 Plugs

Plugs should meet the following recommendations:

a) They should conform to all applicable receptacle requirements.
b) Plug connections should be made in such a manner that no strain is transmitted to terminals and contacts.
c) Plugs should be designed such that when in place, they are held in positive contact regardless of vibration level.
d) All portable equipment plugs should be a type that grips the cord, except for the following equipment:
    1) Desk, table, and floor lamps
    2) Bracket fans used in staterooms and living quarters

17.9.4 Switches

Switches should meet the following requirements:

a) They should be reciprocating or toggle-type switches.
b) They should be of the quick make-and-break action type.
c) They should have a self-evident position indication.

17.9.5 Connections

Connections for all plugs, receptacles, and switches should be as follows:

a) For more than 30 A: Provided with lugs for connecting conductors.

Copyright © 2002 IEEE. All rights reserved.

Copyright The Institute of Electrical and Electronics Engineers, Inc.
Provided by IHS under license with IEEE
No reproduction or networking permitted without license from IHS Not for Resale

b) For 30 A or less: Conductors may be held by a binding screw and provided with means for confining the wire.

When receptacles are incorporated as part of a fixture, the receptacle should be a type that has a nationally recognized independent testing laboratory approval, with no restrictions, for the use of any nationally recognized independent testing laboratory approved attachment plug. However, when the receptacle does not have a nationally recognized independent testing laboratory approval rating, then the receptacle should be mounted on a nonconducting surface, or an insulating shield, to effect an insulated area large enough to permit the use of any nationally recognized independent testing laboratory approved attachment plug.

17.9.6 Locations

Nonwatertight receptacles, plugs, and switches may be used in the following locations:

a) Chart room
b) Navigating bridge
c) Radio room
d) Gyro room
e) Accommodation spaces
f) Pantries
g) Passageways adjacent to accommodation spaces
h) Public washrooms and toilets not equipped with baths or showers

Nonwatertight receptacles, plugs, and switches should not be installed within 3 m of weather deck doors or access openings to the weather, where the openings are not protected by an overhead deck that extends the full width of the weather deck to which the doors or openings lead, unless the junction boxes for this equipment are concealed in fire-resisting joiner work panels.

17.10 Receptacles, plugs, and switches other than nonwatertight

17.10.1 General

Enclosures for other than nonwatertight receptacles, plugs, and switches should be watertight, submersible, or explosionproof depending on location and as defined in 3.7. The enclosures should conform to all applicable requirements of 17.8. Additionally, receptacle enclosures should be designed so that with plugs removed, they can be made to meet the requirements for degree of enclosure.

17.10.2 Connections

All devices should conform to all applicable requirements of 17.9. All receptacles should be a polarized type and designed not to accommodate existing nongrounded plugs. All receptacle plugs should be designed such that, when in place, they are held in positive contact and establish and maintain the required degree of enclosure.

Where threaded caps are used to seal off receptacle openings, they should be mechanically fastened to the cover, or enclosure, by a strong link or hinged strap. Bead chains should not be used for this purpose.

17.10.3 Location

Watertight receptacles, plugs, and switches should be used in all spaces where nonwatertight units are not applicable, except where either explosionproof or submersible units are required. Watertight units may be used in any location where nonwatertight units are permitted.

Copyright © 2002 IEEE. All rights reserved.
Copyright The Institute of Electrical and Electronics Engineers, Inc.
Provided by IHS under license with IEEE
No reproduction or networking permitted without license from IHS
Not for Resale

For areas where explosionproof enclosures are recommended, see Clause 33. Explosionproof receptacles should have interlocked explosionproof switches or should be otherwise arranged to avoid an explosion hazard when the plug is inserted or withdrawn. Explosionproof switches should have poles that are arranged to break all current-carrying legs of the circuit. The installation of switches or receptacles in areas subject to an explosion hazard should be avoided when possible.

Submersible units may be required in certain applications due to special or unusual locations.

17.11 Terminal and stuffing tubes

Terminal tubes should consist of nonferrous material. Where terminal tubes are installed in contact with dissimilar metals except steel, precautions should be taken to prevent electrolytic action. Terminal tubes should be machined with a standard pipe thread and designed to receive a flanged nut or gland nut. The flange nut and gland nut, when screwed into the tube body, should force a loose collar or gland ring against suitable watertight packing and provide a watertight joint.

Bulkhead tubes should conform to the recommendations listed in this subclause except that the body may be constructed of steel. In addition, the tube body or bulkhead tube should have a nipple of sufficient length to pass through the bulkhead with room for a gasket and lock nut to secure a watertight joint through the bulkhead. If the nipple is constructed of steel and designed accordingly, it may be welded to the bulkhead to secure the watertight joint.

Deck-stuffing tubes should be provided with a nut on each side or should be designed specially for welding to the deck.

17.12 Multicable penetrators

The surrounding frame of a multicable penetrator should consist of metal compatible with the metal of the bulkhead, deck, or equipment enclosure to which it is attached. Materials that compose the fitting and seal should not induce electrolysis or cause deterioration of the cable, armor, or cable sheath in any way.

17.13 Bolts, taps, and so on

All bolts, taps, and threads used in the construction and installation should be U.S. Standard size, metric, or a recognized standard of special thread.

17.14 Power factor correction capacitors

Power factor correction capacitors may be used in limited shipboard applications to improve a system power factor. This reduces the kilovoltamperes required to supply a given kilowatt load. Power factor correction capacitors may be directly connected to the circuit or connected by means of contactors.

Installation of power factor correction capacitors should not raise the system power factor at the minimum generator load condition above 0.9 lagging. Generator regulator instability may occur at power factors above this level. The installation of power factor correction capacitors causes increased harmonic currents, often requiring increases in cable size, circuit breaker, and contactor rating. In general, cables and circuit breakers should be sized for at least 135% of the rated capacitor load.

Excessive capacitor current will flow when capacitors are connected to solid-state motor controllers, because of silicon control rectifier (SCR) line notching; so power factor correction capacitors should not be

Copyright © 2002 IEEE. All rights reserved.

Copyright The Institute of Electrical and Electronics Engineers, Inc.
Provided by IHS under license with IEEE
No reproduction or networking permitted without license from IHS
Not for Resale

installed without isolation transformers. Undesirable ground current will flow if the capacitors are directly connected to ungrounded power systems.

18. Heating equipment

18.1 General

18.1.1 Construction

Heaters should be designed and constructed to heat the surrounding air by convection. They may be blower type design, where air is forced through the heating element by a fan integral to the heating unit. Heaters should be certified to UL 1042-1994, UL 1278-2000, and UL 2021-1997, as applicable. Heaters in accommodation, machinery, and service spaces should meet the following requirements in Table 19.

Table 19—Heater voltage and power requirements

Location	Max rating (V)
Accommodation spaces (bulkhead mounted)	240
Machinery and service spaces	575

Power requirements	Number of heating elements
1500 W or less	1
Above 1500 W	2 or more

Heater construction should be strong and durable, with all parts solidly built to withstand vibration under service conditions. The framework should be of substantially proportioned metal, with parts securely fastened together. Heaters should have nonflammable insulating material, or adequate air circulation, between the heater and the mounting surface or between the heater and adjacent surfaces. Portable heaters should have a suitable clip or bracket fitted to retain the heater in a fixed position.

Heaters mounted on or adjacent to decks or bulkheads should be protected by perforated or expanded metal coverings or the equivalent. The ends, back, and top of these heaters may be solid material.

Heaters with exposed surfaces mounted flush with bulkheads should protect the elements with a screen or guard of perforated or expanded metal. The remaining sides of these heaters should be protected by a solid metal enclosure designed to meet recommended temperature limitations in 18.2.

Heaters mounted on bulkheads should have the heater top slanted or otherwise designed to prevent the hanging of towels or similar flammable material on the heater. The protecting guard should be strong enough to resist being forced against current-carrying parts and to provide protection against electrical or mechanical injury. The heater openings should be sized small enough to prevent heating elements from

Copyright © 2002 IEEE. All rights reserved.
Copyright The Institute of Electrical and Electronics Engineers, Inc.
Provided by IHS under license with IEEE
No reproduction or networking permitted without license from IHS
Not for Resale

being short-circuited or damaged by accident. All metal parts of the heater should be suitably protected against corrosion.

18.1.2 Heating elements

Heating elements should be of the enclosed type with the element jacket constructed of corrosion-resistant material. Heating elements should utilize uniform units, easily installed and replaced. The heating element material should not corrode or oxidize. Alloys containing zinc are not recommended for this purpose. Heating elements should not be constructed of flammable material. All heating element connections should be accessible and designed so that they will not loosen due to vibration. Heating element supports should be wired to a terminal block with the connectors and leads brought out through insulating bushings. All insulating parts should be unaffected by heat from the heating elements.

18.1.3 Control switches

A suitable regulating switch mounted on an approved insulating base should be provided. Heaters should be equipped with manual reset type thermal cutouts to prevent overheating of the elements. Thermostatically controlled contactors should be provided for multistage heaters.

18.2 Temperature and tests

Heater enclosure case temperatures should not exceed that shown in Table 20.

Table 20—Heater case temperatures

Type heater	Maximum enclosure case temperature (°C)
Flush type	90
All others	125
NOTE—Reduction in surface temperature in compliance with UL 2021.	

When heaters are mounted on, or adjacent to, a deck or bulkhead, heater construction should prevent the nearest deck or bulkhead surface from exceeding 55 °C. For test purposes, an ambient temperature of 25 °C should be used. The heater, when hot, should withstand the application of 1000 V ac, 60 Hz, for 1 min between the frame and current-carrying parts.

18.3 Nameplates

Every heater should have a nameplate attached inscribed with the following data:

a) Marine (name of apparatus)
b) Name of manufacturer
c) Type
d) Voltage
e) Amperes
f) Watts
g) Model and serial number

Copyright © 2002 IEEE. All rights reserved.

Copyright The Institute of Electrical and Electronics Engineers, Inc.
Provided by IHS under license with IEEE
No reproduction or networking permitted without license from IHS
Not for Resale

19. Galley equipment

19.1 Electric cooking equipment

19.1.1 Construction

All electric cooking equipment, attachments, and devices should be of rugged construction and designed to permit complete cleaning, maintenance, and repair. All servicing should be possible from the front or top without moving the equipment. Range, grill, oven, broiler, and griddle units should be sectional. Equipment should be rigid and self-supporting. Joints between equipment sections should be bolted. Equipment should be certified to UL 197-1993, or the equivalent shipboard equipment requirements of a nationally recognized testing laboratory.

All external surfaces of cooking equipment, exclusive of cooking tops, should be thermally insulated to improve efficiency and reduce the burn hazard to personnel. Electric cooking appliances should be constructed so that parts that must be handled cannot become heated to a temperature exceeding the values given in Table 21.

Table 21—Temperature limits for noncooking surfaces on cooking equipment

Handles, grips, and so on, made of	Maximum temperature during normal use held in hand (°C)	
	For long periods	For short periods
Metal	55	60
Porcelain and vitreous material, molded material, rubber, or wood	65	70

Higher temperatures may be acceptable for parts that normally will not be handled with unprotected hands, such as handles of drawers for spilled liquid in cooking ranges.

All component parts should be made of corrosion-resistant material, or they should be adequately protected against corrosion. Unit exteriors should be stainless steel, or they should have baked enamel, or other corrosion-resistant finish. Chrome nickel stainless steel is preferred for cleanliness and maintenance. Oven linings should be chrome nickel stainless steel or aluminized steel.

Doors on electric cooking equipment should be equipped with heavy duty hinges and a locking device to prevent door opening in a heavy sea. Grab rails should be provided on the front of cooking equipment for use by the crew in heavy seas.

Portable cooking appliances should be weighted or shaped so that they cannot easily overturn.

19.1.2 Mounting

If the unit is to be platform mounted, the platform edges should not extend beyond the unit and a base should be provided that prevents the accumulation of foreign matter. All equipment should be mounted to prevent dislodgment by rolling or pitching.

Copyright © 2002 IEEE. All rights reserved.
Copyright The Institute of Electrical and Electronics Engineers, Inc.
Provided by IHS under license with IEEE
No reproduction or networking permitted without license from IHS
Not for Resale

19.1.3 Electric power

Electric cooking equipment should be designed to operate on a standard voltage, not in excess of 600 V, single or three phase. The individual phase loads of the heating elements in ac cooking equipment should be given on the equipment wiring diagram to facilitate adjustment of the overall galley phase balance. Non-current-carrying metal parts of cooking equipment should be suitably grounded.

19.1.4 Heating elements

All heating elements should be of the metal-clad enclosed type. No open and exposed resistance wire should be used. Porcelain may be used to seal the end of a sealed unit and to obtain proper creepage distances on the unit terminal. There should be a positive locking device to prevent element loosening due to vibration.

19.1.5 Wiring

For ranges, ovens, and broilers built as independent units, wiring between the terminal blocks of the unit and the terminal blocks of the switchbox should have tinned stranded copper conductors and Class H insulation. Type MI cable also may be used for connections between appliance and switch box.

All wiring should be adequately supported and protected from mechanical damage.

19.1.6 Controls

All controls for ranges, ovens, and broilers, excluding thermostats, should be mounted in a separate drip-proof switchbox located on or adjacent to the unit. The section of the switchbox that covers contactors should be hinged and equipped with a locking device. Other front access panels should be secured with screws to prevent accidental opening. Connections for external wiring should be made at suitably identified terminal blocks. A switchbox located on the unit should be insulated and ventilated to prevent damage to any of the controls or wiring.

Controls for fry kettles and griddles may be located on the units or on a remote control panel. When located on the unit, they should be as far from sources of heat as possible, protected against spillage and grease, and accessible with a minimum of disassembly. Fry kettle controls should be located in positions where the user does not have to reach over the cooking area to operate a control device. If controls for fry kettles and griddles are remotely located, they should be similar to those described for ranges.

The type of control and the temperature range for various appliances should conform to the guidelines of Table 22.

Table 22—Type of control and temperature range for appliances

Service	Temperature range (°C)
Rangetop griddles	
Indicating 3 heat switch or thermostat with OFF position Range Top hotplates	90–230
Indicating 3 heat switch or thermostat with OFF position Range griddle-hotplates	110–480
Indicating 3 heat switch or thermostat with OFF position Range over compartment	110–480

Copyright © 2002 IEEE. All rights reserved.

Copyright The Institute of Electrical and Electronics Engineers, Inc.
Provided by IHS under license with IEEE
No reproduction or networking permitted without license from IHS
Not for Resale

Table 22—Type of control and temperature range for appliances *(continued)*

Service	Temperature range (°C)
Thermostat and separate indicating 3 heat switch for both upper and lower units	90–260
Range oven broiler	
Top unit 3 heat switch	90–230
Fry kettle	
Indicating reversible switch and thermostat	90–230
Griddle	
Thermostat with OFF position or 3 heat switch	90–230

Thermostats for ranges should be mounted on the units and be adequately protected against spillage, grease, and mechanical injury. An automatic temperature control should be located on the unit in a position accessible for setting by the operator. The contactors controlling the power supply to the heating element should be located in the control panel. Broilers built as independent units (that are not combined with range type ovens) need not be furnished with thermostats.

Switches for ac service should be rated at not less than 30 A.

A temperature-regulating thermostat whose failure will not result in a fire hazard should be capable of operating for a minimum of 30 000 cycles under full load. A combination temperature regulating and limiting thermostat that serves to prevent a fire hazard under abnormal operating conditions should be capable of operating a minimum of 100 000 cycles.

Rotary switches for operation with dc power should be capable of at least 50 cycles of operation at 125% of rated current, at rated voltage, and 6000 cycles of operation in each direction at rated current and voltage, without failure. Switches controlling relays and other similar functions should have a continuous rating at least equal to the circuit load.

Control circuits should be protected in accordance with 10.1.

Where the power input voltage is over 250 V ac and a lower control voltage is required, control power should be derived internal to the circuit. The control circuit should be deenergized when the power circuit is opened.

19.1.7 Range tops and griddles

To ensure positive grease collection, drip pans should be fitted under, and should project out from, the cooking surfaces, or the cooking surfaces should be equipped with grease deflecting baffles. Any spillage from the drip pan due to rough seas or handling should drain out the front of the unit. The unit should be designed so that spillage cannot flow to any place where it cannot be readily removed. Adequate drip pan drainage should be provided. Ranges should be provided with sea rails with adjustable barriers to prevent cook pot movement.

Griddles may have either heat selection switches or automatic temperature controls but need not be provided with both.

Copyright © 2002 IEEE. All rights reserved.
Copyright The Institute of Electrical and Electronics Engineers, Inc.
Provided by IHS under license with IEEE
No reproduction or networking permitted without license from IHS
Not for Resale

Heating elements should be removable from the top or front of the appliance without disassembly of the units.

19.1.8 Ovens and broilers

Each section should be independently operated with provision for controlling the amount of top and bottom heat. Broilers should be designed to permit stacking one above the other on a cabinet base or an oven. Back-shelf broilers should be designed to permit mounting on the rear of a range and should have at least 75-mm movement of controlled adjustable griddle height, where three heat switches are used.

Heating elements should be removable from the front without disassembly of the unit.

Broilers should be provided with rugged, movable grids, each provided with a counterbalanced means to vary the grid height approximately 150 cm, where heat selection switches are used and a positive stop to retain the grid at the desired height is provided. Where automatic temperature controls are provided, stationary grids with a positive stop should be provided. A removable drip pan should be installed beneath the grid. A second drip pan should be installed at the bottom of the broiler compartment for positive grease collection and easy removal.

19.1.9 Fry kettles

A fry kettle unit may be a sectional (body, legs, and fat container) or a one-piece design. The fat container should be fabricated from corrosion-resistant material and should have adequate capacity to accommodate foaming. The bottom of the fat container should drain toward the center and should have a minimum 25-mm diameter drain pipe with block valve, arranged to provide straight through drainage with minimum clogging.

Fry kettle fat containers having a weight, when full, of 11 kg or more should not be movable manually but should be provided with a drain pipe and valve for grease drainage.

The heating elements should be controlled by an indicating reversible switch and thermostat and be removable from either the top or front of the fry kettle unit with a minimum of disassembly.

19.2 Testing

Cooking appliances, including their control equipment, should be tested at the manufacturer’s facility.

For portable appliances, the leakage current should not exceed 1 mA, and for stationary appliances, 1 mA or 1 mA per kW rated input, whichever is the larger, for each heating element that can be switched off separately.

19.3 Motor-driven equipment

Motor-driven equipment, such as dough mixers, meat grinders, and potato peelers, should be rigidly constructed and self-supporting. All component parts should be made of corrosion-resistant material or should be adequately protected against corrosion. All equipment should be designed for easy cleaning and servicing from the front.

Motor-driven appliances should be certified to UL 73-1993, UL 471-195 (Refrigerators), UL 921-1992 (Dishwashers), and UL 399-1993 (Water Coolers), as applicable.

Motors and controls for motor-operated appliances located in damp or wet locations should, where practical, be watertight or placed in watertight enclosures. Controls should be of heavy-duty construction. Where it is

--`,,`-`-`,,`,,`,`,,`---
Copyright © 2002 IEEE. All rights reserved.

Copyright The Institute of Electrical and Electronics Engineers, Inc.
Provided by IHS under license with IEEE
No reproduction or networking permitted without license from IHS
Not for Resale

impractical to obtain appliances with watertight motors and controls, appliances with standard commercial motors and control enclosures may be used.

19.4 Nameplates

Every appliance should have a nameplate attached inscribed with the following data:

a) Manufacturer's name and address
b) Equipment model designation
c) Red voltage(s)
d) Current
e) Number of phases
f) Frequency

20. Lighting equipment

20.1 General

Each interior lighting fixture not located in a wet or damp location should be certified to UL 153-2002, UL 924-1995, UL 1570-1995, UL 1571-1995, UL 1572-1995, and UL 1598-2000, as applicable. Additionally, exterior lighting and interior lighting in a wet/damp location should be certified to UL 595-1985, UL 924-1995, UL 1570-1995, UL 1571-1995, UL 1572-1995, and UL 1598-2000, as applicable. See Clause 33 for guidance on lighting fixtures in hazardous locations.

No fixture should be used as a connection box for a circuit other than the branch circuit supplying the fixture.

Watertight lighting fixtures should be utilized when located in the following areas:

— In the weather
— Mounted exposed to splashing water
— Refrigerated compartments
— Chain lockers (when permanently illuminated)

Each fixture mounted in a damp location should at least be dripproof.

Fixtures should be ruggedly constructed and not susceptible to component loosening due to vibration. Incandescent dome fixtures should be ventilated and designed so that none of the surrounding material is directly exposed to the heat of the lamps.

Each fixture and lampholder should be permanently installed. Each pendant-type fixture should be suspended by and supplied through a threaded, rigid conduit stem. Each table lamp, desk lamp, floor lamp, and similar fixture should be secured in place so that it cannot be displaced by the roll or pitch of the vessel.

Exterior lighting should not interfere with required navigational lighting and should not impair night vision from the navigating bridge.

Copyright © 2002 IEEE. All rights reserved.
Copyright The Institute of Electrical and Electronics Engineers, Inc.
Provided by IHS under license with IEEE
No reproduction or networking permitted without license from IHS
Not for Resale

20.2 Location

The preferred location for fixtures for general lighting is on the overhead, except where decorative lighting is desired for special effects. The fixtures should be located for maximum protection. When located on bulkheads, they should be approximately 1.8 m above the deck.

An indicator light should be installed outside each refrigerated space to show when lights in the refrigerated space are energized.

20.3 Provisions for portable lighting

Receptacles for portable lights and similar equipment should be provided in or near chain lockers, deck machinery, steering gear, machinery spaces, shaft alleys, refrigeration spaces, and similar locations. Receptacles located where they could be exposed to moisture should be watertight. Nonwatertight receptacles may be used in baggage rooms, mailrooms, deck lockers, storerooms, passenger and crew accommodations, deck fan rooms, and similar places. Portable lights should not be used for built-in berths. Lights on beds or other furniture connected by portable cable should have the cable secured to the furniture to reduce the amount of loose cable to a minimum.

20.3.1 Portable lights, including desk lights

Means should be provided to effectively ground all external metal parts.

20.4 Permanent watertight fixtures

Watertight fixtures installed in outside spaces should be constructed of corrosion-resistant material or have a corrosion resistant finish. The globe should be protected by a suitable guard. Watertight fixtures installed in inside spaces may have the junction box that forms a part of the fixture constructed of material suitably protected against corrosion, but the portion of the fixture containing the screw threads for the globe and guard should be constructed of corrosion-resistant material.

20.5 Permanent nonwatertight fixtures

Nonwatertight lighting fixtures may be provided for interior locations, except where watertight fixtures are recommended. Nonwatertight lighting fixtures provided for forecastle, deck houses (not used as living quarters), cargo spaces (when permanently illuminated), machinery spaces, steering gear rooms, windlass rooms, galleys, public bath and toilet spaces (when showers are installed), and similar spaces should be dripproof.

Incandescent dome fixtures should be ventilated and designed so that none of the surrounding material is directly exposed to the heat of the lamps.

20.6 High-intensity discharge lamp fixtures

Fixtures connected to an ungrounded electrical system should have isolated winding type ballasts. No discharge lamp circuit should use an rms voltage exceeding 600 V. Ancillary equipment for high-voltage installations, including inductors, capacitors, resistors, and transformers should be either totally enclosed in a substantial grounded metal container (which may form part of the lighting fixture) or placed in a suitable ventilated enclosure of noncombustible material or of fire-resisting construction. A notice “DANGER, HIGH VOLTAGE” should be placed on every enclosure for high-voltage discharge lamps that is accessible to unauthorized persons. The word “DANGER” should be in block letters not less than 10 mm high and the

Copyright © 2002 IEEE. All rights reserved.

Copyright The Institute of Electrical and Electronics Engineers, Inc.
Provided by IHS under license with IEEE
No reproduction or networking permitted without license from IHS
Not for Resale

words “HIGH VOLTAGE” in letters not less than 5 mm high. The letters should be painted red on white background, and the size of each notice should be not less than 64 mm × 50 mm overall.

20.7 Lighting for hazardous locations

Lighting equipment and associated wiring should be in accordance with Clause 33.

20.8 Illumination

20.8.1 General

Lighting design, maintenance considerations, testing, and illumination levels for any space should comply with IES RP-12-1998 and API RP 14F, as applicable.

Except for cargo space lighting, and for lights mounted above the normal line of vision, such as those mounted high in machinery spaces, any single incandescent lamp of more than 60-W rating, or multiple lamps of these types of more than 60-W total rating installed in a single lighting fixture, should be enclosed in a diffusing shade or otherwise shielded to avoid excessive brightness.

Berth lights should be mounted to have minimum horizontal projection so that the light may not be covered with bedding.

There should be over-the-side lighting at each pilot embarkation station.

20.8.2 Lighting for cargo handling

High-intensity lighting fixtures used for the illumination of cargo spaces, hatches, and cargo handling gear should be mounted at a sufficient height to be above the normal viewing field of persons on the working deck. Outside lighting for lighters, wharves, gangways, decks, and hatches should be from overhead. In cargo spaces, lights should be located to project on cargo ports and hatches.

20.8.3 Lighting for lifeboat and liferaft area

Each vessel should have floodlights for the illumination of lifeboat and liferaft launching areas. Floodlights should be located where they can be directed to illuminate launching equipment and the area for launching, from the stowage position to the water. Each floodlight should have a manual means of positioning that does not require the use of tools, and it should be connected to the supply circuit by a short length of flexible cord without the use of a plug and receptacle. The flexible cord should be constructed for extra hard usage. Each floodlight should be supplied from an emergency lighting circuit.

20.9 Searchlights

20.9.1 General

Ship searchlights may be permanent or removable. They should be capable of elevating and rotating through their intended operating range. When two searchlights are provided, they should be mounted at the extreme sides of the vessel. When mounted in an area other than a bridgewing, they should be provided with remote operating controls and local operating controls.

--`,,`-`-`,,`,,`,`,,`---

Copyright © 2002 IEEE. All rights reserved.
Copyright The Institute of Electrical and Electronics Engineers, Inc.
Provided by IHS under license with IEEE
No reproduction or networking permitted without license from IHS
Not for Resale

20.9.2 Construction and installation

Searchlight and searchlight controls should be watertight. Construction and materials should be appropriate for the mounting location. To permit immediate operation, searchlight covers should not be used. The control switch should be mounted close to the point of operation of the light.

Heat-producing controls and junction boxes should be mounted on metal bulkheads with ample ventilation space. Where mounting on a metal bulkhead is not practical, a backing of heat insulating material should extend 30 cm beyond the extent of the heat-producing equipment. Mounting should be sufficiently rigid so as to restrict vibration. A suitable cable clamping device should be employed where the cable enters the body of the light.

20.9.3 Lifeboat searchlights

Searchlights installed on lifeboats should comply with ASTM F1003-86. When the lifeboat has a cabin, the searchlight should be securely mounted to the top of that cabin. Where there is no cabin, the searchlight should be capable of being attached to a sturdy stanchion or other structure. Searchlights mounted on stanchions should be safely stowed when not in use. Mounting hardware should be adequately sized and corrosion-resistant.

The searchlight should be wired with a rubber-jacketed flexible cord constructed for extra hard usage, of a size not less than 16 AWG. The cord should be of sufficient length to permit rotation and elevation of the light.

20.10 Emergency lighting

All emergency lights should have a distinguishing mark, such as a red “E,” for easy identification. Emergency lights should provide adequate illumination, generally a certain percentage of normal illumination, to permit safe operation of the vessel, as well as emergency egress.

Each exit light required on vessels should have the word “EXIT” in red block letters.

20.11 Nameplates

Every lighting fixture should have a nameplate attached inscribed with the following data:

a) Marine (name of apparatus)
b) Name of manufacturer
c) Type
d) Voltage
e) Amperes
f) Watts
g) Model and serial number

21. Navigation lights and signals

21.1 General

Navigation lights and signals should meet the International Regulations for Preventing Collisions at Sea (COLREGS), except where modified by the authority having jurisdiction.

Copyright © 2002 IEEE. All rights reserved.

Copyright The Institute of Electrical and Electronics Engineers, Inc.
Provided by IHS under license with IEEE
No reproduction or networking permitted without license from IHS Not for Resale

21.2 Navigation lights

Each navigation light should be type-accepted by the authority having jurisdiction for the intended service. Side, masthead, and stern lights should have dual light sources and should be controlled by a navigation light indicator panel located in the navigating bridge. Electric navigation light fixtures should be watertight.

21.3 Signaling lights

When a daylight signaling lamp (fixed or semifixed) is required by the authority having jurisdiction, the signaling light should be energized from an emergency lighting circuit. Each portable signaling light should be energized from a self-contained storage battery that can operate the light continuously for 2 h without recharging.

21.4 Navigation light indicator panel

The navigation light indicator panel should provide audible and visual indication of failure of a lamp in use. Where the authority having jurisdiction requires a secondary light source, there should be a means for immediate transfer to the second light source. It should be possible to silence the audible signal while the visual signal remains.

Each navigation light source is to be fed by an individual branch circuit with each insulated conductor controlled and protected either by a switch and fuse or circuit breaker. The overcurrent protection on the feeders should be at least twice the capacity of the overcurrent protection devices of the navigational light panel. The navigation light panel shall be fitted with main over-current devices rated or set greater than the maximum loading including spares of the panel for each feeder.

Recommended circuit diagram for control of the navigation lights are shown in Figure 5.

Copyright © 2002 IEEE. All rights reserved.
Copyright The Institute of Electrical and Electronics Engineers, Inc.
Provided by IHS under license with IEEE
No reproduction or networking permitted without license from IHS
Not for Resale

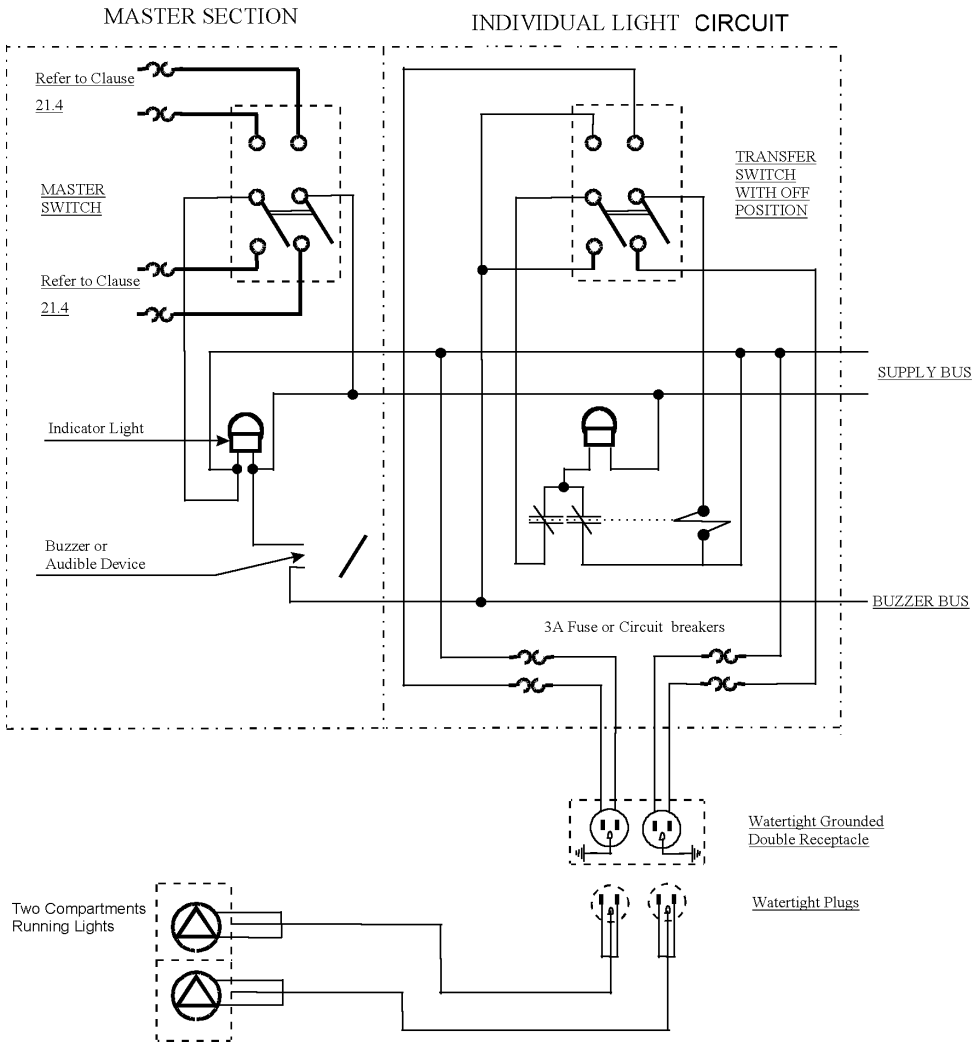

Figure 5—Semiautomatic navigation light panel

21.5 Whistle and siren control systems

There should be a mechanical means for operating the ship's whistles from the navigating bridge regardless of other systems installed. The manual actuating lead should be as direct as possible, amply protected, and when suspended for more than 4.5 m, supported by corrosion-resistant hardware. The system should be provided with ample corrosion resistant springs to counteract the force on the lever and to ensure the proper functioning of the system.

When electrically operated whistles and sirens are installed, all parts should be independent of the mechanical system. If a motor-operated timer is installed, particular attention should be given to its construction and location so that it will be inaudible in the navigating bridge and will not affect the magnetic compass. The power supply for electrically operated whistles and sirens should be taken from the emergency system. See Clause 6.

Copyright © 2002 IEEE. All rights reserved.

Copyright The Institute of Electrical and Electronics Engineers, Inc.
Provided by IHS under license with IEEE
No reproduction or networking permitted without license from IHS
Not for Resale

When an electrically operated actuating valve is located more than 1.5 m from the whistle, an automatic drain feature for the whistle steam/air supply pipe should be installed.

22. Storage batteries

22.1 General

Battery-powered supply systems are utilized in marine applications primarily for the following reasons:

a) Provide continuous power, not interrupted by generator failures and shutdowns
b) Provide emergency power during generator failures and shutdowns
c) Serve as buffers between electronics equipment and generating equipment
d) Provide power to equipment designed for dc input power
e) Uninterruptible power supplies for navigation, communication and control systems

Rechargable batteries produce hydrogen and may require the classification of locations where they are installed. Reference Clause 33 for area classification.

22.2 Recommendations

The recommendations of this subclause apply to permanently installed power, control, and monitoring storage batteries. These batteries may be either lead-acid or alkaline type batteries and either vented or sealed. When selecting the type of battery, consideration should be given to the suitability of the battery type for the specific application.

Vented batteries are batteries in which the electrolyte can be replaced, which freely release gas during periods of charge and overcharge.

Sealed-gelled electrolyte batteries minimize the quantity of gas released through a pressure relief valve by recombining the products of electrolysis. The electrolyte in this type of battery cannot be replaced.

Each battery consists of one or more cells with the cells connected in series or parallel, depending on the desired output voltage and capacity. Each cell contains an anode (reducing material or fuel), a cathode or oxidizing agent, and the electrolyte (which provides the necessary internal ionic conductivity).

22.3 Specific applications

22.3.1 Continuous power applications

22.3.1.1 Controls

It is recommended that electrical control systems be powered by a dc source because most of these systems are designed “normally energized” (commonly referred to as “failsafe”); this avoids unnecessary equipment shutdown with temporary losses in ac power. Also, continuous power frequently is necessary to eliminate step input functions to controllers, often causing step output functions to process loops.

22.3.1.2 Instrumentation

Many instrumentation circuits utilize dc power for simplicity in reducing the effects of magnetic coupling of continuous and transitory extraneous signals into instrumentation loops.

Copyright © 2002 IEEE. All rights reserved.
Copyright The Institute of Electrical and Electronics Engineers, Inc.
Provided by IHS under license with IEEE
No reproduction or networking permitted without license from IHS
Not for Resale

22.3.2 Standby power applications

Because the majority of electrical power utilized in marine applications is self-generated and alternative sources of power are not always readily available, many safety systems and other critical loads require standby power.

It is recommended that ac-powered equipment operated by dc to ac inverters be avoided whenever dc-powered equipment can be utilized directly. The elimination of inverters reduces the number of components subject to failure, thereby improving reliability. Inverters are also less efficient and require larger batteries.

22.3.2.1 Buffer applications

DC power systems often are installed to serve as buffers between power generators and electronic equipment, reducing the equipment's exposure to transients and short periods of time when ac power is off-frequency or off-voltage.

22.4 Type of batteries

Numerous types of batteries are available. A comparison of batteries by cell type is shown in Table 23.

Table 23—Comparison of batteries by cell type

Type	Projected useful life (years)	Projected cycle life[a] (number of cycles)	Wet shelf life[b] (months)	Comments[c]
Primary	1–3	1	12	a) Least maintenance b) Periodic replacement c) Cannot be recharged
SLI (starting, lighting, and ignition) (automotive type)	1/2–2	50–100	2–3	a) High hydrogen emission b) High maintenance c) Not recommended for float service or deep discharge d) Low shock tolerance (flat plat design) e) Susceptible to damage from temperatures >27 °C
Lead antimony	8–15	600–800	4	a) High hydrogen emission (increases with age) b) Periodic equalizing is required for float service and full recharging c) Low shock tolerance d) Susceptible to damage from high temperature

Copyright © 2002 IEEE. All rights reserved.

Copyright The Institute of Electrical and Electronics Engineers, Inc.
Provided by IHS under license with IEEE
No reproduction or networking permitted without license from IHS
Not for Resale

Table 23—Comparison of batteries by cell type *(continued)*

Type	Projected useful life (years)	Projected cycle life[a] (number of cycles)	Wet shelf life[b] (months)	Comments[c]
Lead Calcium	8–15	40–60	6	a) Low hydrogen emission if floated at 2.17 V per cell b) Periodic equalizing charge is not required for float service if floated at 2.25 V per cell. However, equalizing is required for recharging to full capacity. When floated below 2.25 V per cell equalizing is required d) Susceptible to damage from deep discharge and temperatures >27 °C e) Low shock tolerance
Lead Selenium	20+	600–800	6	a) Low hydrogen emission if floated at 2.17 V per cell b) Periodic equalizing charge is not required for float service if floated at 2.23 V per cell. However, equalizing is required for recharging to full capacity. When floated below 2.23 V per cell equalizing is required c) Susceptible to damage from deep discharge and temperatures >32 °C d) Low shock tolerance (flat plate design)
Lead Plante (pure lead)	20+	600–700	4	a) Moderate hydrogen emission if floated at 2.17 V per cell b) Periodic equalizing is required for float service and full recharging c) Susceptible to damage from temperatures >32 °C
Nickel Cadmium (Ni-Cad)	25+	1000+	120+	a) Low hydrogen emission if floated at 1.40 V per cell b) Periodic equalizing charge is not required for float service, but is required for recharging to full capacity c) High shock tolerance d) Can be deep cycled e) Least susceptible to temperature (<43 °C) f) Can remain discharged without damage

[a]Cycle life is the number of cycles at which time a recharged battery will retain only 80% of its original ampere-hour capacity. A cycle is defined as the removal of 80% of the rated battery ampere-hour capacity.
[b]Wet shelf life is defined as the time that an initially fully charged battery can be restored at 77 °F until permanent cell damage occurs.
[c]Float voltages listed are for 77 °F.

Copyright © 2002 IEEE. All rights reserved.
Copyright The Institute of Electrical and Electronics Engineers, Inc.
Provided by IHS under license with IEEE
No reproduction or networking permitted without license from IHS
Not for Resale

22.5 Selection and assembly

Batteries should be selected to withstand all conditions that may be encountered in the shipboard application.

22.5.1 Battery assembly

Cells should be assembled in trays or racks of suitable corrosion-resistant material and rigid construction. Cells should be equipped with handles for convenient lifting. The number of cells in a tray or rack will depend on the weight and on the space available for installation. It is recommended that the weight of trays or racks not exceed approximately 110 kg. Battery trays or racks should be arranged so that the trays or racks are accessible and should have a minimum of 250 mm of head room.

Where racks are employed, the floor space underneath the rack plus a sufficient area around the extent of the battery to contain any spillage during maximum vessel inclination shall be curbed and coated with a corrosion-resistant material over the natural floor. Addition of trays beneath the battery rack is not required.

Each cell/battery tray or rack should have a nameplate securely attached to the tray or rack or molded onto the tray case. The nameplate should contain the following:

a) Battery manufacturer's name or trademark
b) Battery type designation
c) Ampere hour rating at some specific rate of discharge (rating and rate of discharge should correspond to the specific application of the tray)
d) Specific gravity of electrolyte when charged (for lead-acid batteries)

Intercell connections and terminals for connections between trays or racks and for external wiring should be suitable for the maximum current produced by the cells/batteries. For diesel engine cranking batteries with high discharge rates, copper inserts in posts or other special provisions may be required.

22.6 Installation and arrangement

22.6.1 Battery size categories

Battery installations are classified based on the power output of the battery charger. These categories are large, moderate-sized, and small.

22.6.1.1 Large batteries

A large battery installation is one connected to a charging device with an output of more than 2 kW computed from the highest possible charging current and the rated voltage of the battery installation.

22.6.1.2 Moderate-sized batteries

A moderate-sized battery installation is one connected to a charging device with a power output of 0.2 kW up to and including 2 kW computed from the highest possible charging current and the rated voltage of the battery installation.

22.6.1.3 Small batteries

A small battery installation is one connected to a charging device with a power output of less than 0.2 kW computed from the highest possible charging current and the rated voltage of the battery installation.

Copyright © 2002 IEEE. All rights reserved.

Copyright The Institute of Electrical and Electronics Engineers, Inc.
Provided by IHS under license with IEEE
No reproduction or networking permitted without license from IHS
Not for Resale

22.6.2 Battery installation

22.6.2.1 General

Batteries should be located where they are not exposed to excessive heat, extreme cold, spray, steam, or other conditions that would impair performance or accelerate deterioration. Batteries for emergency service, including emergency diesel engine cranking, should be located where they are protected as far as practicable from damage due to collision, fire, or other casualty.

Alkaline batteries and lead-acid batteries should not be installed in the same compartment or enclosure. In addition, on every vessel where both alkaline and lead-acid storage batteries are installed, a separate set of necessary maintenance tools and equipment for each battery type should be provided.

Sealed-gelled electrolyte batteries may be installed in locations containing standard marine or industrial electrical equipment if protected from falling objects and mechanical damage, provided all ventilation requirements are met.

Where more than one, normally operating, charging device is installed for any battery or group of batteries in one location, the total power output should be used to determine battery installation requirements. Spare (nonoperating) charging devices shall not be counted in the total output requirements.

Each battery conductor, except conductors for engine cranking batteries, should have an overcurrent protective device located as stated in 22.11. Cranking batteries should be located as closely as practicable to the engine or engines served, to limit voltage drop in cables with the high current required. Electric cables, other than those for the battery or battery room lighting, should not be installed in the battery room.

When batteries are installed in a closed space, both mechanical ventilation and emergency sourced lighting are required. (See 22.7 for ventilation requirements). Lighting should be provided for battery maintenance with the switch located outside the space in a non-hazardous area. See Clause 33 for details on equipment classification for lighting fixtures installed in battery rooms or lockers.

22.6.2.2 Large battery installation

Large storage batteries, such as for emergency lighting, emergency post lube oil pumps, switchgear operation and control, and so on, should be installed in a room assigned to the battery only, but they may be installed in a suitable deck locker or box on the open deck if such a room is not available. See 33.7.3 for additional equipment recommendations.

A securely attached danger notice should be installed on each door of a battery room, each battery box cover, or each protective covering stating that a naked light or smoking is not allowed in the room.

22.6.2.3 Moderate-sized battery installation

Batteries of moderate size, such as those for emergency lighting, engine cranking, communications supply, and so on, should be installed in a battery room, in a box on deck, or in a box or locker (or lockers) in another space such as the emergency generator room, machinery space, storeroom, or other suitable location.

If a moderate-sized installation is in a ventilated compartment such as the engine room and is protected from falling objects, then the batteries do not have to be installed in a box or locker.

Moderate-sized batteries should not be installed in sleeping quarters.

--`,,`-`-`,,`,,`,`,,`---
Copyright © 2002 IEEE. All rights reserved.
Copyright The Institute of Electrical and Electronics Engineers, Inc.
Provided by IHS under license with IEEE
No reproduction or networking permitted without license from IHS
Not for Resale

Engine cranking batteries should be located as closely as practicable to the engine or engines served, to limit voltage drop in cables with the high current required.

22.6.2.4 Small battery installation

Small batteries, such as those for emergency radio supply, and so on, should be installed in a battery box located as desired in well-ventilated spaces.

Small batteries may be installed in an open position if protected from falling objects and mechanical damage. Small battery installations should not be within 2.0 m of radio apparatus or other delicate equipment that would be made inoperative by slight corrosion from battery gases.

Small batteries should not be located in closets, storerooms, or similar spaces.

Small batteries should not be located in sleeping quarters unless hermetically sealed.

22.6.3 Arrangement

Batteries should be arranged to permit ready access to each cell or tray of cells from the top and at least one side for inspection, testing, watering (if required), and cleaning. Shelves or racks should not be more than 760 mm deep and 1067 mm high.

For cells that required addition of electrolyte (i.e., wet cells), there should be at least 300 mm, with 380 to 460 mm recommended, clear space above the levels of the filling openings.

Trays, when used, should be readily removable for repair or replacement.

When batteries are arranged in two or more tiers, each shelf or rack should have at least 50 mm of space front and back for air circulation.

22.6.4 Battery trays and racks

Battery trays and racks should be securely chocked with wood strips or equivalent means to prevent movement. Each battery rack should be secured to prevent movement.

Each tray or rack should be fitted with nonabsorbent insulating supports, not less than 20 mm high on the bottom, and with similar spacer blocks at the sides, or with equivalent provision to ensure 20 mm of space around each tray for air circulation.

Each battery tray or rack should be accessible with at least 250 mm of head room.

22.6.5 Battery storage lining

Each battery room or locker should have a watertight lining for the storage of batteries as follows:

a) Storing batteries on shelves: Install lining to a minimum height of 76 mm with lining thickness and material as follows:
   1) For vented lead-acid type batteries: 1.6-mm minimum lead or other material that is corrosion-resistant to the battery electrolyte.
   2) For alkaline type batteries: 0.8-mm minimum steel or other material that is corrosion resistant to the battery electrolyte.

b) Storing batteries on racks: The battery racks must be made of a material that is corrosion-resistant to the battery electrolyte and have containment space under the rack, as required in 22.6.3.

Copyright © 2002 IEEE. All rights reserved.

Copyright The Institute of Electrical and Electronics Engineers, Inc.
Provided by IHS under license with IEEE
No reproduction or networking permitted without license from IHS
Not for Resale

Alternatively, a battery room may be fitted with a watertight lead (steel for alkaline batteries) pan over the entire deck, carried up not less than 150 mm on all sides.

Battery boxes should have a watertight lining to a height of 76 mm with the same thickness requirements as the shelf-lining requirements as given in item a) of this subclause.

Batteries installed in general equipment rooms, electrical rooms, and so on shall meet the same storage requirements as those specified for tray and racks inclusive in 22.6.3.

The interior of all battery compartments, including shelves, racks, and other structural parts therein, should be made of corrosion-resistant material or painted with corrosion-resistant paint.

22.7 Ventilation

22.7.1 General

All rooms, lockers, and boxes for storage batteries should be arranged and ventilated to avoid accumulation of flammable gas. Particular attention should be given to the fact that the gas involved is lighter than air, and it will tend to accumulate in any pockets at the top of the space.

22.7.2 Battery rooms

All battery rooms should be adequately ventilated. Natural ventilation may be employed where the number of air changes are small and if ducts can be run directly from the top of the room to the open air above, with no part of the cut more than 45º from vertical. If natural ventilation is impracticable, mechanical exhaust ventilation should be provided.

Closed or open loop cooling systems (i.e., air conditioning) may be provided where a sufficient number of air exchanges is provided to eliminate any possibility of gas accumulation.

If mechanical ventilation or cooling system is to be provided, the following recommendations should be adhered to:

a) Battery room ventilation system or cooling system return air should be separate from ventilation systems for other spaces. This will provide once through ventilation/cooling for battery rooms.
b) Ventilation exhausts shall be at the top of the room and ventilation supplies at the bottom of the room.
c) Each blower should have a nonsparking fan.
d) Fans should be capable of completely changing the air in a maximum of 20 min.
e) Electric fan motors should be outside the duct and compartment.
f) When required for large battery rooms, electric fan motors shall be suitable for the area classification in which they are installed.
g) Electric fan motors should be at least 3 m from the exhaust end of the duct.
h) The ventilation or cooling system should be interlocked with the battery charger such that the battery cannot be charged without operating the ventilation system.
i) Interior surfaces of ducts and fans should be painted with corrosion-resistant paint.
j) Adequate openings for air inlet should be provided near the floor.

22.7.3 Battery lockers

Battery lockers should be ventilated, if practicable, similarly to battery rooms by a duct led from the top of the locker to the open air or to an exhaust ventilation duct. However, in machinery spaces and similar well-ventilated compartments, the duct may terminate not less than 910 mm above the top of the locker.

Louvers or the equivalent should be provided near the bottom of the locker for entrance of air.

Copyright © 2002 IEEE. All rights reserved.
Copyright The Institute of Electrical and Electronics Engineers, Inc.
Provided by IHS under license with IEEE
No reproduction or networking permitted without license from IHS
Not for Resale

22.7.4 Battery boxes

Deck boxes should be provided with a duct from the top of the box to at least 1.2 m above the box ending in a goose neck, mushroom head, or equivalent to prevent the entrance of water. Holes for air entrance should be provided on at least two opposite sides of the box.

The entire deck box, including openings for ventilation, should be sufficiently weathertight to prevent entrance of spray or run.

Boxes for small batteries should have openings near the top to allow the escape of gas.

22.7.5 General equipment rooms, electrical rooms, and other areas

Where all the requirements of 22.6.3 are met, the normal ventilation or cooling system in the room where the battery is to be installed may be used.

22.7.6 Large battery installation ventilation

Large battery installations should be in battery rooms having a power exhaust ventilation system with openings for intake air near the floor. These openings should be of sufficient size and number to allow for the passage of the quantity of air that must be expelled by the ventilation system.

The quantity of expelled air should be at least as follows in Equation (3):

$$Q = 110In \tag{3}$$

where

Q is the quantity of air expelled in l3/h

I is the maximum charging current during gas formation, or 25% of the maximum obtainable charging current of the facility, whichever is greater, in amperes

n is the number of cells in series

The ventilation rate for sealed-gelled electrolyte batteries may be reduced to 25% of the ventilation rate for large battery installations.

22.7.7 Moderate-sized and small battery installation ventilation

Battery rooms or battery lockers for moderate-sized or small battery installations should have louvers near the bottom of the room or locker for the intake of ventilation air.

The ventilation rate for moderate-sized and small battery installations should meet the same requirements as for large battery installations.

22.8 Cables

If a cable enters a battery room, the penetration through the bulkhead, deck, or overhead should be made watertight. The cables should be sealed to prevent the entrance of electrolyte by spray or creepage. All connections within the battery room should be resistant to the electrolyte.

The current-carrying capacity of a connecting cable should be at least equal to the maximum charging current or maximum discharge current, whichever is greater. The current carrying capacity of the cables shall be in accordance with Table 26 and Table 27 corrected to the appropriate ambient temperature.

Copyright © 2002 IEEE. All rights reserved.

Copyright The Institute of Electrical and Electronics Engineers, Inc.
Provided by IHS under license with IEEE
No reproduction or networking permitted without license from IHS
Not for Resale

22.9 Battery rating

The capacity of any battery should have minimum output sufficient for its application and duty. In determining battery capacity, consideration should be given to time and rate of discharge.

The capacity of batteries for emergency lighting and power should be as stated in Clause 6.3. Where the voltage of the emergency lighting system is the same as the voltage of the general lighting system, battery voltage, at the rated rate of discharge, should be a maximum of 105% of generator voltage when fully charged, and a minimum of 87.5% of generator voltage at the end of rated discharge.

Batteries for diesel engine cranking should have a maximum output sufficient to ensure breakaway torque at the lowest expected temperature. The battery should have a capacity capable of providing a minimum of 1.5 min of cranking at a speed sufficient to ensure engine starting and have sufficient capacity to provide a minimum of six consecutive engine starts without recharging.

22.10 Charging facilities

Charging facilities should be provided for all secondary batteries such that they can be completely charged from a completely discharged state in a reasonable amount of time with regard to the battery service requirements.

Suitable means, such as an ammeter and a voltmeter, should be provided to control and monitor the charging of batteries and to protect them against discharge into the charging circuits.

For floating circuits or other conditions where the load is connected to the battery while the battery is charging, the maximum battery voltage should not exceed a safe value for any connected apparatus. A voltage regulator should be used for any application where safe voltage cannot otherwise be assured. The voltage characteristics of the generator, or generators, that will operate in parallel with the battery must be suitable for each application. Where a low-voltage battery is floated on a circuit with a resistor in series, all connected apparatus shall be capable of withstanding line voltage to ground.

When the voltage of the emergency lighting battery is the same as the ship’s dc supply, the battery may be arranged for charging in two equal sections with a charging resistor provided for each section. A booster generator may provided to supply charging voltage as an alternative to charging the battery in two equal sections. With either method, the arrangement of the automatic transfer switch should be such that emergency power is available whether the battery is being charged or not.

Except for batteries that normally stand idle for long periods of time, the charging facilities for any battery should completely charge the battery in a maximum of 8 h without exceeding a safe charging rate. For those batteries that normally stand idle for long periods of time, a trickle charge to neutralize internal losses should be provided where practicable. For low-voltage batteries provided in duplicate for communications supply (one in service, the other on charge), the charging rate should be commensurate with the average discharge rate.

22.11 Overload protection

An overload protective device should be in each battery conductor, except conductors of engine cranking batteries and batteries with a nominal voltage of 6 V or less. For large battery installations, the overcurrent protective device should be located next to, but outside of, the battery room.

Except when a rectifier is used, charging equipment for all batteries with a voltage more than 20% of line voltage should be provided with automatic protection against current reversal.

Fuses may be used for the protection of emergency lighting storage batteries instead of circuit breakers.

Copyright © 2002 IEEE. All rights reserved.
Copyright The Institute of Electrical and Electronics Engineers, Inc.
Provided by IHS under license with IEEE
No reproduction or networking permitted without license from IHS
Not for Resale

23. Cables types for installation on shipboard

Cables for installation on shipboard shall be listed as marine shipboard cable, Navy cable, or other cable as described in this clause.

23.1 Marine Shipboard Cable

Marine shipboard cables shall be listed as Marine Shipboard Cable by a nationally recognized testing laboratory. These cables should meet the performance and construction requirements of IEEE Std 1580-2001, or UL 1309-1995/CSA 22.2 No. 245.

Table 24—Performance test requirements of IEEE Std 1580

Test to be performed	Test categories		
	Type test (TT)[a]	Production sample (PST)[b]	Routine test (RT)[c]
Insulation	X	X	—
Jacket	X	X[d]	—
High voltage	—	X	X
Partial discharge	—	—	X
Conductor resistance	—	—	X
Insulation resistance	—	—	X
Flammability	X	X[e]	—
Ease of stripping	—	X	—
Salt water immersion	X	—	—
Cable immersion in oil	X	—	—
Pull-through metal plates	X	—	—
Bending endurance	X	—	—
Cold bend test	X	—	—
Cold impact test (optional)	X[f]	—	—
Vibration	X[g]	—	—
Incidental motion (repeated flexing)	X[h]	—	—
Insulation discharge resistance test	X	—	—

[a]Type tests (TT)—Type tests are the minimum initial testing for a manufacturer to determine compliance with this recommended practice. TT should be qualified by a third party NRTL as meeting this recommended practice. Unless otherwise specified, TT should be performed on a 3 conductor 6 AWG cable for power and distribution, 7 conductor 12 or 14 AWG cable for control, and a 7 or 8 pair 18 AWG for signal cables. Any other cables in their respective cable designation for distribution, control, or signal that are 23 mm in diameter or larger may also be considered representative. This does not relieve the manufacturer from ensuring compliance with the test requirements for all cable types and sizes.

[b]Production sample tests (PST)—Production sample tests should be performed at the frequency established in NEMA WC 54 (ICEA T-26-465). Where no frequency is identified for a particular test in NEMA WC 54 (ICEA T-26-465), the testing frequency should be determined by the product certification organization.

[c]Routine tests (RT)—Routine tests should be performed on each length of finished cable.

[d]PST for weatherometer and mechanical water absorption as related to the jacket/sheath shall be done at a frequency of every three years.

[e]PST for flammability and when invoked for smoke, acid gas, and toxicity tests as related to the insulation/jacket/sheath shall be done at a frequency of every three years.

[f]This test applies to Transport Canada requirements test at –35 °C cold impact test per subclause 4.13 of CSA 22.2 No. 03.

[g]This test applies to Type MC (CWCMC) for use in areas of high vibration.

[h]This test applies to Type MC (CWCMC) for use in areas of repeated flexing.

Copyright © 2002 IEEE. All rights reserved.

Copyright The Institute of Electrical and Electronics Engineers, Inc.
Provided by IHS under license with IEEE
No reproduction or networking permitted without license from IHS
Not for Resale

23.2 Navy cable

Navy cables manufactured and tested in accordance with U.S. Navy military specifications MIL-C-24643A, MIL-C-24640A, or MIL-DTL-915G may also be used, provided they meet the IEEE Std 1202-1991 or CSA C22.2 No. 03, Vertical Flame Test.

23.3 Other shipboard cables

Marine shipboard cables meeting the performance requirements of IEEE Std 1580-2001 or UL 1309-1995, manufactured and tested to various national and international standards such as BS 6883-1999, CSA 22.2 No. 245, IEC 60092-350 series, JIS 3410, or other applicable marine standards are acceptable.

23.4 MI cable

MI cable as defined by NFPA 70-2002, NEC Article 332 may be used.

23.5 Specialty cables

Other cables contained in Clause 24 may be used.

24. Cable application

24.1 General

Cables meeting the requirements of Clause 23 are specifically designed for installation and use in a marine shipboard environment. A variety of constructions is detailed in IEEE Std 1580-2001 permitting a selection of conductor insulation types, jacket types, and ampacities for the general usage distribution type cables. Cable constructions intended for other specific applications and different voltages are also included. The application of each respective type is defined the following paragraphs of this subclause.

These cables are designed particularly to meet the recognized special environmental conditions, installation methods, and reliability requirements of marine service addressed in this recommended practice. The design and characteristics of any cables used other than those defined in Clause 23 should be carefully evaluated to ensure a total cable equivalency with respect to flame retardance, conductor material and temperature rise, insulation characteristics and life expectancy, jacket flexibility, mechanical strength, and compatibility with marine installation methods and adverse service conditions.

Each control, communication, or signal system cable with more than four conductors or three pairs should be selected to provide 10% spare circuit conductors or pairs, but not less than required for a single additional circuit. Where multiplexed systems are employed, conductor bandwidth should be sufficient to provide for a 10% growth.

The maximum continuous load carried by a cable should not exceed its continuous current rating. Cable should be selected to ensure that the maximum rated conductor temperature for normal operation of the insulation is not exceeded when connected to the terminals of the circuit protective device. The cross-sectional area of the conductors should be sufficient to ensure that under short-circuit conditions, the maximum rated conductor temperature for short-circuit operation is not exceeded, taking into consideration the time-current characteristics of the circuit protective device and the peak value of the prospective short-circuit current. For cable short-circuit current curves, refer to ICEA P-32-382.

--`,,`-`-`,,`,,`,`,,`---

Copyright © 2002 IEEE. All rights reserved.
Copyright The Institute of Electrical and Electronics Engineers, Inc.
Provided by IHS under license with IEEE
No reproduction or networking permitted without license from IHS
Not for Resale

24.2 Distribution cables (600/1000 V)

These cables should be used for the distribution of power up to their voltage rating throughout the system, and they may be used in lighting, communication, control, and electronic circuits as desired.

24.3 Distribution cables (medium voltage, 2000 V to 35 000 V)

These cables should be used for the distribution of power up to their voltage rating.

24.4 Control cables (600/1000 V)

These cables should be used for control, indicating communication, electronic, and similar circuits where multiple parallel conductor cables are required. Conductor size selection should be made with particular attention to voltage drop considerations.

24.5 Signal cables (300 V, 600/1000 V)

These cables should be used for signal transmission where twisted groups of conductors are desired. Individual or overall group shielding may be provided by means of a tape and drain (ground) wire or a tinned copper braid, or a combination of both to prevent electrostatic or electromagnetic interference.

24.6 Special service requirements

Cables, cords, and wires required for applications not otherwise defined should be in accordance with the following.

24.6.1 Portable cords and cables, jacketed, two, three, or four-conductor

These cords and cables should be used only for connection of portable lamps and appliances and other equipment not suitable for fixed wiring and should conform to the requirements of NFPA 70-2002, Article 400, for hard usage and extra hard usage. Portable cords and cables may also be used, as specified by MIL-C-24643A or MIL-DTL-915G. Ampacities of cords and cables should be as defined by NFPA 70-2002 or MIL-HDBK-299, as applicable.

24.6.2 Coaxial cables

These cables should be selected in accordance with MIL-C-17 or IEC 60966. These cables should be flame retardant and meet IEEE Std 1202-1991.

24.6.3 Optical fiber cables

These cables should be selected in accordance with MIL-PRF-85045F, UL 1651-1997, or IEC 60794-2. These cables should be flame retardant and meet IEEE Std 1202-1991.

24.6.4 Instrumentation, data and communications cables

These cables should be selected in accordance with IEEE Std 1580-2001, UL 13-1996, UL 444-1994, or UL 2250-1996. These cables should be flame retardant and meet IEEE Std 1202-1991.

Copyright © 2002 IEEE. All rights reserved.

Copyright The Institute of Electrical and Electronics Engineers, Inc.
Provided by IHS under license with IEEE
No reproduction or networking permitted without license from IHS
Not for Resale

24.6.5 Heat tracing system

Heat tracing systems should be designed, installed, and operated in accordance with IEEE Std 515-1997, IEEE Std 515.1-1995, or IEEE Std 844-2000 depending on heating application. For shipboard applications of heat tracing, ground fault protection is required.

24.6.6 Switchboard wiring

See 8.3 and 8.6 for recommendation concerning switchboard wiring.

24.6.7 Wires

Component insulated wiring should be selected from a recognized commercial standard or military specification MIL-W-16878 or MIL-W-22759, with particular attention to the effects of vibration, moisture, ambient temperature, and other adverse conditions such as contaminants and oils, which may be present.

24.6.8 Special applications

Flexible cables used for special applications such as elevators and cranes should meet an appropriate recognized commercial standard (e.g., UL 62-1997 or IEEE Std 1580), Military Specification (e.g., MIL-C-24643A), or NEMA WC58. Flame-retardant versions of these cables should be used where possible.

24.7 AC applications

In general, multiple conductor cable should be used for all alternating current lighting and power circuits. The conductors of all phases of any circuit should be contained in a single cable to neutralize induction.

If the rating of any circuit is such that the current is greater than the rated capacity of any one multiple conductor cable, two or more multiple conductor cables of the identical conductor size may be connected in parallel. One conductor of each phase of the circuit should be contained in each cable.

Where the use of multiple conductor cable will involve a difficult or undesirable arrangement, or where the use of single conductor cables will not incur heating of adjacent equipment or structure, single conductor cables may be used.

24.8 Ampacities

The current-carrying capacities (ampacities) of the various cable types are tabulated in Table 25 through Table 29.

Current-carrying capacities should be adjusted as noted to suit the ambient temperature in which the cable is installed if it differs from 45 °C. Cable ampacities in Table 25 are for single-banked installations. Double-banked cables should be derated in accordance with Note 6 of Table 25.

Conductors should be sized to limit conductor operating temperatures at the termination device to those designated for the termination devices involved. For listed devices, unless marked with higher temperature limits, the terminals of devices rated 100 A or less typically are limited to operating temperatures of 60 °C. Devices rated in excess of 100 A typically are limited to 75 °C. In selecting circuit conductors, the designer shall assure that the actual conductor temperature does not exceed the temperature rating of the terminal device. The derating required for motor circuits and continuous loads on devices such as circuit breakers that limits the actual current allowed in circuit wiring can be considered when determining conductor operating temperature. Other factors such as ambient temperature within enclosures and the single conductor

Copyright © 2002 IEEE. All rights reserved.
Copyright The Institute of Electrical and Electronics Engineers, Inc.
Provided by IHS under license with IEEE
No reproduction or networking permitted without license from IHS
Not for Resale

configuration of most terminations also can be taken into account when determining the actual conductor temperatures attainable.

Other segments of the cable run where different thermal conditions exist from those at the termination point will require separate derating considerations. The lowest ampacity calculated for any 3-m section in the cable run would determine the cable size.

The ampacities for cable types manufactured and tested in accordance with U.S. Navy military specifications MIL-C-24643A, MIL-C-24640A, and MIL-DTL-915G are to be in accordance with MIL-HDBK-299. Ampacities at 45 °C are to be determined by dividing the 40 °C ampacities in MIL-HDBK-299 by the 40 °C factors contained in Note 5 to Table 25 for the appropriate insulating material. For double-banked installations, the values for U.S. Navy military specification cables are to be multiplied by 0.8, in accordance with Note 6 to Table 25.

Table 25—Distribution, control, and signal cables—single-banked, maximum current-carrying capacity (types T, T/N, E, X, S, LSE, LSX, and P @ 45 °C ambient)

AWG/ kcmil	Cross sectional		Single conductor			Two conductor			Three conductor		
	mm^2	Circular Mils	T	LSE LSX T/N E, X	S, P	T	LSE LSX T/N E, X	S,P	T	LSE LSX T/N E, X	S, P
			75 °C	90 °C	100 °C	75 °C	90 °C	100 °C	75 °C	90 °C	100 °C
20	0.517	1020	9	11	12	8	9	10	6	8	9
18	0.821	1620	13	15	16	11	13	14	9	11	12
16	1.31	2580	18	21	23	15	18	19	13	15	16
-	1.5	2960	20	24	26	17	20	22	14	17	18
15	1.65	3157	21	26	28	18	22	23	15	18	19
14	2.08	4110	28	34	37	24	27	31	20	24	25
12	3.31	6530	35	43	45	31	36	40	24	29	31
10	5.26	10 400	45	54	58	38	46	49	32	38	41
8	8.37	16 500	56	68	72	49	60	64	41	48	52
7	10.5	20 800	65	77	84	59	72	78	48	59	63
6	13.3	26 300	73	88	96	66	79	85	54	65	70
5	16.8	33 100	84	100	109	78	92	101	64	75	82
4	21.2	41 700	97	118	128	84	101	110	70	83	92
3	26.7	52 600	112	134	146	102	121	132	83	99	108
2	33.6	66 400	129	156	169	115	137	149	93	111	122
1	42.4	83 700	150	180	194	134	161	174	110	131	143
1/0	53.5	10 600	174	207	227	153	183	199	126	150	164
2/0	67.4	133 000	202	240	262	187	233	242	145	173	188

Copyright © 2002 IEEE. All rights reserved.

Copyright The Institute of Electrical and Electronics Engineers, Inc.
Provided by IHS under license with IEEE
No reproduction or networking permitted without license from IHS
Not for Resale

Table 25—Distribution, control, and signal cables—single-banked, maximum current-carrying capacity (types T, T/N, E, X, S, LSE, LSX, and P @ 45 °C ambient) *(continued)*

AWG/ kcmil	Cross sectional		Single conductor			Two conductor			Three conductor		
	mm^2	Circular Mils	T	LSE LSX T/N E, X	S, P	T	LSE LSX T/N E, X	S,P	T	LSE LSX T/N E, X	S, P
			75 °C	90 °C	100 °C	75 °C	90 °C	100 °C	75 °C	90 °C	100 °C
3/0	85.0	168 000	231	278	300	205	245	265	168	201	218
4/0	107.2	212 000	271	324	351	237	284	307	194	232	252
250 kcmil	126.7	250 000	300	359	389	264	316	344	217	259	282
262 kcmil	133.1	262 600	314	378	407	278	333	358	228	273	294
300 kcmil	152	300 000	345	412	449	296	354	385	242	290	316
313 kcmil	158.7	313 100	351	423	455	303	363	391	249	298	321
350 kcmil	177.3	350 000	372	446	485	324	387	421	265	317	344
373 kcmil	189.4	373 700	393	474	516	339	406	442	277	332	361
400 kcmil	203	400 000	410	489	533	351	419	455	286	342	371
444 kcmil	225.2	444 400	453	546	588	391	468	504	319	382	411
500 kcmil	253.3	500 000	469	560	609	401	479	520	329	393	428
535 kcmil	271.3	535 000	485	579	630	415	496	538	340	407	443
600 kcmil	304	600 000	521	623	678	450	539	585	368	440	478
646 kcmil	327.6	646 000	557	671	731	485	581	632	396	474	516
750 kcmil	380	750 000	605	723	786	503	602	656	413	494	537
777 kcmil	394.2	777 000	627	755	822	525	629	684	431	516	562
1000 kcmil	506.7	100 0000	723	867	939	601	721	834	493	592	641
1111 kcmil	563.1	1 11 1000	767	942	1025	637	784	854	523	644	701
1250 kcmil	635	1 250 000	824	990	1072	—	—	—	—	—	—

Copyright © 2002 IEEE. All rights reserved.
Copyright The Institute of Electrical and Electronics Engineers, Inc.
Provided by IHS under license with IEEE
No reproduction or networking permitted without license from IHS
Not for Resale

Table 25—Distribution, control, and signal cables—single-banked, maximum current-carrying capacity (types T, T/N, E, X, S, LSE, LSX, and P @ 45 °C ambient) *(continued)*

AWG/ kcmil	Cross sectional		Single conductor			Two conductor			Three conductor		
	mm^2	Circular Mils	T	LSE LSX T/N E, X	S, P	T	LSE LSX T/N E, X	S,P	T	LSE LSX T/N E, X	S, P
			75 °C	90 °C	100 °C	75 °C	90 °C	100 °C	75 °C	90 °C	100 °C
1500 kcmil	761	1 500 000	917	1100	1195	—	—	—	—	—	—
2000 kcmil	1013	2 000 000	1076	1292	1400	—	—	—	—	—	—

Ampacity adjustment factors for more than three conductors in a cable with no load diversity: Percent of values in Table 25 for Three Conductor Cable as adjusted.

Number of Conductors for ambient temperature, if necessary

4 through 6: 80
7 through 9: 70
10 through 20: 50
21 through 30: 45
31 through 40: 40
41 through 60: 35

NOTES

1—Current ratings are for ac or dc.

2—For service voltage 1001 V to 5000 V, Type T, T/N, LSE, and LSX should not be used.

3—Current-carrying capacity of four-conductor cables, where one conductor does not act as a normal current-carrying conductor (e.g., grounded neutral or grounding conductor), is the same as three-conductor cables listed in Table 27.

4—Table 25 is based on an ambient temperature of 45 °C and maximum conductor temperature not exceeding: 75 °C for type T insulated cables, 90 °C for types T/N, X, E, LSE, and LSX insulated cables, and 100 °C for types S and P insulated cables.

5—If ambient temperatures differ from 45 °C, the values shown in Table 25 should be multiplied by the following factors:

Ambient Temperature	Type T insulated cables	Type T/N, X, E, LSE, LSX insulated cables	Type S and P insulated cables
30 °C	1.22	1.15	1.13
40 °C	1.08	1.05	1.04
50 °C	0.91	0.94	0.95
60 °C	—	0.82	0.85
70 °C	—	0.74	0.74

6—The current-carrying capacities in this table are for marine installations with cables arranged in a single bank per hanger and are 85% of the ICEA calculated values [see Note 7]. Double banking of distribution-type cables should be avoided. For those instances in which cable must be double banked, the current-carrying capacities in Table 25 should be multiplied by 0.8.

7—The ICEA calculated current capacities of these cables are based on cables installed in free air, that is, at least one cable diameter spacing between adjacent cables. See IEEE Std 835-1994.

8—For cables with maintained spacing of at least 1 cable diameter apart, the values from this table may be divided by 0.85.

Copyright © 2002 IEEE. All rights reserved.

Copyright The Institute of Electrical and Electronics Engineers, Inc.
Provided by IHS under license with IEEE
No reproduction or networking permitted without license from IHS
Not for Resale

Table 26—Ampacities for marine shipboard single-conductor distribution cables, 2000 V or less, dc only, copper conductors—single-banked (single-layered), maximum current-carrying capacity based on 45 °C ambient

kcmil	75 °C	90 °C	100 °C	110 °C
750	617	738	802	841
1000	747	896	964	1021
1250	865	1038	1126	1183
1500	980	1177	1276	1342
2000	1195	1435	1557	1636
Reference notes to Table 25.				

Table 27—Ampacities for medium-voltage power cable, copper conductor—single-banked (single-layered), maximum current-carrying capacity based on 45 °C ambient, shields grounded on one end (open-circuited shields)

AWG/ kcmil	mm^2	Circular mils	Single-conductor cable					
			Up to 8 kV shielded		8001–15 000 V shielded		15 001–35 000 V shielded	
			90 °C	105 °C	90 °C	105 °C	90 °C	105 °C
6	13.30	26 240	91	103	-	-	-	-
4	21.15	41 740	120	135	-	-	-	-
2	33.62	66 360	158	178	158	178	-	-
1	42.40	83 690	182	205	182	205	178	204
1/0	53.50	105 600	210	237	210	237	205	237
2/0	67.44	133 100	242	273	241	272	236	270
3/0	85.02	167 800	279	315	278	314	271	311
4/0	107.2	211 600	324	366	321	362	315	364
250	126.7	250 000	359	405	356	402	348	400
263	133.1	262 600	370	418	366	413	358	412
313	158.6	313 100	413	466	409	462	397	459
350	177.3	350 000	444	501	440	497	425	494
373	189.3	373 700	462	522	456	515	442	513
444	225.2	444 400	515	581	508	573	495	540
500	253.3	500 000	557	629	549	620	537	617
535	271.2	535 300	580	655	571	645	557	642
646	327.5	646 400	652	736	641	724	619	720
750	380.0	750 000	720	813	706	797	678	793

Copyright © 2002 IEEE. All rights reserved.
Copyright The Institute of Electrical and Electronics Engineers, Inc.
Provided by IHS under license with IEEE
No reproduction or networking permitted without license from IHS
Not for Resale

Table 27—Ampacities for medium-voltage power cable, copper conductor—single-banked (single-layered), maximum current-carrying capacity based on 45 °C ambient, shields grounded on one end (open-circuited shields) *(continued)*

AWG/ kcmil	mm^2	Circular mils	Single-conductor cable					
			Up to 8 kV shielded		8001–15 000 V shielded		15 001–35 000 V shielded	
			90 °C	105 °C	90 °C	105 °C	90 °C	105 °C
777	394.0	777 700	735	830	721	814	692	810
1000	506.7	1 000 000	859	970	842	951	806	948

The allowable ampacities are based on the conductor temperature rise in a given ambient. When selecting conductor sizes and insulation ratings, consideration must be given to the following:

a) The actual conductor operating temperature must be compatible with the connected equipment, especially at the connection points.

b) Conductor selection should be coordinated with circuit and system overcurrent and short-circuit protection to avoid cable damage during through-fault conditions. See ICEA P32-382 to determine conductor short-circuit withstand current.

c) Current-carrying capacity of four-conductor cables, in which one conductor is not a current-carrying phase conductor (e.g., neutral or grounding conductor), is the same as three-conductor cables.

d) If ambient temperatures differ from 45 °C, cable ampacities should be multiplied by the following factors:

	Ambient temperature						
Conductor temperature	30 °C	40 °C	45 °C	50 °C	55 °C	60 °C	70 °C
90 °C	1.10	1.05	1.00	0.94	0.90	0.82	0.67
105 °C	1.08	1.04	1.00	0.96	0.92	0.86	0.76

e) The current-carrying capacities are for cable installations with cables arranged in a single bank per hanger and are 85% of the calculated free air values. Double banking of medium voltage cables is not recommended.

f) The calculated current capacities are based on cables installed in free air, that is, at least one cable diameter spacing between adjacent cables. See IEEE Std 835-1994.

g) For cables with maintained spacing of at least 1 cable diameter apart, the ampacities may be increased by dividing by 0.85.

h) If more than one circuit of parallel runs of the same circuit are installed, there should be a maintained spacing of 2.15 times one conductor diameter between each triangular configuration group. Otherwise cables are considered double-banked.

Copyright © 2002 IEEE. All rights reserved.

Copyright The Institute of Electrical and Electronics Engineers, Inc.
Provided by IHS under license with IEEE
No reproduction or networking permitted without license from IHS
Not for Resale

Table 28—Ampacities for medium-voltage power cable, copper conductor—single-banked, (single-layered), maximum current-carrying capacity based on 45 °C ambient

AWG/ kcmil	mm^2	Circular mils	Three-conductor cable						
			Up to 5 kV nonshielded	Up to 8 kV shielded		8001–15 000 V shielded		15 001–35 000 V shielded	
			90 °C	90 °C	105 °C	90 °C	105 °C	90 °C	105 °C
8			48	-	-	-	-	-	-
6	13.30	26 240	64	91	103	-	-	-	-
4	21.15	41 740	84	120	135	-	-	-	-
2	33.62	66 360	112	158	178	158	178	-	-
1	42.40	83 690	130	182	205	182	205	178	204
1/0	53.50	105 600	151	210	237	210	237	205	237
2/0	67.44	133 100	174	242	273	241	272	236	270
3/0	85.02	167 800	202	279	315	278	314	271	311
4/0	107.2	211 600	232	324	366	321	362	315	364
250	126.7	250 000	258	359	405	356	402	348	400
263	133.1	262 600	—	370	418	366	413	358	412
313	158.6	313 100	266	413	466	409	462	397	459
350	177.3	350 000	296	444	501	440	497	425	494
373	189.3	373 700	—	462	522	456	515	442	513
444	225.2	444 400	330	515	581	508	573	495	540
500	253.3	500 000	365	557	629	549	620	537	617
535	271.2	535 300	—	580	655	571	645	557	642
646	327.5	646 400	407	652	736	641	724	619	720
750	380.0	750 000	496	720	813	706	797	678	793
777	394.0	777 700	—	735	830	721	814	692	810
1000	506.7	1 000 000	571	859	970	842	951	806	948

Refer to Table 27 for notes.

Copyright © 2002 IEEE. All rights reserved.
Copyright The Institute of Electrical and Electronics Engineers, Inc.
Provided by IHS under license with IEEE
No reproduction or networking permitted without license from IHS
Not for Resale

Table 29—Ampacities for medium-voltage power cable, copper conductor—triplexed or triangular configuration (single-layered), maximum current-carrying capacity based on 45 °C ambient

AWG/ kcmil	mm^2	Circular mils	Single-conductor cable (in triplexed or triangular configuration)					
			Up to 8 kV shielded		8001-15,000 V shielded		15 001-35 000 V shielded	
			90°C	105°C	90°C	105°C	90°C	105°C
6	13.30	26 240	92	106	-	-	-	-
4	21.15	41 740	121	135	-	-	-	-
2	33.62	66 360	159	187	164	187	-	-
1	42.40	83 690	184	216	189	216	192	216
1/0	53.50	105 600	212	245	217	242	220	245
2/0	67.44	133 100	244	284	250	284	250	284
3/0	85.02	167 800	281	327	288	327	288	327
4/0	107.2	211 600	325	375	332	375	332	375
250	126.7	250 000	360	413	366	413	366	413
263	133.1	262 600	371	425	377	425	376	425
313	158.6	313 100	413	473	418	471	416	471
350	177.3	350 000	444	508	448	505	446	505
373	189.3	373 700	460	526	464	523	462	523
444	225.2	444 400	510	581	514	580	512	580
500	253.3	500 000	549	625	554	625	551	625
535	271.2	535 300	570	648	574	648	570	648
646	327.5	646 400	635	720	638	720	632	720
750	380.0	750 000	697	788	697	788	689	788
777	394.0	777 700	709	802	709	802	701	802
1000	506.7	1 000 000	805	913	808	913	798	913

Ampacities are based on operation with open-circuited shields:
a) Cable lengths should be limited to maintain a shield voltage below 25 V.
b) More than three conductors without maintained spacing requires additional derating.
c) It is recommended that single conductors be installed in a triplexed or triangular configuration to reduce electrical losses.

--`,,`-`-`,,`,,`,`,,`---
Copyright © 2002 IEEE. All rights reserved.

Copyright The Institute of Electrical and Electronics Engineers, Inc.
Provided by IHS under license with IEEE
No reproduction or networking permitted without license from IHS
Not for Resale

24.9 Ambient temperatures

The use of the various conductor insulation types should be restricted to the following maximum ambient temperatures in shipboard spaces in Table 30.

Table 30—Maximum ambient temperatures

T	PVC	50 °C
T/N	PVC/Polyamide	60 °C
E	EPR	60 °C
X	XLPE	60 °C
LSE	LSEPR	60 °C
LSX	LSXLPE	60 °C
S	Silicone	70 °C
P	XLPO	70 °C

24.10 Armored cables

Where armored cable is used, a sheath may be added over the armor for corrosion protection.

24.11 Skin effect ratio

Skin effect is a portion of the ac resistance component (YC) for calculating ampacity under engineering supervision in accordance with NFPA 70-2002.

To determine effective 60-Hz ac resistance, multiply the conductor resistance values corrected for the use temperature by the skin effect ratio in Table 31.

Table 31—Skin effects ratio, 65 °C at 60 Hz

Area in circular mil	Column 1	Column 2
Up to 3 AWG	1.000	1.00
2 and 1 AWG	1.000	1.01
1/0	1.001	1.02
2/0	1.001	1.03
3/0	1.002	1.04
4/0	1.004	1.05
250 000 kcmil	1.005	1.06
300 000	1.006	1.07
350 000	1.009	1.08

Copyright © 2002 IEEE. All rights reserved.
Copyright The Institute of Electrical and Electronics Engineers, Inc.
Provided by IHS under license with IEEE
No reproduction or networking permitted without license from IHS
Not for Resale

Table 31—Skin effects ratio, 65 °C at 60 Hz *(continued)*

Area in circular mil	Column 1	Column 2
400 000	1.011	1.10
500 000	1.018	1.13
600 000	1.025	1.16
750 000	1.039	1.21
800 000	1.044	1.23
1 000 000	1.067	1.28
1 250 000	1.102	1.39
1 500 000	1.142	-
1 750 000	1.185	-
2 000 000	1.233	-
2 500 000	1.326	-

Column 1—Use for:
a) Single-conductor nonmetallic-sheathed cable in air or nonmetallic conduit.
b) Single-conductor metallic-sheathed cable with sheath insulated in air or separate nonmetallic conduit.
c) Multiple-conductor nonmetallic-sheathed cable in air or nonmetallic conduit.

Column 2—Use for:
a) Multiple-conductor metallic-sheathed cable.
b) Multiple-conductor nonmetallic-sheathed cable in metallic conduit.
c) Two or more single-conductor nonmetallic-sheathed cables in the same metallic conduit.

NOTE—For intermediate conductor sizes, interpolation is recommended.

For close spacing such as multiconductor cables or several cables in the same conduit, there is additional apparent resistance due to proximity loss and sheath eddy-current effects. This apparent resistance varies with spacing (insulation thickness) but for most purposes can be neglected without significant error.

24.12 Circuits in the vicinity of magnetic compass

To avoid influences on the magnetic compass, no wiring or equipment that may produce stray magnetic fields and no magnetic structural material for which complete compensation cannot be made should be installed close to this compass.

In the binnacle, there should be only a single pair of conductors, twisted for their full length, and used for the binnacle light. For other wiring and equipment, the minimum distance from the magnetic compass should be approximately as follows: Wiring in the binnacle should be limited a single twisted pair of conductors used for the binnacle light.

The minimum distance for other wiring and equipment from the magnetic compass should be approximately as follows:

Copyright © 2002 IEEE. All rights reserved.

Copyright The Institute of Electrical and Electronics Engineers, Inc.
Provided by IHS under license with IEEE
No reproduction or networking permitted without license from IHS
Not for Resale

a) Single-conductor wiring should not be installed on the bridge.
b) Direct-current wiring
    1) Parallel laid twin conductors
        i) 0 to 1 A: 0.6 m
        ii) 1 to 10 A: 1.5 m
        iii) Over 10 A: 2.5 m
    2) Twisted conductors
        i) 1 to 10 A: 1.0 m
        ii) Over 10 A: 1.5 m
    3) Motors (except windshield wipers): 3.7 to 4.3 m
    4) Telephone transmitters and receivers
        i) Battery powered: 1.5 m
        ii) Sound powered: 2.1 m
    5) Loudspeakers: 3.7 m
    6) Searchlight projectors, except when made of
        i) Nonmagnetic material (see 25.1): 3.7 m
    7) Magnetically operated relays, indicators, and so on: 2.5 m
    8) Telegraphs, electric: 1.2 m
    9) Windshield wipers: 1.2 m
c) Multiple-conductor cables carrying alternating current should have no appreciable effect on the indication of the compass.

A continuous steel deck or bulkhead between the compass and any motor or other equipment will act as a magnetic shield and the above recommendations for minimum distances do not apply.

All magnetic compasses should be adjusted to meet the average operating conditions, and the effect of electric circuits in close proximity should be checked by turning them on and off during adjustment.

25. Cable installation

25.1 Single-conductor ac cables

To avoid an undesirable inductive effect in ac installations, the following precautions should be observed.

Closed magnetic circuits around single-conductor ac cable should be avoided, and no magnetic material should be permitted between cables of different phases of a circuit.

a) Single-conductor ac cables should not be located closer than 76 mm from parallel magnetic material.
b) Single-conductor ac cable should be supported on insulators. Armor, if used, should be grounded only at approximately the midpoint of the cable run.
c) Where single-conductor ac cables penetrate the bulkhead, conductors of each phase of the same circuit should pass through a common nonferrous bulkhead plate to prevent heating of the bulkhead.
d) Single-conductor cables in-groups should be arranged to minimize their inductive effect. This may be accomplished by the transposition of cables in groups of three (one each phase) to give the effect of triplexed cable. This transposition should be made at intervals of not over 15 m and need not be made in cable runs of less than 30 m.

25.2 Cable continuity and grounding

All cable should be continuous between terminations; however, splicing is permitted under certain conditions (see 25.11). For cable provided with armor, the armor should be electrically continuous between

Copyright © 2002 IEEE. All rights reserved.
Copyright The Institute of Electrical and Electronics Engineers, Inc.
Provided by IHS under license with IEEE
No reproduction or networking permitted without license from IHS
Not for Resale

terminations and should be grounded at each end (multiconductor cables only), except that for final subcircuits, the armor may be grounded at the supply end only.

25.3 Cable locations

Cable installation should avoid spaces where excessive heat and gases may be encountered such as galleys, boiler rooms and pump rooms, and spaces where cables may be exposed to damage such as cargo spaces and exposed sides of deck houses. Cables should not be located in cargo tanks, ballast tanks, fuel tanks, or water tanks except to supply equipment and instrumentation specifically designed for such locations and whose functions require it to be installed in the tank. Such equipment may include submerged cargo pumps and associated control devices, cargo monitoring, and underwater navigation systems. For cables associated with hazardous locations, see Clause 33.

Unless unavoidable, cables should not be located behind or embedded in structural heat insulation. Where cables are installed behind paneling, all connections should be readily accessible and the location of concealed connection boxes should be indicated. Cables should preferably not be run through refrigerated cargo spaces.

Cables should not be located below the faceplate of the vessel's main bottom structural members or within .6 m above any double bottom tanktop.

25.4 Cable protection

Cables should be adequately protected where exposed to damage. Cables should be secured against displacement due to vibration and fault currents. Cables passing through tanks and where exposed on weather decks where they are particularly liable to damage, such as locations in way of cargo ports, hatches, tank entry trunks, and where crossing walkways should be protected by installation in pipe, under angle iron supports, covered raceways, or equivalent means.

Where cables pass through insulation, a continuous pipe should protect them. For wiring entering refrigerated compartments, the pipe should be of heat-insulating material (fiber or phenolic tubing) joined to the bulkhead stuffing tube, or a section of such material should be inserted between the bulkhead stuffing tube and the metallic pipe.

Where cables are installed in pipes, the space factor (ratio of the sum of the cross-sectional areas corresponding to the external diameter of the cables to the internal cross sectional areas of the pipe) shall not be greater than 0.41, except for two cables, where the space factor shall not exceed 0.31. Pipes shall be so arranged or designed to prevent the accumulation of internal condensation.

25.5 Cable support and retention

Multiple cables should be supported in metal hangers or trays, arranged as far as practicable to permit painting of the adjacent structure without undue disturbance of the installation. Distribution cables grouped in a single hanger should be limited to single banking, except under the limitations in Table 25, Note 6 or Note 8. Control and signal cables should preferably be single banked, but may be double banked with other signal and control cables.

Clips or straps used for cable support should each be secured by two screws, except that clips for supporting one-cable, two-conductor 10 AWG or smaller may be of the one screw type. Metal buckles or other suitable methods should secure metallic band strapping used for cable support. Metallic band strapping used for cable support should be steel and corrosion treated if not a corrosion-resistant material. The support for all cables should be such as to prevent undue sag, but in no case should exceed the distance between frames or

Copyright © 2002 IEEE. All rights reserved.

Copyright The Institute of Electrical and Electronics Engineers, Inc.
Provided by IHS under license with IEEE
No reproduction or networking permitted without license from IHS
Not for Resale

610 mm, whichever is less. Metallic band strapping should be applied so that the cables remain tight without damage to the cable.

Metal supports should be designed to secure cables without damage to the armor or the insulation. The supports should be arranged that the cable would be supported for a length of at least 13 mm.

Cable retention devices should be installed not less than every 610 mm on vertical runs and not less than every 2.5 m on horizontal runs. At turns of horizontal runs, cable retention devices should be spaced not more than 610 mm apart. Nylon or plastic retaining devices may be used in horizontal runs where cables will not fall if the retention devices fail. When nylon or plastic cable retaining devices are employed on exterior cable runs, they should be of a type resistant to ultraviolet light (sunlight).

25.6 Cables—radius of bends

Armored cables should not be bent to a radius of less than eight times the cable's diameter. Unarmored cables may not be bent to a radius of less than six times the cable's diameter.

25.7 Cables through bulkheads, docks, beams, and so on

Watertight penetrations should be employed where cables pass through watertight decks or bulkheads.

Multicable penetrators (see 3.2.2) may be used for the passage of cables through watertight bulkheads and decks.

Where cables pass through nonwatertight bulkheads, beams, and so on, a suitable bushing should be used to prevent cable damage during installation. When the thickness of the bulkhead or web is 6 mm or more, the bushing may be omitted but the edges of the holes should be rounded.

Where cables pass through fire boundaries, arrangements should be made to ensure the integrity of the bulkhead is not impaired. Nonmetallic stuffing tubes should not be used in fire boundaries.

25.8 Cable pulling in force

Care should be taken to prevent damage to insulation or distortion of cable during installation.

The pulling force in Newtons should not exceed 0.036 times the circular mil area of the copper cross-sectional area (see Table 25) times the number of conductors in the cable when pulling on the conductors utilizing pulling eyes and bolts. Pulling force for multicore cables when utilizing eyes or bolts should not include drain or ground conductors in the copper cross-sectional area. When pulling with a basket weave grip, maximum pulling tension (per grip) should not exceed 4.5 kN, or the value calculated for eyes or bolts, whichever is greater.

The sidewall pressure should not exceed a maximum of 7.3 kN per meter of the inside radius of the bend.

Cables should not be pulled in freezing conditions. If conditions are below 0 °C, consult the manufacturer.

If it is necessary to pull in these conditions, cables should be stored at a temperature above 10 °C for 24 h prior to installation, if the cable has been previously stored in an area under 0 °C.

When installing low smoke cables, additional consideration should be given to handling and lubrication due to their possible lower tear strength and higher coefficient of friction than other marine cable.

For more guidance concerning this subject, refer to IEEE Std 576-2001.

--`,,`-`-`,,`,,`,`,,`---
Copyright © 2002 IEEE. All rights reserved.
Copyright The Institute of Electrical and Electronics Engineers, Inc.
Provided by IHS under license with IEEE
No reproduction or networking permitted without license from IHS
Not for Resale

25.9 Cable rat proofing

Cable penetration materials, such as plastic sealant and foams, should be resistant to vermin.

25.10 Holes for cables

The size of holes required for the installation of the cables for various systems should be such that they will not affect the structural strength of the various members through which they pass. However, if the size or position of the hole is such that the strength of the structural member is affected, suitable reinforcing of the structural member should be provided.

25.11 Cable splicing

25.11.1 Conditions

A cable may be spliced under the following conditions:

a) A cable installed in a structural subassembly may be spliced to a cable installed in another structural subassembly to facilitate modular construction techniques.
b) For a vessel receiving alterations, a cable may be spliced to extend a circuit.
c) A cable of exceptional length may be spliced to facilitate its installation.
d) A cable may be spliced to replace a damaged section when the remainder of the cable is determined to be in good mechanical and electrical condition.

Propulsion cable, cables for repeated flexing service, and cables in hazardous locations (see Clause 33) should not be spliced.

A cable connected in a junction box is not considered a splice.

25.11.2 Procedure

Splices should be accessible. Cable splicing should consist of a conductor connector, replacement insulation, replacement cable jacket, and, where applicable, replacement armor and shielding. Cable splices should establish electrical continuity in conductors, armor, or shields. Splicing should be performed as follows:

a) Conductors should be joined using a compression type butt connector that meets UL 486-1991. A one-cycle compression tool and proper dies should be used. A long barrel butt connector with wire stops should be used for wire sizes 10 AWG or larger.
b) Splices in multiconductor cables should be staggered in such a way that the connector for each conductor is not contiguous to the connector of an adjacent conductor. The conductor insulation should be removed no more than necessary to accept the connector.
c) Conductor replacement insulation that has the same or a greater thickness than that of the cable insulation, and the same or better thermal and electrical properties of the cable, should be applied.
d) For shielded cables, replacement shielding should be provided. Replacement elements should be secured by a method that does not exert more pressure than necessary to establish adequate electrical contact. Shielded cables should have at least a 13-mm overlap between replacement shielding material and the permanent shielding.
e) The replacement cable jacket material should have physical properties that are the same as, or equivalent to, the cable jacket. The replacement cable jacket should be centered over the splice and should overlap the existing cable jacket by at least 51 mm. The replacement cable jacket should be installed to make a watertight seal with the existing cable jacket.

Copyright © 2002 IEEE. All rights reserved.

Copyright The Institute of Electrical and Electronics Engineers, Inc.
Provided by IHS under license with IEEE
No reproduction or networking permitted without license from IHS
Not for Resale

f) Electrical continuity of any cable armor should be reestablished. A jumper of wire or braid, or replacement armor of the same metal, should be installed. For cable with a sheath over the armor, a replacement covering should be applied.

25.12 Propulsion cables

The effects of electromagnetic interference, impedance, system harmonics, short-circuit bracing, and, for voltages above 2001 V, corona should be taken into consideration when selecting cable constructions (single or multiple conductor) for electric propulsion systems.

Propulsion system cables should be run as directly as possible and in accessible locations where they can be readily inspected. Propulsion cables rated 2001 V or greater should be terminated with a stress cone or other stress-terminating device, where necessary. A propulsion cable should not be spliced. Single-conductor propulsion cables should be adequately secured to prevent displacement by short-circuit conditions.

Propulsion system power cables interconnecting generators, main switchboards, main transformers, static power converters, and motors should be separated from ship service, control, and signal cables by at least 610 mm to reduce radiated electromagnetic interference.

If required for harmonic attenuation, propulsion cables should be armored or shielded and of the types identified in Clause 24 and Clause 25. Cables should be sized to provide 105% of motor- and drive-rated current continuously and 125% of rated current for 10 min. Voltage drop should not exceed 5%.

26. Interior communications systems

26.1 General

Each required interior communication system (voice, data, control, or alarm) should be designed and installed to provide clear, distortion-free, and uninterrupted operation under all operating conditions. Refer to 9.9 for requirements for communication equipment integrated into control and alarm systems. Interior communication system power sources should be in accordance with emergency power and lighting systems. Communications data may be conveyed by electrical (copper) or fiber-optic conductors.

All components should function continuously without adverse effect when supplied, with power having the characteristics described in Table 4.

All enclosures for use in essential circuits should be watertight. Other enclosures installed in exposed or wet locations, machinery spaces, galleys, and similar locations should also be watertight. Enclosures for nonessential interior communication circuits (e.g., entertainment systems) when installed in dry locations may be dripproof. Each terminal should be identified, and each individual wire should be marked at the terminal. When more than one voltage level is found in an enclosure, conductors of differing voltages should be kept separated as much as practicable. All voltages within an enclosure should be indicated, and recommended creepage distances observed Each enclosure should be of a corrosion-resistant material, and nonmetallic enclosures should be flame- and impact-resistant.

All indicators and controls should be installed to provide for operational accessibility, serviceability, visibility, and mechanical protection. Each installation should not hinder the operation or the accessibility of other equipment. Vibration mounting of equipment should be considered where necessary due to abnormal conditions at the installed location.

Copyright © 2002 IEEE. All rights reserved.
Copyright The Institute of Electrical and Electronics Engineers, Inc.
Provided by IHS under license with IEEE
No reproduction or networking permitted without license from IHS
Not for Resale

The various instruments should be constructed and selected to meet the service conditions. Enclosures for each control and indicator instrument should provide adequate protection against mechanical damage and ingress of liquid and foreign particles. (See 3.7.)

Each alarm signal should be an electrically operated bell, klaxon, or other warning device capable of producing an audible signal. Audible alarms utilizing electronic devices may also be considered. Enclosures for each audible alarm should be appropriate for the service intended and the location in which it is installed. Visual alarms may be considered in addition to any audible alarms. For high noise areas, audible alarms shall be supplemented by visual alarms. Refer to 9.10 for additional requirements for machinery alarms. All actuating devices (contact makers, pushbuttons, etc.) should be readily accessible for operation and clearly labeled as to function. Each device enclosure should be appropriate for the service intended and the location in which it is installed.

All equipment should be equipped with a suitable nameplate giving important information, such as system identification, manufacturer's name and model and equipment identification (model, catalog number, etc.), operating voltage, maximum current rating, and degree of enclosure (e.g., NEMA or IP rating).

26.2 Engine order telegraph system

Definitions: (a) Indicator means an instrument in the engine room to receive and acknowledge engine orders, and (b) Transmitter means an instrument to send engine orders to the engine room and receive acknowledgment from the engine room

Every self-propelled vessel, except vessels with propulsion plants controlled from the navigating bridge, and with no means of normal engine control from the engine room, should be equipped with an electric or mechanical engine order telegraph (EOT) system to convey orders from the navigating station to each engine control station. EOT systems on multiple control stations must be separate and independent. Engine order telegraph and remote propulsion control systems must be electrically separate and independent, except that a single mechanical operator control device with separate transmitters and connections for each system may be used. Failure of a system shall not affect operation of the other.

EOT transmission of orders to the engine control station(s) and replies to the navigating bridge should be instantaneous, accurate, and unambiguous under all conditions of ambient light and weather. EOT indicators at each station should show the direction and speed ordered and answered. A typical list of EOT orders are

a) Full ahead
b) Half ahead
c) Slow ahead
d) Dead slow ahead
e) Standby
f) Stop
g) Finished with engine
h) Navigating bridge control (for vessels with navigating bridge propulsion control)[24]
i) Dead slow astern
j) Slow astern
k) Half astern
l) Full astern

[24]For navigation bridge control, the use of a graduated scale (e.g., 0 to 10 ahead, 0 to 10 astern) in addition to the listed orders is also acceptable.

Copyright © 2002 IEEE. All rights reserved.

Copyright The Institute of Electrical and Electronics Engineers, Inc.
Provided by IHS under license with IEEE
No reproduction or networking permitted without license from IHS
Not for Resale

The navigating bridge and engine control station EOT units may be operated by lever, knob, pushbuttons, or other equivalent means of control. The arrangement of EOT controls must relate to the desired direction of motion of the vessel, (e.g., ahead orders to the bow, etc.)

There must be an audible signal at each instrument. The signal at both locations must sound continuously when the transmitter and the indicator do not show the same order. The alarm signals at all locations must sound continuously until the condition is corrected. Such alarm features should be suppressed when propulsion control is assigned to the navigating bridge.

Except for a transmitter in an unattended navigating bridge on a double-ended vessel, each electrically operated EOT transmitter must operate under the control of a transmitter transfer control so that movement of any one transmitter handle automatically connects that transmitter electrically to the engine room indicator and simultaneously disconnects electrically all other transmitters. The reply pointers of all transmitters must operate in synchronism at all times. On a double-ended vessel that has two navigating bridges, a manually operated transfer switch that will disconnect the system in the unattended navigating bridge should be provided. On transfer, an alarm should sound at every station. The reply should be indicated at all transmitters at all times.

Telegraph instruments exposed to the weather should have NEMA 4X or IP 56 enclosures of corrosion-resistant material and include heaters to prevent the formation of condensation. EOT equipment mounted in consoles located in enclosed spaces should be at least NEMA 2 or IP 22. Engine control station instruments should be mounted as near to the operating station as possible.

The propulsion local control station (engine room) should be capable of assuming control at all times and should be capable of blocking orders from other associated remote control stations. Control transfer features should be included to ensure smooth thrust transition during EOT control transfer evolutions.

Each electrical EOT should include audible and visual alarms to automatically alarm loss of power or control of the EOT system. A means to reduce the audible alarm tone by no more than 3 dB may be provided.

Each mechanical EOT system shall consist of transmitters and indicators mechanically connected to each other, as by means of chains and wires. Each transmitter and each indicator must have an audible signal device to indicate, in the case of an indicator, the receipt of an order and, in the case of a transmitter, the acknowledgment of an order. The audible signal device must not be dependent on any source of power for operation other than from the movement of the transmitter or indicator handle. If more than one transmitter operates a common indicator in the engine room, all the transmitters must be mechanically interlocked and operate in synchronism. A failure of the transmission wire or chain at any transmitter must not interrupt or disable any other transmitter.

Each vessel with navigating bridge throttle control must have a positive mechanical stop on each telegraph transmitter that prevents movement to the “Navigating Bridge Control” position without positive action by the operator.

26.3 Rudder angle indicator

An independent signal system for transmitting the position of the rudder should be provided. The system transmitter should be separate and independent of transmitters for steering control system feedback. The transmitter should be located at the rudder head and actuated by the movement of the rudder, and the angular movements should be indicated on the navigating bridge, and bridge wings, and other appropriate locations. Indicators located on the navigating bridge and at the after steering station (where provided) should be illuminated. Indicators should be located at each steering station. See Clause 32.

Copyright © 2002 IEEE. All rights reserved.
Copyright The Institute of Electrical and Electronics Engineers, Inc.
Provided by IHS under license with IEEE
No reproduction or networking permitted without license from IHS
Not for Resale

26.4 Refrigerated and cold storage alarm system

Signal and communication equipment, except as noted in the following paragraphs of this subclause, should not be located in refrigerated spaces nor located where affected by such spaces.

A locked-in alarm should be provided for refrigerated and cold storage spaces that can be locked so that they cannot be opened from the inside. The actuator for the locked-in alarm should be located inside at the exit. The locked-in alarm signal shall be located in a space where persons are present at all times. The alarm should be both visual and audible. The signal and the actuator should be provided with nameplates to indicate the function.

An actuating control element for the refrigeration system, such as a thermal bulb or thermocouple, which initiates an operation, may be in the space.

26.5 General emergency alarm system

A general emergency alarm system shall be provided in accordance with the requirements of this subpart on all vessels over 100 gross tons except barges, scows, and similar vessels. 46 CFR 113.25-25 applies to each manned ocean and coastwise barge of over 100 gross tons if the crew is divided into watches for the purpose of steering. 46 CFR 113.25-30 applies to each barge of 300 or more gross tons that has sleeping accommodations for more than six persons.

26.5.1 The general emergency alarm system

It shall be achieved by a device capable of producing a signal or tone distinct from any other audible signal on the vessel using either one of the following systems:

a) An electromechanical decentralized system consisting of a bell, klaxon, or other warning device with contact makers, branch and feeder distribution panels, and so on.
b) An electronic distributed system consisting of a supervised public address system in full compliance with 26.7.2 with a master control station, loudspeakers, and tone generators.

Using either of the systems, item a) and item b) in the previous paragraph, shall produce an alarm tone that is 80 dB(A) in interior and exterior spaces and at least 10 dB(A) above ambient noise levels existing during normal equipment operation, with the vessel underway in moderate weather. This sound level must be achieved in all locations of identified spaces with all normally closed doors and accesses closed.

The public address system shall be installed with regard to acoustically marginal conditions and not require any action from the addressee. With the vessel underway in normal conditions, the minimum sound levels for broadcasting emergency announcements shall be as follows:

— In interior spaces, 75 dB(A) or, if the background noise level exceeds 55 dB(A), then at least 20 dB(A) above maximum background noise level.
— In exterior spaces, 80 dB(A) or, if the background noise level exceeds 65 dB(A), then at least 15 dB(A) above maximum background noise level.

26.5.2 The general emergency alarm signal

The general emergency alarm signal shall be located in passenger and crew quarters areas to alert persons in spaces where they may be maintaining, repairing, or operating equipment, stowing or drawing stores or equipment, or transiting, such as public spaces, work spaces, machinery spaces, workshops, galleys, emergency fire pump room, bow thruster rooms, storage areas for paint, rope, and other stores, under deck

Copyright © 2002 IEEE. All rights reserved.

Copyright The Institute of Electrical and Electronics Engineers, Inc.
Provided by IHS under license with IEEE
No reproduction or networking permitted without license from IHS
Not for Resale

passageways in cargo areas, steering gear rooms, windless rooms, holds of roll-on/roll-off vessels, and, except those that are accessible only through bolted manhole covers, duct keels with valve operators.

26.5.3 Electromechanical systems

If the general emergency alarm system is an electromechanical system, it must be initiated by a contact maker.

26.5.3.1 Contact maker characteristics

Each contact maker shall

a) Have normally open contacts and be constructed in accordance with NEMA 250 Type 4 or 4X or IEC IP 56 requirements
b) Have a switch handle that can be maintained in the “on” position
c) Have the “off” and “on” positions permanently marked
d) Have an inductive load rating not less than the connected load or, on large vessels, have auxiliary devices to interrupt the load current

26.5.3.2 Contact maker locations

Contact makers shall be located as follows.

Each passenger vessel, cargo vessel, and miscellaneous vessel shall have a manually operated contact maker for the general emergency alarm system:

— In the navigating bridge
— At the feeder distribution panel if the general alarm power supply is not in or next to the navigating bridge

Each tank vessel shall have a manually operated contact maker for the general emergency alarm system:

— In the navigating bridge
— At the deck officers’ quarters farthest from the engine room
— In the engine room
— At the location of the emergency means of stopping cargo transfer
— At the feeder distribution panel if the general alarm is an electromechanical architecture and the power supply is not in or next to the navigating bridge

Each mobile offshore drilling unit shall have a manually operated contact maker for the general emergency alarm system:

— In the main control room
— At the drilling console
— At the feeder distribution panel
— In the navigating bridge, if a navigating bridge is installed
— In a routinely occupied space that is as far as practicable from all other contact makers

All vessels shall not have more than one other contact maker that operates the general emergency alarm system in addition to those required in the previous paragraphs unless the installation of other contact makers has been accepted by the authority having jurisdiction.

If a vessel has an emergency squad when operating, has a manual fire alarm system, or is an ocean-going passenger vessel, it shall have an independent manually operated contact maker in the navigating bridge that

--`,,`,,`,,`,,`,,`---

Copyright © 2002 IEEE. All rights reserved.
Copyright The Institute of Electrical and Electronics Engineers, Inc.
Provided by IHS under license with IEEE
No reproduction or networking permitted without license from IHS Not for Resale

is connected to operate only the general emergency alarm signal in crew's quarters and machinery spaces or a separate alarm system that sounds in the crew's quarters and machinery spaces.

If the general emergency alarm system is an electronic distributed system, it may be initiated by a master control station in conjunction with contact makers as identified as follows.

Each master control station shall conform with the Public Address subclause 26.7.2 with a minimum of four different and distinct alarm tones.

26.5.4 Master control stations

Each master control station shall be located as follows.

Each passenger vessel, cargo vessel, and miscellaneous vessel shall have a master control station for the general emergency alarm system in the following locations:

— In the navigating bridge
— In the EOS

The following location may use a contact maker in exchange for the master control station:

— At the public address main equipment rack

Each tank vessel shall have a master control station for the emergency alarm system in the following locations:

— In the navigating bridge
— In the EOS

The following locations may use a contact maker in exchange for the controlhead:

— At the deck officers' quarters farthest from the engine room
— At the location of the emergency means of stopping cargo transfer
— At the public address main equipment rack

Each mobile offshore drilling unit shall have a master control station for the general emergency alarm system in the following locations:

— In the navigating bridge, if a navigating bridge is installed
— In the main control room

The following locations may use a contact maker in exchange for the master control station:

— At the drilling console
— At the public address main equipment rack
— In a routinely occupied space that is as far as practicable from all other contact makers or the master control station

All vessels must not have more than one other contact maker that operates the general emergency alarm system in addition to those required in the previous paragraphs unless the installation of other contact makers has been accepted by the Commandant.

If a vessel has an emergency squad when operating, has a manual fire alarm system, or is an ocean-going passenger vessel, it shall have an independent manually operated contact maker in the navigating bridge that

Copyright © 2002 IEEE. All rights reserved.

Copyright The Institute of Electrical and Electronics Engineers, Inc.
Provided by IHS under license with IEEE
No reproduction or networking permitted without license from IHS
Not for Resale

is connected to operate only the general emergency alarm signal in crew's quarters and machinery spaces or a separate alarm system that sounds in the crew's quarters and machinery spaces.

26.5.5 Power supply

The power supply for the general emergency alarm system shall be in accordance with the following:

— The power supply for the general emergency alarm system shall meet the requirements of SOLAS 74, regulations III-6.4.2 and III/50.
— The emergency power source for the general emergency alarm system must meet the requirements of SOLAS 74, regulation II-1/42 or II-1/43, as applicable.

26.5.6 Power supply overcurrent protection

If the general emergency alarm system is the only load supplied by the general emergency alarm system battery or batteries, the battery or batteries must have an enclosed fused switch or circuit breaker that has a locking mechanism. The fused switched or circuit breaker shall be outside of, and next to, the battery room or battery locker, and the capacity of the fuses or circuit breaker shall be at least 200% of the connected load.

If the general emergency alarm system is supplied from an emergency or interior communication switchboard, there must be a fused switch or circuit breaker supplying the general emergency alarm system that has a locking mechanism.

26.5.7 Distribution of the general emergency alarm

The distribution of the general emergency alarm shall be accomplished as follows.

26.5.7.1 Electromechanical architecture

If the general emergency alarm system is electromechanical architecture, distribution shall be accomplished by feeder and branch circuit panels and circuits in accordance with the following:

a) Each system shall have a feeder distribution panel to divide the system into the necessary number of zone feeders, except where the arrangement of the vessel requires only one zone feeder, a branch circuit distribution panel, or feeder distribution panel.
b) The feeder distribution panel shall have overcurrent protection for each zone feeder, and there shall be no disconnect switches. Each overcurrent protection device shall cause as wide a differential as possible between the rating of the branch circuit overcurrent protection device and that of the feeder overcurrent protection device, be as near practicable to 200% of the load supplied, and the capacity of a branch circuit overcurrent device shall not be higher than 50% of the capacity of the feeder over-current device.
c) The feeder distribution panel shall be in an enclosed space next to the general alarm power supply.
d) Each system shall have at least one feeder for each vertical fire zone that has a general emergency alarm signal.
e) Each system shall have one or more branch circuit distribution panels for each zone feeder, with at least one fused branch circuit for each deck level. The distribution panel shall be above the uppermost continuous deck, in the zone served, and there shall be no disconnect switches for the branch circuits.
f) Each distribution panel shall be watertight and secured by a tool to open and close.
g) A branch circuit shall not supply emergency alarm signals on more than one deck level, except for a single branch circuit supplying all levels of a single space containing more than one deck level if all other requirements of this subsection are met.

Copyright © 2002 IEEE. All rights reserved.
Copyright The Institute of Electrical and Electronics Engineers, Inc.
Provided by IHS under license with IEEE
No reproduction or networking permitted without license from IHS
Not for Resale

h) On a vessel not divided into fire zones by main vertical fire bulkheads, the general emergency alarm system shall be arranged into vertical service zones not more than 40 m long, and there shall be a general alarm feeder for each zone that has general emergency alarm signal.
i) General alarm feeders and branch circuit cables shall be in passageways and shall not be in state-rooms, lockers, galleys, machinery spaces, or other enclosed spaces, unless it is necessary to supply general emergency alarm signal in those spaces.

26.5.7.2 Electronic distributed system

If the general emergency alarm system is an electronic distributed system that consists of a public address system in full compliance with 26.7.2 that is supervised to provide an alarm for a short, open, or ground on any speaker run and disconnects the faulty speaker run from the system, eliminating the troubled run from causing any interference to another speaker run, then feeder and branch circuit distribution panels are not required. In this case, individual speaker runs that are divided throughout the vessel by deck, fire zone, and paging circuit will accomplish the distribution of the general emergency alarm signal.

Audible alarms for system failure can be silenced, but they shall recur hourly in order to ensure system stability. Failure indication may only be permanently silenced by remedy.

In a space where general emergency alarm is required, but the signal cannot be heard over the background noise, there shall be a red, watertight rotating beacon, in addition to the general emergency alarm signal that

— The rotating beacon shall have sufficient intensity above the background lighting that would alert personnel.
— The rotating beacon shall operate whenever the general emergency alarm signal in the space is activated.
— A red rotating beacon is supplied by the general emergency alarm system power supply or the vessel emergency power source through a relay that is operated by the general emergency alarm system.
— A red rotating beacon shall be installed so that it is visible in the cargo pump rooms of vessels that carry combustible liquid cargos. The installation must be in accordance with rules associated with installation of equipment in hazardous areas.

Each cable entrance to an emergency alarm signal or distribution fitting must be made watertight by a terminal or stuffing tube. Each connection box must be constructed in accordance with NEMA 250 Type 4 or 4X or IEC IP 56 requirements.

Equipment associated with the general emergency alarm equipment shall be marked as follows:

— Each general emergency alarm system feeder and distribution panel shall have a fixed nameplate on the outside of its cover with a description of its function. The rating of fuses shall also be shown on the outside of the cover.
— Each general alarm contact maker shall be marked “GENERAL ALARM” in red letters on a corrosion-resistant plate or equipment.
— A contact maker that operates only the general emergency alarm signal in crew quarters, machinery spaces, and workspaces shall be marked “CREW ALARM” by the method described in accordance with the previous item.
— Each general emergency alarm signal must be marked “GENERAL ALARM-WHEN EMERGENCY ALARM SIGNAL SOUNDS GO TO YOUR STATION” in red letters at least 1/2 inch high.
— Each general emergency alarm system distribution panel shall have a directory attached to the inside of the enclosure cover giving the designation of each circuit, the area supplied by each circuit, and the rating of each circuit fuse.

Copyright © 2002 IEEE. All rights reserved.

Copyright The Institute of Electrical and Electronics Engineers, Inc.
Provided by IHS under license with IEEE
No reproduction or networking permitted without license from IHS
Not for Resale

The general emergency alarm system for a manned ocean or coastwise barge of more than 100 gross tons, if it is one that operates with the crew divided into watches for steering the vessel, shall

— Have an automatically charged battery as the power source
— Have a manually operated contact maker at the steering station and in the crew accommodation area
— Shall meet the requirements of 46 CFR 113.25-25

The general emergency alarm system for a barge of 300 or more gross tons with sleeping accommodations for more than six persons shall meet the requirements of 46 CFR 113.25-30 except as follows:

— The number and location of contact makers shall be determined by the design, service, and operation of the barge
— If a distribution panel cannot be above the uppermost continuous deck because of the design of the barge and is installed below the deck, it shall be as near the deck as practicable

NOTE—Contact makers in the primary work area, quarters area, galley and mess area, machinery spaces, and the navigating bridge or control area should be considered.

26.6 Alarm system for lubricating oils, refrigeration, and other fluid systems

Whenever a fluid system is installed, the functioning of which affects the operation of vital ship's equipment or the safety of life, such as lubricating oil systems for prime movers, cooling water systems, and refrigerating systems, a dedicated alarm for each system should be installed.

For fluid systems supplying essential equipment, the alarm system should indicate audibly and visibly at the central operating station or other location where persons are always present, when fluid temperature or pressure is outside of the normal operating range. Additionally, another alarm should be provided at the point at which automatic shutdown occurs due to low lube oil pressure or high coolant temperature. The set points should be selected to provide a warning for as long as possible before shutdown occurs, without excessive false warnings.

In a fully automatic chilled-water refrigerating system, an alarm should be set to sound and shutdown the refrigerating machinery when the pressure in the circulating water system reaches a predetermined low pressure, upon failure of the refrigeration system.

26.7 Voice communication systems

Voice communication systems typically include sound-powered (or equivalent) systems, public address/general announcing/talkback systems, and dial telephone systems.

26.7.1 Sound-powered telephones (or other equivalent) systems

Each vessel shall be equipped with a reliable emergency sound-powered telephone communication system, or other system not dependent on ship power or battery power for providing a means of two-way voice communication. The system shall be of the selective ringing, common talking type.

Reliable voice communication equipment is defined as equipment that shall be independent from the ship's electrical power, or battery power, and multiple stations shall be able to communicate at the same time. The loss of one system component shall not disable the rest of the system, and the system shall be able to operate under full load not limited to a specific time period.

The emergency communication system shall provide a common means of two-way communication and calling, as given in the following subclauses of 26.7 as they apply to the vessel.

Copyright © 2002 IEEE. All rights reserved.
Copyright The Institute of Electrical and Electronics Engineers, Inc.
Provided by IHS under license with IEEE
No reproduction or networking permitted without license from IHS
Not for Resale

26.7.1.1 Means of communication

Each vessel shall have a means of communication among the following:

- Navigating bridge
- Steering gear room, if outside the engine room
- Alternative steering station if outside of the steering gear room
- Engine control room, if the vessel has an engine control room
- Maneuvering platform, if the vessel has no engine control room
- Control room, if the vessel is a mobile offshore drilling unit
- The engineering officers' accommodations, if the vessel has a periodically unattended engine room
- Emergency control stations
- Muster stations
- Embarkation stations
- Captain's office
- Captain's stateroom
- Chief Engineer's office
- Chief Engineer's stateroom
- Emergency power room
- Carbon dioxide (or other extinguishing agent) control room
- Fire pump room

26.7.1.2 Communications—special requirements

As applicable, vessels shall also have communications as follows:

- Each vessel that has a master gyrocompass that is not in or next to the navigating bridge shall have a means of communication between the master gyrocompass and the navigating bridge repeater compass.
- Each vessel that has a radar plan position indicator that is not in or next to the navigating bridge shall have a means of communication between the navigating bridge and the radar plan position indicator.
- Each vessel equipped with a fire or smoke detecting system, if control units are not in the navigating bridge, shall have a means of communication between the navigating bridge and the stations where the control units are located.
- Each vessel shall have a means of communication between the navigating bridge and the bow or forward lookout station unless direct voice communication is possible.
- Each non-self-propelled mobile offshore drilling unit shall have a means of communication among the control room, drill floor, machinery space, and silicon-controlled rectifier (SCR) room (if installed). Each column-stabilized mobile offshore drilling unit shall have a means of communication between the ballast control room and the spaces that contain the ballast pumps and valves.

26.7.1.3 Communications—emergency lockers and spaces

If the emergency equipment lockers or spaces used by the emergency squad are not next to the navigating bridge or, on a mobile offshore drilling unit, next to the control room, there shall be a means of communication between the navigating bridge or control room and the emergency equipment lockers or spaces.

26.7.1.4 Separate communications circuit requirements

The following means of communication shall be on a circuit that is separate from any other circuit required by this subclause:

Copyright © 2002 IEEE. All rights reserved.

Copyright The Institute of Electrical and Electronics Engineers, Inc.
Provided by IHS under license with IEEE
No reproduction or networking permitted without license from IHS
Not for Resale

Communication to the radio room shall meet the following requirements:

a) Each vessel that has a radio installation shall have a means of communication among the radio room, the navigating bridge, or, if the vessel is a mobile offshore drilling unit, the control room, and any other place from which the vessel may be navigated under normal conditions, other than a place that is only for emergency functions, a place that is only for docking or maneuvering, or a place that is for navigating the vessel in close quarters. A location that has the apparatus that is necessary to steer the vessel, give engine orders, and control the whistle is a place from which the vessel may be navigated.
b) If the operating position of the emergency radio installation is not in the compartment normally used for operating the main radio installation, there shall be means of communication between the emergency radio room, the navigating bridge, or, if the vessel is a mobile offshore drilling unit, the control room, and any other place from which the vessel may be navigated under normal conditions; other than a place that is only for emergency functions, a place that is only for docking or maneuvering, or a place that is for navigating the vessel in close quarters.
c) The communication system required by this paragraph shall be independent of all other systems on the vessel. The location of the termination of these systems is subject to approval by the Federal Communications Commission.

26.7.1.5 Communication from navigating bridge

The following means of communication shall be on a circuit that is separate from any other circuit required by this subclause:

Each self-propelled vessel equipped with control from the navigating bridge shall have a sound powered telephone or equivalent means to communicate between the propulsion local control station and the engine control room, unless an engine order telegraph is installed at the local control station.

26.7.1.6 General requirements

a) The communications stations listed in 26.7.1.1, 26.7.1.2, and 26.7.1.3 shall not be on the same circuit as communications stations installed to meet the requirements of 26.7.1.4 and 26.7.1.5.
b) If a communications station is in the weather and on the same circuit as other required stations, there shall be a cutout switch on the navigating bridge that can isolate this station from the rest of the stations, unless the system possesses other effective means of station isolation during a fault condition.
c) Jack boxes or headsets shall not be the only devices provided for a station on a communications station required by this subpart, except for a station installed to meet 26.7.1.3 or 26.7.1.5.

26.7.1.7 Detailed requirements

The emergency communication system shall comprise fixed equipment, independent of the vessel's electrical system and constructed in accordance with the following:

a) Each communication station device shall include a permanently wired handset with a push-to-talk button and a hanger for the handset, except those stations detailed in item d) of this subclause. The hanger shall be constructed so that it holds the handset away from the bulkhead and so that the motion of the vessel will not dislodge the handset.
b) Each voice communication station device in the weather shall be in a proper enclosure as required in ABS Rules for Building and Classing Steel Vessels, table 4/5B.1, or appropriate NEMA 250 Type enclosure for the service intended. The audible and or visual signal device shall be outside the station enclosure.
c) Each station in a navigating bridge or a machinery space shall be in an enclosure meeting at least NEMA 250 Type 2 or IEC IP 22 requirements.

Copyright © 2002 IEEE. All rights reserved.
Copyright The Institute of Electrical and Electronics Engineers, Inc.
Provided by IHS under license with IEEE
No reproduction or networking permitted without license from IHS
Not for Resale

d) In a noisy location, such as an engine room, there shall be an acoustic booth or other sound absorbing equipment to permit reliable voice communication during vessel operation.
e) In a location where the voice communication station audible signal device cannot be heard throughout the space, there shall be an additional audible signal device or visual signal device, such as a rotating light, which is energized from the final emergency bus.
f) If two or more voice communication stations are near each other, there shall be a means that indicates the station called.
g) Each voice communication talking circuit shall be electrically independent of each calling circuit. A short-circuit, open circuit, or ground on either side of a calling circuit shall not affect a talking circuit. Circuits shall be insulated from ground.
h) Each connection box shall meet at least NEMA 250 Type 4 or 4X or IEC IP 56 requirements.
i) Voice communication cables shall run as close to the fore and aft centerline of the vessel as practicable. The cable shall not run through high fire-risk spaces, such as machinery rooms and galleys, unless it is technically impractical to route them otherwise or they are required to serve circuits in the high-risk area. Cable running through or into these high-risk areas shall meet the requirements of IEC 60331.
j) The voice communication stations shall include a means of internal illumination for operating the equipment in low-light areas or areas that are not illuminated in darkened ship conditions.

26.7.2 Public address/general announcing/talkback systems

Each vessel required to have a general emergency alarm shall also have an amplifier-type public address announcing system to supplement the alarm.

26.7.2.1 General requirements

a) Each vessel shall have an amplifier-type announcing system that will supplement the general emergency alarm. This system shall provide for the transmission of orders and information throughout the vessel via loudspeakers connected through a redundant amplifier system. This system shall be capable of interfacing with the general emergency alarm and fire detecting and alarm systems. See 26.5 and 28.4 for details of required interface. The public address system shall be protected against unauthorized use.
b) Input to the public address system shall be by both the master control station and the dial telephone system. The master control station shall operate the system as follows:
    1) Public address announcements, including zone paging and all call paging, shall be possible from the master control station.
    2) The master control station shall have provisions to initiate a minimum of four different distinct alarms tones.
    3) The system shall allow for the ability to prioritize announcements, emergency announcements, and alarms.
    4) System status shall be monitored and alarms shall be generated at the master control station when the system detects speaker run or amplifier trouble. The alarm shall be both visual and audible. Audible alarms shall have the ability to be silenced, but shall recur hourly in order to ensure system stability. Fault indication may only be permanently silenced by remedy.
    5) The master control station shall include individual back-illuminated pushbuttons for each paging, talkback, alarm, and alarm monitoring function. These pushbuttons shall be singular in function and not require the user to operate more than one button to activate a single function.
    6) If a dial telephone system is provided on the vessel, it may be desirable to integrate the master control station with the PBX such that it provides full function of a dial telephone extension, including the ability to make station-to-station calls as well as access the trunk lines.
c) There shall be a means to silence all other audio distribution systems during an announcement or alarm.
d) The system shall be arranged to allow broadcasting separately to, or to any combination of, various areas on the vessel. If the amplifier system is used for the general emergency alarm required by 26.5,

Copyright © 2002 IEEE. All rights reserved.

Copyright The Institute of Electrical and Electronics Engineers, Inc.
Provided by IHS under license with IEEE
No reproduction or networking permitted without license from IHS
Not for Resale

the operation of a general emergency alarm shall activate all speakers in the system, except that a separate crew alarm may be used as allowed by 26.5.7.2.

e) The system shall be constructed so that the amplifiers, power supplies, and any device used to produce the general emergency alarm signal shall be supplied in duplicate, such that continuous operation is not affected by the failure of any single component.
f) The power supply shall be in accordance with the requirements of 26.5.5.
g) Each electrical subsystem in a weather location shall be watertight or in a watertight enclosure (NEMA 250 Type 4 or 4X or IEC IP 56 enclosure).

26.7.2.2 Passenger vessels

Each passenger vessel shall have a public address system capable of broadcasting both separately and collectively from the navigating bridge to the following stations:

a) Survival craft stations, port
b) Survival craft stations, starboard
c) Survival craft embarkation stations, port
d) Survival craft embarkation stations, starboard
e) Public spaces used for passenger assembly areas
f) Crew quarters
g) Accommodation spaces and service spaces

26.7.2.3 Loudspeakers

a) Loudspeakers shall be located to eliminate feedback or other interference, which would reduce the quality of communications.
b) Loudspeakers shall be located to provide intelligible and audible one-way communication throughout the vessel. Weather deck loudspeakers shall be suitably protected from the effects of the wind and seas.
c) The public address system shall be installed with regard to acoustically marginal conditions and not require any action from the addressee. With the vessel underway in normal conditions, the minimum sound levels for broadcasting emergency announcements shall be as follows:
    1) In interior spaces, 75 dB(A) or, if the background noise level exceeds 55 dB(A), then at least 20 dB(A) above maximum background noise level.
    2) In exterior spaces, 80 dB(A) or, if the background noise level exceeds 65 dB(A), then at least 15 dB(A) above maximum background noise level.
d) Loudspeakers shall not have external volume controls or local cutout switches unless the volume control or local cutout switches can be overridden in the event of a general alarm or emergency voice announcement and set at full volume.

26.7.2.4 Public address system supervision

The public address system shall be supervised so that the system provides an alarm at the master control station for a short, open, or ground on any speaker run and disconnects the faulty speaker run from the system, thus eliminating the troubled run from causing any interference to another speaker run. The distribution of the public address system shall be accomplished by individual speaker runs that are divided throughout the vessel by deck, fire zone, and paging circuit so that if a paging circuit was required on more than one deck and fire zone location, each would require a separate speaker run.

a) The public address system shall be divided into the necessary number of speaker runs to provide the vessel with individual speaker runs for each deck, fire zone, and paging group.
b) The main equipment rack shall be in an enclosed space next to the public address system power supply, above the uppermost continuous deck, and there shall be no disconnect switches for individual speaker runs.

Copyright © 2002 IEEE. All rights reserved.
Copyright The Institute of Electrical and Electronics Engineers, Inc.
Provided by IHS under license with IEEE
No reproduction or networking permitted without license from IHS
Not for Resale

c) A speaker run shall not supply speakers on more than one deck level, except for a single speaker run supplying all levels of a single space if all other requirements of this subclause are met.
d) On a vessel not divided into vertical fire zones by main vertical fire bulkheads, the vessel shall be divided into vertical zones not more than 40 m long.[25] There shall be a speaker run for each of these zones, for each level and paging group as required.
e) Speaker run cables shall be in passageways. They shall not be in staterooms, lockers, galleys, or machinery spaces, unless it is necessary to supply public address speakers in those spaces.

26.7.2.5 Talkback systems

A talkback type amplifier and loudspeaker system may be employed for communications between the navigating bridge and locations such as the survival craft, fueling, or mooring stations. The talkback system enables communication to the navigating bridge, after pushing a button to transmit. Components for this system need not be supplied in duplicate. Components located in the weather shall be watertight or in a watertight enclosure.

A wireless headset may be employed for public address access in high noise areas. The general alarm or emergency signalling system shall be audible over the wireless headset system.

26.7.3 Dial telephone systems

Dial telephone systems and equipment shall be suitable for marine use. Telephones may be bulkhead, panel (surface or flush mount), or desk type. Telephones exposed to weather or hazardous locations shall be suitable for the location.

The power source for the central power and switching unit (PBX switch) shall be in accordance with the recommendations in this clause. The PBX switch shall, as a minimum, be dripproof or in a dripproof enclosure, and be readily accessible.

The dial telephone system shall be capable of two-way voice communications, transmitting and receiving data (e.g., fax and modem). It should be able to interface with commercial landline systems, public address systems, commercial satellite communications, and cellular telephone systems as required.

27. Exterior communication and navigation systems

27.1 General

These systems include electrical, electronic, and electromechanical devices intended for the purposes of vessel navigation and communication to and from the vessel. These systems transmit or receive radio frequency audio and data signals. Global Maritime Distress and Safety System (GMDSS) installation replaces or supplements traditional radio room equipment and is required on all vessels.

27.2 Safety

As components of these systems often have dangerous voltage levels or emit hazardous electromagnetic energy, the following safety precautions should be observed:

a) Suitable guards, disconnect devices, and warning signs should be provided to prevent personnel from coming into contact with or being exposed to dangerous voltages or electromagnetic energy.

[25](131 ft)

Copyright © 2002 IEEE. All rights reserved.

Copyright The Institute of Electrical and Electronics Engineers, Inc.
Provided by IHS under license with IEEE
No reproduction or networking permitted without license from IHS
Not for Resale

b) Interconnecting cables, waveguides, coaxial cables, and connectors should provide satisfactory electrical connections while precluding personnel from coming in contact with any energized leads or pins.
c) Antenna base and feedthrough insulators should be installed to protect personnel from accidental shock, and to prevent arcing to adjacent structures.
d) Proper grounding and bonding practices should be employed to protect personnel from accidental chassis potentials and to avoid the presence of ground loops (see 5.9.6).
e) Warning signs should be placed near all emitting antennas providing information regarding safe distances. (One possible method is to indicate the distance at which radiation levels of 100 W/m², 25 W/m², and 10 W/m² exist.)
f) Provisions should be made for lock-out and tagging of securing primary power to equipment.

27.3 General installation guidelines

All materials, devices, equipment, and installation material and practices should be suitable for marine use. All equipment should be located and installed in a manner that will provide for adequate ventilation, equipment security, physical protection, and operational and maintenance accessibility, with easy connection to auxiliary equipment and adequate ventilation, and that will minimize the effects of electromagnetic radio/audio interference. Installation should also minimize interference with night vision from light sources and daytime glare. High-voltage components should be adequately shielded. Where practical, receiving and transmitting equipment should be physically separated. Orientation of equipment should be in accordance with the manufacturer's recommendations.

Navigation and communication equipment should be installed with regard to functionality. On the navigation bridge, it is recommended that equipment should be grouped into navigation, maneuvering, communication, and monitoring sections. Functions, height, width, and depth of consoles, and location of indicators, controls, and equipment should be in accordance with ergonometric principles, optimize usage, and prevent operator fatigue using the recommended practices of ASTM F 1166-95. All consoles and individual equipment items should be positioned to optimize human factors for a person looking forward, and each workstation or console should present all of the information necessary to carry out the particular functions required. Consoles should be designed so that information is presented on the vertical part of the console and controls are on the horizontal part.

The communications equipment should be located as high in the vessel as practicable.

27.4 Power supplies

In general, these systems are required by regulatory authorities to have duplicate or backup power sources. Where required, the following power arrangements should be made:

a) The radio system power supply should be able to simultaneously energize the equipment at full load and charge any batteries forming a part of the system, while maintaining the voltage within 10% of its rated value.
b) The radio system backup power supply should be separate and independent of any other electrical system and of the propelling power of the ship and should have the capability to simultaneously operate the radio equipment at full load for at least 8 h and operate automatic alarm signal devices for at least 1 h.
c) The radio system backup power supply should be located as near to the GMDSS console or components as practicable. Where a reserve supply unit is provided, it should be located adjacent to the equipment.
d) Independent radar systems and integrated navigation systems should be supplied from separate emergency feeders or branch circuits.

--`,,`-`-`,,`,,`,`,,`---
Copyright © 2002 IEEE. All rights reserved.
Copyright The Institute of Electrical and Electronics Engineers, Inc.
Provided by IHS under license with IEEE
No reproduction or networking permitted without license from IHS
Not for Resale

27.5 Radio interference

In general, steps should be taken during design and installation to minimize conducted and radiated electromagnetic interference between (to and from) all electrical equipment. This interference takes two basic forms: conducted and radiated. The following techniques can be used for reducing EMI:

a) Locate transmitting and receiving antennas as far apart as practicable
b) Use two-conductor, twisted-pair wiring
c) Separate power cabling and cabling carrying high-level signals from low level-signals (where such cables must cross, they should cross at right angles)
d) Use shielded cables on circuits that may be susceptible to EMI
e) Minimize the length of ground leads
f) Electrically bond or isolate all stays, shrouds, and wire rigging (where stays are isolated, insulators should be of a type that will not part the stay upon failure)
g) Use suitable protection against power line transients in the equipment
h) Ground the armor on armored coaxial cable

27.6 Antennas

Antennas should be mounted as high as practicable with the maximum physical spacing. Radar antennas and satellite system antennas should be positioned to minimize shadowing. Antennas should be physically separated to reduce electrical interaction and to prevent [avoid] physical contact due to antenna deflection caused by ice loading, wind, or sea conditions. Antennas should be mounted so that their failure will not foul other antennas. Antennas, insulators, or radomes should not be painted or coated. The following guidelines are also recommended:

a) Wire antennas should be continuous from end-to-end and should be installed free of kinks, sharp bends, deformations, and broken strands. Shackles, insulators, and similar antenna hardware should be sized so that the antenna wire will fail before the hardware.
b) Antennas should be positioned in accordance with manufacturers recommendations.
c) Consideration should be given to reinforcing the mounting area or using a doubler plate to support the added weight and bending moment of any antenna.
d) Lightning protection should be provided.

27.7 Equipment installation guidelines

In addition to the foregoing general recommendations, the following equipment-specific recommendations apply:

a) Radar installations
    1) Provision should be made in the navigating bridge for radar plotting if this feature is not built in to the equipment.
    2) Radar equipment should be arranged to prevent interference with other equipment and systems.
    3) The antenna(s) should be located to avoid shadow sectors. If this is not possible, the arrangement of the antennas should be such as to minimize the impact on the safe navigation of the vessel. Blocked sectors should be clearly identified and approved by the authority having jurisdiction.
    4) The antenna foundation platform and rigging should be constructed to provide safe maintenance access.
    5) Displays should be designed so that light from the display does not interfere with night vision and that light from navigating bridge windows does not interfere with viewing radar screens.

Copyright © 2002 IEEE. All rights reserved.

Copyright The Institute of Electrical and Electronics Engineers, Inc.
Provided by IHS under license with IEEE
No reproduction or networking permitted without license from IHS
Not for Resale

6) At least one display in the bridge should match compass alignment and should be located as to be viewable while facing forward, by at least two persons

b) Radio direction finder installation (if installed)
   1) The antenna should be mounted as high as possible on the (centerline of the) vessel to minimize interference from other equipment and systems. (So reception of bearing signals are not degraded by the proximity of other antennas, cranes, wire halyards, or large metal objects.)
   2) Fixed metallic structures rising above the base of the antenna should be no closer than 1.8 m.[26]

c) Echo sounders and speed logs
   1) An important consideration is placement of the transducer(s). Transducer locations should be selected to minimize interference and noise created by turbulence, aeration, cavitation, engine and propeller noise, and other transducers.
   2) There should be dry access to the transducer. Where necessary, the interior of the bottom should be built up to allow the transducer to be level. Care should be taken to ensure that the transducer is not covered with grease or antifouling paint
   3) Where the operating frequencies are similar, care should be taken to physically separate transducers so as to avoid interference.

d) Satellite communications equipment
   1) Objects should not be located within 10 m of the antenna nor within −5° of the antenna horizontal plane.
   2) Objects that can subtend an arc of greater than 6° of the antenna beam should be avoided.
   3) The antenna should not be placed near sources of flammable or combustible vapors, exhaust gas, dust, dirt, or heat.
   4) The antenna foundation platform should facilitate and provide for safe maintenance access to the interior of the radome.

e) Waveguide and coaxial cable installation
   1) The runs should be kept as short as possible, and the number of bends, offsets, connections, and adapters should be minimized.
   2) Routing should be selected to avoid strain on the material and to minimize temperature changes. Waveguide should be routed to minimize the collection of condensation, and should include drainage provisions.
   3) Waveguide should not be distorted and should be adequately supported along the entire length. Waveguide should not be secured to surfaces that can move with respect to each other.
   4) Bends and twists should not exceed manufacturers' recommendations.

28. Fire detection, alarm, and sprinkler systems

Fire detection, alarm, and sprinkler systems are required by regulatory agencies for various vessels types and applications, including periodically unattended machinery spaces. Specific system and equipment requirements can be found in NFPA Standards SOLAS, classification society rules, and regulatory agency regulations. System/equipment type approval is often required. The latest edition of these documents should be consulted prior to system design.

Automatic fire detection systems are recommended for all vessels, with detection in all accommodation and machinery spaces, including passageways, stairwells, work spaces, store rooms, and pumprooms. Cargo holds and vehicle ro/ro spaces should be fitted with smoke/fire detection in accordance with current regulations.

[26](6 ft)

Copyright © 2002 IEEE. All rights reserved.
Copyright The Institute of Electrical and Electronics Engineers, Inc.
Provided by IHS under license with IEEE
No reproduction or networking permitted without license from IHS
Not for Resale

28.1 General

Each component of an installed shipboard fire detection and fire alarm system should be constructed for the marine environment, including electromagnetic interference (see 1.5.1 and 9.20). The system, and its components, should have been tested by an independent laboratory to nationally or internationally recognized testing protocols. See NFPA 72-1999 for more information about fire detection and alarm systems.

All detectors should be capable of being operationally tested and restored to normal operation without replacing parts. Detectors installed in damp or wet locations, such as ro/ro spaces or machinery spaces, should be specifically designed and tested for such use.

Every fire detection and fire alarm system should be provided with two sources of power, one of which should be from an emergency source that switches automatically to provide power upon failure of the main power source. The emergency source can be a storage battery.

Detecting systems should be designed so that the indication of a fire on any circuit will not interfere with the operation of an alarm on any other circuit. The system should be designated so that failure of a detection circuit will not interfere with the operation of any other detection circuit.

System cables should be so arranged to avoid galleys, machinery spaces, and other enclosed spaces having a high fire risk, except to connect fire detection equipment in those spaces.

Fire alarm systems should not be used for the transmission of other than fire alarm signals.

28.2 Manual fire alarm systems

Manual fire alarm systems should be provided on all ships, and at least one alarm box should be provided in each zone or at the exit to each space. The systems should be installed in all areas, other than main machinery spaces, that are normally accessible to the passengers and crew. All boxes should be finished in bright red with operating instructions finished in a contrasting color.

The system should be arranged to indicate, both visibly and audibly, on the navigating bridge or at the fire control station, when a manually operated call point has been actuated. The visible notice should indicate the zone in which the alarm originates. The fire alarm should sound in the quarters of the firefighting crew, unless a separate alarm system is provided for this purpose, e.g., general alarm systems.

In vessels fitted with an automatic fire detecting and alarm system in accommodation spaces, the manual system may be a part of the automatic system.

28.3 Automatic fire alarm systems

An automatic fire alarm system consists of a fire detection and alarm central control panel, repeater panels (if provided), detectors, and manually operated call points located throughout the vessel in the various structural fire zones, and audible and visual alarms to signal the presence or indication of fire.

Every fire detection and fire alarm central control panel should provide at least visual indication of fire, fire location, fault, and panel operational status. Each central panel should audibly alarm upon fire or fault. Each central panel should indicate faults resulting from open circuit, alarm tone generator failure, system/circuit ground, battery failure, open fuse, loss of ac power, and fire zone circuit interruption.

The central control panel should be located on the navigating bridge or at a continuously monitored fire control station. A repeater panel should be provided in all other locations where direction to the fire-fighting

Copyright © 2002 IEEE. All rights reserved.

Copyright The Institute of Electrical and Electronics Engineers, Inc.
Provided by IHS under license with IEEE
No reproduction or networking permitted without license from IHS
Not for Resale

team or crew and passengers may be given. The system should sound alarms and provide visual indication of alarm.

The activation of any detector or manually operated call point should initiate a visual and audible fire signal at the control panel and indicating units. If the signals have not received attention within 2 min, the general alarm should be automatically sounded throughout the crew accommodation and service spaces, control stations, and main machinery spaces.

Indicating units should, as a minimum, denote the zone in which a detector or manually operated call point has operated.

Where the detection system does not include means of remotely identifying each detector individually, no detector section should cover more than one deck within accommodation, service, and control spaces (exclusive of enclosed stairways), and on passenger ships, it should not serve spaces on both sides of the ship. In order to avoid delay in identifying the source of fire, the number, and arrangement of detectors within a section may be further limited by regulatory agencies. Where the detection system identifies each detector individually, the sections may cover spaces on both sides of the ship and on several decks, but it should not cover spaces in more than one main vertical fire zone.

Fire detection systems with the capability of identifying each detector individually should be designed so that

a) Means are provided to ensure that any fault (power interruption, short-circuit, ground) occurring in a loop will not make the entire loop ineffective
b) All arrangements are made to enable the initial configuration of the system to be restored in the event of failure (electrical, electronic, programming)
c) The first initiated fire alarm will not prevent any other detector from initiating further fire alarms

28.4 Fire detection and fire alarm system for periodically unattended machinery spaces

A fire detection and alarm system should be provided for periodically unattended propulsion machinery spaces. A fire detection and alarm control panel should be provided in the machinery control room. Means to manually activate the fire alarms in the engineers' accommodation and propulsion machinery spaces and on the navigating bridge should be provided. Automatic activation of fire detectors and manual activation of call points should be initially alarmed at the machinery control room panel, when operating in an attended mode. When operating in an unattended mode, alarms should meet 9.10, except that selective switching should not be provided.

28.5 Smoke extraction systems

Smoke sampling systems for fire detection consist of individual pipes installed from collectors located in the compartments to be protected to an indicating cabinet located on the navigating bridge or in the fire control station. A circulation of air is maintained through the pipes by means of a suction fan located adjacent to the indicating cabinet. In case of fire in a compartment, the smoke is drawn through the pipe to the indicator cabinet. This type of system should be fitted with an audible alarm that will call attention to the receipt of smoke in the indicator cabinet and indicate the location of the alarm. Sequential sampling may be used. Suction fans should be provided in duplicate and arranged so that the idle unit is ready for immediate operation in case of failure of the operating unit. Two sources of power should be provided, one of which should be from an emergency source that switches automatically to provide power upon failure of the main power source. The emergency source can be a storage battery. All electric circuits should be supervised to automatically provide a trouble alarm in case of failure of suction fan motor failure or power supply failure.

Copyright © 2002 IEEE. All rights reserved.
Copyright The Institute of Electrical and Electronics Engineers, Inc.
Provided by IHS under license with IEEE
No reproduction or networking permitted without license from IHS
Not for Resale

28.6 Detector types

Optical smoke detectors use light scattering to detect the presence of airborne particulates. Optical smoke detectors should be designed to prevent airborne contaminates from disabling the detector or causing a false alarm.

Ionization smoke detectors register the presence of the products of combustion by detecting a decrease in electron transfer between polarized elements. Ionization smoke detectors should be designed to prevent airborne contaminates from disabling the detector or causing a false alarm.

Heat detectors utilize an electronic sensing element of low thermal mass to provide response to temperature rise. Heat detectors should operate on a fixed temperature basis.

Flame detectors detect the presence of fire by sensing the ultraviolet (UV) rays emitted by flames. Flame detectors should be principally used in areas considered to be of high risk where naked flames are likely, such as a flammable liquid storage area. Flame detectors should be used in conjunction with optical smoke, ionization smoke, or heat detectors.

Smoke detectors in accommodation spaces, stairwells, escape routes, and similar locations should be certified to operate before a smoke density exceeds 12.5% obscuration per meter, but not until the smoke density exceeds 2% obscuration per meter. In other locations, sensitivity limits should take into consideration the avoidance of false alarms.

Generally, heat detectors should be certified to operate before the temperature exceeds 78 °C but not until the temperature exceeds 54 °C, when the temperature is raised to those limits at a rate less than 1 °C per min. At higher rates of temperature rise, the detector should operate within temperature limits determined by the regulatory agency.

When installed in hazardous locations, detectors should be of the intrinsically safe type. (Reference UL 913-1988.)

When installed in accommodation spaces, or other areas with public access, detectors should be designed to prevent tampering or unauthorized removal. Each detector unit should be fitted with a visual indicator to show that it is in an operational mode. Additionally, each detector unit should be fitted with a visual indicator that latches when in the alarm mode. The operational status and alarm mode visual indicators may utilize the same visual component.

Each detector unit located in a passenger cabin should be provided with an integral audible alarm.

28.7 Automatic sprinkler, fire detection, and fire alarm systems

An automatic sprinkler, fire detection, and fire alarm system is a water-flow fire extinguishing system comprising distribution piping, an automatic water supply, automatic water discharge devices, and central and remote alarm indicating units. The system diffuses water over a predetermined area. The sprinklers operate automatically, and the actuation produces audible and visual signals. No action by the crew is needed for system operation. See NFPA 13 for more details of automatic sprinkler systems.

Each section of sprinklers should include means for giving a visual and audible alarm signal automatically at one or more indicating units whenever any sprinkler comes into operation. Such units should give an indication of any fire and its location in any space served by the system and should be centralized on the navigating bridge or in the main fire control station. In addition, a remote alarm should be installed so that any alarm from the system is immediately received in a continuously monitored location. Such an alarm system should include provision for monitoring and alarming system faults.

Copyright © 2002 IEEE. All rights reserved.

Copyright The Institute of Electrical and Electronics Engineers, Inc.
Provided by IHS under license with IEEE
No reproduction or networking permitted without license from IHS
Not for Resale

An independently operated seawater pump should be provided solely for the purpose of continuing automatically the discharge of water from the sprinklers. This pump should be started automatically by a pressure drop in the piping system and supply the sprinkler system before the freshwater sprinkler tank is completely empty.

There should be not less than two sources of power supply for the seawater pump and automatic alarm and detection system. Where the sources of power for the pump are electrical, there should be two dedicated feeders, one from a main switchboard and the other from the emergency switchboard.

The feeders should be arranged to avoid galleys, machinery spaces, and other enclosed spaces of high fire risk, except insofar as it is necessary to reach the appropriate switchboards, and should be connected to an automatic transfer switch located at the sprinkler pump motor controller. The normal source should be the feeder from the main switchboard. The feeder circuit breakers should be clearly labeled and normally kept closed. No other switch should be installed in the feeders. Loss of power on either feeder should be alarmed. One of the two sources of power for the alarm and detection system should be an emergency source.

29. Watertight and fire door equipment

29.1 General

The control system for watertight door equipment should include a central control panel, motor operating units, motor control panels, local control stations, and visible and audible alarm system, as necessary for complete system control. Fire door controls include central control panel hold-back magnets and local control switches.

Enclosures for electric components at the watertight door position or below the bulkhead deck should be waterproof. At other locations, dripproof enclosures may be used.

29.2 Watertight door systems

29.2.1 Watertight door central control panel

The panel should be constructed of corrosion-resistant material and have a visible permanent diagram showing the location of each watertight door by deck. It should provide a two-position master switch that will close all watertight doors simultaneously (doors may be opened locally, but will automatically reclose). The other position provides for full local door control. Indicator lights showing the open (red) and closed (green) door positions should be provided. Both lights should be on when the door is in an intermediate position. The green light should only be on when the door is in the fully closed position. The source of the door indication should be independent from that of the door control open/close circuit. Where a very large number of watertight doors are to be operated, the central control system may provide for operation of doors sequentially, with preference to closing doors on the lowest decks of the vessel first.

29.2.2 Motor unit

Each watertight door should have a motor operating unit of ample capacity, with self-contained gearing and limit switches, arranged to start without load and automatically clutch to the door mechanism. The motor-operating door unit should be designed to automatically disconnect all hand gear when electrically operated. Hand gear should always be engaged when not electrically operated. The method of control should ensure protection of the motor in the event of a jammed door.

--`,,`-`-`,,`,,`,`,,`---

Copyright © 2002 IEEE. All rights reserved.
Copyright The Institute of Electrical and Electronics Engineers, Inc.
Provided by IHS under license with IEEE
No reproduction or networking permitted without license from IHS
Not for Resale

29.2.3 Motor control panel

Each motor-driven unit should have a suitable control panel, line disconnect switch, reversing contactors, relays, and resistors.

29.2.4 Local control station

A switch to open the door located on each side of the bulkhead, through which the door penetrates, is required and shall be easily accessible and conspicuous to anyone passing through the door opening. When the corresponding control switch on the navigating bridge central control panel is in the closed position, the door may be opened by the local control station, but it should reclose automatically when the local control handle is released.

29.2.5 Electrohydraulic doors

The power supply for each hydraulically operated watertight door system that uses a hydraulic system common to more than one watertight door should be an accumulator tank with enough capacity to close all doors twice and open all doors once. The accumulator tank should be supplied by one or more motor-driven hydraulic pumps that can operate from the emergency power system. Motor-driven hydraulic pumps should automatically maintain the accumulator tank pressure within the design limits. Pumps should be located on and controlled from, the uppermost continuous deck. Accumulator tank capacity should be available when the accumulator tank pressure is at the automatic pump "cut-in" pressure.

Electrical power for each hydraulically operated watertight door that has an independent hydraulic system for the door operator should be from the emergency power system.

29.2.6 Alarm and indicating equipment

An audible signal should be installed adjacent to each power-operated watertight door that operates prior to the movement of the door in either direction and continues until the door has reached its limit of travel. A visible signal should be provided at each remote manual operating station to show the open and closed positions of the door.

NOTES

1—SOLAS Chapter II-1 Reg. 15.7.1 only requires the audible signal to sound prior to the door closing and remain on until the door is finally closed.

2—SOLAS Chapter 11-1 Reg. 15.7.8 states that an audible and visual alarm be provided for the loss of power to the watertight doors.

29.2.7 Electric power supply

The watertight door system should be connected to the emergency switchboard. Each distribution panel-board for a watertight door system should be above the uppermost continuous deck and should have means for locking. Each individual watertight door operating system should have a separate branch circuit.

29.2.8 Fault protection

The watertight door system should be protected against overcurrent such that failure in one door circuit will not be the cause of failure in any other door circuit. A short-circuit or other fault in the alarm and indicator circuit should not result in loss of power for door operation. The overcurrent devices should be arranged to isolate a fault with as little disruption of the system as possible. The instantaneous setting of each feeder overcurrent device should be equal to or greater than the 200% of its maximum load. The setting of a branch circuit overcurrent device should be equal or less than 25% of that of the feeder overcurrent device.

Copyright © 2002 IEEE. All rights reserved.

Copyright The Institute of Electrical and Electronics Engineers, Inc.
Provided by IHS under license with IEEE
No reproduction or networking permitted without license from IHS
Not for Resale

The system connections should be such that leakage of water into the local controller will not establish a circuit that will cause the door to open.

29.3 Fire door holding and release systems

29.3.1 Equipment

Certain self-closing fire doors are required by regulatory agencies to be released from a central control station by opening an electric circuit. Arrangements should be provided for fire doors to be held in the open position by means of energized electromagnets controlled from a central control point. Doors should also be capable of being released locally. Door release systems should be arranged to be “failsafe”; i.e., they should cause the door to close in the event of their failure.

Each fire door should have a holding magnet and a self-aligning armature plate on the door to be held by the magnet when the fire door is fully open and a local control station. Each holding magnet should be operable from a central control station. Each fire door holding circuit should be arranged so that loss of potential power releases the doors, except that a momentary interruption of the circuit that results from the operation of an automatic bus transfer device in connection with the emergency lighting and power system should not release the doors.

29.3.2 Central control station

The central control station should consist of an enclosed switch, circuit breaker, or magnetic contactor rated for the connected load. The switching unit should be an externally operable, maintaining type. On a large vessel where the simultaneous closing of all fire doors could interfere with firefighting operations or with the evacuation of passengers, the fire door release system should be subdivided into two or more circuits. The circuits should be arranged so that it is possible to isolate any compartment in which a fire is reported by enough closed fire doors to stop drafts to the fire area. As a minimum, the following doors would be closed:

a) Each fire door in the area between the main vertical zone bulkheads immediately forward and aft of the fire area
b) Each fire door in the main vertical zone bulkheads immediately forward and aft of the area
c) Each fire door in the adjacent main vertical zones forward and aft of the fire area

An indication system that shows the “door open” and “door closed” condition should be provided. The device giving the “door closed” indication should only operate when the door is in the fully closed position.

The source of power for the fire door holding, release, and indicating system should be the emergency power source.

29.3.3 Local control station

The local control station should be an enclosed, externally operable, fused switch or circuit breaker and should be of the maintained contact type. A single fire door holding magnet should be connected to the load end of this local control station, except that if several doors are near each other, a single local control station switch of ample rating may be used to release the doors simultaneously. A switch to open the door located on each side of the bulkhead through which the door penetrates is required and should be easily accessible and conspicuous to anyone passing through the door opening. Remote power operated or sliding fire doors shall be provided with audible and visual devices that will operate at least 5 s but not more than 10 s before the door begins to close, and shall continue until the door is fully closed.

--`,,`-`-`,,`,,`,`,,`---
Copyright © 2002 IEEE. All rights reserved.
Copyright The Institute of Electrical and Electronics Engineers, Inc.
Provided by IHS under license with IEEE
No reproduction or networking permitted without license from IHS
Not for Resale

29.3.4 Fire door holding magnet

Each fire door holding magnet should be designed to hold with a minimum force of 900 N, and it should be capable of exerting a pull that equates to at least half the weight of the door, plus the force required to overcome any self-closing mechanism so that the door can be held open under a rolling condition of up to at least 15½° either way. Other retaining devices, e.g., solenoid controlled latches, should be capable of exerting a restraint equivalent in this subclause. When deenergized, the residual magnetism shall not impede the door from closing at inclinations of 3½° in any axis. If the arrangement of the electrical supply involves transfer relays to transfer the supply from a normal to a temporary source, a fire door holding magnet must be designed so that with a pull on the armature of 500 N, the armature is held in the sealed position for at least ¼ s after the circuit to the magnet is opened. The fire door holding magnet should be designed for continuous duty in an ambient temperature of 40 °C with a temperature rise by thermometer measurement of not more than 55 °C for Class A insulation, and not more than 80 °C for Class B insulation. The electromagnetic coil should be vacuum-pressure impregnated, and the magnet enclosure should be either dripproof or watertight.

30. Gyro compass systems

30.1 General

A gyrocompass system generally includes the following items:

a) A master compass, which provides the ship's true heading at all times and transmits this indication to repeating instruments and other equipment and systems, such as radar, anti-collision system, navigation computers, course recorders, autopilots, and so on
b) Repeaters of various types
c) Power conversion units, if required, to convert ship's power to power required by the gyrocompass system
d) A control panel or panels for controlling power and signals supplied to and from the gyrocompass system
e) Alarm circuits to indicate failure of power supply and malfunction of gyrocompass system (alarm circuits should be powered from a source independent of the compass power supply)
f) If specified, an integral source of backup electric power, including a chargeable battery supply, that assumes the system load upon failure of the normal source of power.
g) Position and speed data from Global Positioning System (GPS) units may be used as an input

30.2 Installation and location

The master compass, power conversion unit, control panels, and batteries are ideally located together in a centerline compartment, near the metacenter, and as close to the navigating bridge as possible.

The master compass should be mounted with its fore and aft datum lines parallel to the ship's fore and aft datum line within 0.5°. The lubber line should be in the same vertical plane as the center of the compass card and should be aligned accurately in fore and aft directions. This alignment requirement also applies to bearing repeaters. The master compass should be mounted on a rigid, level foundation.

All equipment should be arranged to provide easy access for servicing, and to minimize damage from heat, dust, oil vapors, steam, or dripping liquids. Items exposed to the weather, seas, splashing, or other severe moisture conditions should be watertight or protected by watertight enclosures. If the method of installation does not ensure positive equipment grounding, then separate grounding conductors should be provided. Control equipment should be in metal enclosures.

Copyright © 2002 IEEE. All rights reserved.

Copyright The Institute of Electrical and Electronics Engineers, Inc.
Provided by IHS under license with IEEE
No reproduction or networking permitted without license from IHS
Not for Resale

When installed in the pilothouse or similar spaces, steering and bearing repeaters should be provided with illumination that can be dimmed or intensified.

30.3 Power supply

Power should be normally supplied from a separate feeder from the emergency power distribution switchboard. If specified, a battery charger and battery dedicated to the operation of the gyrocompass should be provided adjacent to the unit for backup electric power. Automatic transfer to the backup source should be provided. An alarm should be installed on the navigating bridge to indicate loss of normal power and transfer to backup power. If a vessel does not have an emergency power system, normal power to the gyrocompass system should be from a dedicated feeder from the ship service switchboard.

31. Electric propulsion and maneuvering system

31.1 Scope

The application of power electronics technology to large motor drive systems has resulted in the successful installation of shipboard electric propulsion systems that derive input power from a central, fixed-frequency power generation plant that also provides power to the ship service loads. These integrated electric power systems require careful consideration of the physical location requirements of system equipment, cable protection, and control devices as well as special attention to power distribution and load management to ensure an uninterrupted supply of power to vital systems.

There are currently a variety of electric propulsion concepts, such as, but not limited to, fixed speed controllable pitch propeller and variable speed propeller with fixed or controllable pitch. Variable speed propellers are usually supplied from static power converters, such as dc/dc drives, dc drives with thyristor converters, ac drives with pulse width modulated (PWM) converters, load commutated inverters (LCI), and cycloconverters. Each type may give different considerations to network and mechanical design of the system.

This clause provides recommendations covering general specifications, testing, installation, operation, and maintenance of electric propulsion systems. Although these recommendations relate specifically to the electric propulsion equipment, they also address mechanical equipment where required for the successful functioning of the entire system.

31.2 Regulations

Classification societies and regulatory agencies generally provide detailed rules and regulations for structural foundations, strength of materials, installation, inspection, tests, plans, and data. These regulations should be consulted in the design and installation of electric propulsion systems and equipment.

31.3 System requirements

31.3.1 General

The design of an integrated electric power system should consider the power required to support ship service loads and propulsion loads under a variety of operating conditions, with optimum usage of the installed and running generator sets.

Copyright © 2002 IEEE. All rights reserved.
Copyright The Institute of Electrical and Electronics Engineers, Inc.
Provided by IHS under license with IEEE
No reproduction or networking permitted without license from IHS
Not for Resale

In order to prevent excessive torsional stresses and vibrations, careful consideration should be given to coordination of the mass constants, elasticity constants, and electrical characteristics of the system. The entire system includes prime movers, generators, converters, exciters, motors, foundations, slip-couplings, gearing, shafting, and propellers.

The normal torque available from the propulsion motors for maneuvering should be adequate to permit the vessel to be stopped or reversed, when the vessel is traveling at its maximum service speed, in a time that is based on the estimated torque-speed characteristics of the propeller during maneuvering and on other necessary ship design characteristics, as determined from hull model testing. Adequate torque margin should also be provided in ac propulsion systems to guard against the motor pulling out of synchronism during rough weather and on a multiple screw vessel, when turning. This margin should be based on information related to propeller and ship characteristics, as well as the propulsion drive's characteristics.

The electric propulsion system may be utilized by a dynamic positioning system. The applicable class and regulatory requirements for dynamic positioning regarding power system and thrust devices should then apply for the propulsion system in addition to the requirements in this clause.

Systems having two or more propulsion generators, two or more propulsion drives, or two or more motors on one propeller shaft should be so arranged that any unit may be taken out of service and disconnected electrically, without affecting the other unit.

31.3.2 Power quality and harmonic distortion

The power quality recommendations for ship service systems, as specified in Clause 4, for voltage and frequency, should be used also in integrated electrical propulsion plants, with following exceptions:

- A dedicated propulsion bus should normally have a voltage total harmonic distortion of no more than 8%. If this limit is exceeded in the dedicated propulsion bus, it should be verified by documentation or testing that malfunction or overheating of components does not occur.
- A nondedicated main generation/distribution bus should not exceed a voltage total harmonic distortion of 5%, and no single voltage harmonic should exceed 3%.
- A harmonic distortion calculation and measurements should normally be carried out, in accordance with a method equivalent to IEEE Std 519-1992. Normally, it will be desired to perform an initial calculation as input to the final design of electrical equipment, such as generators and transformers, and a final calculation after the equipment is designed using the final design parameters. Measurement of harmonic distortion, if desired to verify analytic results, should be done in a variety of typical operating conditions and voltage levels to establish a baseline for the system.

In order to achieve the THD limits, consideration should be given to using equipment such as transformers, passive or active filters, or rotating converters.

When passive harmonic filters or capacitors are used for nonlinear current compensation, attention should be paid to any adverse effect of fluctuations on the RMS and peak values of system voltage. Failure of fuses in harmonic filter circuits should be detected.

31.3.3 Redundancy

Redundancy should be provided within the propulsion system in accordance with requirements of the authority having jurisdiction to ensure safe operation of the vessel.

31.3.4 Safety

For systems in which excessive overspeeding of the propulsion motors may occur, such as under light load conditions or upon loss of a propeller, suitable overspeed protection should be provided. Provision should be

Copyright © 2002 IEEE. All rights reserved.

Copyright The Institute of Electrical and Electronics Engineers, Inc.
Provided by IHS under license with IEEE
No reproduction or networking permitted without license from IHS Not for Resale

made for protection against severe overloads, excess currents, and electrical faults that could result in damage to the plant. The protective equipment should be capable of being set so that it will not operate on overloads or excess currents likely to be experienced in a heavy seaway or when maneuvering.

The main propulsion circuit should be provided with ground leakage indicating devices that will operate when the insulation resistance is 100,000 Ω or less. Excitation circuits of propulsion motors should be provided with lamps, meters, or other suitable means to indicate continuously the state of the insulation of the excitation circuits under running conditions.

31.4 Prime movers for integrated power and propulsion plants

Prime movers, such as diesel engines, gas turbines, or steam turbines, for the generators in integrated electric power systems shall be capable of starting under dead ship conditions in accordance with requirements of the authority having jurisdiction. Where the speed control of the propeller requires speed variation of the prime mover, the governor should be provided with means for local manual control as well as for remote control.

The prime mover rated power, in conjunction with its overload and the large block load acceptance capabilities, should be adequate to supply the power needed during transitional changes in operating conditions of the electrical equipment due to maneuvering, sea, and weather conditions. Special attention should be paid to the correct application of diesel engines equipped with exhaust gas-driven turbochargers to ensure that sudden load application does not result in a momentary speed reduction in excess of limits specified in Table 4.

When maneuvering from full propeller speed ahead to full propeller speed astern with the ship making full way ahead, the prime mover should be capable of absorbing a proportion of the regenerated power without tripping from overspeed when the propulsion converter is of a regenerative type. Determination of the regenerated power capability of the prime mover should be coordinated with the propulsion drive system. The setting of the overspeed trip device should automatically shut down the unit when the speed exceeds the designed maximum service speed by more than 15%. The amount of the regenerated power to be absorbed should be agreed to by the electrical and mechanical machinery manufacturers to prevent overspeeding.

Electronic governors controlling the speed of a propulsion unit should have a backup mechanical fly-ball governor actuator. The mechanical governor should automatically assume control of the engine in the event of electronic governor failure. Alternatively, consideration would be given to a system, in which the electronic governors would have two power supplies, one of which should be a battery. Upon failure of the normal supply, the governor should be automatically transferred to the alternative battery power supply. An audible and visual alarm should be provided in the main machinery control area to indicate that the governor has transferred to the battery supply. The alternative battery supply should be arranged for trickle charge to ensure that the battery is always in a fully charged state. An audible and visual alarm should be provided to indicate the loss of power to the trickle charging circuit. Each governor should be protected separately so that a failure in one governor will not cause failure in other governors. The normal electronic governor power supply should be derived from the generator output power or the excitation permanent magnet alternator. The prime mover should also have a separate overspeed device to prevent runaway upon governor failure.

31.5 Generators for integrated power and propulsion plants

31.5.1 General

Generator construction should be in accordance with 7.4.

Copyright © 2002 IEEE. All rights reserved.
Copyright The Institute of Electrical and Electronics Engineers, Inc.
Provided by IHS under license with IEEE
No reproduction or networking permitted without license from IHS
Not for Resale

The power rating of generators in an integrated electric plant is not limited to the recommendations in 7.4. The generator should be rated for the total distortion of currents in the electrical system.

If the insulation is not comprising self-extinguishing material, provisions for a fire extinguishing system suitable for fires in electrical equipment should be provided for the generator, which is enclosed or in which the air gap is not directly exposed.

The generators should be constructed so that they withstand, without mechanical damage, an overspeed of 25%. The generators should be able to operate in parallel and share load proportionately.

Means should be provided to prevent circulating currents passing between the journal and the bearings.

The generators of an integrated propulsion and power system can be considered as emergency generators, provided that class rules and regulation and legislation requirements for emergency generators are fulfilled.

Propulsion generators should be provided with means for obtaining the temperatures of the stationary windings, as shown in Table 32. The temperatures are to be displayed at a convenient location such as the main control console. A remote audible alarm actuated when thermal limits are exceeded should be provided. For machines with a heat exchanger type closed-circuit cooling method, either the flow of primary and secondary coolants or the winding temperatures should be monitored and alarmed. Liquid coolant leakage detection should be provided and alarmed if applicable. Such detectors should be provided for all sizes of propulsion generators and not limited to machines of certain sizes and rating.

Table 32—Temperature measurement points—propulsion generator

Sensor	Location	Function	Comment
Stator winding temperature of ac generators	In each phase	Warning + trip	In hot spot[a]
Field winding temperature of dc generators	Field winding	Warning + trip	In hot spot[a]
Cooling air temperature	Cold air	Warning	If water cooled[b]
Water leakage indicator	Heat exchanger	Warning	If water cooled[c]

[a]Minimum one + one spare. 3-wire PT100 or equivalent.
Warning + trip limit to be advised by vendor.
[b]Minimum one + one spare per cooling circuit. 3-wire PT100 or equivalent.
Warning limit to be advised by vendor.
[c]Passive level switch

31.5.2 Voltage control and generator excitation

A standby unit should be provided for each type of automatic voltage regulator (AVR). For propulsion generators, manual voltage regulators should not be used.

Electric propulsion generators should be arranged so that propulsion can be maintained in case of failure of a generator excitation system or failure of a power supply for an excitation system.

If a propulsion system contains only one generator and one motor and cannot be connected to another propulsion system, more than one exciter with controller should be provided for both motor and generator as applicable. However, for self-excited generators, a duplicated automatic voltage regulator is sufficient.

Copyright © 2002 IEEE. All rights reserved.

Copyright The Institute of Electrical and Electronics Engineers, Inc.
Provided by IHS under license with IEEE
No reproduction or networking permitted without license from IHS
Not for Resale

There should be no automatic circuit-opening devices in excitation circuits except those affording short-circuit or phase-failure protection for the main propulsion circuit. For the protection of the field windings and cables, means should be provided for limiting the voltage induced when the field circuits are opened.

When static excitation units are used, the arrangement of semiconductor fuses applied to protect diodes or thyristors necessary to protect the field coils against transient overvoltages should be such as to limit the protection to individual devices or groups of devices, without opening the entire excitation circuit. Where fuses are used for excitation circuit protection, they should not interrupt the field discharge resistor circuit upon rupturing. Static excitation power supplies should comply with the requirements of IEEE Std 444-1973 to the maximum extent practicable.

31.5.3 AC generators

The generators should be sized to provide adequate load margin to guard against large motors pulling out of step during rough weather and while maneuvering.

Power factor should be calculated for each particular application, and it should allow for the combined demands of the ship service load and the propulsion drive static power converters when operating at low ship speeds (high commutation angle). The generator should be rated for the THD of the whole electrical system.

31.5.4 DC generators

DC generator armature voltage should not exceed 1000 V dc.

31.6 Propulsion drive transformers

Static converter propulsion transformers should be designed and rated for starting and operation in a adjustable speed drive without any degradation of the insulation, degradation of commutation, and derating. All windings should utilize Class F or H insulation systems that resist moisture, oil vapor, and salt air. In lieu of detailed calculation of additional losses, e.g., due to harmonic currents, the windings should utilize a 55 °C temperature rise over the ambient temperature for liquid-filled transformers.

This clause is applicable as additional requirements to Clause 12, to transformers who's main purpose is to feed main and excitation power to propulsion converters or auto transformers intended for continuous operation in relation to propulsion converters, e.g., for regenerative breaking. For auxiliary supply transformers, starting transformers, and so on, Clause 12 should apply.

Propulsion transformers should be evaluated where there is a need for, either or in combination,

- Adjusting voltage level from distribution system to propulsion converter voltage
- Reducing harmonic distortion (e.g.,12-pulse configuration)
- Reducing conductive born noise (EMI), using transformer with conductive shielding between primary and secondary
- Separate motor drive circuit's from distribution system's grounding philosophy

Where these criteria are fulfilled without the use of transformer, the propulsion transformer will normally be omitted.

Rating determination of the propulsion transformer should include

- Continuous operation at 105% of maximum continuous load of actual converter
- Overload duty cycle as specified for propulsion converter, if any

Copyright © 2002 IEEE. All rights reserved.
Copyright The Institute of Electrical and Electronics Engineers, Inc.
Provided by IHS under license with IEEE
No reproduction or networking permitted without license from IHS
Not for Resale

— Harmonic losses
— Transformer rating should be according to IEC 60726, or applicable IEEE Std C57™ series standards

Enclosure should be protected against corrosion. Propulsion transformers with enclosure should be equipped with heaters, suitable to keep it dry when not connected. The heaters should be automatically connected when main supply is disconnected. A light indicator should indicate when heater power is connected.

When using air to water heat exchanger, double-tube water pipes should be used, of a material corrosion resistant to the cooling medium. Special attention should also be made to the minimum distances in any direction to ensure proper cooling and inspection/maintenance work.

Each part of the transformer enclosure should be grounded by a ground strap, or equivalent, to protective earth. Induced currents in enclosure or clamping structure during energizing or in normal operation should not cause arcing.

Propulsion transformers should have a copper shield between primary and secondary windings for reducing conductor borne noise and to reduce the risk for creepage and flashover between primary and secondary windings. This may be omitted when converter is equipped with EMI filters at line supply, but then an over-voltage limiting device should be installed on the outputs of a step-down transformer.

The primary windings should be equipped with full capacity taps at 2.5% and 5% above and below normal voltage taps.

Sufficient space should be provided for termination of the required number of incoming and outgoing cables. Cables should be supported at a distance of a maximum of 600 mm.

Access panels for inspection or cable termination work should be bolted or locked. Locking of hatches that can be opened without a tool or key, e.g. handles, is not acceptable. The transformer should be clearly marked on enclosure and all access panels by warning signs: If greater than 1000 V, “Danger—High Voltage <voltage level>,” or if lower voltages, “Danger—<voltage level>”.

Terminals for instrumentation should be separated from power supplies, in a separate or in a two-compartment junction box with EMI suppressing device. The propulsion transformers should be equipped with the following instrumentation:

Propulsion transformers should be provided with means for obtaining the temperatures of the windings, as shown in Table 33. The temperatures are to be displayed at a convenient location such as the main control console. A remote audible alarm actuated when thermal limits are exceeded should be provided. For transformers with a heat exchanger type closed-circuit cooling method, either the flow of primary and secondary coolants or the winding temperatures should be monitored and alarmed. Liquid coolant leakage detection should be provided and alarmed if applicable. Such detectors should be provided for all sizes of propulsion transformers and not limited to units of certain sizes and rating.

Table 33—Temperature measurement points—propulsion transformer

Sensor	Location	Function	Comment
Winding temperature	Secondary windings	Warning + trip	In hot spot[a]
Cooling air temperature	Cold air	Warning	If water cooled[b]
Water leakage indicator	Heat exchanger	Warning	If water cooled[c]
Pressure switch	In transformer house	Trip	If liquid filled

[a]Minimum one + one spare. 3-wire PT100 or equivalent.
Warning + trip limit to be advised by vendor.

Copyright © 2002 IEEE. All rights reserved.

Copyright The Institute of Electrical and Electronics Engineers, Inc.
Provided by IHS under license with IEEE
No reproduction or networking permitted without license from IHS
Not for Resale

[b]Minimum one + one spare per cooling circuit. 3-wire PT100 or equivalent.
Warning limit to be advised by vendor.
[c]Passive level switch.

31.7 Propulsion motors

31.7.1 General

Propulsion motors should be of substantial and rugged construction, and motor construction should be in accordance with Clause 13, with additional requirements described in this clause.

Static converter fed propulsion motors should be designed and rated for starting and operation in a adjustable speed drive without any degradation of the insulation, degradation of commutation, and derating. All windings should utilize Class F or H insulation systems that resist moisture, oil vapor, and salt air. In lieu of detailed calculation of additional losses, e.g., due to harmonic currents, the windings should utilize a 55 °C temperature rise over the ambient temperature.

Propulsion motors should be enclosed and ventilated and should be provided with forced ventilation when required by the service. The exhaust air should be discharged through ducts from the motor enclosure. These ducts should be arranged to prevent the entrance of water or foreign material. Ventilation may be provided by the recirculation of air through a closed or partially closed system employing water coolers. Where the coolers are of sufficient capacity to provide 40 °C cooling air at the maximum condition, allowable temperature rises should be based on this ambient temperature. In this case, extreme care should be taken to prevent the water from entering the motor via leaking cooler tubes. The air entering the motors should be filtered to minimize the entrance of oil vapor and foreign material. Means should be provided for totally enclosing the motor when not in use if forced air-cooling is provided by external (in the weather) ventilation ducts. Abnormal brush wear and slip ring maintenance may occur in motors containing silicon materials. Silicon should not be used in any form that can release vapor in enclosed motor interiors.

Air ducts should be provided with high-temperature alarms, dampers, and means of access for inspection. Dampers need not be provided for recirculating systems.

Means should be provided to prevent circulating currents from passing between the motor shaft journal and the bearings. The lubrication of propulsion motor bearings and shafting should be effective at all normal speeds from continuous creep speeds to full speed, ahead, and astern. The shafts and bearings should be self-lubricated. They should not be damaged by slow rotation, under any operational temperature conditions, either when electrical power is applied to the motor or when the propellers may induce rotation.

Pressure or gravity lubrication systems, if used, should be fitted with a low oil pressure alarm and provided with an alternative means of lubrication, such as an automatically operated standby pump, an automatic gravity supply reservoir, or oil rings.

If the insulation is not comprising self-extinguishing material, provisions for a fire extinguishing system suitable for fires in electrical equipment should be provided for motors that are enclosed or in which the air gap is not directly exposed.

Effective means, such as electric heating, should be provided to prevent the accumulation of moisture from condensation when motors are idle.

Propulsion motors should be provided with means for obtaining the temperatures of the stationary windings, as shown in Table 34. The temperatures are to be displayed at a convenient location such as the main control console. A remote audible alarm actuated when thermal limits are exceeded should be provided. For machines with a heat exchanger type closed-circuit cooling method, either the flow of primary and secondary coolants or the winding temperatures should be monitored and alarmed. Liquid coolant leakage

Copyright © 2002 IEEE. All rights reserved.
Copyright The Institute of Electrical and Electronics Engineers, Inc.
Provided by IHS under license with IEEE
No reproduction or networking permitted without license from IHS
Not for Resale

detection should be provided and alarmed if applicable. Such detectors should be provided for all sizes of propulsion motors and not limited to machines of certain sizes and rating.

Table 34—Temperature measurement points—propulsion motor

Sensor	Location	Function	Comment
Stator winding temperature of ac generators	In each phase	Warning + trip	In hot spot[a]
Field winding temperature of dc generators	Field winding	Warning + trip	In hot spot[a]
Cooling air temperature	Cold air	Warning	If water cooled[b]
Water leakage indicator	Heat exchanger	Warning	If water cooled[c]

[a]Minimum one + one spare. 3-wire PT100 or equivalent.
Warning + trip limit to be advised by vendor.
[b]Minimum one + one spare per cooling circuit. 3-wire PT100 or equivalent.
Warning limit to be advised by vendor.
[c]Passive level switch.

31.7.2 Propulsion motor excitation

Each propulsion motor exciter should be supplied by a separate feeder.

There should be no overload protection in excitation circuits that would cause the opening of the circuit.

Static excitation power supplies for propulsion motors may be incorporated in the propulsion drive cabinets for the associated motor or may be in separate, free-standing cabinets in the drive or motor room. The standby propulsion exciter power supply should be physically and electrically isolated from the main excitation power supplies and should incorporate an output transfer switch to apply excitation power to the main propulsion systems.

Motor drive should be stopped and should reduce the motor voltage to zero after opening of the field circuit. In constant voltage systems with two or more independently controlled motors in parallel on the same generator, the motor circuit breaker should be tripped when the excitation circuit is opened by a switch or contactor.

31.7.3 AC propulsion motors

Motors should be polyphase with a voltage between phases not exceeding 13 800 V.

The rating of the propulsion motor should consider the power needed to fulfill thrust requirements both for bollard pull conditions (dynamic positioning or maneuvering) as well as for sailing conditions. Propulsion motor torque, power, and speed characteristics should conform to the propeller characteristics provided by the propeller vendor.

31.7.4 DC propulsion motors

The voltage of any single-motor armature should not exceed 1000 V. Where multiple motor armatures are used in series and the voltage exceeds 1000 V, the system should be such that one or more generators are

Copyright © 2002 IEEE. All rights reserved.

Copyright The Institute of Electrical and Electronics Engineers, Inc.
Provided by IHS under license with IEEE
No reproduction or networking permitted without license from IHS
Not for Resale

interspersed between the armatures, or some other arrangement employed, so that the voltage between any two points of the system is reduced to a value not in excess of 1000 V.

DC propulsion motors should have a 5% for 30-min torque overload rating and should withstand 125% of rated armature current for 10 min and 200% of rated field voltage for 10 min. The motors should be furnished with commutating poles and compensating windings.

31.8 Propulsion power conversion equipment

The propulsion power conversion equipment should fulfill applicable requirements, class rules, and regulations and comply with either IEC 60146, 61136-1, -2, -3, or design guidelines of IEEE Std 519-1992 to the maximum extent practicable. The equipment should be designed for continuous operation within the maximum ambient and cooling water temperatures (if water-cooled) without reduction of the equipment's rated performance criteria.

If drives are fitted with forced-ventilation or water cooling, means should be provided to monitor the cooling system. In the case of a cooling system failure, the current should be reduced automatically to avoid overheating, or the converter may shut down if necessary. Failure of the cooling system or automatic reduction of current should be indicated by an audible and visual alarm in the engine control room and wheelhouse. The alarm signal can be generated by a reduction in the flow of liquid coolant, by loss of the electric supply to the ventilation fans, or by an increase in temperature of semiconductor's heat sink or equivalent alternatives.

Drive enclosures and other parts subject to corrosion should be made of corrosion-resistant material or of a material rendered corrosion resistant.

The static power converters should be mounted in such a manner that they may be removed without dismantling the unit.

Propulsion drive enclosures shall have a protection equivalent to switchboard requirements (See Clause 8). Outdoor installations should not be accepted.

Whenever power converters for propulsion are applied to integrated electric plants, the drive system should be designed to maintain and operate with the power quality of the electric plant. The effects of disturbances, both to the integrated power system and to other motor drive converters, should be regarded in the design. Attention should be paid to the power quality impact of the following:

a) Multiple drives connected to the same main power system.
b) Commutation reactance, which, if insufficient, may result in voltage distortion adversely affecting other power consumers on the distribution system. Unsuitable matching of the relation between the power generation system's subtransient reactance and the propulsion drive commutation impedance may result in production of harmonic values beyond the power quality limits.
c) Harmonic distortion can cause overheating of other elements of the distribution system and improper operation of other power consumers.
d) Adverse effects of voltage and frequency variations in regenerating mode.
e) Conducted and radiated electromagnetic interference and the introduction of high-frequency noise to adjacent sensitive circuits and control devices. Special consideration should be given for the installation, filtering, and cabling to prevent electromagnetic interference.

The following propulsion drive unit protection should be provided:

— Drive overvoltage protection by suitable devices applied to prevent damage.

Copyright © 2002 IEEE. All rights reserved.
Copyright The Institute of Electrical and Electronics Engineers, Inc.
Provided by IHS under license with IEEE
No reproduction or networking permitted without license from IHS
Not for Resale

— Semiconductor elements in static power converters should have short-circuit protection, unless they are rated for the full short-circuit available at the point of application. When fuses are used for protection, blown fuse indication should be provided.
— Load limiting control to ensure that the permissible operating current of semiconductor elements cannot be exceeded during normal operation.

The propulsion converter should be equipped with a blackout prevention function ensuring that it does not cause overload of the power generation system while ensuring power available to essential ship service loads. This should be effective in normal operations and after a fault in the power system, e.g., loss of one generator.

The propulsion converter should withstand or restart automatically after a short loss of power supply, e.g., after a cleared short-circuit in the power distribution system, if the propulsion unit is necessary to maintain the required maneuverability in the intended operation.

When maneuvering requires regenerative braking of the propulsion unit, the converter should either be equipped with load dumping resistors or regenerative line supply. Dimensioning of the dumping resistors and regenerative line supply should ensure safe dynamic operation of the vessel under all specified conditions, including crash-stop maneuver. Special attention should be made to the ability to regenerate power to the power system without causing excessive voltage and frequency variations, and the propulsion converters with regenerative line supply should provide means to limit the amount of regenerated power to a level that can be absorbed by the line network, as shown in Table 35.

Table 35—Temperature measurement points—propulsion conversion equipment

Sensor	Location	Function	Comment
Cooling media temperature	Cooling media	Warning + trip	In hot spot[a]
Cooling air temperature	Cold air	Warning	If water cooled[b]
Water leakage indicator	Heat exchanger	Warning	If water cooled[c]

[a]Minimum one + one spare. 3-wire PT100 or equivalent.
Warning + trip limit to be advised by vendor.
[b]Minimum one + one spare per cooling circuit. 3-wire PT100 or equivalent.
Warning limit to be advised by vendor.
[c]Passive level switch.

31.9 Main power switchboard

Main power switchboards for electric propulsion and integrated plant applications should fully comply with the recommendations in Clause 8.

31.10 Propulsion control equipment

Control consoles should be of substantial and rugged construction, and they should group all instruments, CRT displays, and control devices used in the operation and control of propulsion systems.

Means of control should be provided from the local drive control, engine control room, and navigation bridge. Whenever the equipment is arranged for control from two or more stations, a selector switch or equivalent should be provided for connecting the control means to the delegated station. Simultaneous control from more than one control station should not be possible.

Copyright © 2002 IEEE. All rights reserved.

Copyright The Institute of Electrical and Electronics Engineers, Inc.
Provided by IHS under license with IEEE
No reproduction or networking permitted without license from IHS
Not for Resale

Changing of the control station should be possible only when the control actuators (typically, levers) of the station in command and the incoming station are in the same position or when an acceptance signal set by the desired station is received. The transfer command must be issued, and control can be transferred only after acknowledgment from the new station in control is received.

The control system should be designed so that damage to equipment outside of the machinery space cannot prevent control from the control stations within the machinery space. Failure of power-assisted throttle controls, when used, should not result in an interruption of the power to the propulsion shaft, but should be indicated by an alarm.

All control means for operating prime movers, setup switches, contactors, field switches, and so on should be interlocked to prevent their incorrect operation.

In regulating systems with feedback control, duplex circuitry and components should be utilized to ensure a high degree of reliability. Failure of a control signal should not cause an increase in propeller speed. The reference value transmitters in the control stations and the control equipment should be so designed so that any defect in the value transmitters or in the cables between the control station and the propulsion system will not cause an increase in the propeller speed.

The control of the propulsion system should be initially activated only when the assigned control lever is in the “zero” or “stop” position and the system has main and control power available and ready for operation. Each control station should have an emergency stop device that is independent of the control lever. Where navigating bridge and other remote propulsion control stations are installed, indicating lights should be provided at each control station to indicate which station is in control.

The control consoles should be designed with a structural steel frame, marine grade aluminum, or durable nonconductive material. Instrument panels should be made of sheet steel. The control consoles should be protected at the side and back with panels with ventilation louvers as required. A warning nameplate, giving the maximum voltage inside the enclosure, should be provided on all doors, providing access to the enclosure.

Means should be provided at each propulsion control console for continuously monitoring prime mover output power. Indication should be provided when current or power limiting is in operation.

The following instruments and meters should be mounted or be available in a graphical user interface on control consoles, as shown in Table 36.

Table 36—Propulsion control instruments and meters

	Main control room	Engine control room	Other control stations
a) For each primer mover: 1) Power (kW)	 X	 X	
b) For each generator: 1) Armature current (A) 2) Armature voltage (V or kV) 3) Power factor (for ac generators)	 X X X	 X X X	
c) For each power generation bus: 1) Frequency (Hz) 2) Available power	 X X	 X X	

Copyright © 2002 IEEE. All rights reserved.
Copyright The Institute of Electrical and Electronics Engineers, Inc.
Provided by IHS under license with IEEE
No reproduction or networking permitted without license from IHS
Not for Resale

Table 36—Propulsion control instruments and meters *(continued)*

	Main control room	Engine control room	Other control stations
d) For each propulsion drive:			
1) AC propulsion:			
i) Input current (A)	X	X	
ii) Motor power (kW)	X	X	
iii) Field current of synchronous motors (A)	X	X	
2) DC propulsion:			
i) Armature current (A)	X	X	
ii) Armature voltage (V or kV)	X	X	
iii) Current in individual paralleled rectifier bridges (A)	X	X	
e) For each propeller (as applicable):			
1) Azimuth steering angle (degrees)	X	X	X
2) Rudder angle (degrees)	X	X	X
3) Speed indicator (propeller rpm)	X	X	X

The propulsion system control consoles should have at least the following indications for each propeller:

a) "System Ready": Power circuits and necessary auxiliaries are in operation and ready to accept control commands.
b) "System Fault": System cannot respond to control commands; propeller not under control.
c) "Power Limit": System disturbance. For example, loss of ventilation for propulsion motors or drives, loss of cooling water supply, or loss of motor power level limited due to insufficient generator capacity. Control commands restricted.

If the main control console is not located in the engine room, or if the prime-mover gauges cannot be conveniently read from the control console, principal prime-mover parameters should be displayed at the main control console. A clock with digital display fed from the control system master clock should be mounted in each control console.

All ammeters and wattmeters should be marked in red at the rated value of the circuit in which they are connected. Metal cases of instruments should be grounded. Secondaries of all instrument transformers should be grounded.

Control transfer capability should be incorporated in the drive control section, with local manual transfer switching at the drive and remote transfer capability from the engine room console. Emergency local control should be included in the drive control section or from a separate control panel in the propulsion room. Emergency control shall be independent from remote control system.

A framed wiring diagram showing the complete propulsion system schematic should be located near the main control console, and alternately be presented in the graphical user interface.

Copyright © 2002 IEEE. All rights reserved.

Copyright The Institute of Electrical and Electronics Engineers, Inc.
Provided by IHS under license with IEEE
No reproduction or networking permitted without license from IHS
Not for Resale

31.11 Power management

For power systems consisting of generators operating in parallel, there should be an intelligent electronic device (computer system) for automatic power management, which will ensure adequate power generation to meet safe propulsion requirement. The power management system should control load sharing between on-line generators and execute load reduction or load tripping of nonessential suppliers when the power plant is overloaded.

The machinery control system should be designed to prevent overloading the prime mover and the generators by limiting the propulsion power. The load limiting circuits should ensure that essential requirements of the ship service system have priority over propulsion under all conditions. An audible and visual alarm should be installed at each throttle location and should operate when the load limiting circuitry restricts the available propulsion power/current in order to maintain power to essential ship service loads.

Where the electrical system arrangements permit a propulsion motor to be connected to a generating plant having a continuous rating greater than the motor rating, means should be provided to limit the continuous input to the motor to a value not exceeding the load capability of the propulsion unit.

31.12 Failure mode and effect analysis (FMEA)

A failure analysis methodology is used during design to postulate every failure mode and the corresponding effect or consequences. Generally, the analysis is to begin by selecting the lowest level of interest (part, circuit, or module level). The various failure modes that can occur for each item at this level are identified and enumerated. The effect for each failure mode, taken singly and in turn, is to be interpreted as a failure mode for the next higher functional level. Successive interpretations will result in the identification of the effect at the highest function level, or the final consequence. A tabular format is normally used to record the results of such a study. FMEA should be certified and acceptable to the authority having jurisdiction.

31.13 Podded propulsion

31.13.1 General

Podded propulsion systems consist of an electric motor placed in a housing located under the hull of the vessel. The electrical motor is directly connected to one or two propellers. The pod is steerable or fixed. A steerable podded propulsion unit constitutes both propulsion machinery and the steering system.

The requirements of the IEC standards, especially the shipbuilding related standards of the serial IEC 60092, have to be fulfilled.

31.13.2 Pod unit

31.13.2.1 Electric motor

The electric motor can be an induction (asynchronous) motor, a synchronous motor, or a permanent magnet motor. If the vessel is equipped with only one podded propulsor, the motor should consist of at least two electrically independent winding systems.

The electric motor should be designed in accordance to 31.7.

Copyright © 2002 IEEE. All rights reserved.
Copyright The Institute of Electrical and Electronics Engineers, Inc.
Provided by IHS under license with IEEE
No reproduction or networking permitted without license from IHS
Not for Resale

31.13.2.2 Power transmission system

Power transmission between rotatable and fixed unit components shall either by slip ring assembly or by flexible cable supply power continuously. If slip ring units are used, it shall be possible to install provisions for detecting sparking. The brushes shall be visible for inspection during operation. The degree of protection shall be at least NEMA 4x or equivalent IP enclosure (see Annex C). Flexible connection for fluids shall be avoided. Any damage to the fluid connection shall not lead to liquid penetration to essential electrical equipment.

31.13.2.3 Steering system

The steering gear system should be of electrohydraulic or electrical type. If the pod is used as a steering device, class and regulatory requirements for steering systems shall apply for the pod steering system and the term *rudder angle* should be interpreted as *pod azimuth angle*.

The podded propulsion unit should be provided with a dual redundant steering system. If more than one azimuthing pod is provided, each shall have a fully independent steering system. The steering system should be capable of moving, stopping, and holding the pod unit at any desired angle within design limits. Requirements for steering gear (Clause 32) apply as far as possible.

31.13.2.4 Shaft, bearing, sealing systems, and the propellers

Provisions for continuously or regularly monitoring shall be installed. If water leakage in shaft sealing may penetrate into the vessel's hull, the water shall be collected in a bilge system equipped with pumps.

31.13.2.5 Ventilation and cooling unit

Ventilation and cooling systems should ensure that under maximum operating conditions, the electrical motor will not exceed the maximum temperature limits. The systems should be designed so that a single failure of the ventilation and cooling system will not lead to loss of propulsion power. The ventilation systems shall be monitored for proper operation. The air flow into the electrical motor should be filtered, and other measures be taken to avoid accidental intake of foreign bodies.

31.13.2.6 Auxiliary systems

All essential auxiliary systems shall be placed as close to the pod unit as possible. They shall be monitored and supplied from at least two different sources of electrical power for redundancy purposes.

31.14 Propulsion cables

Propulsion cable and cable installation should be as required by Clause 24 and Clause 25. Special considerations should be made to the harmonic losses and for attenuation of EMI when selecting cable, as recommended by the vendor of the propulsion converter. Propulsion cable should not have any splice or joint. For parallel-connected semiconductor devices, an equal current distribution should be ensured.

31.15 Tests

31.15.1 Generators and motors

Generators and motors should successfully pass the following tests at the place of manufacture. The following tests should be conducted in accordance with IEC60034 or IEEE Std 112-1996, IEEE Std 115-1995, or ANSI/NEMA MG 1-1998, as applicable:

Copyright © 2002 IEEE. All rights reserved.

Copyright The Institute of Electrical and Electronics Engineers, Inc.
Provided by IHS under license with IEEE
No reproduction or networking permitted without license from IHS
Not for Resale

a) Temperature rise under rated load or rated current conditions
b) Dielectric strength of insulation
c) Overload capacity, as specified
d) Cold resistance of all circuits
e) Mechanical balance (special considerations should be made on differences in stiffness of test bed and the actual installation)

31.15.2 Control equipment

Controls for electric propulsion equipment should be inspected when finished, and dielectric strength tests and insulation resistance measurements should be made on the various circuits at the place of manufacture. The functional operation of controls and displays, and satisfactory tripping and operation of all relays, contactors, and various safety devices, should also be demonstrated.

31.15.3 Motor drives

Semiconductor static power converters for propulsion system drives should be tested and inspected at the place of manufacture. Duplicate units of previously tested power converters need be tested only as deemed necessary to demonstrate successful operation.

31.16 Propulsion equipment location

Equipment should be located where it will not to be exposed to mechanical damage or to damage from water, heat, steam, or oil. Equipment should be placed in well-ventilated compartments in which flammable gases and acid fumes cannot accumulate. Consideration should be given to locating the main power switchboard such that it will not be damaged in case of collision or grounding of the ship. The machinery should be arranged to provide ample access for inspection, adjustment, disassembly, and repair. A watertight well, with a provision for draining, should be provided around the base of the propulsion motors. Equipment should be located to avoid damage from bilge water. For purposes of motor inspection and repair, provision should be made for access to the stator and rotor coils, and for the withdrawal and replacement of field coils.

31.17 Ventilation

All areas of the engine room, propulsion equipment rooms, and motor rooms should be thoroughly ventilated to avoid hot air pockets. Gratings should be used where deck plates would interfere with proper ventilation of the electric machinery. Main control rooms should be air-conditioned. When ventilation ducts are provided, they should be so arranged that water or foreign material from outside is not directed at the machinery.

31.18 Bed-plates and foundations

Bed-plates, sub-bases, feet of propulsion motors, and pod assemblies should be of rugged construction, arranged for fitted bolts, and secured to the structural foundations. Generators and associated prime movers should be resiliently mounted to their foundations if required for noise and vibration purposes.

Switchboards, power converter cabinets, and control consoles should be secured to a solid foundation and may be either self-supporting or braced to the bulkhead or deck above. When braced to the deck above, the bracing should be flexible to allow deflection of the deck without buckling the assembly structure. Units should be located away from, or protected against, sources of dripping liquid.

Copyright © 2002 IEEE. All rights reserved.
Copyright The Institute of Electrical and Electronics Engineers, Inc.
Provided by IHS under license with IEEE
No reproduction or networking permitted without license from IHS
Not for Resale

31.19 Lubrication

Propulsion motors using forced external pressure or gravity lubrication for bearings should be provided with an independent spare lubricating oil pump. Where oil coolers are used, two separate means should be provided for circulating water through the coolers. An alarm system should be installed in connection with all external lubricating oil systems (see 9.10). Systems depending on forced lubrication, pressure, or gravity should be arranged to shut down automatically on loss of oil pressure. The oil discharge from each forced lubricated main bearing should be visible. The lubricating oil system should be designed to prevent oil from coming in contact with parts having a temperature in excess of 343 °C. Means should be provided to determine the temperature of oil leaving bearings.

Lubricating oil cooling should be provided. Extreme care should be taken to prevent the contamination of the oil supply by water or other extraneous matter, and the cooling water pressure should be less than the oil pressure. Oil filters or separators should be installed. The flash point of the lubricating oil should in no case be below 175 °C.

Oil guards should be provided if necessary to prevent oil from creeping along the shaft to machine windings. Precautions should be taken to prevent oil vapors from passing into the generator windings. Openings in machines for oil vents and thermometer wells should be constructed so that vapor cannot escape into the windings.

The propulsion motor bearings and shaft bearings should lubricate and operate successfully in all operating speeds.

31.20 Fire extinguishers

In addition to any fixed fire extinguishing systems, portable fire extinguishers should be provided in the vicinity of propulsion equipment.

31.21 Protection during storage and installation

All equipment should be protected as effectively as possible during storage and installation. From the time diesel engines, gas turbines, generators, drives, and motors for electric propulsion are completely tested until installation is completed and the vessel placed in service, special precautions should be taken to protect the machinery. All equipment should be located in a warehouse and protected during the period of storage to prevent the entrance of foreign matter, and to prevent wide and sudden internal temperature changes in the equipment. Covers should be used over all external openings in ac and dc apparatus.

During storage, machinery should be periodically inspected. When stored for an extended period, equipment should be given any special care recommended by the manufacturer. All shaft-machined surfaces should be thoroughly coated with a suitable rust-preventing compound that can be removed readily. Particular precaution should be taken to protect the equipment during the installation period.

31.22 System operation and maintenance

31.22.1 Fire extinguishing precautions

Arrangements should be made to shut off the generator, motor, motor drives, and propulsion control power supply when the fire extinguishing systems are operated.

Copyright © 2002 IEEE. All rights reserved.

Copyright The Institute of Electrical and Electronics Engineers, Inc.
Provided by IHS under license with IEEE
No reproduction or networking permitted without license from IHS
Not for Resale

31.22.2 Cleanliness

Both the interior and exterior of machines should be kept free from dirt, dust, oil, or salt. Oil should be prevented from entering the machine with the cooling air. Insulation maintenance should be in accordance with IEEE Std 432-1992 or equivalent IEC requirements. As an excessive accumulation of dirt may eventually ground the coils and cause winding failure, machines that have an accumulation of dirt and oil should be thoroughly cleaned with nonflammable solvents. The ends of the stator and rotor coils should be wiped and any salt coating removed using fresh water, if necessary. It is essential to keep the air ducts in the stator core and the ventilating holes in the rotor retaining rings free from dirt accumulations, as any restriction in these passages can seriously interfere with the flow of air necessary for proper cooling. Dirt is also a heat insulator, and accumulations can cause increased temperatures. Vacuum cleaning is the most effective means of cleaning the interior of a machine. If compressed air is used for cleaning, care should be taken to ensure the air stream is free of water and other contaminants. Electrical equipment used in dusty locations should be vacuumed frequently.

DC machines accumulate conductive carbon dust from brush wear and require special attention to prevent the carbon dust from decreasing insulation resistance.

Although generators and motors are constructed with moisture-resistant insulation, the reliability of operation and the equipment life will be enhanced by keeping the insulation clean and dry.

31.22.3 Care of idle apparatus

The insulation resistance should be measured in equipment idle for a long time either during the installation period or due to interrupted service. It is recommended that a log sheet be maintained for recording the insulation resistance monthly, so that deteriorating conditions can be detected.

Cable insulation resistance should be measured by self-contained instruments, such as a direct indicating ohmmeter of the generator type, applying a dc potential of 500 V. Where the operating voltage is greater than 500 V, the test instrument should apply a dc potential approximately equal to the operating voltage. Where circuits contain solid-state devices, care should be taken to ensure that devices having a voltage rating less than the test voltage are disconnected or shorted-out before the test voltage is applied. The insulation resistance test should be made with all circuits of equal voltage above ground connected together. Circuits or groups of circuits of different voltages above ground should be tested separately.

32. Steering systems

32.1 General

An automatic steering control system consists of the following apparatus:

a) A heading data sensor consisting of a gyrocompass, a sensor equipped magnetic compass, or both
b) A device for defining the prescribed course
c) Error sensors to measure the difference between the actual heading and prescribed courses
d) A heading control system
e) A rudder position indicator and rate of turn indicator
f) A rudder control system
g) Power supplies for the automatic steering control system
h) An alarm circuit to indicate electrical supply failure or other major malfunction, including divergence of the actual and prescribed course by more than a set amount
i) Additional circuits such as manual auxiliary rudder controls, override controls, or interfaces to navigation systems for the purpose of automatic changing of the prescribed course

Copyright © 2002 IEEE. All rights reserved.
Copyright The Institute of Electrical and Electronics Engineers, Inc.
Provided by IHS under license with IEEE
No reproduction or networking permitted without license from IHS
Not for Resale

In the past, the division between an autopilot (frequently referred to as a gyropilot) and the electric, mechanical, or hydraulic portion of the steering system that actually moved the rudder(s) was separate and distinct. The small size of the modern electronic autopilot permits the steering stand to include the manual wheel for follow-up steering, nonfollow-up controls, steering pump controls, and indicators for rudder order and rudder position.

32.2 Navigating bridge installation

The arrangement of the steering controls in the navigating bridge should provide full follow-up control of the rudder. In addition, the following installation details apply:

a) The arrangement of the steering station should be such that the helmsman is abaft the steering device and can readily observe all steering indicators and controls.
b) A suitable notice should be installed directly in the helmsman's line of vision, to indicate the direction in which the steering device must be turned for "right rudder" and "left rudder."
c) There should be an indication at the steering station as to what steering control system and pumps are being used.

32.3 Power supply

The steering control system power supply should be fed from the same feeder(s) as the steering gear (see 32.5).

32.4 Alarm system

Required alarms (see 32.6.4) are frequently included in the autopilot stand.

32.5 Steering gear

32.5.1 General

When the main and auxiliary steering gears are electrically powered and controlled or when an arrangement of two or more identical power units are utilized, the vessel should have two separate steering systems, each consisting of a power unit, steering control system, steering gear feeder, and associated cable and ancillary equipment. The two systems should be separate and independent on a port and starboard basis.

Each steering gear motor controller should include the following apparatus:

a) Power input disconnect switch or nonautomatic circuit breaker
b) Power available indicator light
c) Steering motor START/STOP pushbutton
d) Motor running indicator light
e) Steering control system power supply transformer
f) Steering control power supply transformer output circuit breaker having only an instantaneous trip
g) Control power available indicator light
h) Steering control power transfer switch, LOCAL/NAVIGATING BRIDGE
i) Steering motor overload alarm relay
j) Input power failure alarm relay
k) Control power failure alarm relay
l) Phase failure trip relay (for three-phase fused power sources)

--`,,`-`-`,,`,,`,`,,`---
Copyright © 2002 IEEE. All rights reserved.

Copyright The Institute of Electrical and Electronics Engineers, Inc.
Provided by IHS under license with IEEE
No reproduction or networking permitted without license from IHS
Not for Resale

32.5.2 Feeder circuits

Vessels with one or more electric-driven steering power units should have at least two feeder circuits. One of these feeder circuits should be supplied from the main switchboard. On vessels where the rudder stock is required to be over 230 mm in diameter in way of the tiller (excluding strengthening for navigation in ice) and an emergency power source is required, the other feeder circuit should be supplied from the emergency switchboard or an alternative power supply. Where an alternative power supply is provided, it should be available automatically within 45 s of loss of power supply from the main switchboard, be located in the steering gear compartment, and be used for no other purpose. The alternative power supply should have capacity sufficient for one-half hour of continuous operation of the rudder from 15° on one side to 15° on the other side in not more than 60 s, with the ship at its deepest sea-going draft while running at one-half of its maximum ahead service speed or 7 kn, whichever is the greater.

Vessels that have a steering gear with two electric motor-driven power units should be arranged so that one power unit is supplied by one feeder and the other power unit is supplied by the other feeder. Each steering gear feeder circuit should be separated as widely as practicable from the other and should have a disconnect switch in the steering gear room. Each feeder circuit should have a current-carrying capacity of 125% of the full-load current rating of the electric steering gear motor or power unit plus 100% of the normal current of one steering control system, including any associated motors.

The overcurrent protection for each steering gear circuit at the main and emergency switchboards should be an instantaneous circuit breaker set to trip at not less than 200% of the locked rotor current of one steering gear motor plus other loads that may be on this feeder for ac installations. For dc installations, the instantaneous trip should be set not less than 300% and not more than 375% of the rating of the steering gear motor. No other overload device or fuse that will open the power circuit should be provided in the motor or control circuits.

The opening of the main or emergency switchboard steering gear circuit breaker should operate audible and visual alarms located at the main propulsion control station and the navigating bridge.

Each steering gear motor circuit should be equipped with an overcurrent relay to operate audible and visual alarms located at the main propulsion control station and the navigating bridge. No other functions should be performed by this relay.

The steering gear motor circuit should be capable of accelerating the motor under a torque requiring a current of 150% of motor rating. If the inherent design of the steering gear does not prevent overhauling of the rudder, a magnetic brake should be installed.

A pilot light for each steering gear motor to indicate motor running should be provided at the main propulsion control station and the navigating bridge. This pilot light should be fused.

32.5.3 Direct-drive steering gear

The control for direct-drive ac steering motors should be of the solid-state, reversible, variable-speed drive type. For direct-drive dc motor installations, the control may be rheostatic or variable voltage. These controls should include step-back overload protection without opening the circuit.

32.6 Steering control systems

32.6.1 General

Electric control may be of the self-synchronous “follow-up” type or “non-follow-up” type.

Copyright © 2002 IEEE. All rights reserved.
Copyright The Institute of Electrical and Electronics Engineers, Inc.
Provided by IHS under license with IEEE
No reproduction or networking permitted without license from IHS
Not for Resale

The "follow-up" type uses a remotely controlled servomotor that, by means of signal feedback, gives a definite rudder position for each steering wheel position. A follow-up control system may be provided that produces at the steering gear machinery a motion and positioning that is in synchronism with the position and motion of the steering wheel in the remote location.

The "non-follow-up" type electric control consists of a master switch with spring return to the OFF position, which gives right or left rudder motion. Rudder motion is continuous in the direction indicated, until the limits of travel of the rudder are reached or the master switch returned to the OFF position. The rudder remains in the last ordered position until the master switch is moved from the OFF position.

Any of these electrically powered systems may function in conjunction with automatic steering systems. See Clause 30.

32.6.2 Steering control system installation

Each steering power unit should have at least one steering control system capable of being operated from the navigating bridge. Additional control stations may be provided as required elsewhere on the ship. Each steering control system on vessels of 300 gross tons and above should be arranged so that each steering gear power unit can be controlled in the steering gear room. A selector switch should be provided in the navigating bridge for delegating the control to any one of these stations. All circuits from each steering station should be entirely disconnected by the selector switch, except those circuits to the station in use. A rudder angle indicator should be provided at each such station (see 26.3).

The steering control system for a steering power unit should be separated as widely as practicable from each other steering control system and each steering power unit that it does not control.

Each navigating bridge steering control system should have a switch in the navigating bridge that is arranged in such a way that one action of the switch's handle automatically puts into operation a complete steering control system and associated steering power units. If there is more than one steering control system, this switch should be

a) Operated by one handle
b) Arranged so that each one individually or both steering control systems and all associated steering power units can be energized from the navigating bridge
c) Arranged so that the handle passes through an "off" position when transferring from one steering control mode to another
d) Arranged so that the switches for each system are in separate enclosures or separated by fire-resistant barriers

Each steering control system should receive its power from the feeder circuit for its steering power unit in the steering gear room and have a switch that is in the steering gear room and disconnects the steering control system from its power source. Each motor controller for a steering gear should be in the steering gear room and have low-voltage release. A means should be provided to start and stop each steering gear motor in the steering gear room.

32.6.3 Steering indication and alarm system

A steering indication and alarm panel should be installed at the main propulsion control station and in the navigating bridge. The following items should be provided:

a) A motor running indicator light for each steering power unit
b) A control power available indicator light for each steering control system

Copyright © 2002 IEEE. All rights reserved.

Copyright The Institute of Electrical and Electronics Engineers, Inc.
Provided by IHS under license with IEEE
No reproduction or networking permitted without license from IHS
Not for Resale

c) Visual and audible alarms for

1) Low oil level in each hydraulic oil reservoir
2) Steering power unit motor overload
3) Power supply failure to steering power unit
4) Power supply failure to steering control system
5) Hydraulic lock-mismatch of steering order with steering machinery response signal

A common audible alarm may be used in conjunction with individual visual alarm indicators. Steering indication and alarm functions may be included with other vital alarm functions in a common panel or console, but should be grouped and clearly marked as steering system alarms.

32.6.4 Steering failure alarm system

Each vessel that has power-driven main or auxiliary steering gear should have a steering failure alarm system that actuates an audible and visible alarm in the navigating bridge when the actual position of the rudder differs by more than 5° from the rudder position ordered by the follow-up control systems for more than

a) 30 s for ordered rudder position changes of 70°
b) 6.5 s for ordered rudder position changes of 5°
c) The time period calculated by the following formula [Equation (4)] for ordered rudder position changes between 5° and 70°:

$$t = (R/2.76) + 4.64 \quad (4)$$

where

t is the maximum time delay in seconds

R is the ordered rudder change in degrees

The alarm system should be separate from, and independent of, each steering gear control system, except for input received from the steering wheel shaft.

Each steering failure alarm system should be supplied by a circuit that

— Is independent of other steering gear system and steering alarm circuits
— Is fed from the emergency power source through the emergency distribution panel in the navigating bridge, if installed
— Has no overcurrent protection except short-circuit protection by an instantaneous fuse or circuit breaker rated or set at 300% of either the current-carrying capacity of the smallest alarm system interconnecting conductors or the normal load of the system

33. Hazardous locations, installations, and equipment

33.1 General

Hazardous (classified) locations are those locations (areas) where fire or explosion hazards may exist due to the presence of flammable gases or vapors, flammable liquids, combustible dust, or ignitable fibers or flyings. Electrical equipment and wiring should not be installed in such locations unless essential for operational purposes. When electrical equipment is installed in these locations, special precautions should be taken to ensure that the electrical equipment is not a source of ignition. All electrical equipment installed

Copyright © 2002 IEEE. All rights reserved.
Copyright The Institute of Electrical and Electronics Engineers, Inc.
Provided by IHS under license with IEEE
No reproduction or networking permitted without license from IHS
Not for Resale

in hazardous locations should be suitable for the specific classification of the space or area in which it is installed.

33.2 Hazardous area classification

Hazardous locations are established depending on the properties of the flammable vapors, liquids, or gases, or combustible dusts or fibers that may be present, and the likelihood that a flammable or combustible concentration or quantity is present. Examples of where flammable gases or vapors may exist include battery rooms, paint lockers, pump rooms, cargo tanks, and weather deck locations above cargo tanks on tank vessels, and examples of where combustible dusts may exist include the interior of coal bins and cargo holds in vessels carrying coal.

The National Electrical Code (NEC) classifies hazardous locations as "Divisions" in Article 500. The type of explosive hazard (gases or vapors, dusts, fibers) and the likelihood of its presence, the "Class" and "Division," respectively, are the determining factors for the designation of the classified location. The NEC classifies gas, vapor, and combustible liquid hazards as "Class I," dust hazards as "Class II," and fibers and flyings hazards as "Class III." In each class, locations are designated "Division 1" or "Division 2," depending on the likelihood of the presence of the hazardous gas, vapor, dust, or flyings. Division 1 locations are more likely to have the hazard present than are Division 2 locations. A specific "Group" designation is assigned based on the particular characteristics of the atmosphere (e.g., Group A for atmospheres containing acetylene).

The International Electrotechnical Commission (IEC) consists of the National Committees of over 40 participating countries and cooperates in international standardization with organizations like the International Standards Organization (IS0) and the IEEE. The IEC has developed hazardous location standards that have been adopted in many countries. United States and Canadian standards are similar but have evolved separately based on the requirements of the (U.S.) National Electrical Code and the Canadian Electrical Code. Certain IEC standards have been normalized (i.e., accepted, but possibly with certain national deviations) to American National Standards. Reference, for example, ISA S 12.24.01 (IEC 60079-10 MOD).

The NEC "division" classification scheme defines the hazard that is present and the likelihood that the hazard will be present. The traditional NEC approach uses a system of three classes to define the hazard, as follows:

- Class I: Flammable gases and vapors
- Class II: Combustible dusts
- Class III: Ignitable fibers or flyings

The NEC identifies Class I "groups" based on the characteristics of the gas or vapor that may be present, including maximum experimental safe gap (MESG) or the minimum igniting current (MIC) ratio of the particular gas or vapor. In the Division scheme, flammable gases and vapors are grouped as follows:

- Group A: The only gas included in Group A is acetylene.
- Group B: The MESG is less than or equal to 0.45 mm, or the MIC ratio is less than or equal to 0.40. Hydrogen is a typical Group B material.
- Group C: The MESG is greater than 0.45 mm and less than or equal to 0.75 mm, or the MIC ratio is greater than 0.40 and less than or equal to 0.80. Ethylene is a typical Group C material.
- Group D: The MESG is greater than 0.75 mm, or the MIC ratio is greater than 0.80. Propane is a typical Group D material.

In the Zone scheme, the subgroups representing the different categories of flammable gases and vapors are grouped as follows:

Copyright © 2002 IEEE. All rights reserved.

Copyright The Institute of Electrical and Electronics Engineers, Inc.
Provided by IHS under license with IEEE
No reproduction or networking permitted without license from IHS
Not for Resale

— Group IIC: The MESG is less than or equal to 0.50 mm, or the MIC ratio is less than or equal to 0.45. Acetylene and hydrogen are typical Group IIC materials.
— Group IIB: The MESG is greater than 0.50 mm and less than or equal to 0.90 mm, or the MIC ratio is greater than 0.45 and less than or equal to 0.80. Ethylene is a typical Group IIB material.
— Group IIA: The MESG is greater than 0.90 mm, or the MIC ratio is greater than 0.80. Propane is a typical Group IIA material.

Note that both acetylene and hydrogen are in the same group in the Zone system, as opposed to different groups in the Division scheme.

To represent the likelihood of the hazard being present, the NEC Division scheme uses two location classification levels, based on the hazard probabilities during normal and abnormal operations:

— Division 1: Locations where ignitable concentrations of flammable gases or vapors can exist under normal operating conditions, or frequently because of repair, maintenance, or leakage.
— Division 2: Locations where ignitable concentrations of flammable gases or vapors can exist under abnormal conditions (e.g., accidental rupture and equipment breakdown) or locations adjacent to Division 1 locations from which hazardous material may occasionally be communicated.

NOTE—Although not defined by the NEC, there is a need for further defining an area of specific increased hazard due to a higher likelihood of the presence of ignitable concentrations of flammable gases or vapors. API RP500 refers to these areas as “Special Division 1 locations,” and the same designation will be used in this subclause.

Hazardous areas involving dusts and easily ignitable fibers for the Division scheme are addressed in Articles 502 and 503 of the NEC, respectively. Reference the NEC for further information concerning the groups for combustible dusts.

The Zone scheme described in NEC Article 505 is a second hazardous location classification scheme that is comparable to the IEC Zone method. The Zone scheme uses three-location classification levels based on the hazard probabilities during normal and abnormal operations:

— Zone 0: An explosive gas (vapor)/air mixture is always present or present for extended periods during normal operations. (An example of Zone 0 is the air space in an atmospheric tank containing a flammable liquid.)
— Zone 1: An explosive gas/air mixture is likely to occur in normal operation.
— Zone 2: An explosive gas/air mixture is not likely to occur in normal operation, and if it occurs, it only exists for a short time.

Hazardous areas involving dusts and easily ignitable fibers are not addressed by the NEC for “Zones.”

Classification of spaces adjacent to hazardous locations is dependent on many factors such as access doors, opening, and ventilation. In general, fitting adjacent spaces with an airtight door is sufficient to downgrade the hazardous area by one Division or Zone (e.g., from Division 1 to Division 2) if an appropriate ventilation scheme is provided. Reference 12.5 of API RP 500-1997 or API RP 505-1997, as applicable, for guidance on the classification of adjacent spaces.

33.3 Area classification for various vessel types

Locations should be classified in accordance with the general guidance of, and the applicable specific portions of, RP 500, Classification of Locations for Electrical Installations at Petroleum Facilities Classified as Class I, Division 1 and Division 2, or RP 505, Classification of Locations for Electrical Installations at Petroleum Facilities Classified as Class I, Zone 0, Zone 1, and Zone 2, as applicable. Recommendations are addressed for specific vessel types in 33.3.1 through 33.3.2.4.

Copyright © 2002 IEEE. All rights reserved.
Copyright The Institute of Electrical and Electronics Engineers, Inc.
Provided by IHS under license with IEEE
No reproduction or networking permitted without license from IHS
Not for Resale

33.3.1 All vessels—general

- Class I, Special Division 1 or Class I, Zone 0: See specific vessel types in the following paragraphs of this subclause.
- Class I, Division 1, Group A or Class I, Zone 0, Group IIC: Acetylene bottle storage compartments; open deck areas within 1 m of a natural vent opening, and open areas within 3 m of mechanical exhaust outlets from acetylene bottle storage compartments.
- Class I, Division 1 Group B or Class I, Zone 1, Group IIC or (Group IIB + H2): Reference 8.2.6 of API RP500 or API RP505, as applicable; open deck areas within 1 m of natural vent openings from battery rooms and open areas within 3 m of mechanical exhaust outlets from battery rooms.

NOTE—See 33.7.3 for special wiring requirements for battery rooms. (IIB + H2) is not a "group" per se, but certain electrical equipment is tested for such gases as a convenience to the user and the manufacturer if the equipment must be suitable for hydrogen but not acetylene atmospheres.

- Class I, Division 1 Group C, Group D, or Groups C and D, or Class I, Zone 1, Group IIA, Group IIB, or Groups IIA and IIB: Flammable and combustible paint products storage and usage areas— Reference 8.2.7 of API RP500 or API RP505, as applicable; open deck areas within 1 m of natural/ room vent openings from paint storerooms; and open areas within 3 m of mechanical exhaust outlets from paint storerooms.
- Class I, Division 1 Group D or Class I, Zone 1, Group IIA: Helicopter fuel storage areas—Reference 11.22 of API RP500 or RP505, as applicable.

33.3.1.1 Classification of adjacent areas

For classification of adjacent areas, reference 11.23 of API RP500 or RP505, as applicable.

33.3.2 Tank vessels and barges

This subclause is applicable to tank vessels and barges handling any of the following cargo:

- Cargo with closed cup flashpoint below 60 °C
- Cargo with closed cup flashpoint over 60 °C and with cargo heating arrangements capable of heating the cargo to within 15 °C of its flashpoint
- LPG or LNG
- Carbon disulfide
- Liquid ammonia, except the weather deck is not classified as a hazardous area
- Liquid sulphur
- Inorganic acid

Hazardous areas

a) Class I, Special Division 1 or Class I, Zone 0
   1) Interiors of cargo tanks
   2) Cargo handling rooms and pump rooms
b) Class I Division 1 or Class I, Zone 1
   1) Weather locations
      i) Within 3 m of cargo tank vent outlets, cargo tank ullage openings, cargo pipe flanges, cargo valves, cargo handling room entrances, and cargo handling room ventilation openings
      ii) Within 5 m of cargo pressure/vacuum valves
      iii) Areas within 10 m of vent outlets for the free flow of cargo vapor mixtures and high velocity vent outlets for the passage of large quantities of vapor and air or inert gas mixtures during ballasting and cargo loading and discharging

Copyright © 2002 IEEE. All rights reserved.

Copyright The Institute of Electrical and Electronics Engineers, Inc.
Provided by IHS under license with IEEE
No reproduction or networking permitted without license from IHS
Not for Resale

2) Enclosed spaces
   i) Cargo hose storage spaces
   ii) Enclosed space containing cargo piping
   iii) Semi-enclosed (Reference 11.2.1.2 API RP500 or RP505, as applicable) or enclosed space immediately above, below, or adjacent to a cargo tank
   iv) A pump room that is continuously ventilated at a minimum of 20 air changes per hour with an audible and visual alarm in a manned space to warn of ventilation failure and a combustible gas detection system installed in accordance with API RP 500-1997 or RP505, as applicable, and with audible and visual alarms located in a manned space that are activated if gas is detected at the levels prescribed by API RP500 or RP505, as applicable.

c) Class I, Division 2 or Class I, Zone 2
   1) Open decks over cargo areas and 3 m forward and aft of the cargo area on the open deck and from deck level to an elevation of 3 m above the deck that is not specifically identified elsewhere within this subclause as a Class I, Division 1 hazardous area

33.3.2.1 Vehicle carriers and roll-on/roll-off vessels

a) Class I, Special Division 1, or Class I, Zone 0
   1) No specified areas
b) Class I, Division 1, or Class I, Zone 1
   1) Areas within 0.5 m above vehicle decks
c) Class I, Division 2, or Class I, Zone 2
   1) Enclosed and semi-enclosed vehicle decks above 0.5 m from the deck
   2) Open vehicle deck above 0.5 m and below 1 m from the deck

33.3.2.2 Mobile offshore drilling units (MODUs)

MODUs are to be classified in accordance with API RP500 when the Division system is used and API RP505 when the Zone system is used.

33.3.2.3 Coal carriers

NOTE—The NEC does not address Zone classification for combustible dusts.

Vessels carrying coal present a unique hazardous situation. Both a coal dust hazard and a methane gas hazard can exist simultaneously. Equipment suitable for use in a combustible dust atmosphere does not typically provide the protection needed in a flammable gas atmosphere, and equipment suitable for use in a flammable gas atmosphere does not typically provide the protection needed in a combustible dust atmosphere. Equipment selection is further complicated by the need for equipment that can withstand compartment hose-down to reduce dust accumulation.

From a coal dust aspect, the following areas are Class II, Division 1 locations: the interior of each coal bin and cargo hold, each compartment that has a coal transfer point (where coal is dropped or dumped), and each open area within 3 m of a coal transfer point. A space that has a coal conveyor is a Class II, Division 1 location on a vessel that carries anthracite coal, and a Class I, Division 2 location on a vessel that carries bituminous coal.

When carrying coal that is known to, or that may emit methane gas, the following shall be fitted:

a) A ventilation system shall be provided to holds and adjacent spaces such that ventilation is carried out at a rate of 33 L/min times the maximum weight of coal, in tons, that the ship may carry.
b) All electrical fittings in cargo holds and adjacent spaces shall comply with the requirements of either Class I, Division 1, Group D, or Class I, Division 2, Group D, as applicable, and Class II, Division 1,

Copyright © 2002 IEEE. All rights reserved.
Copyright The Institute of Electrical and Electronics Engineers, Inc.
Provided by IHS under license with IEEE
No reproduction or networking permitted without license from IHS
Not for Resale

or Division 2, as applicable. If the electrical equipment is of the Class I, Division 2 type, an interlocking system shall be installed such that the failure of the ventilation system shall remove power from all Division 2 electrical equipment in the holds or adjacent spaces affected by the ventilation loss.

Class I electrical equipment may generate temperatures in excess of those permitted for Class II (Dust) locations if they become blanketed with coal dust. Therefore, care must be taken to ensure that the installed Class I electrical equipment that can generate heat is also certified for operation in a Class II location.

From a methane aspect, the locations identified in the previous paragraphs are considered Class I, Division 1, Group D locations. Electrical equipment installed in these locations should be suitable for the simultaneous presence of combustible dusts and flammable gases and vapors. Explosionproof equipment that is not watertight should be provided with approved drains.

33.3.2.4 Dry bulk carriers other than coal carriers

Vessels carrying bulk agricultural products that may produce combustible dust hazards are classified as follows:

a) Class II, Division 1 hazardous locations
   1) Interiors of cargo holds and bins
   2) Interiors of spaces where cargo is transferred, dropped, or dumped
   3) Locations within 1 m of the outer edge of the locations described by 2)
b) Class II, Division 2 hazardous locations
   1) Areas within 2 m of a Class II, Division 1 location, except where there is an intervening dust tight barrier, such as a bulkhead or deck

33.4 Hazardous location equipment

33.4.1 General

Although NEC/CEC and IEC requirements are similar in certain aspects, the differences are significant enough to not permit interchangeability of components in many instances. The appropriate authority having jurisdiction, classification society, and qualified individuals who are familiar with the two different systems should be consulted to determine the acceptability of any hazardous location electrical equipment or system.

All electrical equipment in hazardous locations should comply with the requirements of either (1) API RP14F or (2) API RP14FZ. Certain exceptions and supplemental information is included in this subclause. For situations not addressed by either API RP14F or API RP14FZ, or by this subclause, the National Electrical Code shall be followed as required by API RP14F. Marine shipboard cable that complies with IEEE Std 1580-2001 may be used in any area instead of the wiring methods specified in API RP14F-1999 or API RP 14FZ-2001 if installed fittings are approved for the specific hazardous location and cable type. Cables used in Zone 1 or Division 1 locations must be armored. Unarmored cables may be used in Zone 2 or Division 2 or unclassified locations.

The following protection techniques are suitable for electrical equipment installed in Class I hazardous locations:

a) For Divisions
   1) Explosionproof apparatus
   2) Purged and pressurized equipment
   3) Intrinsically safe systems
   4) Nonincendive circuits and equipment

Copyright © 2002 IEEE. All rights reserved.

Copyright The Institute of Electrical and Electronics Engineers, Inc.
Provided by IHS under license with IEEE
No reproduction or networking permitted without license from IHS
Not for Resale

5) Oil immersion
6) Hermetically sealed devices

b) For Zones
1) Flameproof, “d”
2) Purged and pressurized
3) Intrinsic safety, ia and ib
4) Type of protection, “n”
5) Oil immersion “o”
6) Increased safety, “e”
7) Encapsulation, “m”
8) Powder filling, “q”

For additional information on protection techniques, see Section 4 of API RP14F or API RP14FZ, as applicable.

33.5 Hazardous location equipment markings

33.5.1 Hazardous equipment markings for divisions

Hazardous location equipment designations for divisions equipment shall be marked to show the class, group, and operating temperature of temperature range referenced to the appropriate ambient temperature.

33.5.2 Hazardous location equipment markings for zones

As per API RP14FZ, equipment for use in locations classified by the Zone classification system should be marked in accordance with either item a) or item b) as follows:

a) Division Equipment. Equipment approved for Class I, Division 1 or Class I, Division 2 locations shall be marked to show the class, group and operating temperature or temperature range (see “temperature identification number”) referenced to a 40 °C ambient as follows:
1) Class I, Division 1 or Class I, Division 2, as applicable
2) Applicable gas classification group(s)
3) Temperature classification

NOTES

1—The “Division 1” marking is allowed in Zone 1 or Zone 2 locations, but not required. Such equipment may also be marked as Class I, Zone 1 or Class I, Zone 2 (as applicable).

2—Equipment suitable for ambient temperatures exceeding 40 °C shall additionally be marked with the maximum ambient temperature.

It is recommended that the end user specify that the marking on dual-marked equipment used in Zone 1 or Zone 2 classified locations contain the information required by the following:

b) Zone Equipment. Equipment approved for Class I, Zone 0, 1, or 2 locations should be marked as follows:
1) Class
2) Zone
3) Symbol “AEx”
4) Protection technique(s)
5) Applicable gas classification group(s)
6) Temperature classification

Copyright © 2002 IEEE. All rights reserved.
Copyright The Institute of Electrical and Electronics Engineers, Inc.
Provided by IHS under license with IEEE
No reproduction or networking permitted without license from IHS Not for Resale

NOTES

1—Intrinsically safe associated apparatus is required to be marked only with 3), 4) (*Type* [i_a] or [i_b])*, and 5) of item b) of this subclause (33.5.2).
*Italicized words added for clarification.

2—Equipment designed for use in a range of ambient temperatures other than −20 °C and +40 °C is considered to be special, and the ambient temperature range shall additionally be marked on the equipment, including the symbol "T_a" or "T_{amb}".

An example of such a required marking is "Class I, Zone 0 AEx ia IIC T6."

Electrical equipment of types of protection "e," "m," "p," or "q" shall be marked Group II. Electrical equipment of types of protection "d," "ia," "ib," [ia], or [ib] shall be marked Group IIA, or IIB, or IIC, or for a specific gas or vapor. Electrical equipment of types of protection "n" shall be marked Group II unless it contains enclosed-break devices, nonincendive components, or energy-limited equipment or circuits; in which case, it shall be marked Group IIA, IIB, or IIC, or a specific gas or vapor. Electrical equipment of other types of protection shall be marked Group II unless the type of protection utilized by the equipment requires that it shall be marked Group IIA, IIB, or IIC, or a specific gas or vapor.

An explanation of marking required follows:

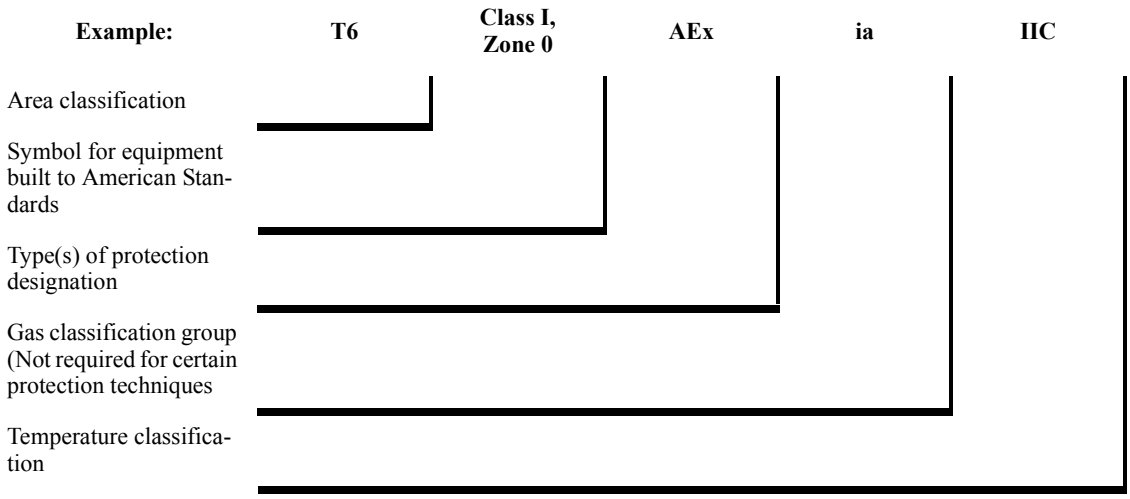

The symbol AEx signifies that the equipment was tested to the appropriate American National (ANSI) Standard. Most appropriate ANSI standards include the ISA S12 series of standards shown in Clause 2 and are "normalized" IEC 60079 series standards.[27] "Normalized" indicates that certain national deviations are taken. For example, equipment can satisfy IEC requirements without being tested for fire and shock hazards as is required in the United States for ordinary location equipment; such tests are required for equipment with the AEx listing. Equipment marked Ex has been certified to meet the appropriate IEC or other national requirements. Equipment marked EEx has been certified to meet the appropriate CENELEC (European Community) requirements.

33.6 Approved equipment

Electrical equipment in hazardous locations should be of a type suitable for such locations (Class, Division, or Zone and Group) and be type tested and certified or listed to a specific American national product

[27]The IEC 60079 series of standards have been normalized by ANSI standards ISA S12 series and UL 2279, shown in Clause 2. "Normalized" indicates that certain national deviations have been taken.

Copyright © 2002 IEEE. All rights reserved.

Copyright The Institute of Electrical and Electronics Engineers, Inc.
Provided by IHS under license with IEEE
No reproduction or networking permitted without license from IHS
Not for Resale

standard by an independent testing laboratory acceptable to the regulatory authority (authority having jurisdiction).

33.7 Wiring methods—hazardous locations

It is recommended that wiring methods for hazardous locations follow the practices recommended for Divisions and Zones in API RP14F and API RP14FZ, respectively. The following practices should also be followed.

33.7.1 Ventilation fans

Fans used for ventilating hazardous locations should be the nonsparking type.

33.7.2 Belt drives

It is recommended that belt drives in hazardous locations have a conductive belt and have pulleys, shafts, and driving equipment grounded in accordance with NFPA 77-2000.

33.7.3 Battery installations

The interior of adequately ventilated (see 22.7) rooms containing batteries that are connected to a battery charger that has an output capacity of more than 2 kW (computed from the highest possible charging current and the rated voltage of the battery installation) shall be meet the requirements of Class I, Division 2, Group B or Class I, Zone 2, Group IIC or "Group" (IIB + H2),[28] as applicable, but with the additional requirement that all wiring and equipment except the batteries, the jumpers connecting their cells, and the positive and negative battery cable leads shall be suitable for Class I, Division 1, Group B or Class I, Zone 1, Group IIC or "Group" (IIB + H2), as applicable, depending on whether the Division or Zone area classification system is used.

33.7.4 Paint storage or mixing spaces

A space for the storage or mixing of paint should follow wiring practices recommended for Class I, Division 1, Group C, Group D, or Groups C and D locations, as appropriate for the materials being stored or mixed, or Class I, Zone 1, Group IIA, Group IIB, or Groups IIA and IIB locations as appropriate for the materials being stored, as applicable, depending on whether the Division or Zone area classification system is used.

33.7.5 Vessels specially designed for vehicles

Electrical equipment in the vehicle space that is above the Division 2 location (see 33.3.2.1) should be totally enclosed or dripproof and protected by guards or screens to prevent the escape of sparks or metal particles under fault conditions.

33.7.6 Electrical installations on tank vessels

33.7.6.1 Distribution systems

Electrical distribution systems of less than 1000 V (line-to-line) should be ungrounded. Grounded distribution systems greater than 1000 V and localized systems under 1000 V (such as for engine starting) may be used where current resulting from a fault condition would not flow through the cargo tank or other hazardous location.

[28](IIB + H2) is not a "group" per se, but certain electrical equipment is tested for such gases as a convenience to the user and the manufacturer if the equipment must be suitable for hydrogen but not acetylene atmospheres.

Copyright © 2002 IEEE. All rights reserved.
Copyright The Institute of Electrical and Electronics Engineers, Inc.
Provided by IHS under license with IEEE
No reproduction or networking permitted without license from IHS
Not for Resale

33.7.6.2 Electrical installations on tank vessels carrying combustible liquid cargo with a closed cup flashpoint of 60 °C or higher

On vessels that carry combustible liquid cargo, all electrical equipment in cargo tanks should be intrinsically safe (Type "ia" for locations classified using the zone method).

33.7.6.3 Electrical installations on tank vessels carrying flammable or combustible liquid cargo with a closed cup flashpoint below 60 °C (including bulk liquefied gas carriers), ammonia, liquid sulfur carriers, and inorganic acid carriers

All electrical equipment in cargo tanks except submerged cargo pumps and their associated cables should be intrinsically safe (Type "ia" for locations classified using the zone method).

Loss of overpressure should cause an alarm at a normally attended location.

33.7.6.4 Electrical installations on vessels carrying carbon disulfide

Electrical installations on vessels carrying carbon disulfide must have only suitable intrinsically safe electrical equipment in Class I, Division 1 locations. For Class I, Zone 0 locations, Type "Ia" equipment must be used. For Class I, Zone 1 locations, Type "Ia" or "Ib" equipment must be used.

33.7.7 Submerged cargo pumps

Submerged cargo pumps should have a low liquid level, motor current, or pump discharge pressure shut-off that automatically removes power to the motor if the pump loses suction. An audible and visual alarm should be actuated at the cargo control station by the shut-off of the motor. There should be a lockable circuit breaker or switch that disconnects power to the motor.

33.7.8 Lighting for cargo handling rooms

Where practical, lighting for cargo handling rooms should be through a suitable wire-inserted fixed glass lenses in the bulkhead or overhead from a nonhazardous location. Fixed lenses should be constructed as to maintain the gastight and watertight integrity of the structure. The fixture should be designed so venting and relamping is performed from the nonhazardous location. The temperature of the lens should not exceed 180 °C in a 40 °C ambient. Where through-bulkhead lighting is impractical, compromises the fire rating of the bulkhead, or cannot provide adequate illumination, explosionproof lighting fixtures should be provided.

33.7.9 Branch circuits for hazardous spaces

At least two lighting branch circuits should be provided for hazardous spaces so that one may be deenergized for relamping. Lighting for enclosed hazardous spaces should be switched using double pole switches located outside of the space.

33.7.10 Ungrounded distribution systems

Ungrounded distribution systems, except intrinsically safe circuits, feeding or passing through a hazardous location should have a device capable of continuously monitoring the insulation level to ground and giving an audible alarm at a normally attended location when the current exceeds 30 mA.

Copyright © 2002 IEEE. All rights reserved.

Copyright The Institute of Electrical and Electronics Engineers, Inc.
Provided by IHS under license with IEEE
No reproduction or networking permitted without license from IHS
Not for Resale

33.8 Additional recommendations for tank vessels carrying bulk liquefied gas or ammonia

Equipment in a hold space of an ammonia carrier that has a cargo tank that is not required to have a secondary barrier should meet the recommendations for a space adjacent to a cargo tank, except that explosionproof lighting is also permitted. Electrical equipment in a space separated by a gastight steel barrier from a hold space having a tank that must have a secondary boundary should meet the requirements for a space adjacent to a cargo tank, except that explosionproof lighting, explosionproof motors operating cargo and ballast valves, and explosionproof general alarm signals are also permitted.

33.8.1 Vessels carrying coal

Vessels carrying coal present a unique hazardous location problem. Both a coal dust hazard (Class II) and a methane gas hazard (Class I) can exist simultaneously. Equipment suitable for use in a combustible dust atmosphere does not typically provide the protection needed in a flammable gas atmosphere, and equipment for use in a flammable gas atmosphere does not typically provide the protection needed in a combustible dust atmosphere. Equipment selection is further complicated by the need for equipment that can withstand compartment hose-down to reduce dust accumulation.

When carrying coal that is known to, or that may, emit methane gas, the following safety features are recommended:

a) A ventilation system shall be provided to holds and adjacent spaces such that ventilation is provided at a minimum rate of 33 L/min times the maximum weight of coal, in tons, that the ship may carry.
b) All electrical equipment in cargo holds and adjacent spaces shall comply with the requirements of either Class I, Division 1, Group D, or Class I, Division 2, Group D, as applicable, and Class II, Division 1, or Division 2, as applicable. If the electrical equipment is not suitable for Class I, Division 1, an interlocking system shall be installed such that the failure of the ventilation system shall remove power from all Division 2 electrical equipment in the holds or adjacent spaces affected by the ventilation loss.

Class I electrical equipment may generate temperatures in excess of those permitted for Class II (dust) locations if they become blanketed with coal dust. Therefore, care must be taken to ensure that any installed electrical equipment, particularly equipment that can generate heat, be suitable for the simultaneous presence of combustible dusts and flammable gases and vapors. Equipment that is not watertight should be provided with suitable drains.

34. Ship tests

34.1 General

After the electric installation is complete and before the vessel proceeds on sea trials, the entire electric plant should be thoroughly inspected and tested. Tests are intended to determine general equipment condition and to ensure that the installation of electrical systems and equipment is in a satisfactory and acceptable state at the time of completion. These tests should be in addition to, and not as a substitute for, the tests of individual equipment items at the manufacturer's facility. Satisfactory test results, although providing worthwhile information on general equipment condition, do not always ensure that any particular installation is satisfactory in all respects.

The initial inspection, which may consist of a series of inspections during the construction of the vessel, should include a complete inspection of the electrical installation and electrical equipment. The inspection should ensure that the electrical arrangement, materials, and installations fully comply with each applicable

Copyright © 2002 IEEE. All rights reserved.
Copyright The Institute of Electrical and Electronics Engineers, Inc.
Provided by IHS under license with IEEE
No reproduction or networking permitted without license from IHS
Not for Resale

recommendation. The inspection should also ensure that the quality of all equipment and installations is satisfactory.

Electric cable should be checked during installation to ensure it is the size and type shown on the plans. The adequacy of cable supports should be checked. It should be ascertained that no cable is installed in the proximity of steam pipes or other hot objects and that cables have not been damaged during the installation from the excessive pulling force, overbending, or sharp or rough edges. Cable penetrations required to be watertight should be checked for proper packing of the penetrator, terminal, or stuffing tube.

Rotating electrical machinery should be checked to ensure that rotating and uninsulated parts are adequately guarded from accidental contact by personnel.

Electrical equipment should be inspected to ensure that it is accessible for normal inspection and routine maintenance. Inspection should ensure that there is provision for accessing junction boxes behind paneling, and that the access is conspicuously identified. Hinged doors of electrical enclosures should be checked to ensure that they are free of interferences from adjacent structure or equipment.

Metal enclosures for electrical equipment should be inspected to ensure they are grounded, either by the method of mounting or by a separate grounding conductor. Portable equipment should be checked to ensure proper grounding through a conductor of the supply cable. Portable equipment such as power tools, that are identified as “double insulated,” need not have a grounding connector in the attachment cord. Refer to 5.9.6 for equipment grounding methods.

Cable insulation resistance should be measured by self-contained instruments, such as the direct indicating ohmmeter of the generator type, applying a dc potential of 500 V. Where the normal operating voltage is less than 100 V, a direct reading ohmmeter of the appropriate voltage should be used. Where operating voltage is greater than 500 V, the test instrument should apply a dc potential approximately equal to the operating voltage. Where circuits contain solid-state devices, care should be exercised to ensure that the devices that have a voltage rating less than the test voltage are disconnected or shorted-out before the test voltage is applied.

Insulation resistance testing of rotating machinery should be performed in accordance with the recommendations in IEEE Std 43-2000, including the corrections for temperature and humidity. The results obtained from the tests depend not only on the characteristics of the insulation materials and the way they are applied, but also on the test conditions. The test values obtained should appropriately adjusted for the test conditions at time of test. The polarization index (ratio of 10-min to 1-min insulation resistance value) for the machine windings should be determined. The recommended minimum value of polarization index for ac and dc machines is 2.0. The resistance should be measured with all circuits of equal voltage above ground connected together. Circuits or groups of circuits of different voltages should be tested separately. This test should be made at a dc voltage of 500 V for a minimum 1 min. The recommended minimum insulation resistance Rm for ac and dc armature windings and for field windings of ac and dc machines can be determined as follows in Equation (5):

$$Rm = \text{kV} + 1 \tag{5}$$

where

Rm is the recommended minimum insulation resistance in MΩ at 40 °C of the entire machine winding

kV is the rated machine terminal to terminal potential, in rms kilovolts

The actual winding insulation resistance to be used for comparison with the recommended minimum value Rm is the observed insulation resistance, corrected to 40 °C,[29] obtained by applying direct potential to the entire winding for 1 min to obtain the initial value and for 10 min to obtain the value for the polarization

[29](104°F)

Copyright © 2002 IEEE. All rights reserved.

Copyright The Institute of Electrical and Electronics Engineers, Inc.
Provided by IHS under license with IEEE
No reproduction or networking permitted without license from IHS
Not for Resale

index. The minimum insulation resistance of the field windings of machines separately excited, with voltage less than the rated voltage of the machine, should be not less than one MΩ.

34.2 New installations

34.2.1 Circuits

Each power and lighting circuit should be tested for insulation resistance between all insulated poles and ground and, where practicable, between poles. Each power and lighting circuit should have an insulation resistance between conductors and ground of not less than the following:

— Up to 5-A load: 2 MΩ
— Up to 10-A load: 1 MΩ
— Up to 25-A load: 400,000 Ω
— Up to 50-A load: 250,000 Ω
— Over 50-A load: 100,000 Ω

If necessary to obtain the desired resistance, appliances may be disconnected from the circuit.

Each interior communication circuit of 115 V and above should have an insulation resistance between conductors and between each conductor and ground of not less than 1 MΩ. For circuits below 115 V, the insulation resistance should be at least 1/3 MΩ. If necessary to obtain the desired resistance, appliances may be disconnected from the circuit.

34.3 Generating sets

The commutation, electrical characteristics, overspeed trips, governing, range of excitation control, lubrication, and absence of vibration should be satisfactorily demonstrated. Tests should be made to demonstrate compliance with 7.3. Each generating set should be run at full rated (kW) load until constant temperature has been reached and in no case for less than 4 h. If generating sets are intended to operate in parallel, they should be tested in all combinations over a range of loading sufficient to demonstrate that load sharing and parallel operation are satisfactory. Voltage and speed regulation, when load is suddenly applied and removed, should comply with 7.3. The insulation resistance of all generators should be measured both in the cold condition and in the hot condition immediately before and after running at normal full load. Automatic, local, and remote starting and stopping systems should be tested.

34.4 Switchboards

Before switchboards, motor control centers, and distribution panels are put into service, they should be tested to ensure the insulation resistance is not less than 1 MΩ when measured between each bus-bar and ground and between each bus-bar. This test shall be made with all circuit breakers and switches open; all fuses for pilot lamps, ground indicating lamps, voltmeters, and so on removed; and all voltage coils disconnected. All switches, circuit breakers, and associated equipment should be operated to demonstrate suitability and compliance with recommendations in Clause 8 (except for short-circuit withstand, circuit-breaker-interrupting rating, and instantaneous trip settings).

All switchboards should be fully loaded (or as close as practicable), and no overheating should occur.

Reverse power relays, reverse current and overcurrent relays, preferential tripping relays, and all electrical and electromechanical interlocks should be satisfactorily operated. Generator, bus tie, and main propulsion feeder circuit breakers should be test-tripped to ensure that adjustable settings comply with the system design values.

Copyright © 2002 IEEE. All rights reserved.
Copyright The Institute of Electrical and Electronics Engineers, Inc.
Provided by IHS under license with IEEE
No reproduction or networking permitted without license from IHS
Not for Resale

Switchboards should be checked for handrails, guardrails, insulating floor covering, drip covers, and backs and sides on the enclosure. Adequate working space around the switchboard should be verified. Switchboard-mounted apparatus should be checked for identifying nameplates. Circuit nameplates should be compared with the rating or setting of the overcurrent devices and with the plans. The accessibility of items requiring maintenance or adjustment should be checked. Meters should be checked for proper operation. The operation of automatic paralleling devices and mechanical and electrical interlocks should be observed.

34.5 Motors and controllers

Each motor and all associated control equipment should be run under operating conditions for a sufficient length of time to demonstrate correct alignment, wiring, capacity, speed, and satisfactory operation. Motor driving pumps, ventilation fans, and similar loads should be operated as nearly as practicable under their individual service conditions. Motor driving cargo winches should hoist and lower their specified loads. Motors for which it is difficult to obtain actual operating loads, such as motor driving warping capstans, machine tools, and other similar load characteristics, should be able to run to demonstrate suitability.

Motor controllers should be checked to ensure proper starting of the motor under service conditions and that properly rated overcurrent devices are installed. Each motor starter not completely disconnected from all sources of potential when the disconnect switch is opened (due to electrically interlocked circuits necessary for proper operation of the apparatus or for other valid reasons) should be checked to ensure that attention is directed to such conditions by a suitable warning label.

The remote control units for stopping ventilation fans, oil pumps, and pumps discharging overboard in way of survival craft should be satisfactorily operated.

34.5.1 Insulation tests

Insulation tests should be made in accordance with the recommendations in IEEE Std 43-1974 or IEC 60034, with the machine windings in a clean, dry condition. The results obtained from the tests depend not only on the characteristics of the insulation materials and the way they are applied, but also on the test conditions. It is recommended that the data recorded during the tests include ambient conditions, particularly those concerning the ambient temperature and the degree of humidity at the time of the test.

The polarization index (ratio of 10-min to 1-min insulation resistance value) for the machine windings should be evaluated. The recommended polarization index minimum value for ac and dc rotating machines is 2.0.

34.5.2 Insulation resistance

The resistance should be measured with all circuits of equal voltage above ground connected together; circuits or groups of circuits of different voltages above ground should be tested separately. This test should be made at a dc voltage of 500 V for a minimum of 1 min. The recommended minimum insulation resistance Rm for ac and dc machine armature windings and for field windings of ac and dc machines can be determined as follows in Equation (6):

$$Rm = \text{kV} + 1 \tag{6}$$

where

Rm is the recommended minimum insulation resistance in MΩ at 40 °C of the entire machine winding[30]

kV is the rated machine terminal to terminal potential, in rms kilovolts

[30](104 °F)

Copyright © 2002 IEEE. All rights reserved.

Copyright The Institute of Electrical and Electronics Engineers, Inc.
Provided by IHS under license with IEEE
No reproduction or networking permitted without license from IHS
Not for Resale

The actual winding insulation resistance to be used for comparison with the recommended minimum value Rm is the observed insulation resistance, corrected to 40 °C, obtained by applying direct potential to the entire winding for 1 min to obtain the initial value and for 10 min to obtain the value for the polarization index.

The minimum insulation resistance of the field windings of machines separately excited, with voltage less than the rated voltage of the machine, should be not less than 1 MΩ.

34.5.3 Tests

Prior to delivery, tests should be performed to ensure that the machine is in accordance with these recommendations and operates at its specified rating. When a machine is a duplicate of one already tested, only such check tests as described in need may be made as necessary to demonstrate that the machine operates successfully. Spare parts should be given a insulation resistance test prior to installation. Tests should be conducted in accordance with the following:

- For single-phase motors: ANSI/NEMA MG-1-1998 or IEC 60034
- For polyphase induction motors: ANSI/NEMA MG-1-1998, IEEE Std 112-1996, IEEE Std 841-2001, API Std 541, or IEC 60034
- For synchronous motors: IEEE Std 115-1995 or IEC 60034
- For dc motors: ANSI/NEMA MG-1-1998 or IEC 60034

34.6 Lighting

Circuits should be tested to ensure that all lighting fixtures, receptacles, and other connected fittings are in satisfactory operating condition. A photometric survey should be conducted to ensure that illumination levels are satisfactory and meet the specified requirements.

34.7 Communication systems

Each interior communications system and alarm system should be tested to verify that they perform their required function. Particular attention should be paid to testing all essential electrical communication systems, including electric engine order telegraphs, electric docking telegraphs, automatic fire alarm and detection systems, general announcing and public address systems, the general emergency alarm system, sound-powered telephone systems, and dial telephone systems.

34.8 Steering system

The operation of electric and electrohydraulic steering gear and associated steering controls should be functionally tested to demonstrate that the requirements of Clause 32 are met.

34.9 Control systems

All propulsion, auxiliary machinery, and electric plant control and safety systems installed to comply with the requirements for an automated machinery system or a periodically unattended machinery space should be checked for correct installation and material condition and be performance-tested to verify satisfactory operation.

Copyright © 2002 IEEE. All rights reserved.
Copyright The Institute of Electrical and Electronics Engineers, Inc.
Provided by IHS under license with IEEE
No reproduction or networking permitted without license from IHS
Not for Resale

34.10 Emergency electrical systems

The complete emergency electrical supply and distribution system should be tested to verify proper performance. This should include the following tests (where applicable):

- Operation of the emergency generator automatic starting system
- Operation of the transitional emergency battery automatic transfer system
- Capacity test of the emergency storage battery
- Operation of the emergency lighting system
- Operation of emergency power driven equipment

34.11 Storage batteries

Storage batteries used for ship service diesel generator set starting and main propulsion diesel engine starting should be checked for capacity. The batteries should have sufficient capacity (without recourse to charging) to provide not less than 12 consecutive starts of each main engine, if of the reversible type, and not less than 6 consecutive starts if of the nonreversible type. For ship service diesel generator sets, battery capacity should provide not less than 6 consecutive starts.

Emergency diesel generator set batteries should be checked to ensure that they have sufficient capacity to provide 3 consecutive starts from each energy source within 30 min.

34.12 Electric heating systems

Electric heating and reheat systems should be checked for proper functioning. Overheat cut-outs should be checked for proper operation and temperature rating. Electrical connections should be checked to ensure that they are tight. The interior of reheat boxes should be checked to ensure that they are free from excessive amounts of combustible dust.

34.13 Voltage drop

One lighting circuit from each distribution panel and switchboard should be selected for voltage drop testing. With all lamps burning and all other permanently connected loads on that circuit operating, the current in the feeder and the voltage at the most remote branch outlet should be measured. The voltage drop in these circuits should meet the recommendations of 5.5. If the voltage drop on this sample circuit does not meet the recommendations, all lighting circuits should be tested, and corrective action taken.

For power circuits, the voltage drop in branch circuits fed from distribution panels should be measured. Equipment should be loaded to approximately full rating, and voltage drop should be determined by measuring the current in the circuit and the voltage at the device's terminals. For auxiliaries fed from switchboards, the voltage drop and feeder current should be measured at the maximum load imposed during scheduled dockside tests. Voltage measurement should be made at the motor output terminals of the motor controller.

The voltage at the generator switchboard should be maintained at rated value. Voltage drop should not exceed the recommended values.

34.14 Existing installations

Electric equipment and systems should be continually maintained to ensure that the installation is kept as close as practicable to the original physical condition. Insulation maintenance for rotating electrical machin-

Copyright © 2002 IEEE. All rights reserved.

Copyright The Institute of Electrical and Electronics Engineers, Inc.
Provided by IHS under license with IEEE
No reproduction or networking permitted without license from IHS
Not for Resale

ery should be conducted in accordance with IEEE Std 432-1992. Electrical equipment and systems should be periodically inspected and tested for the purpose of observing the possible development of physical changes or deterioration. These inspections and tests, at the intervals required by classification societies or national authorities, should include the following items:

a) The equipment and installation should be generally inspected and tested under working conditions and electric cables inspected as far as practicable without dismantling equipment.
b) Generators and all motors driving essential auxiliary machinery should be inspected as far as may be practicable without dismantling equipment, unless such dismantling is deemed necessary as a result of test or observation.
c) An insulation resistance test should be made on generators, motors, cables, heaters, and fittings using a direct indicating ohmmeter of the generator type, applying a dc voltage of 500 V; the insulation resistance measured should not be less than the values given in 34.1.
d) All generators should be run individually or simultaneously, and all main switches and circuit breakers operated under load and their reverse power, overcurrent, undervoltage, and underfrequency trip circuits tested.
e) The functioning of the complete emergency electrical supply system should be tested. This should include the following:
    1) Operation of the emergency generator automatic starting system
    2) Operation of the transitional emergency battery automatic transfer system
    3) Where the emergency source of power is supplied by batteries, operation under the specified load conditions
    4) Operation of the emergency lighting system
f) All essential electrical communication systems should be tested to verify proper operation.
g) Where the control of the propulsion machinery or the propeller is provided by electric or electronic means, a general inspection of the complete control system should be conducted.
h) The operation of electric and electrohydraulic steering gear should be tested. Particular attention should be paid to the functioning of the motor overload alarm, motor stopped indication, and supply circuit-breaker-tripped alarm.

It is further recommended that in addition to required inspections, periodic measurements of resistance of the insulation be made between conductors and the frame or ground of rotating equipment and in circuits between conductors and between conductors and ground. The value of insulation resistance will afford a useful indication as to whether the equipment or system is in a suitable condition for continued service. This data can be used to detect deterioration conditions and to allow for corrective action prior to equipment or system failure.

The best indication of the magnitude of current leakage from a winding or circuit is given by a comparison of the observed insulation resistance with previously measured values. The change from the last measured value of resistance is far more significant than is the absolute value of the resistance. It is recommended that a log of successive readings be kept for each important machine and circuit on board ship. In addition, remarks should be entered into the log to describe properly the observed condition of the machine and circuit for future comparison. Log entries should typically include the following:

— For machines: Supply cable connected or disconnected; machine blown out, machine dried out, dusty, oily, or wet; condition of connecting leads, brush rigging, brushes, commutator; clearances between pole pieces and armature; temperature; humidity; repairs made.
— For circuits: Equipment and appliances connected or disconnected to the supply cables; cable and connection boxes dirty, oily, or wet; condition of connected equipment and appliances; temperature; humidity; repairs made.

Any large and abrupt decrease in insulation resistance should be investigated immediately. The insulation resistance is subject to variation with temperature, humidity, and cleanliness of parts. When the insulation resistance falls, it can, in most cases when no defect or ground exists, be brought up to a proper value by

Copyright © 2002 IEEE. All rights reserved.
Copyright The Institute of Electrical and Electronics Engineers, Inc.
Provided by IHS under license with IEEE
No reproduction or networking permitted without license from IHS
Not for Resale

cleaning and drying. The insulation resistance of rotating machines can generally be improved by cleaning in accordance with IEEE Std 432-1992. It is difficult to prescribe definite recommendations for the actual value of insulation resistance of a machine or circuit because their values vary with type, size, voltage rating, kind and condition of insulating material used, method of construction, and the insulation record of the machine and circuit. Considerable judgment based on the results of previous measurements should be exercised to determine whether the machine or circuit is suitable for continued service or should be repaired or replaced.

The frequency of periodic inspections and insulation resistance tests is dependent on the magnitude and importance of the electric installation on board the vessel as well as the service and climatic conditions to which such installations are subjected.

The use of logs or records covering these recommendations, which will also show other pertinent information contingent on the vessel's individual service conditions, is recommended.

35. Spare Parts

The vessel owner should consider requirements for spare parts for all critical systems on board the vessel. As part of this consideration are items such as number of like parts in service, importance of the equipment to the safety and seaworthiness of the vessel, delivery time of replacement parts, manufacturers' recommendations, remoteness of operating area of the vessel, and cost. Spare parts provided should be packaged for long term storage in the marine environment and secured to avoid damage to the part or the vessel due to vessel motion.

Copyright © 2002 IEEE. All rights reserved.

Copyright The Institute of Electrical and Electronics Engineers, Inc.
Provided by IHS under license with IEEE
No reproduction or networking permitted without license from IHS
Not for Resale

Annex A

(informative)

General information on hazardous location classification and equipment

This informative annex is intended to provide basic hazardous location information for the standards, techniques, and practices outlined in the standards of the IEC. The IEC approach can also be found in the 1999 edition of the NEC, Article 505. Some comparisons of the traditional requirements of the NEC, as addressed in Articles 500 through 504, and the IEC requirements are offered.

The IEC consists of the National Committees of over 40 participating countries and cooperates in international standardization with organizations like the IS0 and the IEEE. Today, IEC member nations represent more than 80% of the global population and more than 95% of the consumers of the world's electrical energy.

The IEC has developed hazardous location standards that have been adopted in many countries. These standards are largely based on European practice. United States and Canadian standards are similar but have evolved separately based on the requirements of the (U.S.) NEC and the CEC. The IEC's standards for hazardous location equipment and installations represent only one area of their concern in a wide array of electrical issues.

Although NEC/CEC and IEC requirements are similar in certain respects, the differences are significant enough to not permit interchangeability of components in many instances. The appropriate regulatory bodies and classification societies should be consulted to determine the acceptability of any hazardous location electrical equipment or system.

A.1 IEC (and NEC article 505) and NEC (articles 500 to 504)

Both the IEC and the NEC/CEC classification schemes define the hazard that is present and likelihood that the hazard will be present.

The traditional NEC approach uses a system of three classes to define the hazard:

— Class I: Flammable gases
— Class II: Combustible dusts
— Class III: Ignitable fibers or flyings

Reference Clause 33 for details.

The IEC classification uses two main group designations, as follows:

— Group I: Mining
— Group II: Surface industries (including offshore)

Group II contains subgroups A, B, and C. Similar to the NEC, the subgroups represent the different categories of flammable gases and vapors based on their MESG, explosion pressure, and ignition temperature. Representative gases in the three subgroups are as follows:

— Group IIC: Acetylene/hydrogen
— Group IIB: Ethylene
— Group IIA: Propane

Copyright © 2002 IEEE. All rights reserved.
Copyright The Institute of Electrical and Electronics Engineers, Inc.
Provided by IHS under license with IEEE
No reproduction or networking permitted without license from IHS
Not for Resale

To represent the likelihood of the hazard being present, the NEC uses two location classifications based on the hazard probabilities during normal and abnormal operations:

— Division 1: Locations where material can exist under normal operating conditions, or frequently because of repair, maintenance, or leakage.
— Division 2: Locations where material can exist under abnormal conditions (accidental rupture, breakdown, abnormal operations, etc.), or locations adjacent to a Division 1 location where material may occasionally be present.

Although not described in NEC Articles 500 through 504 location classifications, a third "de facto" hazardous location classification has traditionally existed on tank vessels that is comparable to the IEC Zone 0 location. In these locations (e.g., cargo tanks and cargo pump rooms), North American regulatory bodies may have electrical equipment requirements that are more stringent than are those for Division 1 locations.

The IEC uses a three "Zone" method of hazardous location classification for gases and vapors, as follows:

— Zone 0: Explosive gas (vapor)/air mixture is always present or present for extended periods during normal operations. (An example of Zone 0 is the air space in an atmospheric tank containing a flammable liquid.)
— Zone 1: An explosive gas/air mixture is likely to occur in normal operation.
— Zone 2: An explosive gas/air mixture is not likely to occur in normal operation, and if it occurs, it only exists for a short time.

To address the hazards associated with combustible dust, the IEC uses the following designations (see Table A.1):

— Zone 10: An explosive dust atmosphere is present continuously or for extended periods of time.
— Zone 11: An explosive dust atmosphere may exist for a short period of time due to unsettled dust layers.

Table A.1—IEC vs NEC hazardous vapors group comparison

Group comparisons	
IEC	NEC
Group I	Gaseous mines
Group IIA	Class I, Group D
Group IIB	Class I, Group C
Group IIC	Class I, Groups A and B

A.2 Hazardous location equipment

The methods of protection for traditional electrical installations in NEC Division 1 and Division 2 hazardous locations are discussed in Clause 33.

For Zone 1 and Zone 2 locations, the IEC permits flameproof (similar to NEC explosionproof) enclosures, intrinsically safe apparatus (types i_a and i_b—i_a intrinsically safe apparatus, the only electrical equipment permitted in Zone 0 locations) and purged and pressurized enclosures. The IEC also recognizes the following

Copyright © 2002 IEEE. All rights reserved.

Copyright The Institute of Electrical and Electronics Engineers, Inc.
Provided by IHS under license with IEEE
No reproduction or networking permitted without license from IHS
Not for Resale

Zone 1 and Zone 2 protection techniques: increased safety, encapsulation, special protection, sand/powder filling, and oil filling.

A.2.1 Flameproof enclosures

Flameproof equipment is designed and constructed to contain an explosion that occurs within the enclosure. Mated surfaces are fashioned with a flame path (threaded connections or machined surfaces) to ensure that the hot gases escaping the enclosure as a result of an internal explosion are sufficiently "cooled" to prevent ignition of the surrounding atmosphere. The fundamental difference between NEC explosionproof and IEC flameproof equipment is the dimensional differences of flame path and surface gaps The smaller values established for surface gaps in explosionproof enclosures take "pressure piling" (pressure increases in an enclosure due to the ignition of turbulent mixtures and the enclosure being connected to a rigid conduit) into account and are based on slightly different test conditions.

A.2.2 Intrinsic safety (IS) apparatus

By limiting the amount of energy in a given circuit to a value below the minimum energy required to cause the ignition of a specific explosive atmosphere, a circuit is considered to be intrinsically safe. Because of their low power ratings, intrinsically safe circuits are typically limited to instrumentation and control circuits. Two ratings are given to IS circuits, i_a and i_b. The IEC recognizes type i_a for Zone 0, Zone 1, and Zone 2 applications, and i_b for Zone 1 and 2 applications. IS i_a circuits are tested with a two-fault criteria applied. IS i_b circuits are tested with a single-fault criteria applied.

A.2.3 Purged and pressurized systems

Purged and pressurized systems pressurize the atmosphere within an enclosure with a nonhazardous gas, typically air. Purged and pressurized systems are limited to Zone 1 and Zone 2 locations.

A.2.4 Increased safety

By applying additional design factors to normally nonarcing or sparking equipment, such as increased creepage distances between live parts and high-integrity insulating materials, increased safety equipment prevents the ignition of surrounding vapors by preventing hot spots. The IEC permits increased safety equipment in Zone 1 and Zone 2 locations.

A.2.5 Encapsulation

By the encapsulation of small electrical components in resins or similar materials, components are effectively isolated from the surrounding atmosphere. The encapsulated component is then tested under fault conditions that assure that the surface temperature does not rise above its given "T" rating. The IEC permits encapsulation for Zone 1 and Zone 2 applications.

A.2.6 Sand/oil filled

This protection technique is similar to encapsulation type protection. The IEC permits sand/oil-filled components for Zone 1 and Zone 2 applications.

Copyright © 2002 IEEE. All rights reserved.
Copyright The Institute of Electrical and Electronics Engineers, Inc.
Provided by IHS under license with IEEE
No reproduction or networking permitted without license from IHS
Not for Resale

A.2.7 Special protection

Special Protection recognizes certification of approval by a responsible agency after thorough review and testing of apparatus and equipment that does not comply with any of the recognized protection methods. This method of protection is typically applied to Zone 1 equipment.

A.2.8 IEC protection technique designations

IEC equipment designations are as follows in Table A.2

Table A.2—IEC protection technique designation

Letter	Protection technique
d	Flameproof: similar to explosionproof
e	Increased safety
i_a	Intrinsic safety for Zones 0, 1, and 2
i_b	Intrinsic safety for Zones 1 and 2
m	Encapsulation
n	Nonsparking
o	Oil immersion
p	Pressurization
q	Sand filling
s	Special protection

A.3 IEC temperature codes

The equipment temperature code shows the maximum surface temperature of the apparatus, based on a 40 °C ambient. An actual temperature number may be listed in lieu of, or in addition to, one of the following (Table A.3) “T-codes”:

Table A.3—IEC T-Codes

IEC temperature code	Maximum surface temperature (°C)
T1	450
T2	300
T3	200
T4	135

Copyright © 2002 IEEE. All rights reserved.

Copyright The Institute of Electrical and Electronics Engineers, Inc.
Provided by IHS under license with IEEE
No reproduction or networking permitted without license from IHS
Not for Resale

Table A.3—IEC T-Codes *(continued)*

IEC temperature code	Maximum surface temperature (°C)
T5	100
T6	85

Although not a direct part of the hazardous location certification, the ingress protection code is typically provided as part of the equipment hazardous locations marking. This code is useful in determining the equipment's suitability for marine use. Enclosures are certified using the two-digit "ingress protection" (IP) codes defined in IEC Publication 60529. The first number describes the level of protection against solid object entry, and the second number indicates the level of protection against liquid entry. See Annex C, Table C.3.

A.4 IEC hazardous location equipment designations

The IEC equipment designation consists of six parts, as follows:

a) The symbol Ex, the IEC designation for electrical apparatus suitable for use in explosive atmospheres. [The symbol EEx is the old symbol for apparatus certified to meet the CENELEC (harmonized European Community) standards for electrical equipment in hazardous areas. The letters "Ex" in Greek script (epsilon chi) within a hexagon form the new CENELEC symbol.]
b) A lowercase letter (or letters), identifying the protection technique(s) employed to make the apparatus safe for use in hazardous areas. Where multiple protection techniques are used, several letters may appear.
c) A Roman numeral for gas or vapor hazards that shows the intended application of the apparatus:
    1) I: Below ground mining.
    2) II: Above-ground installations. This designation includes shipboard installations
d) For Group II apparatus, an uppercase letter that identifies a gas as representative of the flammability properties of the relevant gas group.
e) The temperature code "T" rating.
f) The ingress protection provided by the equipment.

Example: "Ex d IIC T4 IP56" on a lighting fixture can be interpreted as follows:

— Ex: Certified to meet IEC standards for hazardous areas
— d: Protection by flameproof enclosure, for Zones 1 and 2
— II: Intended for above-ground application
— C: For gas groups represented by hydrogen and acetylene
— T4: Maximum surface temperature limit of 135 °C
— IP56: Protected against dirt, dust, and heavy seas

A.5 IEC reference standards

The following is a list of standards and requirements for IEC hazardous locations equipment and installations (as of 1999):

IEC 144, Degrees of Protection of Enclosures for Low Voltage Switchgear and Control Gear.

Copyright © 2002 IEEE. All rights reserved.
Copyright The Institute of Electrical and Electronics Engineers, Inc.
Provided by IHS under license with IEEE
No reproduction or networking permitted without license from IHS
Not for Resale

IEC 529, Classification of Degrees of Protection Provided by Enclosures (IP Code).

IEC 654-1, Industrial Process Measurement and Control Equipment—Operating Equipment Part 1: Climatic Conditions.

IEC 60079-0, Electrical Apparatus for Explosive Gas Atmospheres Part 0: General Requirements Second Edition; (Amendment 2-1991, Incorporating Amendment 1).

IEC 60079-1, Electrical Apparatus for Explosive Gas Atmospheres Part 1: Construction and Verification Test of Enclosures of Electrical Apparatus Third Edition; (Amendment 1-1993).

IEC 60079-2, Electrical Apparatus for Explosive Gas Atmospheres Part 2: Electrical Apparatus—Type of Protection “p” Third Edition.

IEC 60079-3, Electrical Apparatus for Explosive Gas Atmospheres Part 3: Spark Test Apparatus for Intrinsically-Safe Apparatus Circuits Third Edition.

IEC 60079-4, Electrical Apparatus for Explosive Gas Atmospheres Part 4: Method of Test for Ignition Temperature Second Edition.

IEC 60079-5, Electrical Apparatus for Explosive Gas Atmospheres Part 5: Sand-Filled Apparatus First Edition; (Incorporating Supplement A-1969).

IEC 60079-6, Electrical Apparatus for Explosive Gas Atmospheres Part 6: Oil-Immersed Apparatus First Edition.

IEC 60079-7, Electrical Apparatus for Explosive Gas Atmospheres Part 7: Increased Safety “e” Second Edition; (Amendment 1-1991) (Amendment 2-1993).

IEC 60079-10, Electrical Apparatus for Explosive Gas Atmospheres Part 10: Classification of Hazardous Areas Second Edition.

IEC 60079-11, Electrical Apparatus for Explosive Gas Atmospheres Part 11: Intrinsic Safety “i” Third Edition.

IEC 60079-12, Electrical Apparatus for Explosive Gas Atmospheres Part 12: Classification of Mixtures of Gases or Vapours with Air According to their Maximum Experimental Safe Gaps and Minimum Igniting Currents First Edition.

IEC 60079-13, Electrical Apparatus for Explosive Gas Atmospheres Part 13: Construction and Use of Rooms or Buildings Protected by Pressurization First Edition.

IEC 60079-14, Electrical Apparatus for Explosive Gas Atmospheres Part 14: Electrical Installation in Explosive Gas Atmospheres (Other than Mines) First Edition.

IEC 60079-15, Electrical Apparatus for Explosive Gas Atmospheres Part 15: Electrical Apparatus with Type Protection “n” First Edition.

IEC 60079-16, Electrical Apparatus for Explosive Gas Atmospheres Part 16: Artificial Ventilation for the Protection of Analyzer(s) Houses First Edition.

IEC 60079-17, Electrical Apparatus for Explosive Gas Atmospheres Part 17: Recommendations for Inspection and Maintenance of Electrical Installations in Hazardous Areas (Other Than Mines) First Edition.

Copyright © 2002 IEEE. All rights reserved.

Copyright The Institute of Electrical and Electronics Engineers, Inc.
Provided by IHS under license with IEEE
No reproduction or networking permitted without license from IHS Not for Resale

IEC 60079-18, Electrical Apparatus for Explosive Gas Atmospheres Part 18: Encapsulation “m” First Edition.

IEC 60079-19, Electrical Apparatus for Explosive Gas Atmospheres Part 19: Repair and Overhaul for Apparatus Used in Explosive Atmospheres (Other Than Mines or Explosives) First Edition.

Copyright © 2002 IEEE. All rights reserved.
Copyright The Institute of Electrical and Electronics Engineers, Inc.
Provided by IHS under license with IEEE
No reproduction or networking permitted without license from IHS
Not for Resale

Annex B

(informative)

Circuit designations

All electrical circuits, including those for power, lighting, interior communications, control, and electronics, are typically identified in the appropriate documentation and on equipment labeling, such as nameplates, cable tags, wire markers, and so on, by a traditional system designation. These designations use a designation prefix, as follows in Table B.1:

Table B.1—Traditional system designation prefix

Type	Designation prefix
Ship service power	P
Emergency power	EP
Propulsion power	PP
Shore power	SP
Special frequency power	SFP
Lighting	L
Emergency lighting	EL
Degaussing	D
Cathodic protection	CPS
Interior communication	C
Control	K
Electronics	R

The following list of systems and system designations should be used, and may be modified to suit particular applications as shown in Table B.2:

Table B.2—System designation

System	Designation
Announcing: Docking	C-SMC
Announcing: General	C-IMC
Announcing: Integrated	C-MC
Announcing: Loudhailer	C-6MC
Announcing: Talk back	C-9MC

Copyright © 2002 IEEE. All rights reserved.

Copyright The Institute of Electrical and Electronics Engineers, Inc.
Provided by IHS under license with IEEE
No reproduction or networking permitted without license from IHS
Not for Resale

Table B.2—System designation *(continued)*

System	Designation
Auxiliary machinery remote control	K-AC
Boiler combustion control	K-SX
Boiler water level control	K-BL
Boiler water level alarm	C-1TD
Call bells	C-A
Central alarm and monitoring	C-AM
CO_2 release alarm	C-CO
Cooling water high-temperature alarm	C-EW
Echo depth sounder	R-SS
Electric clocks	C-CE
Electric door control (other than for watertight doors)	C-DE
Electric plant control and monitoring	K-EC
Emergency generator set control and indication	K-EG
Engine order telegraph	C-MB
Feed water low-level alarm	C-2TD
Fire detection and alarm	C-F
Fire door release	C-FR
Flooding alarm	C-FD
Fog alarm	C-FB
Fuel oil filling alarm	C-3TD
Fuel oil tank high-level alarm	C-4TD
General alarm	C-G
Gyro compass	C-LC
Helm angle indicator	C-LH
Hospital and nursing call	C-AN
Integrated navigation	C-IN
Lubricating oil low-level alarm	C-EL
Lubricating oil low-pressure alarm	C-EC
Main generator set local control and indication	K-PG
Propulsion diesel local control and indication	K-PD
Propulsion motor local control and indication	K-PM
Propulsion system remote control	K-PC
Propulsion turbine local control and indication	K-PT

Copyright © 2002 IEEE. All rights reserved.
Copyright The Institute of Electrical and Electronics Engineers, Inc.
Provided by IHS under license with IEEE
No reproduction or networking permitted without license from IHS
Not for Resale

Table B.2—System designation *(continued)*

System	Designation
Pyrometer	C-PB
Radar, navigation	R-RN
Radio antenna	R-RA
Radio direction finder	R-RD
Radio GMDSS	R-GA
Radio receiver	R-RR
Radio receiving antenna distribution	R-RB
Radio receiving entertainment distribution	R-RE
Radio satellite communication	R-RS
Radio transceiver	R-RQ
Radio transmitter	R-RT
Refrigerator alarm cargo	C-RH
Refrigerator alarm ship stores	C-RA
Resistance temperature indication	C-FT
Rudder angle indicator	C-N
Telephone: Automatic dial	C-J
Telephone: Sound-powered (cargo and ballast control)	C-6JV
Telephone: Sound-powered (damage control)	C-JZ
Telephone: Sound-powered (electrical engineers)	C-5JV
Telephone: Sound-powered (fueling engineers)	C-3JV
Telephone: Sound-powered (machinery control engineers)	C-2JV
Telephone: Sound-powered (maintenance engineers)	C-4JV
Telephone: Sound-powered (miscellaneous)	C-7JV
Telephone: Sound-powered (ship control and maneuvering)	C-1JV
Telephone: Sound-powered (call)	C-E
Television: Closed circuit	R-TC
Television: Monitoring	R-TM
Salinity indicator	C-SB
Security alarm	C-FZ
Sewage tank high-level alarm	C-5TD
Shaft revolution indication	C-K
Ship service generator local control and indication	K-SG
Smoke indicator	C-SM

Copyright © 2002 IEEE. All rights reserved.

Copyright The Institute of Electrical and Electronics Engineers, Inc.
Provided by IHS under license with IEEE
No reproduction or networking permitted without license from IHS
Not for Resale

Table B.2—System designation *(continued)*

System	Designation
Sprinkler alarm	C-FS
Steering control	C-L
Steering gear alarm	C-LA
Tank level alarm	C-TD
Tank level indicator	C-TK
Underwater log	C-Y
Watertight door control	C-WD
Wet and dry bulb temperature indication	C-T
Whistle operator	C-W
Wind direction indicator	C-HD
Wind intensity indicator	C-HE

Copyright © 2002 IEEE. All rights reserved.
Copyright The Institute of Electrical and Electronics Engineers, Inc.
Provided by IHS under license with IEEE
No reproduction or networking permitted without license from IHS
Not for Resale

Annex C

(informative)

Enclosures NEMA and IEC characteristics, designations, and comparison

Table C.1—NEMA enclosures

NEMA type no.	Type of enclosure	Characteristics	Intended use	Typical offshore applications
1	General purpose, surface mounting	A general-purpose (NEMA Type 1) enclosure is designed to prevent accidental contact with enclosed electrical apparatus. A NEMA Type 1 enclosure is suitable for general-purpose application indoors where atmospheric conditions are normal. It is not dusttight or watertight.	To prevent accidental contact with live parts, indoors, where normal atmospheric conditions prevail.	Lighting panels, motor control centers, disconnect switches, and so on, in unclassified areas inside buildings.
1-A	Semidustlight	A semi-dusttight enclosure (NEMA Type 1-A) is similar to the Type 1 enclosure, but with the addition of a gasket around the cover. A NEMA Type 1-A enclosure is suitable for general-purpose application indoors and provides additional protection against dust, although it is not dusttight	Same as NEMA Type 1, but in locations where a small amount of dust is prevalent.	Same as NEMA Type 1.
1-B	General purpose, flush mounting	A flush-type enclosure (NEMA Type 1-B) is similar to the Type 1 enclosure, but is designed for mounting in a wall and is provided with a cover that also serves as a flush plate.	Same as NEMA Type 1, but for flush-type mounting applications.	Same as NEMA Type 1 where flush (versus surface) mounting is desired.

Copyright © 2002 IEEE. All rights reserved.

Copyright The Institute of Electrical and Electronics Engineers, Inc.
Provided by IHS under license with IEEE
No reproduction or networking permitted without license from IHS
Not for Resale

Table C.1—NEMA enclosures *(continued)*

NEMA type no.	Type of enclosure	Characteristics	Intended use	Typical offshore applications
2	Driptight	A driptight enclosure (NEMA Type 2), also referred to as "Dripproof", is similar to the Type 1 general purpose enclosure, but with the addition of drip shields or their equivalent. A Type 2 enclosure is suitable for application where condensation may be severe. NOTE—Driptight apparatus may be semi-enclosed apparatus if it is provided with suitable protection integral with the apparatus, or so enclosed as to exclude effectively falling solid or liquid material.	Locations where condensation may be severe.	No typical offshore applications.
3	Weathertight	A weathertight enclosure (NEMA Type 3) is designed for use outdoors to provide protection against weather hazards such as rain and sleet. A NEMA Type 3 enclosure is suitable for application outdoors.	Outdoors where it is necessary to provide protection against weather hazards such as rain and sleet.	Refer to NEMA Type 12 applications.
3R	Weather-resistant	A weather-resistant enclosure (NEMA Type 3R) is designed for use outdoors to provide protection against rain. Rain will not readily interfere with operation of internal components. NEMA Type 3R provide less protection than Type 3.	Same as NEMA Type 3, but in less severe application.	Same as NEMA Type 3.
3S	Weathertight	A weather-tight enclosure (NEMA 3S) is designed for use indoor and outdoor to provide a degree of protection against falling dust, rain, sleet, snow and wind-blown dust and in which the external mechanism remains operable when ice laden.	Same as NEMA 3 except more severe. External mechanisms remain operable when covered with ice.	Same as NEMA Type 3.

Copyright © 2002 IEEE. All rights reserved.
Copyright The Institute of Electrical and Electronics Engineers, Inc.
Provided by IHS under license with IEEE
No reproduction or networking permitted without license from IHS
Not for Resale

Table C.1—NEMA enclosures *(continued)*

NEMA type no.	Type of enclosure	Characteristics	Intended use	Typical offshore applications
4	Watertight	A watertight enclosure (NEMA Type 4) is designed for outdoor use and is required to meet the hose test as follows: NEMA Type 4 Enclosures shall be tested by subjection to a stream of water. A hose with a 1-in. nozzle shall be used and shall deliver at least 65 gallons per minute. The water shall be directed on the enclosure from a distance of not less than 10 feet and for a period of 5 min. During this period it may be directed in one or more directions as desired. There shall be no leakage of water into the enclosure under these conditions.	Outdoor or indoor locations where enclosed equipment might be subjected to splashing or dripping water. Not suitable for submersion in water.	Equipment enclosures and junction boxes subject to wind-driven rain or hose washdown.
4X	Watertight	A watertight corrosion-resistant (NEMA Type 4X) enclosure is similar to the Type 4 enclosure but is manufactured from corrosion-resistant materials, such as glass polyester or stainless steel.	Same as NEMA Type 4, but designed for a more corrosive environment.	Same as NEMA Type 4.
5	Dusttight	A dusttight (NEMA Type 5) enclosure is provided with gaskets and is suitable for application in locations where it is desirable to exclude dirt	In locations where it is necessary to protect the enclosed equipment against injurious accu-mulation of dust or lint	No typical offshore applications.
6, 6P	Submersible	A submersible enclosure is suitable for applications where the equipment may be subject to occasional temporary submersion (NEMA Type 6) and prolonged submersion (NEMA Type 6P) in water. The design of the enclosure will depend upon the specified conditions of pressure and time.	Locations where the equipment is subject to submersion in water.	Junction boxes installed in the splash zone.

Copyright © 2002 IEEE. All rights reserved.

Copyright The Institute of Electrical and Electronics Engineers, Inc.
Provided by IHS under license with IEEE
No reproduction or networking permitted without license from IHS
Not for Resale

Table C.1—NEMA enclosures *(continued)*

NEMA type no.	Type of enclosure	Characteristics	Intended use	Typical offshore applications
7	Explosion proof, Class I	An explosionproof enclosure (NEMA Type 7) is designed to meet the application requirements in Art. 500 of the NEC for Class I locations and is designed in accordance with the latest specifications of Underwriters' Laboratories for particular groups of gases. Certain NEMA 7 enclosures are approved for several groups (such as Groups B, C, and D), while others may be approved only for a particular group (such as Group D). NEMA 7 enclosures are not necessarily suitable for outdoor use.	Locations classified as Class I, Division 1 or 2 hazardous locations.	Widely used in classified areas when arcing or high temperature devices are utilized.
8	Explosion proof, oil-filled, Class I	An explosionproof, oil filled enclosure (NEMA Type 8) is designed to meet the application requirements in Art. 500 of the NEC for Class I locations and is designed in accordance with the latest specifications of Underwriters' Laboratories for specific gases. The apparatus is immersed in oil.	Same as NEMA Type 7.	Not widely utilized offshore, but suitable for same areas as NEMA Type 7.
9	Dust-ignition proof, Class II	A dust-ignition proof enclosure (NEMA Type 9) is designed to meet the application requirements in Art. 500 of the NEC for Class II locations, and is designed in accordance with the latest specifications of Underwriters' Laboratories for particular dusts.	Locations classified as Class II hazardous locations (containing combustible dust).	No typical offshore applications.
10		A NEMA Type 10 enclosure is designed to meet the latest requirements of the Bureau of Mines and is suitable for applications in coal mines.	Locations required to meet the latest requirements of the Bureau of Mines.	No typical offshore applications.
11	Acid and fume resistant, oil immersed	An acid and fume-resistant (NEMA Type 11) enclosure is suitable for applications indoors where the equipment may be subject to corrosive acid or fumes. The apparatus is immersed in oil.	Locations where acid or fumes are present.	No typical offshore applications.

Copyright © 2002 IEEE. All rights reserved.
Copyright The Institute of Electrical and Electronics Engineers, Inc.
Provided by IHS under license with IEEE
No reproduction or networking permitted without license from IHS
Not for Resale

Table C.1—NEMA enclosures *(continued)*

NEMA type no.	Type of enclosure	Characteristics	Intended use	Typical offshore applications
12	Dusttight and driptight	A dusttight and driptight (NEMA Type 12) enclosure is provided with an oil-resistant synthetic gasket between the case and the cover. To avoid loss, any fastener parts are held in place when the door is opened. There are no holes through the enclosures for mounting or for mounting controls within the enclosure and no conduit knockouts or conduit openings. Mounting feet or other suitable means for mounting are provided. A NEMA Type 12 enclosure is suitable for industrial application in locations where oil or coolant might enter the enclosure. NEMA Type 12 enclosures are not suitable for outdoor use, but may be modified to meet Type 3 requirements with the addition of a drip shield. Enclosures carrying a NEMA 3.12 rating area superior to those carrying only a NEMA 3 rating.	Indoor locations where oil or coolant might enter the enclosure.	Indoors in areas protected from the environment, or outdoors when modified, to meet NEMA Type 3 requirements.
13	Oiltight and dust-tight	An oiltight and dusttight (NEMA 13) enclosure is intended for use indoors primarily to house pilot devices such as limit switches, pushbuttons, selector switches pilot, lights, etc., and to protect these devices against lint and dust, seepage, external condensation, and spraying of water, oil or coolant. They have oil-resistant gaskets and, when intended for wall or machine mounting, have mounting means external to the equipment cavity. They have no conduit knockouts or unsealed openings providing access into the equipment cavity. All conduit openings have provision for oiltight conduit entry.	Indoor locations where spraying oil or coolant might enter the enclosure.	Indoors in areas protected from the environment for control panels.

Copyright © 2002 IEEE. All rights reserved.

Copyright The Institute of Electrical and Electronics Engineers, Inc.
Provided by IHS under license with IEEE
No reproduction or networking permitted without license from IHS
Not for Resale

Table C.2—Approximate conversions for IP enclosure types to NEMA types

NEMA type no.	IP first characteristic numeral						IP second characteristic numeral							Max IP designation
	1	2	3	4	5	6	1	2	3	4	5	6	7	
1	X	0	0	0	0	0	0	0	0	0	0	0	0	IP10
2	X	0	0	0	0	0	X	0	0	0	0	0	0	IP11
3	X	X	X	X	X	0	X	X	X	X	0	0	0	IP54
3R	X	0	0	0	0	0	X	X	X	X	0	0	0	IP14
3S	X	X	X	X	X	0	X	X	X	X	0	0	0	IP54
4	X	X	X	X	X	0	X	X	X	X	X	X	0	IP56
4X	X	X	X	X	X	0	X	X	X	X	X	X	0	IP56
5	X	X	X	X	X	0	X	X	0	0	0	0	0	IP52
6	X	X	X	X	X	X	X	X	X	X	X	X	X	IP67
6P	X	X	X	X	X	X	X	X	X	X	X	X	X	IP67
12	X	X	X	X	X	X	X	X	X	X	X	0	0	IP52
12K	X	X	X	X	X	X	X	X	X	X	X	0	0	IP52
13	X	X	X	X	X	0	X	X	X	X	0	0	0	IP54

Note 1—This table can only be used to determine NEMA enclosures required to meet IP specified enclosures.
Note 2—"X" indicates that the NEMA type enclosure is judged to comply with the requirements for the corresponding characteristic numerals of IEC 60529.
Note 3—"O" indicates that the NEMA type enclosure is judged not to satisfy the requirements corresponding to the characteristic numerals of IEC 60529.
Example 1: IP56 enclosure requirements can be satisfied with the following NEMA enclosure Types: NEMA 4 and 4X.
Example 2: IP22 enclosure requirements can be satisfied with the following NEMA enclosure Types: NEMA 1 and 2.

Table C.3—Degree of protection of enclosures in accordance with IEC 60529

First number (degree of protection against solid objects)		Second number (degree of protection against water)	
0	Nonprotected	0	Nonprotected
1	Protected against a solid object greater than 50 mm, such as a hand.	1	Protected against water dripping vertically, such as condensation.
2	Protected against a solid object greater than 12 mm, such as a finger.	2	Protected against dripping water when tilted up to 15°.
3	Protected against a solid object greater than 2.5 mm, such as wire or a tool.	3	Protected against water spraying at an angle of up to 60°.

Copyright © 2002 IEEE. All rights reserved.
Copyright The Institute of Electrical and Electronics Engineers, Inc.
Provided by IHS under license with IEEE
No reproduction or networking permitted without license from IHS
Not for Resale

Table C.3—Degree of protection of enclosures in accordance with IEC 60529 *(continued)*

First number (degree of protection against solid objects)		Second number (degree of protection against water)	
4	Protected against a solid object greater than 1.0 mm, such as wire or thin strips.	4	Protected against water splashing from any direction.
5	Dust-protected. Prevents ingress of dust sufficient to cause harm.	5	Protected against jets of water from any direction.
6	Dust tight. No dust ingress.	6	Protected against heavy seas of powerful jets of water. Prevents ingress sufficient to cause harm.
		7	Protected against harmful ingress of water when immersed between a depth of 150 mm to 1 m.
		8	Protected against submersion. Suitable for continuous immersion in water.
NOTE—The IP classification system designates, by means of a number, the degree of protection provided by an enclosure against impact or dust or water ingress. The IP classification should not be construed as indicating corrosion resistance.			

Table C.4—Approximate US enclosure type equivalent to IP codes (ingress protection)

NOTE—There is no exact correlation between NEMA Types and IEC IP codes.

NEMA type	Definition	IEC IP	Definition
1	General purpose, indoor	10	Protection from solid object larger than 50 mm
2	Suitable where severe condensation present	11	Protection against dripping water, spillage, (not rain)
3	Weathertight against rain and sleet	54	Dustproof and resistant to constant splashing water
3R	Less severe than NEMA 3	14	Protection from splashing water
4	Watertight Resistant to direct water jet spray	56	Dust and water jet spray
4X	Same as NEMA 4, although corrosion resistant; stainless, nonmetallic	56	Dust and water jet spray
5	Dusttight	52	Dustproof and resistant to dripping water (not rain)

Copyright © 2002 IEEE. All rights reserved.

Copyright The Institute of Electrical and Electronics Engineers, Inc.
Provided by IHS under license with IEEE
No reproduction or networking permitted without license from IHS
Not for Resale

Table C.4—Approximate US enclosure type equivalent to IP codes (ingress protection)
(continued)

NEMA type	Definition	IEC IP	Definition
6	Limited submersion in water	67	Protected against effects of immersion not below one meter depth
7	Explosionproof Contains gaseous internal ignition		
12	Dusttight and Dripproof	52	Dust-proof and resistant to dripping water (not rain).
13	Oiltight and Dusttight Constructed with special gasketing to resist oil and liquid chemical penetration	54	Dustproof and resistant to constant splashing water.

Copyright © 2002 IEEE. All rights reserved.
Copyright The Institute of Electrical and Electronics Engineers, Inc.
Provided by IHS under license with IEEE
No reproduction or networking permitted without license from IHS
Not for Resale

Annex D

(informative)

Bibliography

[B1] ANSI C39.1-1981 (R 1992), Requirements for Electrical Analog Indicating Instruments.[31]

[B2] ASTM D2671-95, Standard Test Methods for Heat-Shrinkable Tubing for Electrical Use.[32]

[B3] ASTM D2471, Gel Time and Peak Exothermic Temperature of Reacting Thermosetting Resins.

[B4] ASTM D4066-94B Type VIII, Standard Test Methods for Determination of Relative Viscosity, Melting Point, and Moisture Content of Polyamide (PA).

[B5] ASTM D470-93, Standard Methods of Testing Crosslinked Insulations and Jackets for Wire and Cable.

[B6] ASTM E662-97, Standard Test Method for Specific Optical Density of Smoke Generated by Solid Materials.

[B7] ASTM G23-96, Standard Practice for Operating Light-Exposure Apparatus (Carbon-Arc Type) With and Without Water for Exposure of Nonmetallic Materials.

[B8] 46 CFR 113.25-25, General Emergency Alarm Systems for Manned Ocean and Coastwise Barge.[33]

[B9] 46 CFR 113.25-30, General Emergency Alarm Systems for Barges of 300 or More Gross Tons with Sleeping Accommodations for More than Six Persons.

[B10] CSA C22.2, No. 03, Vertical Flame Test—Cables in Cable Tray, Test Methods for Electrical Wire Cable.[34]

[B11] *Distribution, Power, and Regulating Transformers Standards Collection*, 1995 Edition.

[B12] IACS Unified Requirement M 59 (1996), Control and Safety Systems for Dual Fuel Diesel Engines.

[B13] ICEA T-28-562-1995, Test Method for Measurement of Hot Creep of Polymeric Insulations.[35]

[B14] IEC 60034 (1998), Rotating electrical machines.[36]

[B15] IEC 60056 (1987), High-voltage alternating-current circuit-breakers.[37]

[31]ANSI publications are available from the Sales Department, American National Standards Institute, 25 West 43rd Street, 4th Floor, New York, NY 10036, USA (http://www.ansi.org/).

[32]ASTM publications are available from the American Society for Testing and Materials, 100 Barr Harbor Drive, West Conshohocken, PA 19428-2959, USA (http://www.astm.org/).

[33]CFR publications are available from the Superintendent of Documents, U.S. Government Printing Office, P.O. Box 37082, Washington, DC 20013-7082, USA (http://www.access.gpo.gov/).

[34]CSA publications are available from the Canadian Standards Association (Standards Sales), 178 Rexdale Blvd., Etobicoke, Ontario, Canada M9W 1R3 (http://www.csa.ca/).

[35]ICEA publications are available from ICEA, P.O. Box 20048, Minneapolis, MN 55420, USA (http://www.icea.org/).

[36]IEC publications are available from the Sales Department of the International Electrotechnical Commission, Case Postale 131, 3, rue de Varembé, CH-1211, Genève 20, Switzerland/Suisse (http://www.iec.ch/). IEC publications are also available in the United States from the Sales Department, American National Standards Institute, 11 West 42nd Street, 13th Floor, New York, NY 10036, USA.

Copyright © 2002 IEEE. All rights reserved.

Copyright The Institute of Electrical and Electronics Engineers, Inc.
Provided by IHS under license with IEEE
No reproduction or networking permitted without license from IHS
Not for Resale

[B16] IEC 60092-350 (2001), Electrical installations in ships—Part 350: Shipboard power cables—General construction and test requirements.

[B17] IEC 60185 (1987), Current transformers.[38]

[B18] IEC 60186 (1987), Voltage transformers.

[B19] IEC 60298 (1990), A.C. metal-enclosed switchgear and controlgear for rated voltages above 1KV and up to and including 52 kV.

[B20] IEC 60331(1970), Fire-resisting characteristics of electric cables.[39]

[B21] IEC 60332-1 (1993), Tests on electric cables under fire conditions—Part 1: Test on single vertical insulated wire or cable.

[B22] IEC 60437 (1997), Radio interference test on high-voltage insulators.

[B23] IEC 60470 (2000-05), 17A (High-voltage switchgear and controlgear).

[B24] IEC 60502-1 (1998-11), Power cables with extruded insulation and their accessories for rated voltages from 1 kV (Um = 1, 2 kV) up to 30 kV (Um = 36 kV —Part 1: Cables for rated voltages of 1 kV (Um = 1, 2 kV) and 3 kV (Um = 3, 6 kV).

[B25] IEC 60694 (1996), Common specifications for high-voltage switchgear and controlgear standards.

[B26] IEC 60794-2 (1998), Optical fibre cables—Part 2: Product Specifications.

[B27] IEC 60947-2 (1995), Low-voltage switchgear and controlgear—Part 2: Circuit-breakers.

[B28] IEC 60947-6-1 (1998), Low-voltage switchgear and controlgear—Part 6-1: Multiple function equipment—automatic transfer switching equipment.

[B29] IEC 60966, Radio Frequency and Coaxial Cable Power Convertors—Adjustable Speed Electric Drive Systems—General Requirements—Part 1: Rating Specifications, Particularly for D.C. Motor Drives

[B30] IEC 62271-100 (2001), High-voltage switchgear and controlgear—Part 100: High-voltage alternating-current circuit-breakers.

[B31] IEEE 100™, *The Authoritative Dictionary of IEEE Standards Terms,* Seventh Edition.[40, 41]

[B32] IEEE Std C37.20.2-1993, IEEE Standard for Metal-Clad and Station-Type Cubicle Switchgear.

[B33] IEEE Std 4™-1995, IEEE Standard Techniques for High-Voltage Testing.

[37]IEC 60556 (1987) has been withdrawn; however, copies can be obtained from Global Engineering, 15 Inverness Way East, Englewood, CO 80112-5704, USA, tel. (303) 792-2181 (http://global.ihs.com/).

[38]IEC 60185 (1987) has been withdrawn; however, copies can be obtained from Global Engineering, 15 Inverness Way East, Englewood, CO 80112-5704, USA, tel. (303) 792-2181 (http://global.ihs.com/).

[39]IEC 60331 (1970) has been withdrawn; however, copies can be obtained from Global Engineering, 15 Inverness Way East, Englewood, CO 80112-5704, USA, tel. (303) 792-2181 (http://global.ihs.com/).

[40]The IEEE standards or products referred to in Annex D are trademarks owned by the Institute of Electrical and Electronics Engineers, Incorporated.

[41]IEEE publications are available from the Institute of Electrical and Electronics Engineers, 445 Hoes Lane, P.O. Box 1331, Piscataway, NJ 08855-1331, USA (http://standards.ieee.org/).

Copyright © 2002 IEEE. All rights reserved.
Copyright The Institute of Electrical and Electronics Engineers, Inc.
Provided by IHS under license with IEEE
No reproduction or networking permitted without license from IHS
Not for Resale

[B34] IEEE Std 74™-1958 (Reaff 1974), IEEE Standard for Test Code for Industrial Control (600 Volts or Less).

[B35] IEEE Std 113™-1973, IEEE Guide Test Code for Direct-Current Machines.

[B36] IEEE Std 114™-1982, IEEE Standard Test Procedure for Single-Phase Induction Motors.

[B37] IEEE Std 242-2001, IEEE Recommended Practices for Protection and Coordination of Industrial Power Systems—IEEE Buff Book™.

[B38] IEEE Std 519-1992, IEEE Recommended Practices and Requirements for Harmonic Control in Electric Power Systems.

[B39] ISA-RP 12.6-1995, Wiring Practices for Hazardous (Classified) Locations-Instrumentation, Part I: Intrinsic Safety.[42]

[B40] MIL-C-17G, General Specification for Cables, Radio Frequency, Flexible and Semirigid.[43]

[B41] MIL-DTL-915G, General Specification for Cable, Electrical, for Shipboard Use.

[B42] MIL-C-24640A, General Specification for Cable, Electrical, Lightweight for Shipboard Use.

[B43] MIL-C-24643A, General Specification for Cable and Cords, Electrical, Low Smoke, for Shipboard Use.

[B44] MIL-HDBK-299-October 1994, Cable Comparison Handbook-Data Pertaining to Electric Shipboard Cable.

[B45] MIL-W-16878F, General Specifications for Wire, Electrical, Insulated.

[B46] MIL-W-22759E, Wire, Electrical, Fluoropolymer-Insulated, Copper or Copper Alloy.

[B47] NEMA AB1-1975, Molded Case Circuit Breakers.[44]

[B48] NEMA FU1-1986, Low-Voltage Cartridge Fuses.

[B49] NEMA SG3-1975, Low-Voltage Power Circuit Breakers.

[B50] NEMA ST1-1978, Specialty Transformers (Except General Purpose Type).

[B51] NEMA WC 57-1995 (REV-1 1997), Standard for Control Cables (ICEA S-73-532).

[B52] NEMA WC 58 Portable and Power Feeder Cable for Use in Mines and Similar Applications (ICEA S-75-381).

[B53] NEMA 250-1991, Enclosures for Electrical Equipment (1000 Volts Maximum).

[42]ISA standards are available from Global Engineering Documents, 15 Inverness Way East, Englewood, Colorado 80112, USA (http://global.ihs.com/).

[43]MIL publications area available from Customer Service, Defense Printing Service, 700 Robbins Ave., Bldg. 4D, Philadelphia, PA 19111-5094 (http://store.mil-standards.com).

[44]UL standards are available from Global Engineering Documents, 15 Inverness Way East, Englewood, Colorado 80112, USA (http://global.ihs.com/).

Copyright © 2002 IEEE. All rights reserved.

Copyright The Institute of Electrical and Electronics Engineers, Inc.
Provided by IHS under license with IEEE
No reproduction or networking permitted without license from IHS Not for Resale

[B54] NFPA 77-1993, Recommended Practice on Static Electricity.[45]

[B55] NFPA 99-1996, Standard for Health Care Facilities.

[B56] NFPA 496-1993, Standard for Purged and Pressurized Enclosures for Electrical Equipment.

[B57] UL 44-1999, Standard for Safety for Rubber-Insulated Wires and Cables.[46]

[B58] UL 1581-1991, Reference Standard for Electrical Wires, Cables, and Flexible Cords.

[45]NFPA publications are published by the National Fire Protection Association, Batterymarch Park, Quincy, MA 02269, USA (http://www.nfpa.org/).

[46]UL standards are available from Global Engineering Documents, 15 Inverness Way East, Englewood, Colorado 80112, USA (http://global.ihs.com/).

Copyright © 2002 IEEE. All rights reserved.
Copyright The Institute of Electrical and Electronics Engineers, Inc.
Provided by IHS under license with IEEE
No reproduction or networking permitted without license from IHS
Not for Resale