IEEE Std 449-1998
(Revision of
IEEE Std 449-1990)

IEEE Standard for Ferroresonant Voltage Regulators

Sponsor

Electronics Transformer Technical Committee
of the
IEEE Power Electronics Society

Approved 8 December 1998

IEEE-SA Standards Board

Abstract: Ferroresonant transformers used as regulators in electronic power supplies and in other equipment are covered. Guides to application and test procedures are included.
Keywords: controlled ferroresonant regulators, ferroresonant transformer regulators, series feroresonant regulators, series-parallel ferroresonant regulators

---

The Institute of Electrical and Electronics Engineers, Inc.
345 East 47th Street, New York, NY 10017-2394, USA

Copyright © 1999 by the Institute of Electrical and Electronics Engineers, Inc.
All rights reserved. Published 10 June 1999. Printed in the United States of America.

Print: ISBN 0-7381-1533-9 SH94718
PDF: ISBN 0-7381-1534-7 SS94718

No part of this publication may be reproduced in any form, in an electronic retrieval system or otherwise, without the prior written permission of the publisher.

--`,,`-`-`,,`,,`,`,,`---

Copyright The Institute of Electrical and Electronics Engineers, Inc.
Provided by IHS under license with IEEE
No reproduction or networking permitted without license from IHS Not for Resale

IEEE Standards documents are developed within the IEEE Societies and the Standards Coordinating Committees of the IEEE Standards Association (IEEE-SA) Standards Board. Members of the committees serve voluntarily and without compensation. They are not necessarily members of the Institute. The standards developed within IEEE represent a consensus of the broad expertise on the subject within the Institute as well as those activities outside of IEEE that have expressed an interest in participating in the development of the standard.

Use of an IEEE Standard is wholly voluntary. The existence of an IEEE Standard does not imply that there are no other ways to produce, test, measure, purchase, market, or provide other goods and services related to the scope of the IEEE Standard. Furthermore, the viewpoint expressed at the time a standard is approved and issued is subject to change brought about through developments in the state of the art and comments received from users of the standard. Every IEEE Standard is subjected to review at least every five years for revision or reaffirmation. When a document is more than five years old and has not been reaffirmed, it is reasonable to conclude that its contents, although still of some value, do not wholly reflect the present state of the art. Users are cautioned to check to determine that they have the latest edition of any IEEE Standard.

Comments for revision of IEEE Standards are welcome from any interested party, regardless of membership affiliation with IEEE. Suggestions for changes in documents should be in the form of a proposed change of text, together with appropriate supporting comments.

Interpretations: Occasionally questions may arise regarding the meaning of portions of standards as they relate to specific applications. When the need for interpretations is brought to the attention of IEEE, the Institute will initiate action to prepare appropriate responses. Since IEEE Standards represent a consensus of all concerned interests, it is important to ensure that any interpretation has also received the concurrence of a balance of interests. For this reason, IEEE and the members of its societies and Standards Coordinating Committees are not able to provide an instant response to interpretation requests except in those cases where the matter has previously received formal consideration.

Comments on standards and requests for interpretations should be addressed to:

Secretary, IEEE-SA Standards Board
445 Hoes Lane
P.O. Box 1331
Piscataway, NJ 08855-1331
USA

Note: Attention is called to the possibility that implementation of this standard may require use of subject matter covered by patent rights. By publication of this standard, no position is taken with respect to the existence or validity of any patent rights in connection therewith. The IEEE shall not be responsible for identifying patents for which a license may be required by an IEEE standard or for conducting inquiries into the legal validity or scope of those patents that are brought to its attention.

Authorization to photocopy portions of any individual standard for internal or personal use is granted by the Institute of Electrical and Electronics Engineers, Inc., provided that the appropriate fee is paid to Copyright Clearance Center. To arrange for payment of licensing fee, please contact Copyright Clearance Center, Customer Service, 222 Rosewood Drive, Danvers, MA 01923 USA; (978) 750-8400. Permission to photocopy portions of any individual standard for educational classroom use can also be obtained through the Copyright Clearance Center.

--`,,`-`-`,,`,,`,`,,`---

Copyright The Institute of Electrical and Electronics Engineers, Inc.
Provided by IHS under license with IEEE
No reproduction or networking permitted without license from IHS Not for Resale

Introduction

(This introduction is not part of IEEE Std 449-1998, IEEE Standard for Ferroresonant Voltage Regulators.)

The purpose of this standard is to provide a common ground of understanding between engineers involved in the design, manufacture, sale, and use of ferroresonant transformers. It pertains to ferroresonant transformers used as regulators in electronic power supplies and in other equipment where the inherent properties of voltage regulation and current limiting are useful.

This publication was prepared by the Ferroresonant Transformer Subcommittee of the Electronics Transformer Technical Committee of the IEEE Power Electronics Society. The subcommittee had the following membership:

Hassan Yarpezeshkan, *Chair*

Jack S. Andresen	Charles J. Elliott	David N. Ratliff
Robert B. Beers	Paul K. Goethe	Robert Lee Sell
I. D. Bolt	W. D. Goethe	J. Silgailis
J. E. Cronk	Rohn R. Grant	Bruce D. Thackwray
John DeCramer	Harold E. Lee	Matthew A. Wilkowski

The following members of the balloting committee voted on this standard:

Jack S. Andresen	Rohn Grant	Glenn Skutt
Robert B. Beers	Ryusuke Hasegawa	Charles Sullivan
Lowell Bosley	Harold E. Lee	John Tardy
John DeCramer	Ashraf Lofti	Bruce D. Thackwray
Charles J. Elliott	David N. Ratliff	Matthew A. Wilkowski
Paul K. Goethe	Robert Lee Sell	Hassan Yarpezeshkan

The Institute wishes to acknowledge its indebtedness to those who have given so freely of their time and knowledge in the development of the original version of this standard. The followship of authors of the inaugural publication, IEEE Std 449-1984, include the following distinguished members:

Clyde H. Nicholson, *Chair* **Dale Leppart,** *Secretary*

Jack Adams	Hermann Fickenscher	Robert L. Sell
Lawrie Anderson	Paul K. Goethe	Ray Taylor
Dale Corel	Harold E. Lee	Hermann Tillinger
Wayne C. Emerson	Bill Lucarz	Donald A. Trott

When the IEEE-SA Standards Board approved this standard on 8 December 1998, it had the following membership:

Richard J. Holleman, *Chair* **Donald N. Heirman,** *Vice Chair*

Judith Gorman, *Secretary*

Satish K. Aggarwal	James H. Gurney	L. Bruce McClung
Clyde R. Camp	Jim D. Isaak	Louis-François Pau
James T. Carlo	Lowell G. Johnson	Ronald C. Petersen
Gary R. Engmann	Robert Kennelly	Gerald H. Peterson
Harold E. Epstein	E. G. “Al” Kiener	John B. Posey
Jay Forster*	Joseph L. Koepfinger*	Gary S. Robinson
Thomas F. Garrity	Stephen R. Lambert	Hans E. Weinrich
Ruben D. Garzon	Jim Logothetis	Donald W. Zipse
	Donald C. Loughry	

*Member Emeritus

Greg Kohn
IEEE Standards Project Editor

Copyright © 1999 IEEE. All rights reserved.

Copyright The Institute of Electrical and Electronics Engineers, Inc.
Provided by IHS under license with IEEE
No reproduction or networking permitted without license from IHS
Not for Resale

Contents

1. Scope 1

2. References 1

3. Definitions 2

4. Auxiliary circuits to provide special features 8

   4.1 Ferroresonant voltage regulator with harmonic filter (harmonic neutralized) 8

5. Service conditions 12

   5.1 Environmental 12
   5.2 Mechanical 12

6. Ratings 13

   6.1 Input rating 13
   6.2 Output rating 13
   6.3 Resonant section rating 14
   6.4 Thermal rating 14
   6.5 Electric strength 15
   6.6 Magnetic radiation 15
   6.7 Acoustic noise 15
   6.8 Corona 16

7. Nameplate and other markings 16

   7.1 Nameplate 16
   7.2 Nameplate information 16
   7.3 Termination markings 17

8. Test procedures 17

   8.1 Electric strength tests 17
   8.2 Input characteristic (resonating capacitor connected) tests 18
   8.3 Output characteristics 19
   8.4 Overload characteristics 20
   8.5 Transient excursions (overshoot and undershoot) 20
   8.6 Temperature rise 20
   8.7 External flux field 21
   8.8 Audible sound-level tests 21
   8.9 Polarity 22

9. Application guide 23

   9.1 Introduction 23
   9.2 Shunt-type ferroresonant regulators 24
   9.3 Specific applications 26

10. Maintenance guide 29

11. Bibliography 31

Copyright © 1999 IEEE. All rights reserved.
Copyright The Institute of Electrical and Electronics Engineers, Inc.
Provided by IHS under license with IEEE
No reproduction or networking permitted without license from IHS
Not for Resale

IEEE Standard for Ferroresonant Voltage Regulators

1. Scope

This standard pertains to ferroresonant voltage regulators that operate at relatively constant frequencies and provide substantially constant output voltages in spite of relatively large changes of input voltage. It also covers controlled ferroresonant regulators that maintain substantially constant output voltages regardless of variations, within limits, of input voltage, temperature, frequency, and output load. Guides to application and test procedures are included. Provisions are made for relating the characteristics of ferroresonant regulators to associated rectifiers and circuits. Definitions pertaining to ferroresonance and ferroresonant regulators that have not been found elsewhere are included with an appropriate discussion.

This standard includes, but is not limited to, the following types of ferroresonant regulators:

a) Series ferroresonant regulators
b) Series-parallel ferroresonant regulators (electrically connected)
c) Ferroresonant transformer regulators (magnetically coupled)
d) Controlled ferroresonant regulators

2. References

This standard shall be used in conjunction with the following publications. When the following publications are superseded by an approved revision, the revision shall apply.

ANSI S1.2-1962 (Reaff 1976), American National Standard Method for the Physical Measurement of Sound.[1]

ANSI S1.4-1983, American National Standard Specification for Sound Level Meters.[2]

IEEE Std 100-1996, IEEE Standard Dictionary of Electrical and Electronics Terms, Sixth Edition.[3]

---

[1]ANSI S1.2-1962 has been withdrawn; however, copies can be obtained from the Sales Department, American National Standards Institute, 11 West 42nd Street, 13th Floor, New York, NY 10036, USA (http://www.ansi.org/).

[2]ANSI publications are available from the Sales Department, American National Standards Institute, 11 West 42nd Street, 13th Floor, New York, NY 10036, USA (http://www.ansi.org/).

--`,,`-`-`,,`,,`,`,,`---

Copyright © 1999 IEEE. All rights reserved.

Copyright The Institute of Electrical and Electronics Engineers, Inc.
Provided by IHS under license with IEEE
No reproduction or networking permitted without license from IHS
Not for Resale

IEEE Std 260.1-1993, American National Standard Letter Symbols for Units of Measurement (SI Units, Customary Inch-Pound Units, and Certain Other Units).

IEEE Std 280-1985 (Reaff 1997), IEEE Standard Letter Symbols for Quantities Used in Electrical Science and Electrical Engineering.

IEEE Std 389-1996, IEEE Recommended Practice for Testing Electronics Transformers and Inductors.

IEEE Std 436-1977, IEEE Guide for Making Corona (Partial Discharge) Measurements on Electronics Transformers.[4]

3. Definitions

For purposes of this standard, the following terms and definitions apply. IEEE Std 100-1996[5], The IEEE Standard Dictionary of Electronics and Electrical Terms, should be referenced for terms not defined in this clause.

The letters and graphic symbols used in this standard shall be in accordance with IEEE Std 260-1978 and IEEE Std 280-1985 insofar as they apply, except as herein stated.

3.1 air gap: The space between the magnetic shunt and the core, used to establish the required reluctance of the shunt flux path.

3.2 basic series ferroresonant voltage regulator: This regulator consists of a series connection of a saturating inductor and a capacitor connected across the source. The load is inductively or conductively coupled to the saturating inductor. See Figure 1.

NOTE—Applications of this circuit are limited by the requisite large ratio of reactive to real powers.

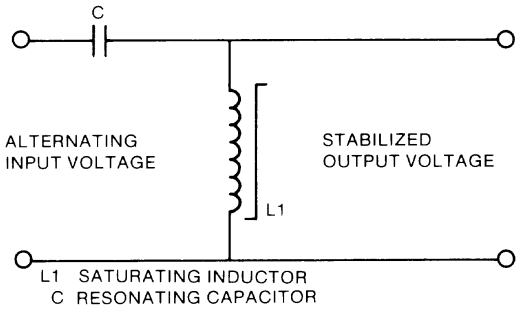

Figure 1—Basic series ferroresonant voltage regulator

3.3 basic series parallel ferroresonant voltage regulator: This regulator consists of an essentially linear inductor connected in series with a parallel combination of a nonlinear inductor and a capacitor. This

[3]IEEE publications are available from the Institute of Electrical and Electronics Engineers, 445 Hoes Lane, P.O. Box 1331, Piscataway, NJ 08855-1331, USA (http://www.standards.ieee.org/).

[4]IEEE Std 436-1977 has been withdrawn; however, copies can be obtained from Global Engineering, 15 Inverness Way East, Englewood, CO 80112-5704, USA, tel. (303) 792-2181 (http://www.global.ihs.com/).

[5]Information on references can be found in Clause 2.

Copyright © 1999 IEEE. All rights reserved.
Copyright The Institute of Electrical and Electronics Engineers, Inc.
Provided by IHS under license with IEEE
No reproduction or networking permitted without license from IHS
Not for Resale

combination is connected across the source as shown in Figure 2. Load voltage is derived by inductive or conductive coupling to the nonlinear inductor.

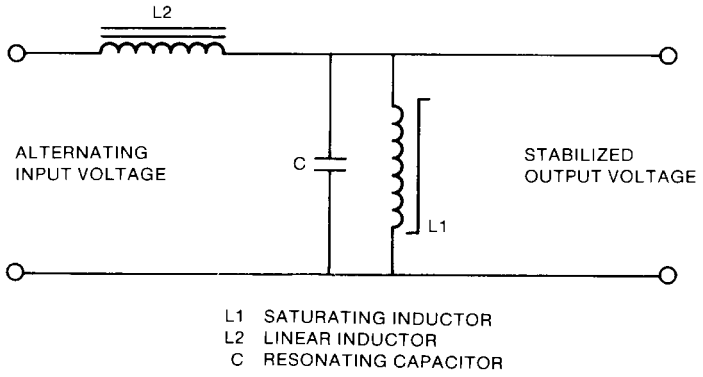

Figure 2—Basic series parallel ferroresonant voltage regulator

3.4 controlled ferroresonant regulators: A regulator consisting basically of an inductor connected in series with a parallel combination of a capacitor and controllable simulated inductor. This combination is connected across the source as shown in Figure 3. Stabilized output voltage is derived by inductive or conductive coupling to the parallel combination of C and the controllable simulated inductor. In a controlled ferroresonant regulator the controllable simulated inductor can be a combination of switching devices (such as thyristors or transistors) and linear or saturating inductors. This circuit, in combination with a control input to the simulated inductor, controls the flux swing (or simulated flux swing) in the saturated (or simulated saturating) inductor, thereby controlling the stabilized output voltage.

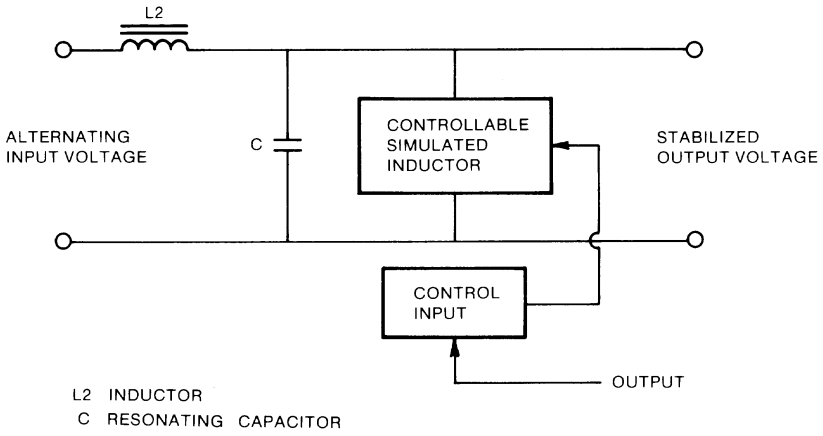

Figure 3—Controlled ferroresonant regulator schematic

3.5 ferroresonance: The steady-state mode of operation that exists when an alternating voltage of sufficient magnitude is applied to a circuit consisting of capacitance and ferromagnetic inductance causing changes in the ferromagnetic inductance that are repeated each half cycle.

NOTE—When certain critical relations exist among circuit parameters, self-sustaining subharmonic or harmonic oscillations may also be excited in the circuit.

Copyright © 1999 IEEE. All rights reserved.

Copyright The Institute of Electrical and Electronics Engineers, Inc.
Provided by IHS under license with IEEE
No reproduction or networking permitted without license from IHS
Not for Resale

3.6 ferroresonant voltage regulation: The effect obtained by the limiting action of the saturation characteristic of the magnetic material in a ferroresonant circuit, which regulates the output voltage over a specified range of input voltages and a specified frequency of excitation.

NOTE—This effect regulates the half-cycle average value of the output voltage.

3.7 ferroresonant voltage regulator transformer: A high-reactance transformer employing magnetic shunts that allow the magnetic functions of the basic series parallel ferroresonant regulator circuits to be combined into a single magnetic component. See Figure 4 and Figure 5.

NOTE—Hereafter this will be referred to as a ferroresonant transformer.

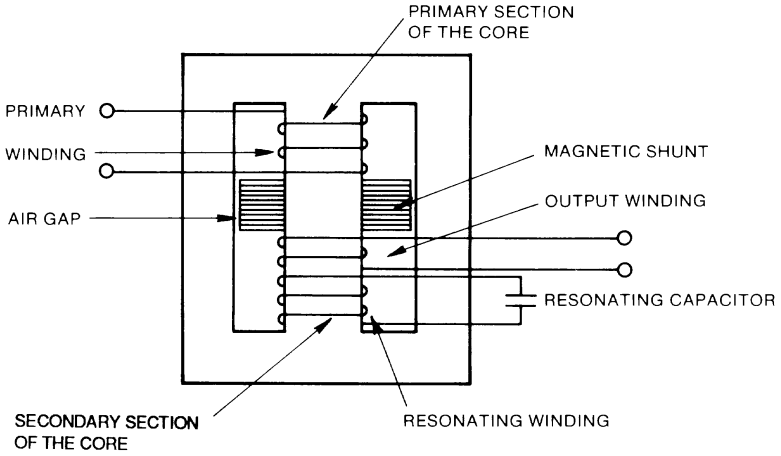

Figure 4—Common form of the ferroresonant transformer voltage regulator

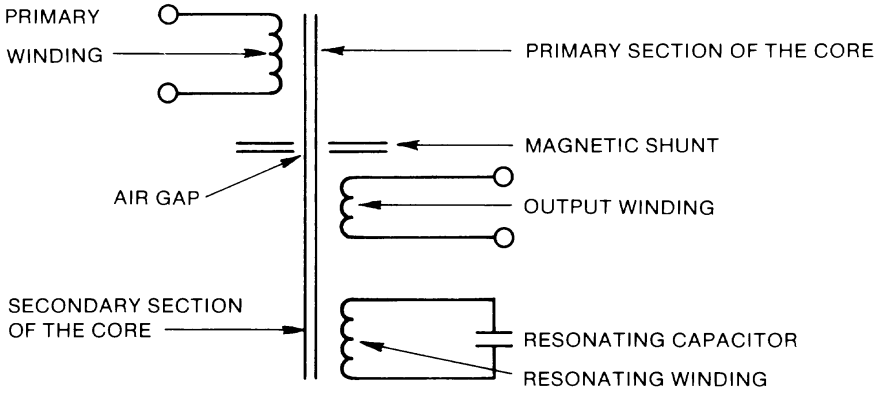

Figure 5—Schematic of a common form of the ferroresonant transformer voltage regulator

3.8 jump resonance: A phenomenon associated with ferroresonant regulators where the output voltage suddenly changes to the regulating mode of operation at some value of the ascending input voltage (see Figure 6 and Figure 7), or suddenly drops out of the regulating mode of operation with descending input voltage.

Copyright © 1999 IEEE. All rights reserved.
Copyright The Institute of Electrical and Electronics Engineers, Inc.
Provided by IHS under license with IEEE
No reproduction or networking permitted without license from IHS
Not for Resale

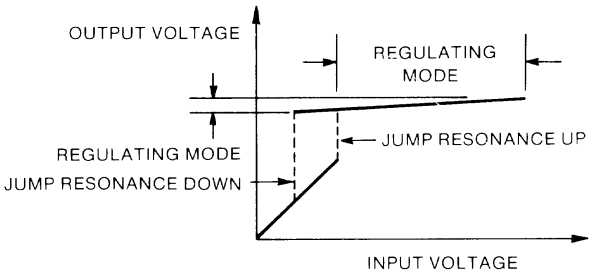

Figure 6—Output versus input voltage with jump resonance

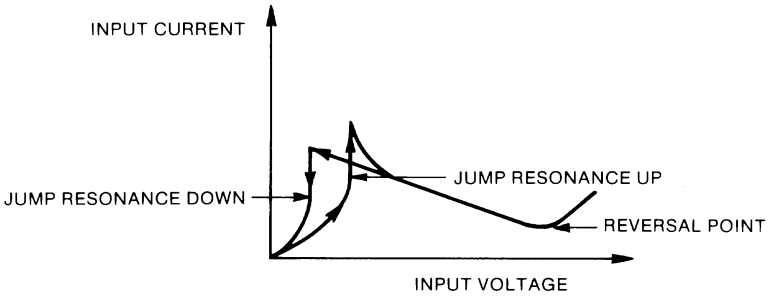

Figure 7—Reversal point with jump resonance

3.9 magnetic shunt: The section of the core of the ferroresonant transformer that provides the major path for flux generated by the primary winding current that does not link the secondary winding. In addition, the shunts provide a major path for the flux resulting from the output and resonating winding currents that do not link the primary winding.

3.10 output voltage versus input voltage characteristics: Ferroresonant regulators may have output versus input characteristics as shown in Figure 6 and Figure 8.

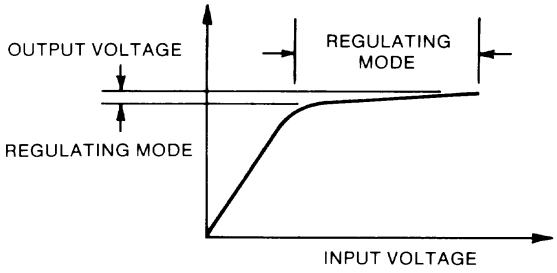

Figure 8—Output versus input voltage without jump resonance

3.11 output winding: The winding of the ferroresonant transformer used to provide the regulated output voltage.

NOTE—The output winding is wound on the secondary section of the core and separated from the primary by a magnetic shunt.

3.12 overall regulation (power supplies): The maximum amount that the output will change as a result of the specified change in line voltage, output load, input frequency, temperature, or time.

Copyright © 1999 IEEE. All rights reserved.

Copyright The Institute of Electrical and Electronics Engineers, Inc.
Provided by IHS under license with IEEE
No reproduction or networking permitted without license from IHS
Not for Resale

NOTE—Line regulation, load regulation, effect of frequency variation, stability, and temperature coefficient are defined and usually specified separately as follows:

— *Line regulation.* The maximum amount that the output voltage or current will change as the result of a specified change in line voltage. (Regulation is given either as a percentage of the rated output voltage or current, or as an absolute change, ΔE or ΔI.)
— *Load regulation.* The maximum amount that the output voltage will change as the result of a specified change in load current. (Regulation is given either as a percentage of the rated output voltage or as an absolute change, ΔE.)
— *Frequency regulation.* The maximum amount that the output voltage or current will change as the result of a specified change in line frequency. (Regulation is given either as a percentage of the rated output voltage or current, or as an absolute change, ΔE or ΔI.)
— *Temperature coefficient (power supplies).* The percent change in the output voltage or current as a result of a 1 °C change in the ambient operating temperature (percent per degree Celsius).
— *Long-term stability (LTS) (power supplies).* The change in output voltage or current as a function of time, at constant line voltage, load, and ambient temperature (sometimes referred to as *drift*).

3.13 overload characteristic: That portion of the output voltage versus output current characteristic of ferroresonant regulators from rated current to short-circuit current. Figure 9 shows the typical overload characteristic when inductor L2 (see Figure 2) does not saturate. Figure 10 shows the effect of L2 saturation in the overload condition where the short-circuit current is less than maximum overload current.

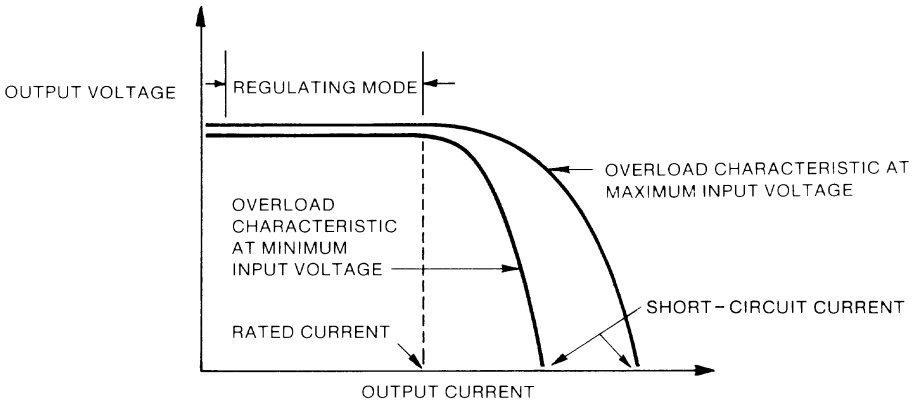

Figure 9—Overload characteristic with unsaturated series inductance

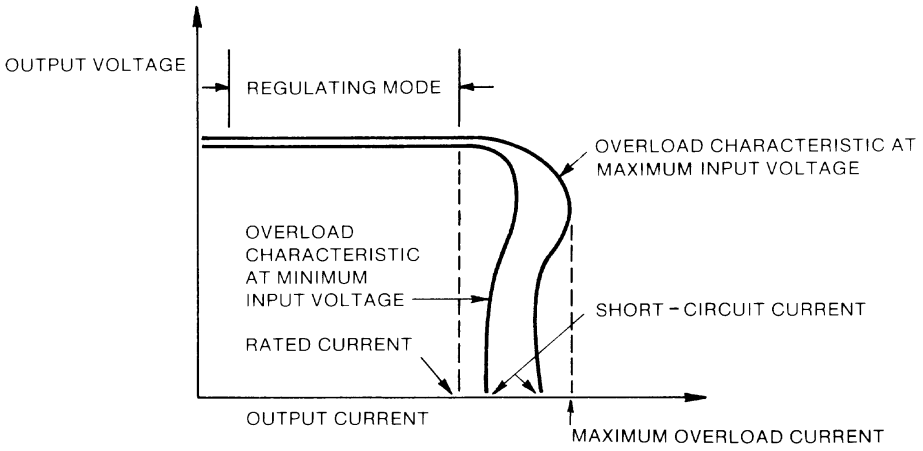

Figure 10—Overload characteristic with saturated series inductance

Copyright © 1999 IEEE. All rights reserved.
Copyright The Institute of Electrical and Electronics Engineers, Inc.
Provided by IHS under license with IEEE
No reproduction or networking permitted without license from IHS
Not for Resale

3.14 primary section of the core: The section of the core of a ferroresonant transformer on which the primary winding is wound.

3.15 primary winding: The winding of the ferroresonant transformer to which the input voltage is applied.

3.16 rated input power: The input power to the ferroresonant regulator with the rated load and under stated operating conditions.

3.17 rated input voltamperes: The input voltamperes to the ferroresonant regulator with the rated load and under stated operating conditions.

3.18 rated output voltamperes of the ferroresonant regulator: The sum of the rated output winding voltamperes under stated operating conditions.

3.19 rated output winding voltamperes: The product of the output voltage and output current (root-mean-square values) at the rated load and under stated operating conditions.

3.20 resonating capacitor: Provides the capacitance associated with ferroresonant regulating circuits for the purpose of producing ferroresonance.

3.21 resonating capacitor voltamperes: The product of the voltage across the resonating capacitor and the current through the resonating capacitor (root-mean-square values) under stated operating conditions.

3.22 resonating winding: The winding of the ferroresonant transformer used to connect the resonating capacitance to the circuit.

NOTE—It is wound on the secondary section of the core and is separated from the primary winding by a magnetic shunt. It may itself be the output winding or a portion of the output winding.

3.23 reversal point: That point on the input current versus input voltage characteristics where the input current reaches a minimum value and begins to increase. See Figure 7 and Figure 11.

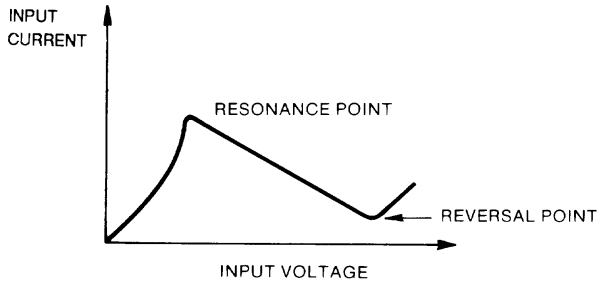

Figure 11—Reversal point without jump resonance

3.24 secondary section of the core: The section of the ferroresonant transformer on which the output and resonating windings are wound. In steady-state operation, this section of the core is normally driven into magnetic saturation.

3.25 short-circuit input voltamperes: The product of the input voltage and input current (rms values) with the resonating winding short circuited.

Copyright © 1999 IEEE. All rights reserved.

Copyright The Institute of Electrical and Electronics Engineers, Inc.
Provided by IHS under license with IEEE
No reproduction or networking permitted without license from IHS
Not for Resale

4. Auxiliary circuits to provide special features

4.1 Ferroresonant voltage regulator with harmonic filter (harmonic neutralized)

4.1.1 Magnetically coupled type

Reduction of output harmonics is obtained by effectively filtering the odd harmonics through use of a neutralizing winding that is magnetically coupled to the resonating winding as shown in Figure 12.

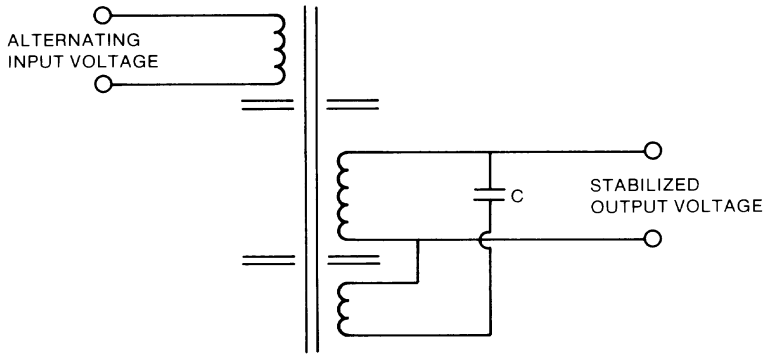

Figure 12—Magnetically coupled tuned-cancellation-type harmonic filter

4.1.1.1 Electrically connected tuned type

Cancellation-type reduction of output harmonics is obtained by effectively filtering the odd harmonics through use of an inductance in series with the resonating capacitor, which filters the major harmonic (the third harmonic) and a saturating inductor to produce odd harmonics that are induced back into the circuit of the regulator to cancel out the remaining odd harmonics. This type of filtering is shown in Figure 13.

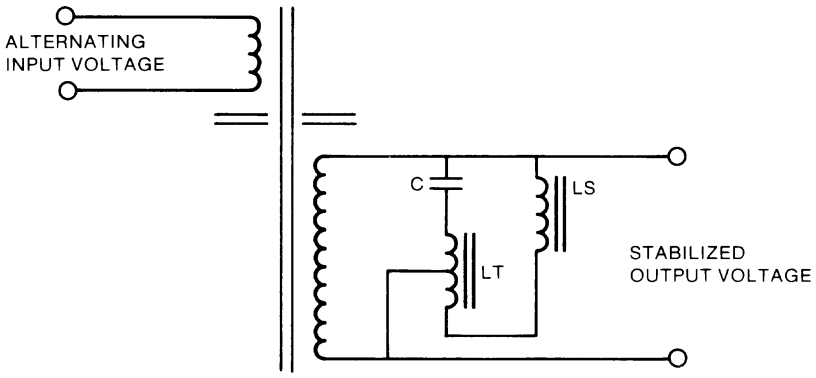

Figure 13—Electrically connected tuned-cancellation-type harmonic filter

Copyright © 1999 IEEE. All rights reserved.
Copyright The Institute of Electrical and Electronics Engineers, Inc.
Provided by IHS under license with IEEE
No reproduction or networking permitted without license from IHS
Not for Resale

4.1.1.2 Tuned type

Reduction of output harmonics is obtained by dividing the resonating capacitance into several sections and connecting them to filter the various odd harmonics that exist in the output of the basic regulator. Usually, proper LC (inductor capacitor) filtering of the 3rd, 5th, and 7th harmonics, as indicated in Figure 14, will reduce the harmonic content to the same low level as accomplished by the methods shown in Figure 12 and Figure 13.

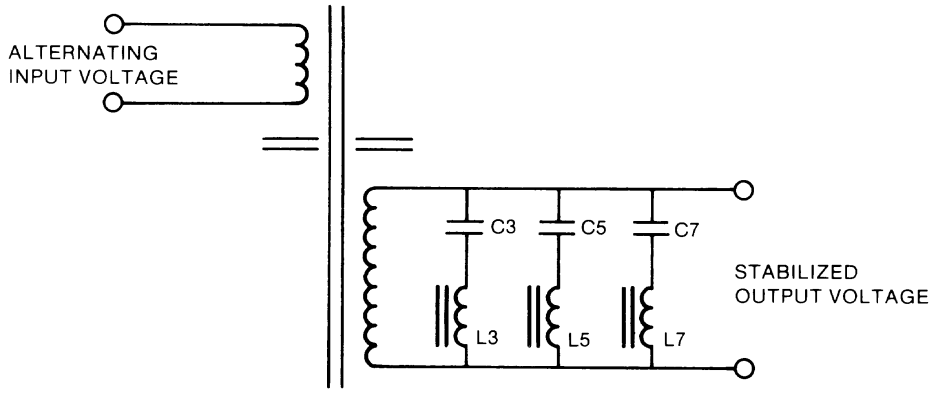

Figure 14—Tuned-type harmonic filter

4.1.2 Ferroresonant voltage regulator with compensating winding

A ferroresonant voltage regulator having a compensating winding connected in series with the output winding to attain improved load and line regulation. (See Figure 15 and Figure 16.)

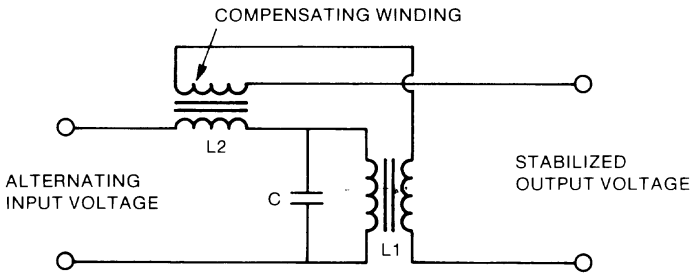

Figure 15—Two-core ferroresonant circuit with compensating winding

4.1.3 Ferroresonant voltage regulator provided with a frequency compensating network

Output voltage of a ferroresonant voltage regulator changes considerably with the change of the input frequency. An LC network can be added to the regulator output, in series with the load, to compensate for this voltage change. (See Figure 17.)

NOTE—Frequency compensating networks of this series type are effective in cases where regulators are operated with constant loads, but they produce only limited improvement of regulation when loads are variable.

Copyright © 1999 IEEE. All rights reserved.

Copyright The Institute of Electrical and Electronics Engineers, Inc.
Provided by IHS under license with IEEE
No reproduction or networking permitted without license from IHS
Not for Resale

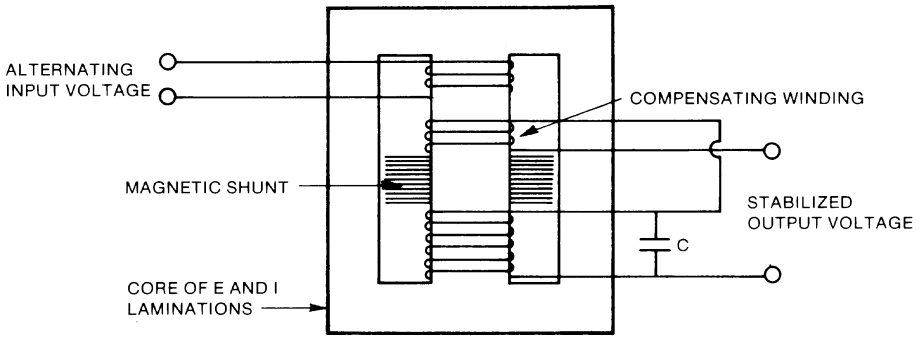

Figure 16—Ferroresonant transformer circuit with compensating winding

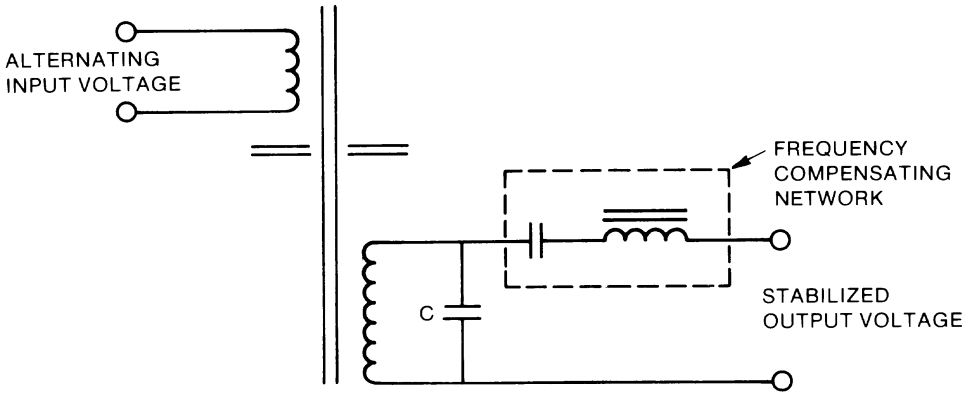

Figure 17—Ferroresonant transformer circuit with frequency compensating network

4.1.4 Ferroresonant voltage regulator with compensation for varying load power factor

Reduction of the amount of output voltage change not caused by resistive loading or by large changes of load power factor is obtained by providing a capacitive impedance, inserted in series with the output, that essentially matches the output reactance of the regulator. The power factor compensation circuit is usually a capacitive reactance obtained by capacitors alone, as shown in Figure 18, or by a transformer and capacitance, as shown in Figure 19.

Copyright © 1999 IEEE. All rights reserved.
Copyright The Institute of Electrical and Electronics Engineers, Inc.
Provided by IHS under license with IEEE
No reproduction or networking permitted without license from IHS
Not for Resale

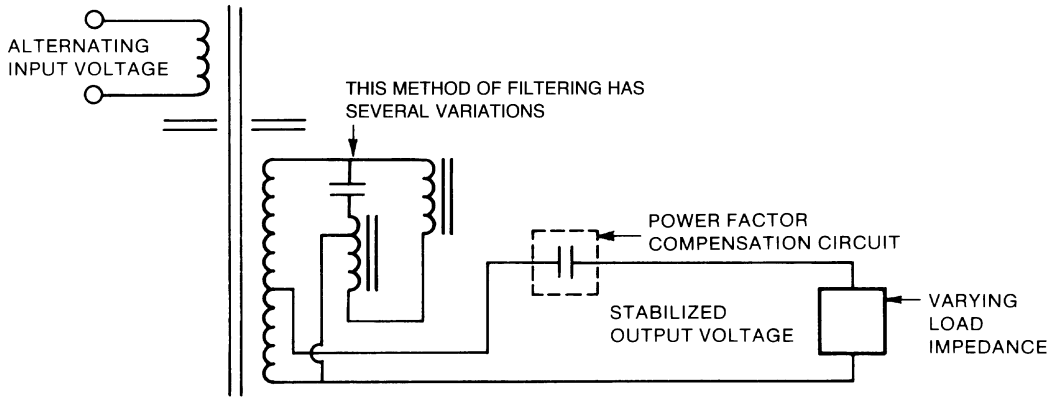

Figure 18—Power factor compensation using series capacitance

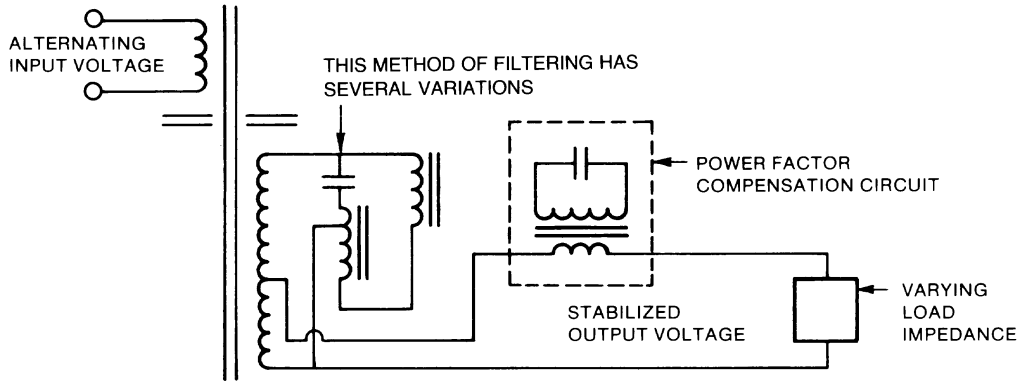

Figure 19—Power factor compensation using transformer-coupled capacitance

Copyright © 1999 IEEE. All rights reserved.

Copyright The Institute of Electrical and Electronics Engineers, Inc.
Provided by IHS under license with IEEE
No reproduction or networking permitted without license from IHS
Not for Resale

5. Service conditions

5.1 Environmental

5.1.1 Operational

Unless otherwise stated in the specification or agreed on between the user and the manufacturer, the components of the ferroresonant regulator shall be required to operate within their temperature limits when in an ambient temperature range between 0 °C and 50 °C, relative humidity between 20% and 90%, and any altitude from 0 m to 1500 m (5000 ft) above sea level. Unless otherwise stated, convection cooling will be assumed. When forced-air cooling is available or required, the direction of air flow, velocity, temperature, and volume flow per minute at the ferroresonant regulator shall be included in the specification. For liquid-cooled units, the type of coolant, rate of flow, and the inlet coolant temperature range shall be specified. In addition, the coolant shall be of such composition so as not to be injurious to the material used in the heat exchanger or ferroresonant regulator. Any abnormal environmental conditions (such as dust and salt spray) shall be specified.

5.1.2 Storage

Unless otherwise specified, the ferroresonant regulator shall be capable of withstanding prolonged storage in a temperature range from –40 °C to 60 °C, relative humidity range from 5% to 90%, and altitude from 0 m to 2000 m (7000 ft) above sea level.

The above conditions shall not degrade the operational performance when restored to normal operating conditions.

5.1.3 Shipment

Unless otherwise specified, the ferroresonant regulator shall withstand shipment in temperatures from –55 °C to 60 °C, relative humidity from 5% to 95%, and altitudes from 0 m to 12 000 m (40 000 ft) above sea level.

5.2 Mechanical

The unit shall meet all the dimensional requirements of the specification. Where required, each component of the ferroresonant regulator shall have a mounting means of sufficient strength in proportion to its size and weight. The unit shall be durable enough to withstand normal handling in shipment and installation without sustaining physical damage or changes in electrical performance. Unless otherwise specified, the magnetic unit shall have an impregnation process to help reduce audible noise and temperature rise, and provide a protective finish on the outside of the unit.

Copyright © 1999 IEEE. All rights reserved.
Copyright The Institute of Electrical and Electronics Engineers, Inc.
Provided by IHS under license with IEEE
No reproduction or networking permitted without license from IHS
Not for Resale

6. Ratings

6.1 Input rating

6.1.1 Input voltage rating

Unless otherwise stated in the specification, the ferroresonant regulator shall operate with the specified nominal input voltage of ±10%. With special considerations, output voltage regulation can be maintained for larger symmetrical or unsymmetrical variations of the nominal input voltage. The ferroresonant regulator can be made to operate with either sine-wave or square-wave input voltages. Unless a square-wave voltage is specified, a sine-wave voltage of less than 5% harmonic distortion shall be assumed.

The ferroresonant regulator can be made to operate with two or more nominal input voltages by using more than one primary winding or a tapped winding, or both.

6.1.2 Input current rating

The input current is dependent on the output power, the efficiency of the ferroresonant transformer, the input power factor of the ferroresonant regulator, and the input voltage. When the input voltage is increased gradually from zero, the input current will increase in a somewhat linear manner until the input voltage becomes high enough to establish the ferroresonant condition. At that input voltage, the input current is maximum and will then decrease as the input voltage continues to be increased until the input current reaches the reversal point. Further increase in the input voltage results in magnetic saturation of the primary portion of the core. If this occurs, the input current increases very rapidly. When the ferroresonant regulator is operated at full rated load and within the specified range of input voltage, the input current at high line voltage will usually be less than that at low line voltage.

6.1.3 Input frequency rating

The basic ferroresonant regulator is frequency sensitive and the output voltage varies in proportion to the frequency change. For this reason, the nominal frequency and frequency variation of the alternating-current input are important parts of the specification and rating. The ferroresonant regulator can, by taps or other special means, be made to operate from more than one frequency, for example, 50 Hz and 60 Hz.

Controlled ferroresonant regulators are generally insensitive to input frequency variations. However, the nominal frequency, or frequencies, and the frequency variations are still an important part of the specification and rating.

6.2 Output rating

6.2.1 Output voltage rating

The output voltage (or voltages) shall be included in the ratings of the unit. Since the purpose of the ferroresonant regulator is to provide an essentially constant output voltage, all of the usual or common factors that determine how well the output voltage can be maintained should be considered and included in the ratings. Seven considerations account for the output voltage variation of the ferroresonant regulator. These include the following:

a) Input voltage variation
b) Input frequency variation
c) Load change
d) Load power factor change

Copyright © 1999 IEEE. All rights reserved.

Copyright The Institute of Electrical and Electronics Engineers, Inc.
Provided by IHS under license with IEEE
No reproduction or networking permitted without license from IHS
Not for Resale

e) Operating ambient temperature change
f) Temperature drift (warm-up) of the ferroresonant transformer
g) Manufacturing and setting tolerances required by the manufacturer

The output-voltage wave shape of a basic ferroresonant regulator is nonsinusoidal, contains odd harmonics, and approaches a square wave in appearance. The output-voltage wave shape changes when the input voltage changes and is typically more sinusoidal at low input voltage and more square wave at high input voltage. Special techniques using filters or harmonic neutralizing windings can be used to provide a satisfactory sine-wave output waveform when required (see Clause 4).

6.2.2 Output current rating

The output current is an important part of the rating for a ferroresonant regulator and shall be specified. Used with the output voltage rating, the rated current determines the power that can be delivered and this relates to the size, weight, cost, and efficiency of the unit. The minimum current shall also be included in the specification because the change of the output current from rated load to minimum load accounts for the load regulation of the output voltage. If overload or short-circuit current, or both, must be limited, they shall be specified (see Figure 9 and Figure 10).

Unless otherwise specified, the output load is assumed to be unity power factor. If the load is one with leading or lagging power factor, the power factor and its variation shall be specified (see 4.1.4).

6.3 Resonant section rating

6.3.1 Resonant voltage rating

The voltage rating of the resonant winding shall be determined by the manufacturer of the ferroresonant transformer, unless otherwise specified.

6.3.2 Resonant capacitor rating

The capacitance and its tolerance, as well as the voltage rating of the capacitor, shall be determined by the manufacturer of the ferroresonant transformer, unless otherwise specified. The selection of capacitor is usually made by the manufacturer because the capacitance, capacitor voltage, output power, amount of input voltage variation, and output voltage regulation are all interrelated factors in the design and operation of the ferroresonant regulator.

The selection of the capacitor shall take into account the temperature capabilities specified by the capacitor manufacturer in relation to the operating ambient temperature and voltage derating and life desired.

6.4 Thermal rating

6.4.1 Rating

All materials used in the construction of the ferroresonant transformer shall be compatible with the insulation class required for the maximum ambient temperature plus the temperature rise to be allowed and shall be determined by the manufacturer unless otherwise specified. Thermocouples or change of resistance methods, or both, outlined in the test procedures shall be used to determine operating temperatures. Typical temperature classifications of ferroresonant transformers are Class 130, Class 155, and Class 180. Recognition from Underwriters Laboratories, Inc., may be obtained for these and higher temperature systems for ferroresonant transformers in the same manner as for conventional transformers.

--`,,`-`-`,,`,,`,`,,`---
Copyright © 1999 IEEE. All rights reserved.
Copyright The Institute of Electrical and Electronics Engineers, Inc.
Provided by IHS under license with IEEE
No reproduction or networking permitted without license from IHS
Not for Resale

6.5 Electric strength

6.5.1 Dielectric strength

The dielectric strength of a ferroresonant transformer is a measure of its ability to withstand a voltage between each winding and all other windings, cores, and shields. The dielectric strength test shall be performed as specified in 8.1.1.

6.5.2 Induced voltage strength

The induced voltage strength of a ferroresonant transformer is a measure of its ability to withstand a voltage between any adjacent turns and layers. The induced voltage strength test shall be performed as specified in 8.1.2.

6.6 Magnetic radiation

The stray flux or magnetic radiation of the ferroresonant regulator is higher and has a higher harmonic content than that of a conventional transformer because of the higher flux density in the core. If the ferroresonant regulator is operated where this characteristic is of consequence for proper system operation, the acceptable level of magnetic radiation shall become part of the specification. The place of measurement, frequency of interest, and distance from the unit shall be specified since the magnetic radiation varies considerably over the surfaces of the core and coil assembly.

6.7 Acoustic noise

Acoustic noise emanates from all magnetic components of ferroresonant regulators; this factor should be given adequate attention during the preparation of procurement specifications and during the design of the ferroresonant regulator.

The noise developed by ferroresonant regulators can cause physical discomfort and annoyance if the sound levels are too high.

Office environments usually require sound levels less than 45 dB[6] while many industrial environments can tolerate noise levels exceeding 55 dB[5]. Achieving lower sound levels requires extra attention to the following:

a) Mechanical design (the shape and configuration of the core, as well as the method of clamping).
b) Magnetic design (flux densities and the amount of core operated at high densities).
c) Type of impregnation system.
d) Type of enclosure. Consideration should be given to the type of material used and its thickness, so that the enclosure decreases the external noise originally produced rather than causes an increase in noise.

The ferroresonant regulator should be tested in its final enclosure. Where this is not practical, it should be tested while on a surface that will not cause undo amplification.

If acoustic noise is critical, the procurement specification should specify the maximum noise and describe test conditions. The acoustic noise test shall be performed as specified in 8.8.

[6]Reference 20μN/m^2 (0.0002 μbar).

Copyright © 1999 IEEE. All rights reserved.

Copyright The Institute of Electrical and Electronics Engineers, Inc.
Provided by IHS under license with IEEE
No reproduction or networking permitted without license from IHS
Not for Resale

6.8 Corona

Corona is a partial or continuous discharge of electrical energy due to gaseous ionizations in voids, microvoids, or space surrounding terminations, which manifests itself at elevated voltage gradients, the threshold level being referred to as the corona inception voltage. This phenomenon is injurious to the surrounding insulation material, causing accelerated aging and leading to dielectric failure and breakdown, due principally to localized heating, chemical decomposition, and mechanical branching or treeing.

While dielectric materials vary widely in their inherent ability to withstand this ionic bombardment, the rate of damage is principally a function of the ratio of the applied voltage to the corona inception voltage. The corona inception voltage is lower at elevated temperature and at higher altitude. This inception voltage across the insulation and series air void is known to be a function of the internal gas pressure, dielectric constant, and thickness of the insulator. For electric fields perpendicular to the insulator, the stress in the gas (air) in volts per mil is equal to the stress in the insulation multiplied by its dielectric constant. The material with the lowest dielectric constant will have the highest volt per mil stress. The approximate threshold level is usually 40 V/mil to 100 V/mil (using metric unit V/mm, the threshold level is 1600 V/mm to 4000 V/mm) of the applied voltage. Care must be taken to allow no corona to be present under the worst-case operating voltage, although it may be present under overvoltage short-time test conditions.

7. Nameplate and other markings

Each ferroresonant voltage regulator shall be furnished with a nameplate to enable the user to identify the device and to properly connect to the power source and loads.

7.1 Nameplate

The nameplate shall be a metal plate, adhesive label, ink stamp, or other suitable type that cannot be readily removed. The nameplate shall be applied to the ferroresonant transformer, mounting bracket, or enclosure.

7.2 Nameplate information

7.2.1 Minimum nameplate information

The minimum information on the nameplate shall be the manufacturer’s name or identification and part number. Under special circumstances, the user’s name or identification and part number may be substituted.

7.2.2 Additional nameplate information

At the discretion of the user or manufacturer, or both, of the ferroresonant regulator, some or all of the following rating information may be included on the nameplate:

a) Input frequency or frequency range
b) Input voltage range
c) Input watts or voltamperes
d) Input current
e) Output voltage
f) Output current
g) Output watts or voltamperes
h) Maximum or minimum ambient temperature, or both
i) Schematic or connection information
j) Maximum working voltage
k) Resonant capacitor information

Copyright © 1999 IEEE. All rights reserved.
Copyright The Institute of Electrical and Electronics Engineers, Inc.
Provided by IHS under license with IEEE
No reproduction or networking permitted without license from IHS
Not for Resale

7.3 Termination markings

Termination markings shall be by means of numbers, letters, color codes, specific designations such as primary, or other suitable means.

8. Test procedures

8.1 Electric strength tests

(Disconnect the resonating capacitor.) The tests described below apply, unless otherwise specified.

8.1.1 Dielectric strength test

This test applies to insulation between windings, between windings and core, and between windings and case.

NOTE—Transformer windings with graded insulation or windings internally or externally grounded or operated at direct voltages to ground with one terminal effectively at ground shall be tested by the induced method (see 8.1.2).

The transformer shall withstand a sinusoidal test voltage applied for a period of 1 min between each winding and all other windings and, when applicable, the core or case. The test frequency shall be 60 Hz or an alternative frequency agreed on between the manufacturer and user. See item e) below.

The terminations of the winding under test shall be connected together and the terminals of all other windings shall be grounded and, when applicable, connected to the core or case.

a) Transformer windings operating at a peak working voltage of 25 V and above shall have a 60 Hz root-mean-square test voltage equal to twice the root-mean-square working voltage plus 1000 V applied between each winding and each other winding and the core or case. All windings not under test shall be grounded to the core or case.
b) For transformer windings operating at a peak working voltage below 25 V, the test applied shall be 500 V root-mean-square, 60 Hz or the equivalent.
c) Test voltages shall be increased gradually (at the rate of 2 kV/s, maximum) from zero to the specified value, maintained for a period of 1 min, and decreased to zero at the same rate.
d) Since the application of test voltages may impair the strength of the transformer insulation, any dielectric strength test shall, if repeated, be made at not more than 90% of the specified test potential.
e) As an alternate test to item a) and item b), a higher test voltage may be applied for a shorter period of time, as agreed between manufacturer and user.

8.1.2 Induced voltage strength test

This test primarily applies to insulation between layers of windings and between adjacent turns of windings.

The transformer shall withstand across the highest voltage winding, an alternating voltage equal to twice the operating root-mean-square alternating voltage, at a frequency at least equal to three times the rated frequency for a period of at least 10 s.

With graded insulation, winding terminations normally grounded shall be grounded during the test. Where a direct voltage is specified between low end terminations and ground, twice the value of direct voltage shall be applied during this test.

--`,,`-`-`,,`,,`,`,,`---
Copyright © 1999 IEEE. All rights reserved.

Copyright The Institute of Electrical and Electronics Engineers, Inc.
Provided by IHS under license with IEEE
No reproduction or networking permitted without license from IHS
Not for Resale

8.1.3 Insulation resistance test

The dc insulation resistance shall be measured between each winding and all other windings and (when applicable) the core or case. The measured value shall be greater than a specified minimum value in megohms.

a) The measurement shall be made with a dc test voltage of 50 V to 500 V applied to, but not to exceed, the peak electric-strength test voltage. The test voltage shall be applied for at least 10 s before the insulation resistance measurement is made.

b) The terminations of the winding under test shall be connected together and the terminations of all other windings shall be grounded and (when applicable) connected to the core or case.

c) The insulation resistance measurement shall be made at normal room temperature and at a relative humidity not greater than 80%.

8.1.4 Corona tests

Corona tests shall be in accordance with IEEE Std 389-1979 (see 5.4).

8.2 Input characteristic (resonating capacitor connected) tests

8.2.1 No-load characteristic

8.2.1.1 Input losses and current at no-Load

Rated voltage at rated frequency is applied to the primary windings, with the secondary windings open circuited. The no-load input power and root-mean-square current are measured.

8.2.1.2 Alternate test

As an alternate test, the test described in 8.2.1.1 may be performed with the resonating capacitor disconnected.

8.2.2 Load characteristic

8.2.2.1 Input power and current

Rated voltage at rated frequency is applied to the primary windings, with the secondary windings at rated load. The input root-mean-square current and power are measured.

8.2.2.2 Inrush current

Rated voltage at rated frequency is applied to the primary windings, with the secondary windings at rated load. Measure the peak input current at initial turn on using an oscilloscope and recording the display on film. The test should be repeated 20 times so that the worst case (residual flux and input magnetizing flux are additive) is found. Synchronizing circuits may be used to ensure the worst turn-on condition with proper preconditioning. See IEEE Std 389-1979.

8.2.2.3 Input power factor

This test shall be performed (when specified) by measuring the watts and amperes input at nominal input voltage and rated load.

Copyright © 1999 IEEE. All rights reserved.
Copyright The Institute of Electrical and Electronics Engineers, Inc.
Provided by IHS under license with IEEE
No reproduction or networking permitted without license from IHS
Not for Resale

$$\text{power factor} = \frac{\text{watts input}}{\text{voltamperes input}} \quad (1)$$

Input power factor at other load and input voltage conditions may also be specified.

8.2.2.4 Jump resonance points

The jump resonance points are determined by measuring the input root-mean-square current over the input voltage range of zero to maximum specified input voltage, and noting the input voltage at which the current suddenly changes on ascending or descending voltage (see Figure 8 and Figure 11).

8.2.2.5 Efficiency

This test shall be performed (when specified) by measuring the watts input at nominal input voltage with rated load currents applied and computing the efficiency by using Equation (2).

$$\%\ \text{efficiency} = \frac{\text{watts output}}{\text{watts input}} \times 100 \quad (2)$$

where

watts output = total output power (including that used by bleeders, if involved)

8.3 Output characteristics

8.3.1 Unstable operation

The output voltage instability is generally determined by monitoring the input current or output voltage with suitable means to detect random or periodic fluctuations at other than the fundamental frequency. The test should be conducted over the full range of input and output conditions.

8.3.2 Total harmonic distortion

The harmonic content in the output alternating-voltage waveshape may be determined by measuring the fundamental voltage, the individual harmonic voltages, and using Equation (3).

$$\%\ \text{total harmonic distortion (thd)} = 100 \times \left(\frac{\text{sum of squares of amplitude of all harmonics}}{\text{square of amplitude of fundamental}}\right)^{0.5} \quad (3)$$

8.3.3 Full-load output voltage

With the regulator output terminations connected to suitable load impedances directly or through rectifiers, if applicable (so as to establish rated secondary load currents), and the resonant winding connected to an ac capacitor within the tolerance specified, nominal input voltages shall be applied at the specified nominal frequency and the voltage of each output shall be measured. All voltages shall be measured with a true root-mean-square meter except for rectified outputs. These shall be measured with an averaging direct-type meter unless otherwise specified.

8.3.4 Crest factor

Using suitable means to measure the true rms value and peak value of the output voltage, the crest factor is determined as in Equation (4).

Copyright © 1999 IEEE. All rights reserved.

Copyright The Institute of Electrical and Electronics Engineers, Inc.
Provided by IHS under license with IEEE
No reproduction or networking permitted without license from IHS
Not for Resale

$$\text{crest factor} = \frac{\text{peak value}}{\text{rms value}} \quad (4)$$

8.3.5 Regulation

a) Monitor the output voltage and current with suitable measuring apparatus while the affecting factors such as input line voltage, input line frequency, load current, load power factor, and temperature are varied over their specified ranges. When specified, other effects such as overshoot, undershoot, and ripple may be included in the regulation band limits.

b) In certain applications, dynamic loading, including step changes and pulse loading, are specified. In determining the total regulation these factors should be considered.

c) The accuracy of the measuring apparatus should be chosen to ensure a reasonable limit of error.

d) The regulation can be determined for individual affecting factors and for combined affecting factors to find the total regulation band. See 3.11.

e) Individual outputs for multiple-output ferroresonant voltage regulators are measured separately but shall include loading interaction effects when specified.

8.4 Overload characteristics

8.4.1 Short-circuit current

This test shall be performed (when specified) at maximum rated input voltage and nominal frequency by measuring the ac or dc output current when the output is short circuited through an appropriate ammeter. It is necessary to minimize the total short-circuit impedance.

8.4.2 Maximum overload current

This test shall be performed (when specified) at maximum rated input voltage and nominal frequency by measuring the ac or dc output current, whichever applies, as the load resistance is varied from maximum rated current to short-circuit current and noting the maximum current obtained. See Figure 9 and Figure 10. Note that the maximum overload current may be greater than the short-circuit current.

8.5 Transient excursions (overshoot and undershoot)

Transient excursions of the output voltage due to turn-on, turn-off, or load-step functions may be measured by suitable means to determine the extent of any such excursions. The worst-case conditions of transient causing factors should be used.

8.6 Temperature rise

8.6.1 Transformer temperature rise

This test is normally made with the maximum rated input voltage and nominal frequency on the input connection that has the highest primary conductor loss. The regulator output terminations shall be connected as described in 8.3.3.

a) Unless otherwise specified, the regulator shall be tested with its mounting surface on a wooden bench or the equivalent, and protected from drafts of air, heat radiation from the loads, or other heat sources.

Copyright © 1999 IEEE. All rights reserved.
Copyright The Institute of Electrical and Electronics Engineers, Inc.
Provided by IHS under license with IEEE
No reproduction or networking permitted without license from IHS
Not for Resale

b) The regulator shall be operated until thermal stability is obtained. Thermal stability is defined as three readings of transformer core, transformer winding, or transformer case temperature taken at 30 min intervals that are within a range of ±1 °C.

c) The maximum temperature rise may be determined by the change in resistance method or by the use of thermocouples.

To determine the temperature rise by the change in resistance method, see Equation 51 of IEEE Std 389-1979.

8.6.2 Temperature of resonating capacitors

Temperature ratings of ac capacitors are usually based on applied 60 Hz sinusoidal voltage. Voltages applied to resonating capacitors in ferroresonant regulator circuits contain harmonics and therefore, capacitor temperature rises will be higher than tests made with the same root-mean-square sinusoidal voltage applied. Capacitor case temperatures are usually measured by thermocouples to determine that the manufacturer's temperature limits and the maximum allowed case temperature rise are not exceeded.

8.7 External flux field

The flux field emanating from a ferroresonant regulator can be measured by a high-impedance detector (±10 MΩ input impedance) and a magnetic search coil, or with a Hall effect-type gaussmeter. (See IEEE Std 389-1979.)

8.8 Audible sound-level tests

Ferroresonant regulators are often required to meet specified noise levels. Noise-level tests should be conducted with the regulator operating under its normal circuit conditions and in a room suitable for making measurements, as described in ANSI S1.2-1962.

8.8.1 Test conditions for audible noise

The transformers shall be mounted in an enclosure having a sound level at least 4 dB, and preferably 7 dB or more, lower than the sound level of the transformer and the ambient combined. The ambient sound level shall be the average of the measurements taken immediately before and immediately after the transformer is tested at each of the locations as indicated in 8.8.2, item b). Corrections shall be applied in accordance with Table 1.

The enclosure should be free of any noise-reflecting surface. Whenever possible, the transformer should be bolted on the chassis or other mechanical structure on which it is to be permanently mounted during operation.

8.8.2 Measurements of audible noise

a) Sound levels shall be measured with an instrument that is in accordance with ANSI S1.4-1983. Response curve *A* (for 40 dB sound level) shall be used.

b) Measurements shall be taken with the probe of the sound-level meter located not more than 30 cm from the surface being measured. The readings shall be taken at the center of each of the vertical planes of the transformer and at the center of the top horizontal plane.

c) The average sound level is defined as the arithmetic mean of the sound levels measured according to item b).

--`,,`-`-`,,`,,`,`,,`---
Copyright © 1999 IEEE. All rights reserved.

Copyright The Institute of Electrical and Electronics Engineers, Inc.
Provided by IHS under license with IEEE
No reproduction or networking permitted without license from IHS
Not for Resale

Table 1—Sound-level corrections for noise tests

Difference between sound level of transformer and ambient combined and sound level of ambient (dB)	Correction to be applied to sound level of transformer and ambient combined to obtain sound level of transformer (dB)
4	–2.2
5	–1.7
6	–1.3
7	–1.0
8	–0.8
9	–0.6
10	–0.4
Over 10	–0.0

8.8.3 Installation and operation

The regulator should be installed and operated in accordance with the following.

8.8.3.1 Installation

The ferroresonant regulator should be placed on a resilient surface such as a rubber pad or hair mat.

8.8.3.2 Operation

The regulator under test should be electrically loaded and have input voltage applied in accordance with specified parameters. If load and live test conditions for noise measurements are not specified, the regulator should be operated at the minimum rated load and with the highest rated line voltage. Since noise is generally greater when the regulator is operating at its fully stabilized temperature, the noise test measurements should be made at this condition.

8.9 Polarity

Ferroresonant regulators are sometimes required to be operated using multiphase, parallel, or series connections. When they are operated with such connections, it is necessary that all of the regulators have the same polarity between their inputs and their outputs.

Usually it is safe to assume that all units of a particular model produced by a given manufacturer have the same polarity, be it additive or subtractive. If this is always true, units can, for example, be paralleled by connecting like marked terminals together on both input and output sides, and connecting the bank to the source and load. If the manufacturer has for some reason not marked all coil ends in the same manner (to ensure proper phasing), very undesirable results can occur when they are energized and loaded.

Winding polarity (that is, between input and output) shall, if needed, be determined by comparing the voltages of the windings when connected in series aiding and in series opposing.

Copyright © 1999 IEEE. All rights reserved.
Copyright The Institute of Electrical and Electronics Engineers, Inc.
Provided by IHS under license with IEEE
No reproduction or networking permitted without license from IHS
Not for Resale

When the terminals or leads are not marked to indicate polarity, and when polarity information is needed, it can be determined by comparing the voltages of the winding when connected in series. Figure 20 illustrates additive polarity where the voltmeter will read the approximate sum of input and output voltages.

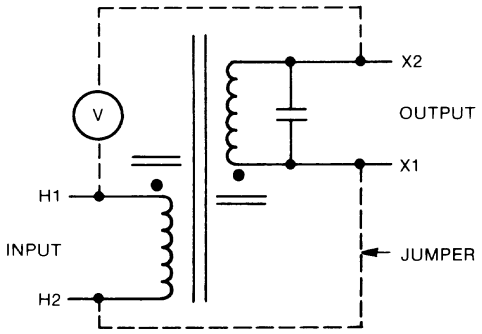

Figure 20—Additive polarity (if X1 and X2 are reversed, the polarity is subtractive)

9. Application guide

9.1 Introduction

The ferroresonant regulator is a low-cost static device that has a durable and rugged construction and is very reliable when compared to other types of voltage regulators. The simplest type of ferroresonant regulator has a quasi-rectangular waveform of output voltage.

The ferroresonant regulator provides an essentially constant output voltage when the alternating input voltage changes. A typical design can provide for output voltage regulation of approximately ±1% while the input voltage varies ±15%, operating at a given load and line frequency.

The single-output ferroresonant regulator has the advantage of inherent short-circuit protection or limitation of current. Short-circuit current is typically limited to approximately 200% of rated output current and the regulator will recover to normal operation when the overload or short circuit is removed. For multiple output types of ferroresonant regulators, some outputs may need fusing since any one output represents only a partial load on the regulator.

The average output voltage is calculated from Equation (5).

$$E\,(\text{av}) = 4\,BANf \times 10^{-4} \tag{5}$$

where

B is the saturation flux density of the magnetic material in tesla
A is the effective cross-sectional area of the winding core, cm^2
N is the number of output turns
f is the frequency of the supply voltage, Hz

From Equation (5) it can be seen that ferroresonant regulators are limited to applications where the frequency of the supply voltage is substantially constant.

Copyright © 1999 IEEE. All rights reserved.

Copyright The Institute of Electrical and Electronics Engineers, Inc.
Provided by IHS under license with IEEE
No reproduction or networking permitted without license from IHS
Not for Resale

The output voltage of the ferroresonant regulator is affected by changes of the supply frequency, load, and load power factor. Since the effects of these variations are normally undesirable, several types of ferroresonant regulators have been developed to compensate for such changes.

9.2 Shunt-type ferroresonant regulators

The shunt-type ferroresonant regulator shown in Figure 4 is the most commonly used version of the ferroresonant regulator. It consists of the following two types:

a) Common type of Figure 4 (open loop)
b) Controlled type of Figure 3 (closed loop)

Some advantages, disadvantages, and typical applications of each type follow.

9.2.1 Open-loop ferroresonant regulators

9.2.1.1 Advantages

Some of the advantages of the open-loop ferroresonant regulator are as follows:

a) The FIT rate[7] of the magnetic component is in the order of 30, and the capacitor can also be chosen to have a low FIT rate, which gives a regulator with long life expectancy.
b) The output wave form closely resembles a square wave, rendering it excellent for rectification and filtering.
c) Modifications can be made using a neutralizing winding or other filtering means to provide a sinusoidal output wave form.
d) The output has inherent short-circuit protection limiting the current to a range of 130% to 200% of the full-load current.
e) The regulator has inherent input transient and electrical noise suppression to limit the effects of lightning strikes or other high-frequency disturbances. This is partially due to the physical separation of the primary and secondary windings, resulting in low stray capacitance between them, and also partially due to the low-pass filter characteristic of the regulator.
f) High-input power factors (over 90% at full load) can easily be achieved.
g) Rectified output voltages can be regulated to within ±5% corresponding to both line variations of ±10% and load changes of minimum to maximum load. Regulation for ±15% line variations is typically less than ±1%. Wider regulation tolerances can be expected if the required output voltages are low (for example, 5 V).
h) Efficiencies varying from 80% to 90% can be expected depending on the power rating, that is, 80% for 100 W and 90% for 10 000 W.
i) For input voltage changes within the specified range, the output response time is characteristically one cycle.

9.2.1.2 Disadvantages

Some of the disadvantages are as follows:

a) Output voltage varies as a function of input frequency unless a frequency-compensating network is used.
b) Efficiencies of ferroresonant regulators are lower than those of linear transformers.
c) The physical size and weight of a ferroresonant transformer is somewhat larger than a linear transformer of comparable rating.
d) The audible noise of a ferroresonant regulator is somewhat greater than that for a linear transformer.

[7] FIT = One failure per 10^9 device-hours.

Copyright © 1999 IEEE. All rights reserved.
Copyright The Institute of Electrical and Electronics Engineers, Inc.
Provided by IHS under license with IEEE
No reproduction or networking permitted without license from IHS
Not for Resale

9.2.1.3 Typical applications

Ferroresonant regulators are commonly used where regulated dc or ac voltages, or both, are required for any of the following:

a) Computer and peripheral equipment
b) Communication equipment
c) Laboratory applications
d) Battery chargers and eliminators
e) Lamps
f) Inverters
g) Telephone ringers
h) Television sets and other appliances
i) Office machines

9.2.2 Closed-loop (controlled) ferroresonant regulators

Controlled ferroresonant regulators are similar to the open-loop regulators except that output regulation is attained by simulated saturation of the core. This is accomplished by switching an inductor across the output winding with a semiconductor switch, that is, a transistor-, triac-, or silicon-controlled rectifier, or a magnetic component.

The output voltage is given by Equation (5). However, the flux density of the output-winding core is held to a value below the saturation flux density of the core material. The flux density is varied with a feedback-control circuit in order to keep the output voltage essentially constant, independent of specified load or line variations and changes in frequency and temperature.

9.2.2.1 Advantages

Some advantages of the closed-loop ferroresonant regulators are as follows:

a) Output voltage variation of ±0.5% is easily attainable for specified load, line, frequency, and temperature changes.
b) The efficiency is higher compared to that of the open-loop regulator.
c) In some inverter applications the output voltage can be controlled by varying the frequency of the inverter.

9.2.2.2 Disadvantages

Some of the disadvantages are as follows:

a) The addition of the control circuitry increases the size and cost, and reduces the reliability as compared to the open-loop regulator.
b) The design is more complex.

9.2.2.3 Typical applications

Closed-loop controlled ferroresonant regulators are commonly found in the following:

a) Power systems that require a closely regulated output voltage with an input frequency variation typically of ±5%.
b) Applications listed under open-loop regulators, but where increased efficiency and improved output voltage regulations are required.

Copyright © 1999 IEEE. All rights reserved.

Copyright The Institute of Electrical and Electronics Engineers, Inc.
Provided by IHS under license with IEEE
No reproduction or networking permitted without license from IHS
Not for Resale

9.3 Specific applications

9.3.1 Ferroresonant regulator for battery charger

A ferroresonant regulator, when specially designed and followed by rectifiers, provides an ideal battery charger from the standpoint of inherent limitation of current, automatic tapered charging rate, and final charge. This regulator protects the battery from excessive current at start of charge and end of charge. The inherent current-limiting function also protects the transformer and rectifiers when inadvertent shorting of the output occurs.

Another advantage of ferroresonant transformers is that very little noise and distortion are fed back into the power source by a ferroresonant regulator as compared to a phase-controlled regulator.

9.3.2 Ferroresonant regulator—multiple operation

Ferroresonant regulators can be connected in various combinations to increase output voltampere capability, to adapt regulators, to supply sources, and to obtain various output characteristics. It is recommended as standard practice that the units involved be all of the same type, rating, and manufacturer. The proper winding polarities must be observed in making all connections to the regulators.

9.3.2.1 Single-phase operation to increase voltampere capability

Because of the thermal and physical size limitations, which are inherent, it is often necessary to increase voltampere capability by paralleling two or more separate ferroresonant regulators. For example, three 2.5 kVA regulators would have their inputs and outputs paralleled to obtain 7.5 kVA single-phase capability. The paralleled regulators must meet the criteria set in 9.3.2 in order to minimize possibilities of circulating currents, caused by slight differences in regulators. Typically, regulation characteristics of such regulator combinations are comparable to any one of the single regulators used in this combination.

9.3.2.2 Single-phase operation to increase output voltage

Two or more equally rated ferroresonant regulators can be operated with their output windings connected in series to obtain higher output voltage. Primary windings of such regulators shall be connected in parallel.

9.3.2.3 Three-phase operation (three wire)

Three separate, equally rated ferroresonant regulators can be used for three-phase operation. Primary windings in this system must be connected in delta, but output windings can be connected to their loads in two different ways, as described below.

A schematic for three-phase operation with separate loads for each phase is shown in Figure 21.

With equal loads applied to each phase, this system regulates well, while unbalanced loads will cause uneven output phase shifting and increased circulating currents in the delta-connected primaries.

A schematic for three-phase operation with loads connected in a four-wire wye system is shown in Figure 22.

This system with balanced phase loads regulates similar to the system described above, but with unbalanced loads regulation of this system is relatively better.

Copyright © 1999 IEEE. All rights reserved.
Copyright The Institute of Electrical and Electronics Engineers, Inc.
Provided by IHS under license with IEEE
No reproduction or networking permitted without license from IHS
Not for Resale

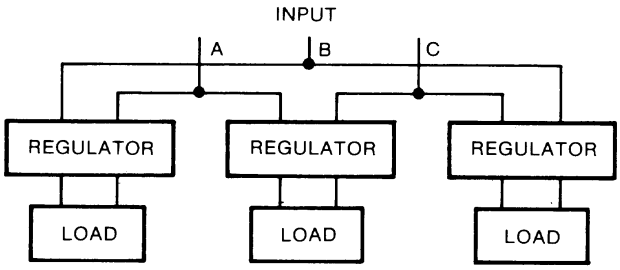

Figure 21—Isolated single-phase loads

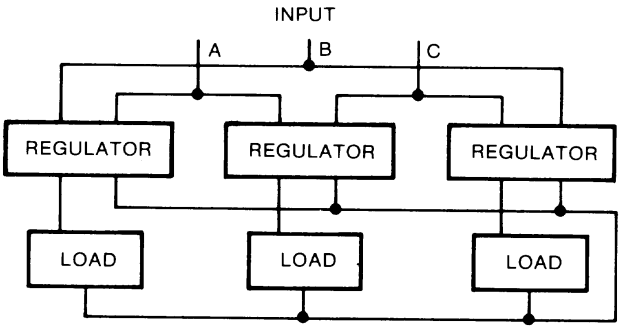

Figure 22—Separate single-phase loads connected in a four-wire wye

9.3.3 Controlled ferroresonant or synchronous (closed-loop) regulator

This inverter regulator can be used in applications where better regulation is required than can be obtained with an open-loop ferroresonant regulator. The principle of operation is similar to the open-loop ferroresonant regulator except that the resonant capacitor current is supplied electronically. The electronic control of that current provides a feedback loop which results in better output regulation for changes in input voltage, input frequency, output load, and temperature. Typical output voltage regulation of ±1% can be obtained with ±15% input voltage change, ±5% input frequency change, 0% to 100% load change, temperature drift (warm-up), and ±25 °C ambient change.

The output waveform is rectangular and therefore very suitable for rectification and filtering in dc applications.

This type of regulator can also be used in applications that require an adjustable output voltage. The output voltage is readily adjustable within practical limits of approximately ±10% of nominal output voltage settings.

In addition, this regulator does not require operation at sufficiently high flux density to saturate the core. Therefore, the regulator may be used in some applications where audible noise, core losses, or magnetic radiation of an open-loop ferroresonant regulator are objectionable.

Copyright © 1999 IEEE. All rights reserved.

Copyright The Institute of Electrical and Electronics Engineers, Inc.
Provided by IHS under license with IEEE
No reproduction or networking permitted without license from IHS
Not for Resale

Choke input filters can be used, resulting in a considerable reduction in size and cost of the filter network when high dc currents are required. This is in addition to the reduction of filters as a result of the rectangular output waveform.

The two disadvantages listed for the closed-loop regulator apply here also (see 9.2.2.2).

9.3.4 Ferroresonant regulators for operation from multiple inputs

In some applications, such as uninterruptible power sources, it is necessary to operate a ferroresonant regulator from two isolated, independent inputs. Both inputs and the output are isolated from one another by magnetic shunts. The power flow to the output is controlled by varying the phase relationship of each input voltage relative to the output. This scheme is usually used in conjunction with a harmonic filter and sometimes with a controlled ferroresonant regulator.

A common approach is to apply commercial ac power to input 1 and the output of a battery-powered push-pull inverter to input 2 (see Figure 23). Under normal conditions, the commercial ac source provides power to the load. During loss of commercial ac, the battery provides power to the load via the inverter and input 2. During brown-out conditions the power delivered to the load can be shared between the commercial ac source and the battery source. The inverter can be designed for bilateral power flow; that is, the battery can provide power to the load via the inverter or the battery can be charged via the inverter from the commercial ac source.

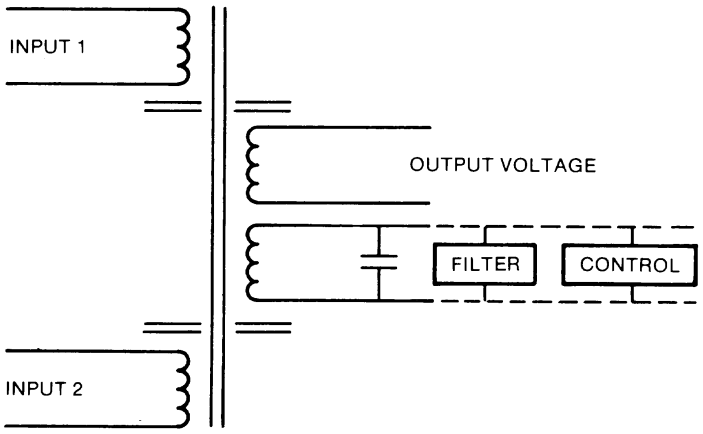

Figure 23—Ferroresonant regulator with multiple inputs

9.3.5 Ferroresonant regulators at higher frequencies

For the purpose of providing voltage regulation, ferroresonant regulators are sometimes used at frequencies greater than 60 Hz. Care has to be exercised, however, as acoustic noise and core heating increase with frequency.

Where the choice of frequency is flexible, a good compromise is 180 Hz. At this frequency, heating in core materials is not excessive, acoustic noise is still on the lower end of the audio range of the human ear, and some component size reduction is achieved.

Some applications of ferroresonant regulators at frequencies such as 400 Hz to 30 kHz have been made, but in general are limited to smaller voltampere ratings.

Copyright © 1999 IEEE. All rights reserved.
Copyright The Institute of Electrical and Electronics Engineers, Inc.
Provided by IHS under license with IEEE
No reproduction or networking permitted without license from IHS
Not for Resale

9.3.6 Magnetically coupled tuned regulator (MCTR)

The MCTR is comprised of the following components, as shown in Figure 24.

1) Primary coil
2) Secondary, harmonic, and resonating coil
3) Linearity shunt
4) MCTR shunt

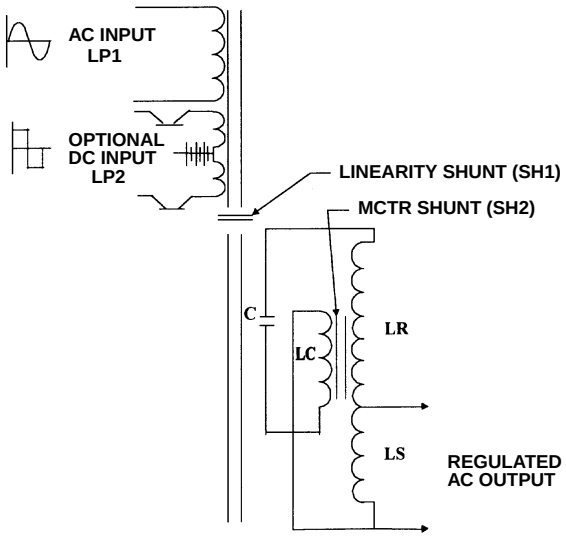

Figure 24—Schematic of a magnetically coupled tuned regulator

The harmonic compensating coil is placed over the secondary/resonating coil and the two coils are separated by the MCTR shunt. The main function of the MCTR shunt is to provide leakage reactance to the secondary circuit that can eliminate odd harmonics and improve output distortion, while minimizing the inrush current which is generated by some loads.

The linearity shunt is placed between the input and output coils as is shown in Figure 25. This shunt consists of two different gaps. The small gap provides more overload capability. This means the output voltage will not collapse under overload conditions up to as much as 250% of nominal. The winding configuration of the transformer is shown in Figure 26.

10. Maintenance guide

The basic ferroresonant regulator consists of only the following two static parts:

a) Ferroresonant transformer
b) Capacitor

In normal operation, no maintenance is required.

Copyright © 1999 IEEE. All rights reserved.

Copyright The Institute of Electrical and Electronics Engineers, Inc.
Provided by IHS under license with IEEE
No reproduction or networking permitted without license from IHS
Not for Resale

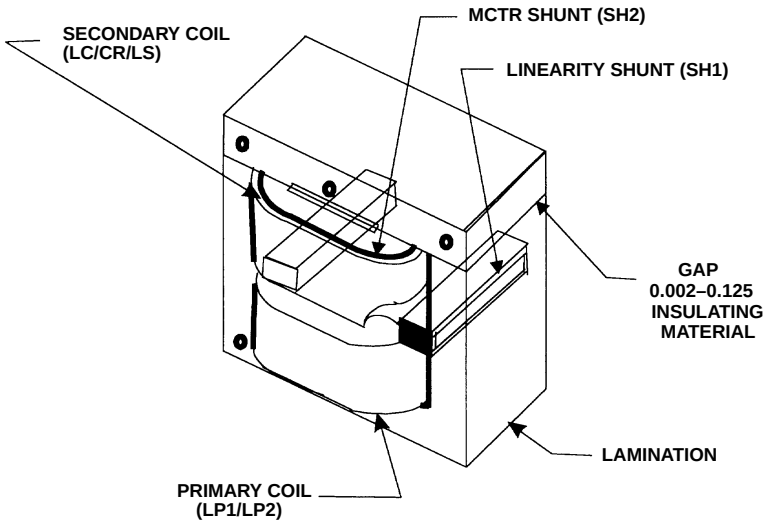

Figure 25—MCTR Transformer

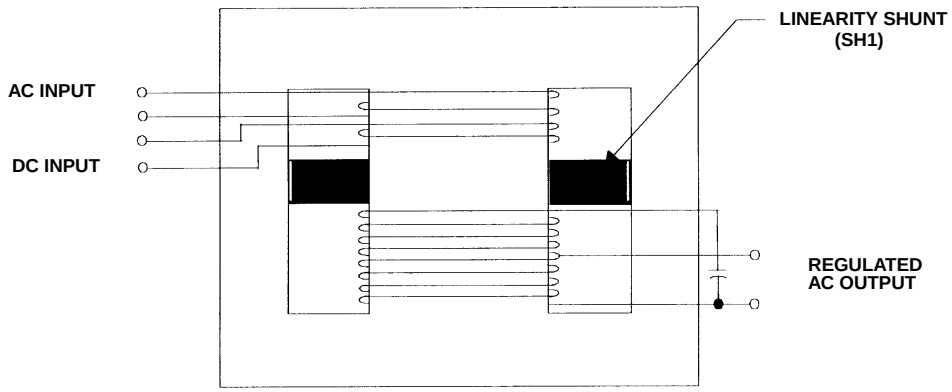

Figure 26—Transformer winding configuration

Copyright © 1999 IEEE. All rights reserved.
Copyright The Institute of Electrical and Electronics Engineers, Inc.
Provided by IHS under license with IEEE
No reproduction or networking permitted without license from IHS
Not for Resale

11. Bibliography

[B1] Finzi, L., and Lavi, A., "The controlled ferroresonant transformer," *AIEE Transactions*, vol. 18, pp. 414–419, Jan. 1963.

[B2] Gerdes, et al., "A practical approach to understanding ferroresonance," *Circuit Design Engineering*, Apr. 1966.

[B3] Harada, K., and Murta, K. "Ferroresonant converters with high-frequency drive," *IEEE PESC 83*, pp. 355–359.

[B4] Hart, H. P., and Kakalec, R. J., "The derivation and application of design equations for ferroresonant voltage regulators and rectifiers," *IEEE Transactions on Magnetics*, vol. MAG-7, no. 3, pp. 205–211, Sept. 1971.

[B5] Hunter, P. L., "Variable flux-reset ferroresonant voltage regulator," *IEEE Transactions on Magnetics*, vol. MAG-7, no. 3, pp. 564–567, Sept. 1971.

[B6] Kakalec, R. J., "A feedback controlled ferroresonant voltage regulator," *IEEE Transactions on Magnetics*, vol. MAG-6, no. 1, pp. 4–8, Mar. 1970.

[B7] Keef, "Static-magnetic regulator solves transient voltage problem," *Canadian Electronics Engineering*, Aug. 1960.

[B8] Lindena, S., "Design of a magnetic voltage stabilizer," *Electrotechnology*, May 1961.

[B9] Lord, H. W., "Analog equivalent circuit aided design of ferroresonant transformers and circuits," *IEEE Transactions on Magnetics*, vol. MAG-13, no. 5, pp. 1293–1298, Sept. 1977.

[B10] Peters, D., and Maka, T., "An analytical procedure for determining equivalent circuits of static electromagnetic devices," *IEEE Transactions on Industrial and General Applications*, vol. IGA-2, No. 6, pp. 456–460, Nov. 1966.

[B11] Randall, R. H., Archer, W. A., and Lewis, R. M., "A new controlled constant voltage transformer," *IEEE Transactions on Magnetics*, vol. MAG-7, no. 3, pp. 567–571, Sept. 1971.

[B12] Walk, R., Kakalec, R. J., and Rootenberg, J., "An analytic and computer study of the jump phenomenon in ferroresonance regulators," *IEEE Transactions on Magnetics*, vol. MAG-7, no. 3, pp. 574–577, Sept. 1971.

Copyright © 1999 IEEE. All rights reserved.

Copyright The Institute of Electrical and Electronics Engineers, Inc.
Provided by IHS under license with IEEE
No reproduction or networking permitted without license from IHS
Not for Resale