IEEE Standards

IEEE Std 421.4™-2004
(Revision of
IEEE Std 421.4-1990)

421.4™

IEEE Guide for the Preparation of Excitation System Specifications

IEEE Power Engineering Society

Sponsored by the
Energy Development and Power Generation Committee

IEEE

3 Park Avenue, New York, NY 10016-5997, USA

22 November 2004

Print: SH95244
PDF: SS95244

Copyright The Institute of Electrical and Electronics Engineers, Inc.
Provided by IHS under license with IEEE
No reproduction or networking permitted without license from IHS

Not for Resale

IEEE Std 421.4™-2004
(Revision of
IEEE Std 421.4-1990)

IEEE Guide for the Preparation of Excitation System Specifications

Sponsor

Energy Development and Power Generation Committee
of the
IEEE Power Engineering Society

Approved 24 June 2004

IEEE-SA Standards Board

Abstract: This guide is intended to provide to the specification writer the information to prepare a specification for the purchase of an excitation system. This guide is presented in narrative form with descriptions of functions typical of excitation systems. Narrative is provided describing types of excitation systems and information required for sizing the excitation system.
Keywords: communications, compound exciters, digital, excitation guide, exciter types, potential, integral, derivative (PID), potential source exciters, power system stabilizers, redundant controllers, rotating exciters

---

The Institute of Electrical and Electronics Engineers, Inc.
3 Park Avenue, New York, NY 10016-5997, USA

Copyright © 2004 by the Institute of Electrical and Electronics Engineers, Inc.
All rights reserved. Published 22 November 2004. Printed in the United States of America.

IEEE is a registered trademark in the U.S. Patent & Trademark Office, owned by the Institute of Electrical and Electronics Engineers, Incorporated.

Print: ISBN 0-7381-4108-9 SH95244
PDF: ISBN 0-7381-4109-7 SS95244

No part of this publication may be reproduced in any form, in an electronic retrieval system or otherwise, without the prior written permission of the publisher.

Copyright The Institute of Electrical and Electronics Engineers, Inc.
Provided by IHS under license with IEEE
No reproduction or networking permitted without license from IHS
Not for Resale

IEEE Standards documents are developed within the IEEE Societies and the Standards Coordinating Committees of the IEEE Standards Association (IEEE-SA) Standards Board. The IEEE develops its standards through a consensus development process, approved by the American National Standards Institute, which brings together volunteers representing varied viewpoints and interests to achieve the final product. Volunteers are not necessarily members of the Institute and serve without compensation. While the IEEE administers the process and establishes rules to promote fairness in the consensus development process, the IEEE does not independently evaluate, test, or verify the accuracy of any of the information contained in its standards.

Use of an IEEE Standard is wholly voluntary. The IEEE disclaims liability for any personal injury, property or other damage, of any nature whatsoever, whether special, indirect, consequential, or compensatory, directly or indirectly resulting from the publication, use of, or reliance upon this, or any other IEEE Standard document.

The IEEE does not warrant or represent the accuracy or content of the material contained herein, and expressly disclaims any express or implied warranty, including any implied warranty of merchantability or fitness for a specific purpose, or that the use of the material contained herein is free from patent infringement. IEEE Standards documents are supplied "**AS IS**."

The existence of an IEEE Standard does not imply that there are no other ways to produce, test, measure, purchase, market, or provide other goods and services related to the scope of the IEEE Standard. Furthermore, the viewpoint expressed at the time a standard is approved and issued is subject to change brought about through developments in the state of the art and comments received from users of the standard. Every IEEE Standard is subjected to review at least every five years for revision or reaffirmation. When a document is more than five years old and has not been reaffirmed, it is reasonable to conclude that its contents, although still of some value, do not wholly reflect the present state of the art. Users are cautioned to check to determine that they have the latest edition of any IEEE Standard.

In publishing and making this document available, the IEEE is not suggesting or rendering professional or other services for, or on behalf of, any person or entity. Nor is the IEEE undertaking to perform any duty owed by any other person or entity to another. Any person utilizing this, and any other IEEE Standards document, should rely upon the advice of a competent professional in determining the exercise of reasonable care in any given circumstances.

Interpretations: Occasionally questions may arise regarding the meaning of portions of standards as they relate to specific applications. When the need for interpretations is brought to the attention of IEEE, the Institute will initiate action to prepare appropriate responses. Since IEEE Standards represent a consensus of concerned interests, it is important to ensure that any interpretation has also received the concurrence of a balance of interests. For this reason, IEEE and the members of its societies and Standards Coordinating Committees are not able to provide an instant response to interpretation requests except in those cases where the matter has previously received formal consideration. At lectures, symposia, seminars, or educational courses, an individual presenting information on IEEE standards shall make it clear that his or her views should be considered the personal views of that individual rather than the formal position, explanation, or interpretation of the IEEE.

Comments for revision of IEEE Standards are welcome from any interested party, regardless of membership affiliation with IEEE. Suggestions for changes in documents should be in the form of a proposed change of text, together with appropriate supporting comments. Comments on standards and requests for interpretations should be addressed to:

Secretary, IEEE-SA Standards Board

445 Hoes Lane

P.O. Box 1331

Piscataway, NJ 08855-1331USA

NOTE—Attention is called to the possibility that implementation of this standard may require use of subject matter covered by patent rights. By publication of this standard, no position is taken with respect to the existence or validity of any patent rights in connection therewith. The IEEE shall not be responsible for identifying patents for which a license may be required by an IEEE standard or for conducting inquiries into the legal validity or scope of those patents that are brought to its attention.

Authorization to photocopy portions of any individual standard for internal or personal use is granted by the Institute of Electrical and Electronics Engineers, Inc., provided that the appropriate fee is paid to Copyright Clearance Center. To arrange for payment of licensing fee, please contact Copyright Clearance Center, Customer Service, 222 Rosewood Drive, Danvers, MA 01923 USA; +1 978 750 8400. Permission to photocopy portions of any individual standard for educational classroom use can also be obtained through the Copyright Clearance Center.

Copyright The Institute of Electrical and Electronics Engineers, Inc.
Provided by IHS under license with IEEE
No reproduction or networking permitted without license from IHS
Not for Resale

Introduction

(This introduction is not part of IEEE Std 421.4-2004, IEEE Guide for the Preparation of Excitation System Specifications.)

This guide is intended as resource material for writers preparing a specification for procurement of an excitation system for a synchronous machine. It is intended that IEEE Std 421.1™-1986, IEEE Std 421.2™-1990, IEEE Std 421.3™-1997, and IEEE Std 421.5™-1992 be used in conjunction with this guide in preparing the specification. This guide is not intended to be a fill-in-the-blanks guide but a narrative description of items and functions that should be considered in preparing excitation system specifications. Some of the information presented in this guide may be unnecessary for the writer's particular specification. One should judge the applicability of information to be included in the writer's specification and remove all inapplicable portions. Some tutorial material is included for the user who may be relatively inexperienced in selecting parameters and requirements for each particular application.

It should also be noted that this document defines an excitation control system as one that includes the synchronous machine. The definition is included here for clarity as the term is not defined in IEEE Std 421.1-1986; however, it is included in IEEE 100, *The Authoritative Dictionary of IEEE Standards Terms*, Seventh Edition.

Suggestions for improvement of this specification guide are welcomed. They should be sent to the Secretary, IEEE Standards Board Institute of Electrical and Electronics Engineers, 445 Hoes Lane, Piscataway, NJ 08855, USA.

Notice to users

Errata

Errata, if any, for this and all other standards can be accessed at the following URL: http://standards.ieee.org/reading/ieee/updates/errata/index.html. Users are encouraged to check this URL for errata periodically.

Interpretations

Current interpretations can be accessed at the following URL: http://standards.ieee.org/reading/ieee/interp/index.html.

Patents

Attention is called to the possibility that implementation of this standard may require use of subject matter covered by patent rights. By publication of this standard, no position is taken with respect to the existence or validity of any patent rights in connection therewith. The IEEE shall not be responsible for identifying patents or patent applications for which a license may be required to implement an IEEE standard or for conducting inquiries into the legal validity or scope of those patents that are brought to its attention.

Copyright © 2004 IEEE. All rights reserved.

Copyright The Institute of Electrical and Electronics Engineers, Inc.
Provided by IHS under license with IEEE
No reproduction or networking permitted without license from IHS
Not for Resale

Participants

The following is a list of participants in the Excitation Systems Subcommittee Working Group.

Richard C. Schaefer, *Chair*

J. C. Agee
M. J. Basler
R. Beaulieu
R. Berube
K. Bollinger
S. Corsi
M. L.Crenshaw
M. Coultes
T. W. Eberly
G. Girgis
A. Godhwani
L. Hajagos
J. D. Hurley
R. A. Lawson
J. F. Luini
Om P. Malik
Charles R. Mummert
A. Murdoch
L. Nettleton
Manfred Reimann
L. Rodland
R. Rusch
A. W. Schneider, Jr.
P. Smulders
L. Wall

The following members of the individual balloting committee voted on this guide. Balloters may have voted for approval, disapproval, or abstention.

J. C. Agee
Thomas Blair
Steven Brockschink
Tommy Cooper
Gary Engmann
Robert Fenton
William G. Fossey
Robert Grondin
Randall Groves
Edward Horgan, Jr.
Richard Huber
David Jackson
David Kornegay
Prabha Kundur
Lisardo Lourido
Gregory Luri
Om P. Malik
Thomas McCaffrey
Paul Micale
James Michalec
Gary Michel
Charles Morse
Charles R. Mummert
Arun Narang
Shawn Patterson
Paul Pillitteri
Manfred Reimann
James Ruggieri
Robert Rusch
Surya Santoso
Richard Schaefer
A. W. Schneider, Jr.
S. Thamilarasan
Gerald Vaughn
Zhenxue Xu

When the IEEE-SA Standards Board approved this guide on 24 June 2004, it had the following membership:

Don Wright, *Chair*
Steve M. Mills, *Vice Chair*
Judith Gorman, *Secretary*

Chuck Adams
H. Stephen Berger
Mark D. Bowman
Joseph A. Bruder
Bob Davis
Roberto de Boisson
Julian Forster*
Arnold M. Greenspan
Mark S. Halpin
Raymond Hapeman
Richard J. Holleman
Richard H. Hulett
Lowell G. Johnson
Joseph L. Koepfinger*
Hermann Koch
Thomas J. McGean
Daleep C. Mohla
Paul Nikolich
T. W. Olsen
Ronald C. Petersen
Gary S. Robinson
Frank Stone
Malcolm V. Thaden
Doug Topping
Joe D. Watson

*Member Emeritus

Also included are the following nonvoting IEEE-SA Standards Board liaisons:

Satish K. Aggarwal, *NRC Representative*
Richard DeBlasio, *DOE Representative*
Alan Cookson, *NIST Representative*

Savoula Amanatidis
IEEE Standards Managing Editor

--`,,,`,,,-`-`,,`,,`,`,,`---
Copyright © 2004 IEEE. All rights reserved.
Copyright The Institute of Electrical and Electronics Engineers, Inc.
Provided by IHS under license with IEEE
No reproduction or networking permitted without license from IHS
Not for Resale

Contents

1. Overview 1

2. References 2

3. Definitions 2

4. Introduction 3

4.1 Basics 3
4.2 Operating models 4
4.3 Installation 4
4.4 Conventions 4
4.5 Insulation systems 4
4.6 Diodes and thyristors 4
4.7 Availability 5
4.8 Redundancy of equipment 5
4.9 Spare parts 6

5. Exciter rating considerations 7

5.1 General 7
5.2 Steady-state ratings 7
5.3 Transient requirements 8

6. Exciter type and power source considerations 9

6.1 General 9
6.2 Operation parameters 10
6.3 Excitation systems for rotating exciters 10
6.4 Rotating dc generator-commutator exciters 11
6.5 Rotating ac exciters 11
6.6 Static exciters 11

7. Excitation system performance measures and synchronous machine regulator considerations 13

7.1 Manual control performance 14
7.2 Automatic control performance (including the synchronous machine) 14
7.3 Auxiliary control functions 17

8. Control considerations 21

8.1 De-excitation 21
8.2 Unit manual control 21
8.3 Unit automatic control 22
8.4 Unit automatic start/stop 22
8.5 Unit automatic voltage matching 22
8.6 Setpoint adjusters 22
8.7 Setpoint tracking 23
8.8 Control circuit interface to power plant circuits 23
8.9 Data logging 24
8.10 Communication interface for digital excitation systems 24

Copyright © 2004 IEEE. All rights reserved.

Copyright The Institute of Electrical and Electronics Engineers, Inc.
Provided by IHS under license with IEEE
No reproduction or networking permitted without license from IHS
Not for Resale

9. Protection considerations 24

9.1 General requirements 24
9.2 Protective action 24
9.3 Annunciation action 24

10. Environmental and enclosure considerations 25

10.1 Environmental 25
10.2 Enclosure 25
10.3 Instruments and controls for remote mounting 26

11. Information to be provided by the manufacturer 26

11.1 General requirements 26
11.2 Information that may be provided at the time of submission of proposals 27
11.3 Information provided prior to delivery of the equipment 27
11.4 Information to be provided with equipment when it is delivered 27
11.5 Photographs 27
11.6 Drawing review procedure during project stage 28
11.7 Drawing review after commissioning is completed 28

12. Equipment tests 28

12.1 Excitation control equipment factory tests 28
12.2 DC commutator exciter 29
12.3 Alternator-rectifier exciter 29
12.4 Potential source-rectifier exciter 30
12.5 Controlled rectifier assembly factory test 31
12.6 Compound source-rectifier exciter 31
12.7 Field tests 33

Annex A (informative) AC–DC power converters 35

Annex B (informative) Excitation questionnaire 36

Copyright © 2004 IEEE. All rights reserved.

Copyright The Institute of Electrical and Electronics Engineers, Inc.
Provided by IHS under license with IEEE
No reproduction or networking permitted without license from IHS
Not for Resale

IEEE Guide for the Preparation of Excitation System Specifications

1. Overview

This guide is intended to provide to the specification writer the necessary material for preparing a specification for the procurement of an excitation system for a synchronous machine. The information presented in this guide is given in narrative form with the descriptions and functions of particular items that should be examined in preparing the specifications. Some information presented in this guide may be inapplicable for a specific excitation system application, and it may be omitted in the writer's specification.

The term *excitation control system* is used throughout this guide. An excitation control system is a feedback control system that includes the synchronous machine and its excitation system. Figure 1 contains a block diagram of an excitation control system. An excitation system is the equipment providing field current for a synchronous machine, including all power, regulating, control, and protective elements. An exciter is the equipment that provides the field current for the excitation of a synchronous machine. A synchronous machine regulator couples the output variables of the synchronous machine to the input of the exciter through feedback and forward controlling elements for the purpose of regulating the synchronous machine output variables (see IEEE Std 421.1™-1986).[1] The influence of the power system upon the operation of the excitation control system must be considered when the synchronous machine is connected to the utility grid.

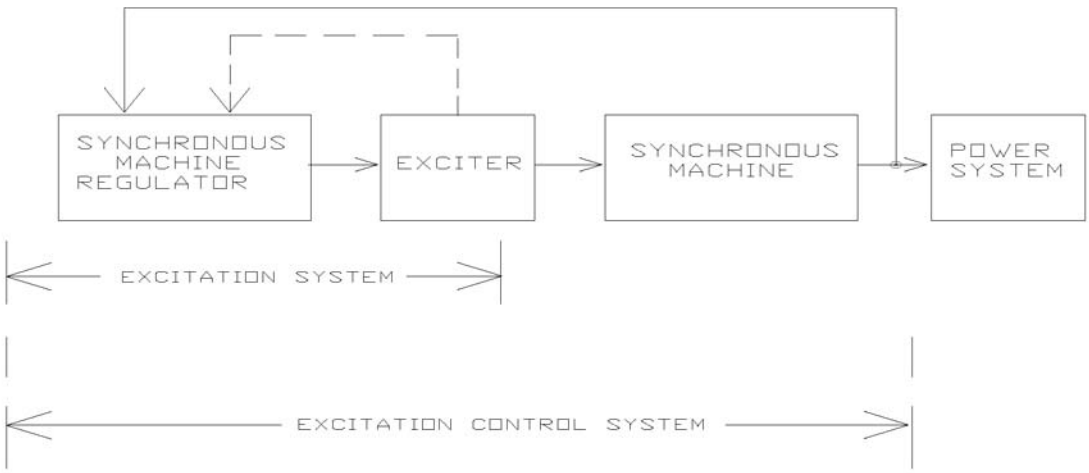

Figure 1—Block diagram of the components of an excitation control system

[1]Information on references can be found in Clause 2.

Copyright © 2004 IEEE. All rights reserved.

Copyright The Institute of Electrical and Electronics Engineers, Inc.
Provided by IHS under license with IEEE
No reproduction or networking permitted without license from IHS
Not for Resale

2. References

This guide shall be used in conjunction with the following publications. When the following specifications are superseded by an approved revision, the revision shall apply.

ANSI C50.12-1982 (Reaff 1989), American Standard Requirements for Salient-Pole Synchronous Generators and Generators/Motors for Hydraulic Turbine Applications.[2]

ANSI C50.13-1989, American Standard Requirements for Cylindrical-Rotor Synchronous Generators.

IEEE Std 421.1-1986, IEEE Standard Definitions for Excitation Systems for Synchronous Machines.[3, 4]

IEEE Std 421.2™-1990, IEEE Guide for Identification, Testing, and Evaluation of the Dynamic Performance of Excitation Control Systems.

IEEE Std 421.3™-1997, IEEE Standard for High-Potential Test Requirements for Excitation Systems for Synchronous Machines.

IEEE Std 421.5™-1992, IEEE Recommended Practice for Excitation System Models for Power System Stability Studies.

IEEE Std C37.18™-1979 (Reaff 2003), IEEE Standard Enclosed Field Discharge Circuit Breakers for Rotating Electric Machinery.

IEEE Std C57.12.00™-2000, IEEE Standard General Requirements for Liquid-Immersed Distribution, Power, and Regulating Transformers.

IEEE Std C57.12.91™-2001, IEEE Standard Test Code for Dry-Type Distribution and Power Transformers.

3. Definitions

For the purposes of this guide, the following terms and definitions apply. *The Authoritative Dictionary of IEEE Standards Terms*, Seventh Edition, should be referenced for terms not defined in this clause.

3.1 digital excitation system: A common nomenclature for describing an excitation system for a synchronous machine where some, if not all, of the functionality is implemented in a digital processor. As a minimum, the automatic voltage regulator (AVR) control function would be expected to be implemented digitally in such a system. It is likely that the limiter functions and optional var/power factor (pf) or power system stabilizer (PSS) controls are also implemented in the same digital-based control.

3.2 excitation control system: The feedback control system that includes the synchronous machine and its excitation system. The term is used to distinguish the performance of the synchronous machine and excitation system in conjunction with the power system from that of the excitation system alone.

3.3 excitation system: The equipment providing field current for a synchronous machine, including all power, regulating, control, and protective elements.

[2]ANSI publications are available from the Sales Department, American National Standards Institute, 25 West 43rd Street, 4th Floor, New York, NY 10036, USA (http://www.ansi.org/).

[3]The IEEE standards or products referred to in this clause are trademarks of the Institute of Electrical and Electronics Engineers, Inc.

[4]IEEE publications are available from the Institute of Electrical and Electronics Engineers, Inc., 445 Hoes Lane, Piscataway, NJ 08854, USA (http://standards.ieee.org/).

Copyright © 2004 IEEE. All rights reserved.
Copyright The Institute of Electrical and Electronics Engineers, Inc.
Provided by IHS under license with IEEE
No reproduction or networking permitted without license from IHS
Not for Resale

3.4 excitation system stabilizer: A function that serves to modify the voltage regulator forward signal by either series or feedback compensation to improve the dynamic performance of the excitation control system.

3.5 exciter: The equipment that provides the field current for the excitation of a synchronous machine.

3.6 line drop compensator: A function that modifies the machine terminal voltage to compensate for the impedance drop to a fixed point in the external network.

3.7 power system stabilizer (PSS): A function that provides an additional input to the voltage regulator to improve the damping of power system oscillations.

NOTE—A number of different quantities may be used as input to the power system stabilizer, such as shaft speed, frequency, electric power, and so on, or a combination of these signals.[5]

3.8 reactive droop compensator: A function that causes a reduction of terminal voltage proportional to reactive current. It is generally used to obtain reactive current sharing among synchronous machines operating in parallel.

3.9 reactive differential compensator: A function used to obtain reactive current sharing among synchronous machines operating in parallel without causing reduction of terminal voltage. It requires interconnection of voltage regulators or current transformers of the machines.

3.10 synchronous machine regulator: A general term applied to a regulator that couples the output variables of a synchronous machine to control the exciter output through forward and feedback elements for the purpose of regulating the synchronous machine output variables.

3.11 voltage regulation accuracy: The band or zone, expressed in percent of the rated value of the regulated voltage, within which the excitation system will hold the regulated voltage of the synchronous machine during steady or gradually changing conditions, in the absence of the action of any compensators or limiters. Unless otherwise specified, the range will be assumed from no-load to rated kilovoltampere and power factor.

4. Introduction

This guide applies to excitation systems using rotating and static exciters. In many cases, equipment maintenance, associated with the older excitation systems, and obsolescence of parts may make maintainability cumbersome and involved. Today, many older excitation systems such as rotating or pilot exciter type are being replaced with new solid state excitation systems to improve or simplify the operation and control of the synchronous machine. New excitation systems can enhance the performance of the synchronous machine by eliminating deadbands and delays inherent in older type excitation systems.

4.1 Basics

The primary function of an excitation system is to provide the field current required by a synchronous machine to meet a specified range of power system operating conditions. In addition to fulfilling this requirement, there are a number of other factors that should be considered when writing specifications for an excitation system. Power system stability studies have been found to be useful in identifying dynamic performance requirements. These performance evaluations help establish the required response characteristics and may identify the need for other control functions, e.g., a power system stabilizer. Modern excitation systems may include various auxiliary control elements and protective devices in addition to a

[5]Notes in text, tables, and figures are given for information only and do not contain requirements needed to implement the guide.

Copyright © 2004 IEEE. All rights reserved.

Copyright The Institute of Electrical and Electronics Engineers, Inc.
Provided by IHS under license with IEEE
No reproduction or networking permitted without license from IHS
Not for Resale

basic voltage regulator. The specification should functionally identify all auxiliary excitation control equipment (compensators, limiters, power system stabilizers, etc.) and protective equipment (volts/Hertz protection, overexcitation protection, etc.), which are to be included in the excitation system.

The specification should include items relevant to the excitation system design even though they do not directly affect the performance of the voltage regulation task. To assist the manufacturer in identifying applicable standards and possible design constraints, a description of the type of installation should be included, i.e., nuclear, fossil fueled, hydro turbine, and so on.

4.2 Operating models

An important consideration in the design of an excitation system is the identification of the operating mode or modes of the plant. The specification should clearly state all possible modes of operation, i.e., generation, pumped storage, synchronous condenser, and so on. The most severe duty cycle expected for each possible mode should be provided. In addition, the specification should indicate any requirements for unattended operation, i.e., automatic startup, remote operation, and so on.

4.3 Installation

The specification for an excitation system should clearly state whether the excitation control equipment is to be used as an outdoor or as an indoor installation. Special storage requirements for the system before installation should be included in the specification, as well as special handling and shipping instructions. If there is a preferred method of shipping, it should be stated in addition to all known minimum clearances and maximum weight limitations. In addition, the specifications should state the capacity and availability of cranes at the installation site.

4.4 Conventions

The specification for an excitation system should reference any desired conventions and applicable standards for the system. It should include copies of all local laws and codes that apply to the design, construction, and installation. Any desired units of measurement should be stated, and the appropriate language, appropriate standard and form of media information (drawings, manuals, etc.) as stipulated in Clause 11 should be provided. The specification may also define to what extent, if any, the excitation system should contain design, assembly, subsystems, parts, labor, and so on, of domestic origin.

4.5 Insulation systems

The specification for a rotating excitation system should specify an insulation system that meets Class B, Class F, or Class H systems defined in ANSI C50.12-1982 and ANSI C50.13-1989. Withstand of the dielectric tests in IEEE Std 421.3-1997 should be included.

4.6 Diodes and thyristors

For diodes and thyristors, a voltage rating equal to a multiple (not necessarily integer) of rated root mean square (rms) input voltage should be specified, e.g., three times the rms input voltage to the rectifier bridge. In critical applications, devices in series, each with a full withstand rating, may be specified.

Copyright © 2004 IEEE. All rights reserved.
Copyright The Institute of Electrical and Electronics Engineers, Inc.
Provided by IHS under license with IEEE
No reproduction or networking permitted without license from IHS
Not for Resale

4.7 Availability

Availability is defined to be the fraction of time that a system is available for service. It can be found by taking the ratio of the time the system is available for service to the total time. The reliability and maintainability of the excitation system should be compatible with the required reliability and service of the unit. Some units require maximum availability. In such applications, the use of redundant elements should be considered. In extremely critical applications, the specification writer may wish to establish associated excitation system requirements such as *mean time to repair* (MTTR), *mean time between failures* (MTBF), and *mean time to failure* (MTTF). If that unit or plant has more scheduling flexibility, the consequences of a failure and its associated cost may not justify the establishment and specification of MTTR, MTBF, and MTTF.

4.8 Redundancy of equipment

In systems where reserves of machine/system capacity is available and machine startup cost is low, the failure of an excitation device and lost generation may not compromise the required generation needed to support the system load. For these systems, repair can often be made in a timely fashion to return the machine back to operation without the complexity and cost of redundant excitation equipment. In other cases, the loss of generation capacity or other economic factors may be significant. The need for equipment redundancy is often associated with minimum downtime requirement and the critical importance of the generation for the system load. Varying degrees of redundancy in the excitation system are often available.

Some of the approaches used to increase the security of online generation in the event of a problem involving the excitation system are described in 4.8.1–4.8.6.

4.8.1 Manual control as a backup

Today, manual control is used as a commissioning tool to assist startup of the excitation system or a means to maintain excitation in the event of loss of a fuse in the instrument transformers used for voltage regulator sensing. This feature is a standard function in most excitation systems. Where backup is required, it is best to use redundant excitation controllers, which includes the voltage regulator. See 4.8.2.

Manual control provides the means to maintain excitation to the field of the generator as an alternative control to the automatic voltage regulator. Transfer to manual is performed either automatically or manually.

In some systems, a transfer to manual control automatically occurs in the event of a system abnormality such as a blown fuse in the instrument transformer circuit to the voltage regulator. Protective functions may be used to monitor the operating parameters of the system to determine the transfer. Where automatic transfer to manuals is used, a tracking scheme is recommended if bumpless transfer is required.

4.8.2 Redundant automatic voltage regulator

A redundant voltage regulator provides the means to maintain voltage regulation of the generator in the event of an internal voltage regulator component failure. Redundancy can be in the form of a standby voltage regulator monitoring the primary voltage regulator. If a detectable failure occurs, a transfer to the standby voltage regulator results.

In some systems, the redundant voltage regulator can be continuously operating. When a detectable failure occurs with one of the operating voltage regulators, the defective unit will be tripped by a monitoring system used to determine which voltage regulator is defective. The redundant voltage regulator system may include, for example, manual control, under/overexcitation limiting, and a power system stabilizer.

--`,,,`,,,`-`-`,,`,,`,`,,`---
Copyright © 2004 IEEE. All rights reserved.

Copyright The Institute of Electrical and Electronics Engineers, Inc.
Provided by IHS under license with IEEE
No reproduction or networking permitted without license from IHS
Not for Resale

Isolating hardware may be specified in some applications to provide a means to repair the defective components while the excitation system remains in service.

4.8.3 Power rectifier bridge redundancy

A fault in a power rectifier bridge may result in a loss of capability and possible overload of the excitation power components. Two approaches are commonly used to maintain online operation:

a) Two separate bridges with transfer to the redundant bridge. Redundant coolers should also be considered to ensure adequate cooling.

b) Three or more parallel rectifier bridges of which at least one is redundant. Redundant coolers should also be considered to ensure adequate cooling.

4.8.4 Online maintenance of power rectifier bridge

Online maintenance for redundant power rectifiers may further increase availability of the system. This feature allows trained electrical technicians to physically isolate the defective rectifier bridge and repair the excitation system while the unit continues to operate.

4.8.5 Redundant static excitation systems

Another type of exciter redundancy is a fully redundant static excitation system consisting of a complete duplication of the electronic control circuits, including limiters, transducers, and power system stabilizers as required, as well as two sets of voltage transformers (VTs) and current transformers (CTs). The control electronics are duplicated all the way to the firing pulse generation circuits for the static bridges. Sensing circuits cause a transfer at the firing pulse output for failures in any part of the controlling channel. The following schemes have been used to implement redundant static excitation systems:

a) Two or more thyristor bridges where any one or more may be faulty at any time and still allow continuous rated field current output. There is only one exciter power transformer.

b) Two complete static exciters with forced current sharing where either of which may be faulty at any time while allowing continuous rated field current output. The two static exciters are fed from separate power transformers, which in turn are fed from separate buses, for complete redundancy.

4.8.6 Other redundant features

More complex excitation systems may incorporate multiple features in the redundant scheme. Some of these features may include

a) Firing circuit.

b) Power supplies.

c) Input devices (VTs, CTs).

d) Sensing (measuring devices).

e) Communication ports.

f) Power rectifier bridge (see 5.2).

g) Triple modular redundant (2 of 3 voting). The user should specify which parts of the excitation system must be capable of being isolated, disconnected, and repaired while the system is operating.

4.9 Spare parts

An adequate number of spare parts should be kept in stock to support the expected availability. Prospective suppliers may be contacted for recommendations prior to writing of the specifications. The inclusion of spare parts in the bidding process needs special attention so that all bidders will be evaluated consistently.

Copyright © 2004 IEEE. All rights reserved.
Copyright The Institute of Electrical and Electronics Engineers, Inc.
Provided by IHS under license with IEEE
No reproduction or networking permitted without license from IHS Not for Resale

5. Exciter rating considerations

5.1 General

All parameters that affect the rating of the excitation system should be coordinated and unambiguously specified, because the rating determines the cost of the major components. The writer is cautioned to specify a rating only once and avoid having conflicting information in other clauses of the specification. Some parameters refer to steady-state operation and others to transient operation. When the excitation system and synchronous machine are ordered at the same time from the same manufacturer, many of the design parameters are automatically coordinated and need not be specified in as much detail as when equipment is ordered from different suppliers.

5.2 Steady-state ratings

5.2.1 Rated current

The continuous current rating should be specified to equal or exceed the maximum required by the synchronous machine field under any allowed continuous operating conditions. Note that some machines have a continuous overload rating. In addition, ANSI C50.12-1982, and ANSI C50.13-1989, allow all machines to operate at rated megavolt ampere and within ±5% of rated terminal voltage. Some machines may require an even wider operating range. The need for off-nominal frequency operation, especially in hydro, should also be considered in establishing the rating. Some machines, such as combustion-turbine-drive units, have a variable rating depending on ambient air temperature. The excitation system for these machines may require a variable rating based on ambient air temperature.

Some excitation systems may require a small continuous negative current rating when the machine is operated as a synchronous condenser. The negative field current allows a slightly greater transmission line charging capability. The negative current was relatively easily supplied from commutator-type exciters, with little additional complexity. Exciters employing solid-state rectifiers do not normally have inherent capability for negative currents, but they can be obtained with some complexity. Most static excitation systems can develop a transient negative voltage to force the decay of field current toward zero. This process should not be confused with the concept of a continuous negative current rating, which is previously mentioned.

For exciters that are specified with redundant current paths or cooling elements, the continuous rating should apply with the redundant parts out of service. The exciter efficiency and losses should be measured at the rated current and voltage point with all redundant parts in service because this is the normal operating mode.

5.2.2 Rated continuous voltage

The continuous voltage rating of an excitation system should be such that the voltage is sufficient to supply the necessary continuous current to the synchronous machine field, with the field at its maximum temperature under rated load conditions. In addition, the continuous voltage capability should allow operation of the synchronous machine at rated MVA and within ±5% of rated terminal voltage unless otherwise specified. In determining the required voltage for the continuous as well as the transient ratings mentioned later, all voltage drops up to the field winding terminals should be considered. Any brush drop voltage should be considered part of the synchronous machine field circuit.

Copyright © 2004 IEEE. All rights reserved.

Copyright The Institute of Electrical and Electronics Engineers, Inc.
Provided by IHS under license with IEEE
No reproduction or networking permitted without license from IHS
Not for Resale

5.2.3 Power rectifier ratings

Life expectancy of the power rectifier bridge is affected by multiple factors. These include

a) Ambient operating temperature of the equipment

b) Rectifier power capacity versus rated load field requirements

c) Transient surge protection and/or peak reverse voltage rating of power semiconductors

Greater operating margin versus actual design capacity will provide a favorable improvement toward longer equipment life. To avoid overloading and to ensure adequate power for the field with failed or impaired power rectifier bridges, power bridge and/or cooling redundancy is provided.

5.2.4 Power bridge rating margin

Where additional operating margin is desired, a bridge rectifier can be selected that has higher operating capacity versus actual operating load. This selection takes into consideration possible uprating of future machine capacity. For these cases, the power potential transformer kilovoltampere rating must also be considered for the higher operating margin.

5.3 Transient requirements

5.3.1 Ceiling current

Low ceiling voltage exciters, normally less than 150% of rated value, can usually be allowed to attain their ultimate ceiling current. Where high ceiling voltages are employed for improved transient performance, the ceiling current, if unrestricted, may reach high values and require excessive exciter capacity. Inclusion of a fast excitation limiter should be considered to limit the ceiling current to a specified value. Ceiling voltage would then still be available to force the rapid change in current.

The ceiling current of the excitation system should have a transient time capability equal to or greater than the short-time overload capability of the synchronous machine to which it is connected. ANSI C50.12-1982 and ANSI C50.13-1989 give the field winding short-time thermal overload requirements for cylindrical rotor synchronous generators. Note that these overload requirements are based on the voltage (rather than on the current) applied to the field winding. There is no corresponding requirement in ANSI C50.12-1982 for salient pole machines. Often an overexcitation limiter is used to limit thermal overload of the synchronous machine field winding and/or the excitation system.

5.3.2 Ceiling voltage

The ceiling voltage of an excitation system may be specified directly. Alternatively, it may be considered a function of the excitation systems nominal response. See IEEE Std 421.1-1986. This function is one area where it is easy to specify conflicting requirements, and the specification writer is cautioned to be sure that some other reference to ceiling voltage does not conflict with the response requirement. If the nominal response is specified by the user, then the manufacturer should select the appropriate ceiling voltage. For systems that obtain their energy from an ac source, the per unit voltage and (if applicable) current values of this source at which the nominal response requirement shall be met should be specified. Present standards base the rating of an exciter on its continuous output parameters and on its time response to transient change. It is understood that the equipment should function in the transient mode and achieve ceiling output conditions without any detrimental effects. The ratio of ceiling to normal operating voltage will increase as higher nominal response systems are specified. Refer to ANSI C50.12-1989 and ANSI C50.13-1989. Also see 6.6.1.

Copyright © 2004 IEEE. All rights reserved.
Copyright The Institute of Electrical and Electronics Engineers, Inc.
Provided by IHS under license with IEEE
No reproduction or networking permitted without license from IHS Not for Resale

A negative ceiling voltage may be required to control machine overvoltage conditions. Due to firing angle margin requirements of thyristor exciters, the magnitude of the negative ceiling is normally less than the positive ceiling. If a specific negative ceiling voltage is required, a higher positive ceiling voltage and resizing of equipment may be required.

5.3.3 Fault and pole-slipping duties

The excitation system should withstand, without damage, any faults or abnormal operation of the synchronous machine. Faults on the synchronous machine ac terminals will induce a large positive current into the field (adding to the normal field current), which will have a dc component and an ac component at the machine frequency. This result is important when rectifier exciters supplied at the power frequency are involved because the peak current occurs at the same point each cycle and tends to overload one phase of the rectifier. The magnitude and time duration of this induced current is a function of machine and system reactances. Refer to IEEE Std C37.18-1979 for a table of suggested values of induced currents for various types of machine construction. Besides the positive induced field current under faults, there can be induced ac currents, which could result in periods of net negative field current during pole-slipping events. When the total current tries to become negative, the resulting induced voltage may become excessive because the induced negative current has nowhere to flow. Excitation systems that employ solid-state rectifiers normally conduct current only in the positive direction. Some machines are inherently self-protecting due to additional current paths in the rotor. These may be damper windings or a solid steel (rotor body) structure. For the design of excitation systems supplied for machines that are inherently self-protected against large field pole slip voltages, the worst case of pole slip with protective relay action should be considered. The magnitude of the induced field voltage is a function of the machine design (damper circuits) and the rate of pole slipping (inertia and system strength). The calculated pole slip voltage, expected ac input voltage to the bridge, plus the appropriate design margin is used to size the bridge semiconductor peak reverse voltage to prevent breakdown failure. In machines where there is the possibility of large pole slip voltages or when insufficient information is available to accurately estimate expected voltages, protective devices such as nonlinear resistors or thyristor crowbar circuits with linear resistors should be sized to limit the voltage to acceptable levels for both the semiconductor bridge and the generator field winding while having adequate thermal capacity to carry the negative field current, which must flow to limit the voltage. Typically, user-supplied protection circuits will detect the pole slipping condition and trip the generator off line. For this reason, crowbar circuits or nonlinear resistors may be sized by the manufacturer for transient duty. When applicable, the time and currents that the built-in protective circuits must withstand should be specified by the user.

6. Exciter type and power source considerations

6.1 General

The exciter specification for new generators usually involves not only the selection of needed response characteristics and power ratings, but also the selection of operator and station control interfaces, the kind of exciter power source, startup power requirements, equipment location, and reliability. The manufacturer will usually coordinate these latter activities, which is especially true in systems where generator enclosures may also enclose the entire exciter and where exciter power windings may actually be included in the generator winding slots.

Specifications for updating or rebuilding older excitation equipment are more difficult to prepare because the specifier should not only provide enough information to allow the excitation system to be coordinated with the generator, but should also ensure that adequate control and protective systems are supplied. On many older systems, original design drawings of the excitation equipment and synchronous generator are either unavailable or are inadequate to provide the necessary data for the new excitation system. In these cases, some generator testing and examination may be required.

Copyright © 2004 IEEE. All rights reserved.

Copyright The Institute of Electrical and Electronics Engineers, Inc.
Provided by IHS under license with IEEE
No reproduction or networking permitted without license from IHS
Not for Resale

6.2 Operation parameters

Detailed operation parameters are required for any synchronous machine existing or proposed, for which a new excitation system is being supplied. These parameters include the following attributes to size and design the new excitation system:

> Synchronous machine maximum volt-amperes, power factor, frequency, terminal voltage, speed, and the type of prime mover.

Where the new excitation system will work directly into the main field of the synchronous machine, data gathered from the existing excitation system should include, but not be limited to, the following information of the synchronous machine:

a) Air gap field current at rated terminal voltage

b) No-load field current and voltage

c) Full-load field current and voltage

d) Field current and voltage at maximum operating conditions

e) Field resistance at measured temperature

Where a new voltage regulator will provide power to the field of a rotating exciter, the data for selecting the excitation system should include but not be limited to the following information for the main exciter:

— Exciter field no-load field current and voltage

— Exciter field full-load field current and voltage

— Field current and voltage at maximum operating conditions

6.3 Excitation systems for rotating exciters

For some older excitation systems, a pilot exciter provides current via motor operated rheostat to the main exciter's shunt field. Often the main exciter is in excellent condition (the commutator, rotor windings, brush rigging, and field coils), whereas the pilot exciter may have become a maintenance problem as a result of years of operation and equipment obsolescence. The associated field rheostat and electromechanical voltage regulator may pose an even greater maintenance dilemma. For those cases, the pilot exciter and voltage regulator can be replaced with a solid state excitation system working directly into the main exciter shunt field to enhance system performance and reduce maintenance. In some cases, the pilot exciter/voltage regulator may be a high-gain, multiwinding, boost-buck system.

6.3.1 Rotating exciter replacement considerations

In some cases, the complete replacement of the entire excitation equipment, both rotating machine and control, should be considered. These reasons may include

a) Extensive wear of the commutator

b) Shorted turns within the rotating elements

c) Vibration

d) Insufficient capacity to fulfill machine loading requirements

e) Performance problems

f) Commutator brush dust and maintenance

Here, a static exciter provides improved transient control of the generator output over the rotating exciter system. It also provides higher operating efficiency than the rotating exciter, resulting in less operating cost.

--`,,`,,-`-`,,`,,`,`,,`---
Copyright © 2004 IEEE. All rights reserved.
Copyright The Institute of Electrical and Electronics Engineers, Inc.
Provided by IHS under license with IEEE
No reproduction or networking permitted without license from IHS
Not for Resale

6.4 Rotating dc generator-commutator exciters

Most rotating dc exciters are shunt generators, sometimes with series windings. The exciter output supplies the main generator slip rings. The exciters often have multifield windings for buck-boost regulator operation and field rheostat control, and some have windings to ensure continuous magnetic bias. Although others may be separately excited from a pilot exciter through a rheostat. Depending on generator speed and exciter size, the exciter may be direct driven, gear, or motor driven.

The replacement of these exciters is facilitated by the presence of the slip rings. Placing a new permanent magnet generator or an exciter alternator on the shaft may mean extensive reworking of the main generator to allow the connection of the new shaft and provide proper support. New static exciters can be located remotely from the generator and wired to the slip rings. The old exciter can then be removed from the generator, if desired. Reevaluation of the turbine-generator shaft dynamics may be necessary in such a case.

An excitation power potential transformer should be provided whether the excitation power source is from the synchronous machine or from station service. The transformer provides electrical isolation, harmonic suppression, and fault current limiting. When the excitation system supply is from the synchronous machine terminals, the excitation system must also be equipped with some form of startup power from station service or the station battery. The reliability of these supply systems should be considered because the old plant design assumed a self-starting exciter, and many control and protective schemes not directly a part of the excitation system may have to be modified if the starting power is from station service. Finally, the physical location of a new exciter in an old plant should be carefully considered. These physical parameters include temperature, condensation, dust environment, cable run length to the generator and controls, power potential transformer, cable size, and so on.

6.5 Rotating ac exciters

Rotating ac exciters may use rotating rectifiers or stationary rectifiers in a brush/collector ring system. The power converter may consist of silicon-controlled rectifiers. In most systems, however, the generator terminal voltage is regulated through control of the exciter field current. Power to operate the exciter field may come from a permanent magnet generator, from the exciter itself or from an auxiliary source.

6.6 Static exciters

6.6.1 Potential source-rectifier exciter

Potential source excitation systems are common on new generators and as retrofits on older machines that have slip rings for supplying power to the field winding. Their retrofit applications typically involve replacement of pilot and main exciters where maintenance to the existing excitation equipment has become substantial (see 6.3.1).

Potential source static exciters have a very fast inherent response, and the faster synchronous machine voltage response time provided by these systems can often aid in the improvement of power system transient stability. In addition, these exciters typically provide higher operating efficiency (lower losses) than rotating systems. In a typical system, solid-state power rectifiers are combined with upgraded solid state controls, which eliminates most mechanical moving devices typical of many older excitation systems. The potential source excitation system dc ceiling voltage is a function of the ac voltage supplied by the power potential transformer, whose primary is typically connected at the generator output. To provide adequate support during system disturbances (such as electrical faults), the ceiling voltage of the potential source excitation system should be carefully chosen.

Copyright © 2004 IEEE. All rights reserved.

Copyright The Institute of Electrical and Electronics Engineers, Inc.
Provided by IHS under license with IEEE
No reproduction or networking permitted without license from IHS
Not for Resale

The potential source exciter derives its power from a potential source (which is often the terminals of the synchronous machine) and uses stationary controlled rectifiers to convert the ac power into a controlled dc output. Field flashing equipment is necessary for potential source exciters, which obtain their power from the synchronous machine terminals. In such cases, adequate self-cooling capability may be specified for startup without the need for auxiliary cooling power.

Special consideration should be given to the selection of the exciter power source. If station service is used, the transient exciter loads and the transient effects of station service transfer schemes should be considered.

For comparison with rotating exciter systems, the ceiling voltage should be determined at a specified percentage of rated supply voltage. For many systems, this determination is done assuming that 100% of the rated supply voltage is available. The actual value to be used is best determined from power system simulation studies. In those cases where such studies are not feasible, a ceiling voltage of 150% of the synchronous machine rated field voltage is considered to be a minimum requirement. Alternatively, this value can be based on the average supply voltage during the first 0.5 seconds after a selected fault. A range of 70% to 80% of rated supply voltage is not unusual. See 5.3.2.

6.6.2 Excitation system characteristics summary

Table 1 provides operating characteristic for various types of excitation systems to further assist in application selection.

The excitation system should operate during fault conditions down to a specified percentage of rated terminal voltage (25% of rated synchronous machine voltage is suggested). After restoration of the supply voltage, the excitation system should be capable of immediate recovery and should be able to provide maximum available voltage to restore the system voltage.

6.6.3 Compound source-rectifier exciter

For some applications, it is critical to provide a sustained three-phase fault current from the generator to maintain relay breaker trip coordination, minimize voltage dip, and improve voltage recovery time when extremely large motors are started across the generator output. In addition to the power potential transformer, compound source exciters use large power current transformers inserted into two or three phases of the generator. The output is rectified by the power semiconductor bridge or by a separate rectifier bridge, which provides field excitation when generator voltage is minimal. The magnitude of field voltage and current required to support the generator short circuit or large motor starting should be defined to ensure adequate excitation during the system overload. For these systems, the following information is required:

a) The amount of generator short circuit current required.
b) The time duration required for short circuit current support to ensure generator thermal limits are not exceeded.
c) Field voltage and field current required to support the required generator short circuit current.
d) Typical terminal voltage dip during large motor starting.

Applications where compound source exciter systems might be used include shipboard and industrial plants that generate their own power and are isolated from other power sources. In yet other systems, the power plant may be connected with the utility bus, but the utility bus tie is unable to provide necessary fault current for relay coordination or sufficient reactive power required for starting large motors.

As an alternative to the compound source exciter for starting large motors or responding to a severe voltage depression., a potential source excitation system can be designed with sufficiently high ceiling voltage (field forcing) to start large motors and/or improving voltage restoration time in the system. Today, the potential source excitation system with higher field forcing levels is often the preferred excitation type over the compound source exciter.

--`,,,`,,,-`-`,,`,,`,`,,`---
Copyright © 2004 IEEE. All rights reserved.
Copyright The Institute of Electrical and Electronics Engineers, Inc.
Provided by IHS under license with IEEE
No reproduction or networking permitted without license from IHS
Not for Resale

Table 1—Excitation system characteristics for various types of exciter systems

Feature	Exciter performance characteristics			
	Potential source-controlled rectifier	**Compound source-controlled rectifier**	**Brushless exciter (rotating rectifier exciter)**	**Rotating exciter (ac or dc)**
High initial response	Yes	Yes	No, unless a high ceiling regulator or rotating SCR system is used	No
Sustained fault current support	No	Yes	Yes, if regulator is so equipped (i.e., Battery or PMG or Excitation Support, current boost)	Yes, if regulator is so equipped with excitation support, current boost
Impact loading/ Motor starting	Yes, excellent (unless voltage dips are large)	Yes, excellent	Yes, fair or excellent, dependent on available field forcing	Yes, fair
Online rectifier maintenance possible	Yes	Yes	No	Yes, for semiconductor rectifiers used with ac exciters
Spare exciter user	Yes	Yes	No	Yes
Field monitoring, ground relaying	Yes	Yes	Yes, if Aux. slip rings, or opto/EM/ RF coupling is used	Yes
Rapid de-excitation	Yes, for halfwave control, field breaker discharge resistor is required	Yes	No	Yes, with generator field breaker and discharge resistor
General maintenance	Brushes and collectors	Brushes and collectors	Exciter diode check	Brushes and collectors and/or brushes and commutator

7. Excitation system performance measures and synchronous machine regulator considerations

This clause identifies the commonly used excitation system performance measures. IEEE Std 421.2-1990 contains detailed discussions of the parameters used. Most of the adjustable parameters that influence excitation control system performance are contained in the excitation control elements, including the voltage regulator error detector, compensators, and excitation system stabilizers and limiters.

Copyright © 2004 IEEE. All rights reserved.

Copyright The Institute of Electrical and Electronics Engineers, Inc.
Provided by IHS under license with IEEE
No reproduction or networking permitted without license from IHS
Not for Resale

The specification writer is cautioned to distinguish between these auxiliary control functions, which are a part of the automatic control of the excitation system and the control circuits associated with the interface between the excitation system and the power plant operation. Furthermore, many of the excitation system and the power plant operation functions may easily be confused with closely related protective functions. The specification of auxiliary control functions is included within this clause; the control requirements and protective requirements are discussed in the following two clauses. It should be noted that the specification of the voltage regulator parameters alone is not sufficient to obtain the desired performance. Parameters such as ceiling voltage, excitation system gain and time constants, synchronous machine parameters, and power system impedance greatly affect the performance of the excitation control system.

Control of the terminal voltage is the primary function of the synchronous machine regulator. The regulator may influence the stability of the synchronous machine at local mode or interarea frequencies depending on the gain, which includes the synchronous machine regulator, the exciter, the synchronous machine, and the power system. Power system stabilizers are often incorporated in modern excitation systems to provide the necessary small-signal stability and therefore the necessary damping of local and interarea modes of oscillations.

Performance can be specified only to the terminals of the equipment package being purchased. The supplier of the equipment can only be responsible for the performance that does not extend beyond the terminals of the equipment to be supplied. For example, the terminal voltage excursions of the synchronous machine for large disturbances cannot be entirely controlled by either the synchronous machine regulator or by the exciter.

7.1 Manual control performance

Often a manual controller is an integral part of the excitation system. The manual controller typically regulates the synchronous machine field voltage or field current from below the no-load field voltage to the maximum field voltage required by the synchronous machine at full load. The manual controller is typically used during initial commissioning and serves as a backup controller should the automatic voltage regulator fail or should loss of voltage sensing occur.

7.2 Automatic control performance (including the synchronous machine)

The synchronous machine regulator, including its limiting and stabilizing functions, regulates the synchronous machine terminal voltage by applying a control signal to the power bridge. The regulator, exciter, machine, and power system all influence the terminal voltage response. The specification writer should determine the dynamic performance requirements of the equipment being purchased. Dynamic performance classification is discussed in IEEE Std 421.2-1990. The material contained in this clause is general in nature. Detailed model studies may be required to determine the performance requirements for a specific system. To assist manufacturers in providing systems that meet the users needs, worst-case excitation system operation and special conditions should be specified.

7.2.1 Steady-state performance

The response of the excitation system to slow variations in load, frequency, and ambient temperature constitutes the steady-state performance. The term *load regulation* is the magnitude of voltage change resulting from a load change; the assumed load change is from synchronous machine no load to full load, unless otherwise specified. Load regulation of ±0.5% of rated terminal voltage is typical for proportional systems. Frequent changes in power system operating schedules and allowable variation in voltages are normally such that voltage regulation accuracy is not critical. Allowable variations in voltage caused by frequency and ambient temperature excursions are stated separately.

Copyright © 2004 IEEE. All rights reserved.
Copyright The Institute of Electrical and Electronics Engineers, Inc.
Provided by IHS under license with IEEE
No reproduction or networking permitted without license from IHS Not for Resale

7.2.2 Small-signal performance

Small-signal characteristics refer to those responses where nonlinearities in excitation control system operation can be neglected. The transient and frequency response characteristics associated with feedback control systems are the basis for specifying small-signal performance. Rise-time, overshoot, and settling time are the principal characteristics of interest in specifying transient response. The open-loop frequency response characteristics provide an indication of stability margins. The primary characteristics of interest are the low-frequency gain, crossover frequency, phase margin, and gain margin. On the other hand, the closed-loop frequency response characteristics are related to the transient response characteristics and provide an indication of small-signal response. The characteristics of interest are the bandwidth, the peak value of the amplitude response, and the frequency at which the peak occurs. IEEE Std 421.2-1990 contains a detailed description of the transient response and frequency response characteristics, including a tabulation of typical values. In order to tune the excitation control system for specific application requirements and allow retuning at periodic intervals for changes in power system requirements, most synchronous machine excitation systems are designed with adjustable parameters.

If the synchronous machine, exciter, and regulator are purchased together from the same manufacturer, then the off-line dynamic performance of the excitation control system could be specified using transient and frequency response parameters. However, if only a portion of the excitation control system is purchased, then the dynamic performance of that portion being purchased should be specified in a manner that permits the manufacturer to demonstrate compliance with the specification at the factory where the remaining portion of the excitation control system is not available. For example, a current practice is to replace older regulators while retaining the rotating exciter. In this case, the regulator parameters or the regulator transient and frequency response requirements may be specified. These parameters or responses should be determined from model studies. Usually, a range of parameters or responses is specified. For most applications, one of the manufacturer's standard equipment packages can be specified by comparing model study requirements with the manufacturer's literature.

In certain simple power system applications, it may be advisable that the required dynamic performance criteria for the complete excitation control system be provided to the manufacturer to possibly permit a better understanding of the requirements for a specific element within the system.

7.2.2.1 Systems with high initial response

A high initial response excitation system is capable of attaining 95% of the difference between the available ceiling voltage and the rated load field voltage in 0.1 seconds or less. When these systems are required, their small-signal performance may be specified in terms of the open-loop frequency response characteristics from terminal voltage error to the resulting exciter output. Neglecting any excitation stabilizer rate feedback or transient gain reduction functions, they will typically have an essentially flat frequency response from dc to some specified frequency at which the gain is 3 dB down from the dc value. The phase angle response is typically small up to a specified frequency where a maximum phase angle is identified. High initial response is often specified for improving stability of a generator or system in critical power system applications. High initial response characteristic of potential source static exciters and compound source-controlled rectifier exciters can be designed into some types of ac exciters. The frequency response may be modified by the application of an excitation stabilizer, as explained in 7.2.2.3.

To account for the dual requirements of higher steady-state gain (7.2.1) and allow for lower gain at power swing frequencies (excitation system stabilization), there are a number of alternative designs. These designs include, but are not limited to, the following:

a) Rate feedback

b) Transient gain reduction (lag-lead)

c) Proportional, integral, derivative (PID)/proportional, integral (PI)

--`,,,`,,-`-`,,`,,`,`,,`---
Copyright © 2004 IEEE. All rights reserved.

Copyright The Institute of Electrical and Electronics Engineers, Inc.
Provided by IHS under license with IEEE
No reproduction or networking permitted without license from IHS
Not for Resale

7.2.2.2 Systems without high initial response

Although some excitation systems employing rotating exciters may have slower response than a high initial response excitation system, the primary difference is in the large-signal performance rather than in the small-signal performance. Rate feedback, proportional feedback or transient gain augmentation are used to increase loop gain and phase margin. The specification is normally in terms of frequency response similar to high initial response units.

On machines with rotating dc exciters, especially original exciters retained in an excitation system upgrade, the performance may be limited by the excitation system time constants. A frequency response is often used or step change that defines the overshoot and settling time to determine performance of the system.

7.2.2.3 Excitation system stabilizer (rate feedback)

For many excitation control systems that are now designed and installed, some form of rate feedback is used to provide the stabilizing action, which is true especially when rotating exciters are used. The small-signal response is determined by settings of the synchronous machine regulator gain and the excitation stabilizer gain and time constant.

7.2.2.4 Excitation system stabilizer (transient gain reduction)

In some excitation systems, particularly high initial response systems, the excitation stabilizer function is accomplished by transient gain reduction. It is not common for both rate feedback and transient gain reduction to be employed at the same time. Transient gain reduction is used to reduce the gain within the specific band of frequencies where power system instability is of concern.

7.2.2.5 Excitation system stabilizer (proportional, integral, derivative/ proportional, integral)

Many excitation systems use PID style control in the feedforward path. This type of control has been used in modern excitation systems, especially those employing digital controls. PID control is common with automatic voltage regulator systems working directly into the field of rotating exciters. PI is a subset of the PID control and has been commonly used for static excitation systems working into the main field of a synchronous machine or static regulator systems employing proportional feedback from either generator field voltage or exciter field current. The PI (D) parameters are typically selected to achieve a specific voltage overshoot and recovery time to a step of reference input to the control system. See IEEE Std 421.5-1992.

7.2.3 Large-signal performance

The large-signal performance characteristics refer to those responses of excitation system output to sudden large changes in system loading that are characterized by nonlinear operation of the excitation control system. The extent to which the excitation system can improve first swing or transient stability depends on the excitation system positive forcing capability combined with the countering effect of induced synchronous machine field current and the delaying effect of the field time constant. Normally, the parameters to be specified are the ceiling voltage as determined by the source voltage available for potential source exciters and, additionally, the source current level for compound source exciters. In determining the specified parameter, the effect of current limiters should be considered. These parameters, if specified, should be under the most adverse conditions. For non-high initial response systems, either the excitation system nominal response or ceiling voltage should be specified. It should be noted that, if both ceiling voltage and excitation system nominal response are specified, a potential for conflicting requirements exists.

Copyright © 2004 IEEE. All rights reserved.
Copyright The Institute of Electrical and Electronics Engineers, Inc.
Provided by IHS under license with IEEE
No reproduction or networking permitted without license from IHS Not for Resale

For some special applications, the response of the excitation control system needs to be specified in detail. Load rejection and the resulting overspeed is one such operation, especially for hydro machines. The excitation control system should maintain the terminal voltage within acceptable limits in spite of the off-frequency operation resulting from overspeed. For systems with rotating dc exciters, the regulator power amplifier may need to provide negative voltage and current capability to provide required field forcing by the rotating exciter during load rejection.

Startup and shutdown are considered routine operations. Specific requirements related to these operations should be specified. Power system fault conditions, underfrequency operation, and their impact on the requirements of the excitation supply should be considered. A case where this consideration is especially important is in specifying potential source-rectifier systems.

7.2.4 Performance modeling

Mathematical models are used to study the behavior of the synchronous machine with the excitation system and the power system. They help predict the stability of the system and determine if performance of the system is acceptable during disturbances. The use of models to simulate the system behavior is the key to understanding the system more completely. In the following applications, modeling can be beneficial (see IEEE Std 421.5-1992):

a) Stability and voltage recovery after system disturbances.

b) Small-signal stability and large-signal transient analysis.

c) Sizing of critical power components in the excitation system to meet performance requirements. See 7.2.2 and 7.2.3.

d) Impact loading from system or large motor loads in local area and voltage recovery times and levels to ensure contractors do not drop out.

e) Fault current support to study relay coordination and critical breaker tripping.

f) Study of overvoltage transients for load rejection.

g) Performance of excitation system limiters and protective functions.

h) Power system stability related to local mode and/or interarea oscillations. See 7.3.2.1.

To perform the simulation studies, the excitation equipment manufacturer needs to provide the IEEE excitation system model, including limiters with parameters (see IEEE Std 421.5-1992). Other information includes the pertinent generator characteristics and system impedance.

7.3 Auxiliary control functions

A number of auxiliary control functions affect the performance of the excitation control system. They are auxiliary in that they may not be included in all applications or they may be active only under specific conditions such as when the automatic voltage regulator is in control. They are generally included as components within the synchronous machine excitation system and are not protective functions, although they may perform roles closely associated with certain protective functions. Modern excitation systems frequently include both auxiliary control and synchronous machine protective functions. Common features for the excitation system include the automatic voltage regulator, manual control, under/overexcitation limiters, power system stabilizer, and volts/Hertz limiter. Null balance is used for bumpless transfer between the voltage regulator and the manual control or between the main and the redundant control channel by autotracking.

Copyright © 2004 IEEE. All rights reserved.

Copyright The Institute of Electrical and Electronics Engineers, Inc.
Provided by IHS under license with IEEE
No reproduction or networking permitted without license from IHS
Not for Resale

7.3.1 Compensators

Several types of compensation are available on most excitation systems. Synchronous machine active and reactive current compensation are the most common. Either reactive droop compensation, reactive cross-current compensation, or reactive differential compensation and/or line drop compensation may be used, simulating an impedance drop and effectively regulating at some point other than the terminals of the machine by the use of current and potential transformer secondary connected in quadrature. The impedance or range of adjustment and type of compensation should be specified. See IEEE Std 421.1-1986.

Reactive droop compensation is used to minimize circulating currents between single and multiple generators in parallel or to the infinite bus. Where a unit step-up transformer is connected to a single machine, reactive droop compensation is not required.

Reactive differential compensation is used to maintain a flat voltage characteristic where multiple machines are connected to a single bus or through a step-up transformer that has multiple secondaries with a generator connected to each secondary. Where applicable, CTs are interconnected in a differential scheme between the generators.

Line drop compensation allows for compensation of the internal impedances of the step-up transformer by regulating the generator voltages closer to the high side of the transformer. The magnitude of compensation for either droop, cross-current, or line drop compensation should be adjustable.

7.3.2 Power system stabilizers (PSS)

There are several types of stabilizers in use with excitation systems. The excitation system stabilizer refers to a control element (previously described in 7.2.2) that is used to stabilize the excitation control system. The PSS is used to provide damping at power system frequencies associated with local and interarea modes of oscillation. Explanation of the PSS parameters is described in detail in the IEEE Std 421.2-1990. The specification should include a description of the application, including the frequency range of concern. The source of input to the PSS, e.g., VTs, CTs, tachometers, and so on, should be identified. The specification writer should be aware of the possible and undesirable interaction of certain PSS controls with the torsional natural frequencies of the machine mechanical shaft system. In those system designs, filters and protective devices may be needed to attenuate torsional signals and to trip the PSS for control circuit failure. Today, the trend is toward using the integral of accelerating power.

7.3.2.1 Power system stabilizer application—reference guide specification

The use of the PSS with an excitation system is dictated by the following different requirements:

a) To increase positive damping of low-frequency oscillations that may occur between the machine and the system.

b) Mandated based on a machine rating, for example, 50 MVA and above or connection to the grid at 23 kV and above.

c) As specified by a coordinating agency for use with the excitation system.

The objective of the PSS is to provide a positive contribution to damping of the generator rotor angle swings, which are in a broad range of frequencies in the power system. These swings range from low-frequency interarea modes (typically 0.1–1.0 Hz) to the generator local modes (typically 0.7–2.0 Hz). The low-frequency modes, commonly called *intertie* and *interarea* modes, are due to coherent groups of generators swinging against other groups in the interconnected system. These modes are present in all interconnected systems, and the damping is a function of tie line strength and loading. Weak ties due to line outages and heavy system loads can lead to poorly damped intertie modes. The PSS can provide significant improvements by allowing increased loading of interties between systems by way of adding to intertie mode damping. To be effective in intertie mode damping requires widespread application of stabilizers to most units, which participate in these power swing modes.

Copyright © 2004 IEEE. All rights reserved.
Copyright The Institute of Electrical and Electronics Engineers, Inc.
Provided by IHS under license with IEEE
No reproduction or networking permitted without license from IHS
Not for Resale

The PSS performance is often evaluated from the damping of the local mode, originating from the generator swinging against the rest of the power system. This mode is usually at frequencies between 0.7 Hz and 2.0 Hz. Stronger system ties and lighter loading tend to give higher local mode frequencies, and weaker ties and heavier loading tend to give lower local mode frequencies. The power system stabilizer performance should be designed to give acceptable performance over a wide range of system conditions, which may result from different operating conditions (such as lines out-of-service, varying load levels). The PSS benefit can be important during contingencies where lines are out-of-service and the system is weaker and less stable.

Oscillations between a group of generators in one area swinging against a group of generators in another area are termed interarea mode oscillations. Use of high-gain, high-speed exciters and power system stabilizers on generators participating in this mode have been successful in damping this oscillation. The generator participation may be determined by small-signal stability studies (eigenvalue analysis).

Properly tuned, the application of a PSS in the excitation system can provide a positive benefit to system stability over a wide bandwidth, including the ranges previously mentioned. There are several choices in input signals, those commonly used include speed or frequency, electrical power, and combinations of speed and power, which represent derived accelerating power. The type of PSS will depend on the particular equipment supplied by each manufacturer. It is recommended that the PSS control be evaluated by studies for each turbine-generator because this control may offer significant benefit at relatively low installed cost. Issues such as intraplant control modes and PSS torsional interaction (requires special models good for high frequency) should be included in the studies.

7.3.3 Underexcitation limiter

The underexcitation limiter is included in most applications to prevent operation beyond the underexcited portion of the synchronous machine capability curve (usually associated with stator end iron heating), or operation in a region that would approach the steady-state stability limit, or both. Although the underexcitation limiter is often an impedance sensing device, its limiting characteristic is usually plotted in terms of real vs. reactive power at rated terminal voltage, so that it can be compared with the synchronous machine capability curve or steady-state stability limit. Its performance should be coordinated with the loss of excitation protection provided for the synchronous machine. In some cases, the underexcitation limiter does not block the PSS from operation. The underexcitation limiter may be specified for recalibration based on synchronous machine operating temperature.

7.3.4 Overexcitation limiter

The overexcitation limiter is used primarily to avoid overheating of the synchronous machine field winding for excursions in field current above the continuous rating. The permissible thermal overload of this winding is inversely proportional to time, and therefore, limiter action may be delayed. However, very high ceiling exciters may be provided with an additional instantaneous current limiter action. This limiter is often incorporated in a multistep control and protective package for the field winding. The overexcitation limiter may be specified for recalibration based on synchronous machine cooling.

7.3.5 Volts-per-Hertz (V/Hz) limiter

A volts-per-Hertz (V/Hz) limiter is so named because the flux is proportional to the terminal voltage divided by the frequency. Excessive flux can result in overheating and damage to synchronous machine stator or transformer core iron laminations. The V/Hz limiter is used to prevent overheating that may arise from excessive magnetic flux due to underfrequency operation or overvoltage operation, or both.

Copyright © 2004 IEEE. All rights reserved.

Copyright The Institute of Electrical and Electronics Engineers, Inc.
Provided by IHS under license with IEEE
No reproduction or networking permitted without license from IHS
Not for Resale

A V/Hz limiter is commonly used to protect a synchronous machine (and any connected transformers) for conditions in which the synchronous machine excitation could be applied during startup or shutdown, possibly subjecting the synchronous machine (and connected transformers) to excitation during reduced speed (and thus reduced frequency) operation. It is also used to protect the synchronous machine (and connected transformers) from high flux levels, as they may occur with the machine off-line, during which there is no machine armature reaction current to oppose increases in terminal voltage for corresponding increases in excitation. Also, it is sometimes used when two synchronous machines are synchronously started together, one as a motor and the other as a generator. In this type of operation, the V/Hz limiter acts to raise the terminal voltage as frequency increases. The V/Hz characteristic should be specified.

7.3.6 Torsional stabilizers

The use of series capacitors in transmission lines creates electrical tuned circuits with natural frequencies whose complements may interact with the natural mechanical shaft torsional resonant frequencies of the synchronous machine. Excitation systems with sufficiently wide frequency response may be equipped with control systems to provide positive damping torques at these frequencies. These control systems are generally complex. They must incorporate control, monitoring, and protective circuits because of the hazard of severe machine damage should the control misoperate.

7.3.7 Var or pf control functions

In certain applications, the voltage regulator is sometimes supplemented or replaced with a var or power factor controller or regulator. When a voltage regulator is provided with a var or power factor (var/pf) controller, the voltage reference of the voltage regulator's voltage adjuster typically will receive automatic "raise" and "lower" commands from the controller so as to maintain a constant steady-state level of vars or pf. The var or pf controller tend to perform the right action during a disturbance because the voltage regulator will react immediately and the var or pf will slowly integrate its setpoint back to normal after the voltage regulator corrective action occurs. Var/pf regulators are simpler than var/pf controllers in that they provide direct feedback control of vars, pf, or reactive current. These types of regulators typically use a reference adjuster and error detection methods similar to that with a voltage regulator, except for the sensed feedback signal. One must be careful in applying var/pf regulators.

The use of var/pf regulators and controllers have their origins in industrial applications of synchronous motors and generators, in which the synchronous machine is typically tied directly to a plant distribution bus. In many of these industrial applications, the machine voltage is expected to follow any variations in the utility-fed system voltage, in which case machine voltage regulation may not be desirable. Var/pf regulators and controllers are often used in these types of industrial applications.

In this sense, each synchronous machine on a power system might be placed into one of the two following categories:

Voltage Supporting Machines. Those machines that would be expected to aid in the regulation of system voltage. Most generators and synchronous condensers should be in this category, particularly larger machines or any machines that deliver power directly to the transmission system. These machines should typically regulate voltage, in which case specification of a var/pf controller or regulator would not be appropriate.

Voltage Following Machines. Those machines that would not be expected to aid in the regulation of system voltage, but whose voltage would tend to be expected to follow the variations of incoming system voltage. This category would tend to include small synchronous machines that are connected to lower voltage distribution systems whose incoming voltage is regulated by the utility with load tap changing transformers or other such devices. These machines will typically be the ones that could justifiably be specified to include a var/pf controller or regulator.

--`,,,`,,`-`-`,,`,,`,`,,`---

Copyright © 2004 IEEE. All rights reserved.
Copyright The Institute of Electrical and Electronics Engineers, Inc.
Provided by IHS under license with IEEE
No reproduction or networking permitted without license from IHS Not for Resale

It is in the interest of maintaining proper grid voltage stability and support that as many machines as possible be operated as voltage-supporting, rather than as voltage-following, machines.

7.3.8 Joint voltage (or var) control

A joint voltage control is an outer loop control strategy responding together in a coordinated response to two or more machines causing a proportional change in multiple generator outputs. The adjusted machine quantity can be voltage (or vars if appropriate). When the control strategy signal is raised or lowered, all machines will increase or decrease their output accordingly. The control could be open or closed loop.

8. Control considerations

Many devices associated with control of the excitation system should be considered. If the manufacturer is to provide all of the devices, then they should be included in the specification. Generally, the objective is to obtain from the manufacturer a complete package requiring only installation and wiring at the station. Coordination of the control equipment design with the manufacturer, with the supervisory control hardware, and with the excitation system performance specification is essential.

8.1 De-excitation

An effective and dependable means of de-energizing the synchronous machine field is necessary. De-energization methods and combinations can include an ac field breaker combined with crowbar silicon controlled rectifier shunting circuit (see IEEE Std 421.1-1986) and a discharge resistor. Special exciter control circuits to force the output to zero or negative voltage can be used on most modern excitation systems. Redundant shutdown methods are frequently employed to guard against control and/or breaker failure. Other means of de-excitation may include the use of an ac contactor with freewheeling diode for halfwave controlled power bridges. A low-voltage ac power breaker may be appropriate for some potential source static exciter designs. Some configurations of the compound source static exciter permit the use of a shorting breaker. Special exciter control circuits to force the output to zero can be used on most systems. Speed coordination is often used with all devices for startup and shutdown of the synchronous machine. Rapid de-excitation can be accomplished using numerous methods. These methods include electronically with an inverting bridge or mechanically using a dc field breaker with a discharge resistor.

8.2 Unit manual control

Manual control may be implemented using a field rheostat in the case of dc rotating exciters. A base adjuster system is frequently used in rotating rectifier exciters. In most other types of exciters, some form of dc regulator is included to provide control of the exciter voltage or field current. Automatic transfer to manual control of exciter voltage and/or current may result from control component failure or functional failure detection or overexcitation (overvoltage, overcurrent). Manual transfer by the operator is useful for direct control of the exciter voltage or current for test purposes or online maintenance of the ac regulator.

In some systems, the AVR is required for stable operation. On these systems, transfer to manual is not permitted and failure of the AVR may result in a unit trip or transfer to a second AVR if available.

Copyright © 2004 IEEE. All rights reserved.

Copyright The Institute of Electrical and Electronics Engineers, Inc.
Provided by IHS under license with IEEE
No reproduction or networking permitted without license from IHS
Not for Resale

8.3 Unit automatic control

If automatic control is specified, the interface between the user-supplied and manufacturer-supplied equipment should be defined. A typical requirement for the manufacturer would be to provide a specified change in terminal voltage or reactive power for each closure of a contact. The duration of each contact closure should also be specified. If the excitation system setpoint is to be an analog or digital quantity rather than a raise or lower contact input, then a specified change in terminal voltage or reactive power for a specified change in the setpoint should be defined. In this case, a reliable setpoint signal supplied by the user is necessary.

Consideration should be given to the need for control and monitoring of excitation system operation from a remote site. Even in fully automated systems, it may be prudent to have some form of remote manual operation capability. For digital systems, provision for verifying the integrity of the communication link can be of value. It is also common to provide for local operation at the site of the excitation equipment, including indicating lights and metering.

Online testing of the excitation system operation, from either local or remote sites, may be desirable. In such a case, the purchaser should designate the parameters that are to be measured, and the manufacturer should provide convenient access points in the control circuitry.

8.4 Unit automatic start/stop

If automatic start and/or stop is specified, the interfaces between user-supplied equipment and manufacturer-supplied equipment should be specified. A typical specification would require the manufacturer to provide all equipment necessary to place the excitation system into operation (or to remove it from operation) on closure of a contact.

Automatic positioning of all adjustable control setpoints should be addressed. It is generally necessary for the controls to be preset either before automatic startup or after automatic shutdown. Local methods of control and provisions for remote control can be very useful.

8.5 Unit automatic voltage matching

It is common to include automatic voltage adjusting capability in conjunction with automatic synchronizing equipment for voltage matching. Consideration should be given to the interface requirements between the automatic synchronizer and the excitation equipment.

8.6 Setpoint adjusters

The operation of the excitation equipment to raise or lower voltage or reactive power can be accomplished in several ways. The most commonly used method today for new installations are digital setpoint adjusters. Analog or digital signals from automated supervisory equipment may be required in some applications. Provision for this interface between user-supplied and manufacturer-supplied equipment should be specified. It is important to specify the range of setpoint operation in terms of the terminal voltage. In raise and lower contact operation, this may take the form of a specified closure time or number of closures to provide a specified change in terminal voltage or reactive power. The need for remote operation of the setpoint should be considered along with the need for local operation at the site of the excitation equipment. In automated systems, the need for manual as well as automatic operation should be considered.

Copyright © 2004 IEEE. All rights reserved.
Copyright The Institute of Electrical and Electronics Engineers, Inc.
Provided by IHS under license with IEEE
No reproduction or networking permitted without license from IHS Not for Resale

8.7 Setpoint tracking

In many applications, it is important to consider the need for setpoint tracking equipment. This equipment causes the manual or backup setpoint to track the excitation requirements for the operating point of the synchronous machine, so that, in the event of automatic or primary control failure, the excitation system would have an appropriate manual or backup setpoint. Although of lesser importance, setpoint tracking of the automatic control may be a desired operating convenience.

8.8 Control circuit interface to power plant circuits

The interface between the excitation control circuits and the power plant circuits can be at a variety of voltages and currents. Coordination between the user and the manufacturer is necessary to facilitate the design.

A wide range of dc voltages are used with control circuits including the standard battery circuits of 48 V, 125 V, or 250 V dc. The nominal range of the dc voltage should be specified. A typical range is 80% to 115% due to loading and battery charge conditions.

A wide range of ac voltages are also used in control circuits including the standard voltages of 120 V, 240 V, 480 V, or 600 V. Both single phase and three phase are used. Again, the range should be specified, and a typical range is 90% to 110%.

Some user philosophies allow a momentary interruption of the control power supply, whereas others require that a continuous supply be provided. Historically, such contingencies were addressed by specifying mechanically latched relays. The recent practice of using solid-state switching necessitates that users specify the maximum duration of power supply interruption. Field flashing may be essential to some installations. AC or dc voltages may be used and may be the same as the voltages for the control circuits or may come from a separate supply. The current and the maximum time duration of this current should be specified. The specification should also reflect the troubleshooting and maintenance of the user's plant technical personnel, such as the procedure of briefly de-energizing control circuits to isolate grounds.

The type and number of instrumentation transformers required to provide ac voltage and current signals for the excitation system should be considered. The type and number of transducers required to monitor excitation system parameters should also be considered. If circuit breakers are required in the control circuit supply, they should be specified, including placement if appropriate.

Interface strategies may need to be considered for a new excitation reftrofit, which includes

a) New excitation systems may need a signal for shaft speed that does not exist in the original system, requiring the addition of a new shaft speed sensor.

b) Some hydros units are able to operate in either the generate-, condense-, or pump-mode; here additional signaling may be required to indicate which mode has been selected to ensure proper operation of excitation limiters, stabilizer, and so on.

c) Additional CTs may be required into the excitation system for monitoring and measurement.

d) The installation of high current dc leads from the generator collector's rings requires the specification writer to describe the method and manner of this system.

e) Description of the connection of the PPT to the excitation system (right or left side location) and to the generator output leads should be specified.

f) Some excitation systems may require inputs or outputs that necessitate the addition of auxiliary relays in the existing control circuits for a successful control interface.

Copyright © 2004 IEEE. All rights reserved.

Copyright The Institute of Electrical and Electronics Engineers, Inc.
Provided by IHS under license with IEEE
No reproduction or networking permitted without license from IHS
Not for Resale

8.9 Data logging

In many excitation systems today, data logging is provided to record various parameters that are measured within the excitation system. The data are stored in records that can be retrieved and reviewed that represent the operating data at time of an event. The operating data are triggered to save the information into a record and time stamp to read into a viewing program when retrieved. Sequence of events can be recorded to define specific activity during the operation of the excitation system.

8.10 Communication interface for digital excitation systems

Digital excitation systems are often provided with a communications interface to allow the user to control, operate, and/or receive information. The information or task can include but not be limited to field calibration and setup, control of machine parameters, monitoring, metering, and so on. The information transfer between the excitation system and the external medium is processed by various unique or common protocols via a serial link communication port, e.g., RS485 or RS232. Several different protocols are available for communication. The selection of the protocol is based on a number of different factors, including preference, in-house standards, and availability. Modems can be used to transfer the data to the PC or outside communication line. The specification should request communication software and support documentation for the operating system.

9. Protection considerations

9.1 General requirements

Modern excitation systems typically provide a higher degree of protection than do older excitation systems. Protection is generally divided into two categories: protection of the excitation system and protection of equipment external to the excitation system. Annunciation of abnormal conditions should be considered so that the operator is apprised of the impending equipment protective action.

9.2 Protective action

The excitation system specification should be coordinated with devices capable of detecting conditions external to the equipment that may cause damage to the excitation equipment and to the synchronous machine. Such conditions may include generator overvoltage, generator loss of field, generator field overexcitation, pole-slip reverse current, field ground, loss of excitation source power and excessive volts/Hertz in the synchronous machine and step-up transformer.

Internal conditions within the excitation system that may require protective devices include loss of rectifier cooling and exciter phase unbalance. Supervisory functions in the excitation system may be considered, which return excitation to a predetermined level after some period of overexcitation. This process may include transfer to manual control mode or backup automatic voltage regulator.

9.3 Annunciation action

Annunciation should be considered within the excitation system to alert operators to potential problems or to aid in the determination of conditions that may have caused the excitation system to trip, minimizing equipment troubleshooting time. In addition to annunciation of those protective actions noted in 9.2, annunciation is sometimes provided for loss of control power supplies, loss of regulator sensing, high temperatures within the excitation cubicle and failure of thyristors, diodes, and fuses. Although several of these functions may be grouped together for annunciating to operators in a remote location, independent annunciation or local diagnostic display should identify individual faults locally.

Copyright © 2004 IEEE. All rights reserved.
Copyright The Institute of Electrical and Electronics Engineers, Inc.
Provided by IHS under license with IEEE
No reproduction or networking permitted without license from IHS
Not for Resale

10. Environmental and enclosure considerations

10.1 Environmental

The environment in which the excitation system will be placed should be clearly defined and appropriate requirements should be specified. Environments that expose the excitation system to electrical transients, radio interference, temperature extremes, humidity, altitude, vibration, corrosive atmospheres, or any unusual conditions should be specified. Interference generated by the excitation system should also be considered. Furthermore, any special requirement, such as tropicalization (encapsulation, protection from humidity, rodents, insects) or seismic requirements, should be indicated. Detailed cooling information should be spelled out to the manufacturer, including primary cooling media, maximum and minimum coolant temperatures and pressure, cooling tube material, cathodic protection, and any necessary plant interface.

10.2 Enclosure

When the final location in the plant has been determined, an appropriate enclosure should be specified by the user. Its suitability is dependent on several factors, an extreme example of which could be that the enclosure is against a wall with limited accessibility. Specifics should be mentioned as to the ease of access and removal of particular equipment items within the enclosure. If the enclosure has access to all sides, it may be desirable to specify doors on all sides for ease of maintenance. Depending on temperature limitations, suitable cooling vents or louvers should be included for necessary cooling or ventilation or both, particularly if cooling fans are used. Other considerations should include dust filters and rodent-proof screened louvers. Additional considerations, depending on the specific power plant, may be some of the following:

a) User-mounted monitoring instruments for operation, testing, and adjustment
b) User mounted pushbuttons and switches for manual/automatic controls
c) Paint/finish
d) Construction
    1) Terminals/connectors
    2) Wiring/wire marking
        i) Insulation flammability
        ii) Dangerous materials, i.e., asbestos, PVC, and so on
    3) Nameplates
    4) Fire protection
    5) Outdoor/indoor (NEMA type)
        i) Tightness, dripproof, dustproof, splashproof, and so on
        ii) Heat exchangers, air conditioning
    6) Dimensional constraints
    7) Seismic
    8) Heaters/thermostats
    9) Doors/panels/accessibility
    10) Handles/locks/latches
    11) Cable entry location, sealing methods
    12) Mounting and anchoring
    13) Breaker interlocks
    14) Grounding

Copyright © 2004 IEEE. All rights reserved.

Copyright The Institute of Electrical and Electronics Engineers, Inc.
Provided by IHS under license with IEEE
No reproduction or networking permitted without license from IHS
Not for Resale

15) Personnel protection
16) Circuit isolation/barriers
17) Interior lighting/receptacles/communication
18) Noise level: Audible
19) Electromagnetic interference
20) Radio frequency interference
21) Telephone influence factor

10.3 Instruments and controls for remote mounting

Instruments, switches and pushbuttons, or controls may be required for remote mounting on a switchboard. For digital excitation systems, control may be via a computer or remote terminal. They may use a touch pad or other method rather than discrete contacts to control setpoints. If the excitation system equipment is to be designed for remote control, it may include the following functions:

a) Control of the generator voltage setpoint adjuster
b) Control of the manual setpoint adjuster
c) Placing the excitation system in or out of service
d) Voltage regulator and manual transfer
e) Testing excitation system operation
f) Indication of excitation system voltage, field current, and all other parameters that the manufacturer considers pertinent to the operation of the excitation system
g) All indicating lights, as necessary, for the user and recommended by the manufacturer

For Digital Excitation Systems:

h) Communication port/s and protocol
i) Digital remote display terminal for control and monitoring

During the review of the manufacturer's drawings, sufficient data should be provided by the excitation system manufacturer to ensure proper coordination, if remote equipment is to be supplied or mounted by others. That data will include

— Signal characteristics for the instruments, i.e., control voltage and current requirements, in addition to the type and range of signals
— Control switch functions
— Control, start, stop, and shutdown control circuits
— Number and kind of circuits for indicating lights

11. Information to be provided by the manufacturer

11.1 General requirements

Excitation system information that is necessary to efficiently conduct the project engineering, erection, testing, troubleshooting, and operation of all excitation components is required. The specification requirements should be specific to the project, including due times allowed for drawings, data, documentation format, and submission of descriptive information in a hard copy form or alternative media format. A delivery schedule should be submitted by the manufacturer after the award of contract and should be coordinated with the overall equipment and plant design schedule.

--`,,,`,,`-`-`,,`,,`,`,,`---
Copyright © 2004 IEEE. All rights reserved.
Copyright The Institute of Electrical and Electronics Engineers, Inc.
Provided by IHS under license with IEEE
No reproduction or networking permitted without license from IHS
Not for Resale

11.2 Information that may be provided at the time of submission of proposals

If requested, the manufacturer should furnish performance data of the excitation system with a written description of the principles of operation. Usually, such requests might include typical outline drawings of excitation components showing approximate dimensions. It should also include special tools that the user needs to be aware of for evaluation and special software requirements for calibration and setup or control of the unit for digital systems.

11.3 Information provided prior to delivery of the equipment

The manufacturer should submit drawings and descriptive material to the purchaser for review (and approval if required) as follows:

a) After the award of contract and release for engineering, drawings will be provided that show actual overall dimensions and weights of the principal excitation system components. Drawings should be provided within a designated time.

b) After the award of contract and release for engineering, drawings showing full details of foundation requirements, bus drawings (as applicable), wiring drawings, wiring lists, and schematic diagrams for all parts of the excitation system, including all necessary interfacing components and auxiliary devices required to make a complete system to be provided within a designated time.

c) Mathematical models for use in dynamic computer studies (See IEEE Std 421.5-1992) to be provided within a designated time.

11.4 Information to be provided with equipment when it is delivered

The manufacturer should provide instruction and/or operating and maintenance manuals describing the equipment in detail and the recommended procedures for assembling, erection provisions, dismantling, maintaining, diagnosing trouble, and operating the excitation system and its components. Purchasers should clearly define whether they require these manuals to be submitted for approval, or if they are satisfied to accept the manufacturer's standard manuals. In general, the manuals should include at least the following:

a) Technical data including weights of all major components

b) All pertinent vendor bulletins, instruction manuals, and drawings prepared by the various components subsuppliers

c) Procedures for assembling, disassembling, adjusting, operating, troubleshooting, and maintaining the excitation system, including the recommended complement of spare parts

d) Special procedures, tools, hardware or software required for test, and/or calibration

e) Maintenance requirements, such as a list of lubricants, air filters, or special needs

f) A manufacturer-specified selected set of the component physical arrangement, schematic, and excitation system wiring drawings that may be reduced in size to suit the page format of the instruction manuals

g) A set of assembly drawings or printed bulletins that show all individual equipment components and that indicate and identify each component item number, including the common commercial designation

11.5 Photographs

Photographs of entire or partial equipment may be part of the instruction or maintenance manual, or both, whenever available or practical. Photographs may not be an essential requirement if their only purpose is to aid in the interpretation of outline drawings by operating and maintenance personnel.

Copyright © 2004 IEEE. All rights reserved.

Copyright The Institute of Electrical and Electronics Engineers, Inc.
Provided by IHS under license with IEEE
No reproduction or networking permitted without license from IHS
Not for Resale

11.6 Drawing review procedure during project stage

The manufacturer should submit the drawing and descriptive material described in 11.3 to the purchaser in a timely manner in accordance with the time schedule stipulated. The purchaser should review the submitted drawings, mark them appropriately, and return them to the manufacturer within a designated period of time after their receipt.

11.7 Drawing review after commissioning is completed

The manufacturer should implement all field changes onto the relevant drawings and either provide an addendum to or a revision of the relevant drawings previously designated as shipped drawings. These drawings should then receive the status of “as installed”.

12. Equipment tests

The tests described in 12.1–12.7 are intended to verify that all excitation system elements are functioning properly and are capable of performing their specified function.

12.1 Excitation control equipment factory tests

Routine factory tests may not require the complete factory assembly of the excitation system; however, it is advisable that each element of the excitation system be subjected to the following tests. Some of these factory tests may be performed during field commissioning. Some tests may be waived if type tests have been performed by the manufacturer and a certified test report has been provided. Customer witness testing and/or certified data may be stipulated for factory testing, type testing, and/or special test required for the excitation system. In addition to the factory tests, type tests may be required and performed on the prototype design.

12.1.1 Routine tests

The following routine factory tests are suggested for the excitation system prior to shipment:

a) Visual examination to verify major component or subassembly identity, location, and mounting conformance to manufacturer’s drawings
b) Dielectric tests specified in IEEE Std 421.3-1997
c) Verification of proper electrical and mechanical operation of all control functions of the excitation system
d) Verification of input–output characteristics of each excitation control element
e) Digital testing, protocol verification of interface to the excitation system related to control, communication, and so on

12.1.2 Type tests

In addition to routine factory tests, unless otherwise specified by the purchaser, type tests should only be made on a prototype design. Some test(s) may be waived if type tests have been performed by the manufacturer and a certified test report has been provided. These tests may include

a) Input–output characteristics of each excitation control element over specified ranges of supply voltage, frequency, and operating temperature. Verify gain, linearity, maximum and minimum outputs, and stability to be within tolerance.
b) Time constants of all excitation system elements by frequency response testing techniques described in IEEE Std 421.2-1990.

Copyright © 2004 IEEE. All rights reserved.
Copyright The Institute of Electrical and Electronics Engineers, Inc.
Provided by IHS under license with IEEE
No reproduction or networking permitted without license from IHS
Not for Resale

c) Temperature and cooling air flow, i.e., heat runs at specified load and at specified overloads.

12.1.3 Special tests

Burn-in, if specified, is performed with the regulator power amplifier operating at specified load (current and voltage) at a specified ambient temperature for a specified period of time.

12.2 DC commutator exciter

12.2.1 Factory tests

Factory tests should include measurement or verification of

a) Insulation resistance (meggering)
b) DC resistance of all windings at a specified temperature
c) Resistance of all external current limiting resistors and field rheostats, where applicable
d) Air gap
e) No-load saturation curve, from residual to exciter ceiling
f) High potential test in accordance with IEEE Std 421.3-1997
g) Specified overspeed of rotating exciter

12.2.2 Type tests

In addition to routine factory tests, unless otherwise specified by the purchaser, type tests should only be made on a prototype design. Some test(s) may be waived if type tests have been performed by the manufacturer and a certified test report has been provided. These tests may include

a) Load saturation curve, up to 110% of normal ceiling voltage
b) Exciter regulation curve
c) Pilot exciter regulation curve, where applicable
d) Efficiency test to determine segregated losses
e) Operating temperature, i.e., heat run
f) Excitation system voltage time response and nominal response
g) Audible noise
h) Commutation
i) Exciter time constant(s)
j) Operation at anticipated overspeed

12.3 Alternator-rectifier exciter

12.3.1 Factory tests

Factory tests should include the measurement or verification of

a) Insulation resistance
b) Resistance of all windings at a specified temperature
c) Resistance of all external current limiting resistors and field rheostats, where applicable
d) Air gap
e) No-load saturation curve, from residual voltage to exciter ceiling voltage
f) Phase rotation

Copyright © 2004 IEEE. All rights reserved.

Copyright The Institute of Electrical and Electronics Engineers, Inc.
Provided by IHS under license with IEEE
No reproduction or networking permitted without license from IHS
Not for Resale

g) Pilot exciter no-load voltage and phase rotation, where applicable

h) Continuity of rectifier fuses

i) Rectifier leakage

j) Range and stability of rectifier phase control, where applicable

k) High potential test in accordance with IEEE Std 421.3-1997

l) Operation at anticipated overspeed

12.3.2 Type tests

In addition to routine factory tests, unless otherwise specified by the purchaser, type tests should only be made on a prototype design. Some test(s) may be waived if type tests have been performed by the manufacturer and a certified test report has been provided. These tests may include

a) Audible noise

b) Load saturation curve, up to 110% of nominal ceiling voltage

c) Main exciter regulation

d) Pilot exciter regulation, where applicable

e) Heat run

f) Exciter time constant

g) Excitation system voltage response time and response in accordance with IEEE Std 421.2-1990, where applicable

h) Operation at anticipated overspeed, at the anticipated maximum

12.4 Potential source-rectifier exciter

12.4.1 Excitation power potential transformer(s) factory tests

Routine factory tests should be made on each transformer in accordance with IEEE Std C57.12.91-2001 or other standards as applicable. Routine tests should include measurement of

a) Winding resistance

b) Ratio

c) Polarity and phase relationships

d) No-load loss (if applicable)

e) Magnetizing current at rated voltage

f) High potential test in accordance with IEEE Std 421.3-1997

g) Induced potential

12.4.2 Type tests

In addition to routine factory tests, unless otherwise specified by the purchaser, type tests should only be made on a prototype design. Some test(s) may be waived if type tests have been performed by the manufacturer and a certified test report has been provided. These tests may include

a) Impedance, load loss, and regulation

b) Temperature rise, i.e., heat run

c) Impulse test(s)

Copyright © 2004 IEEE. All rights reserved.
Copyright The Institute of Electrical and Electronics Engineers, Inc.
Provided by IHS under license with IEEE
No reproduction or networking permitted without license from IHS Not for Resale

12.5 Controlled rectifier assembly factory test

12.5.1 Factory tests

Routine factory tests on each controlled rectifier assembly should be made. Routine tests should include measurement or verification of

a) Continuity of rectifier fuses

b) Polarity and phase relationships

c) Range and stability of rectifier phase control

d) High potential test in accordance with IEEE Std 421.3-1997

12.5.2 Type tests

In addition to routine factory tests, unless otherwise specified by the purchaser, type tests should only be made on a prototype design. Some test(s) may be waived if type tests have been performed by the manufacturer and a certified test report has been provided. These tests may include

a) Rated current, watt losses

b) Temperature rise, i.e. heat run

c) Burn in, 48 hours unless otherwise specified (designate if current or voltage burn in is required)

d) Verify current balance between parallel bridges

12.6 Compound source-rectifier exciter

12.6.1 Excitation power potential transformer(s) factory tests

Routine factory tests should be made on each transformer in accordance with IEEE Std C57.12.91-2001 or other standards, as applicable. Routine tests should include the measurement of

a) Ratio

b) Winding resistance

c) Polarity and phase relationships

d) No-load loss (if applicable)

e) Magnetizing current at rated voltage

f) High potential test in accordance with IEEE Std 421.3-1997

g) Induced potential

h) Saturating characteristics of saturable elements, if applicable

12.6.2 Type tests

In addition to routine factory tests, unless otherwise specified by the purchaser, type tests should only be made on a prototype design. Some test(s) may be waived if type tests have been performed by the manufacturer and a certified test report has been provided. These tests may include

a) Impedance, load loss, and regulation

b) Temperature rise, i.e., heat run

c) Impulse test(s)

Copyright © 2004 IEEE. All rights reserved.

Copyright The Institute of Electrical and Electronics Engineers, Inc.
Provided by IHS under license with IEEE
No reproduction or networking permitted without license from IHS
Not for Resale

12.6.3 Excitation power current transformer(s) factory tests

Routine factory tests should be made on each transformer in accordance with IEEE C57.12.00-2000, where applicable and unless otherwise specified, or other standards, as applicable. Routine tests should include the measurement of

a) Winding resistance

b) Ratio

c) Polarity and phase relationships

d) No-load loss

e) Magnetizing current at rated voltage

f) High potential test in accordance with IEEE Std 421.3-1997

g) Induced potential

h) Saturating character of saturable elements (if applicable)

12.6.3.1 Type tests

In addition to routine factory tests, unless otherwise specified by the purchaser, type tests should only be made on a prototype design. Some test(s) may be waived if type tests have been performed by the manufacturer and a certified test report has been provided. These tests may include

a) Impedance and load loss

b) Temperature rise, i.e., heat run

c) Impulse test(s)

d) Average (not rms.) saturation voltage, at specified overload current

12.6.4 Linear reactors (if applicable)

12.6.4.1 Factory tests

Routine factory tests should be made on each reactor in accordance with IEEE C57.12.00-2000 or other standards, as applicable. Tests should include measurement or verification of

a) Winding resistance

b) Impedance, including taps, if any, and losses

c) Linearity, to 110% of normal rated voltage unless otherwise specified

d) High potential test in accordance with IEEE Std 421.3-1997

e) Induced potential

12.6.4.2 Type tests

In addition to routine factory tests, unless otherwise specified by the purchaser, type tests should only be made on a prototype design. Some test(s) may be waived if type tests have been performed by the manufacturer and a certified test report has been provided. These tests may include

a) Temperature rise, i.e., heat run

b) Saturation curve to specified overload voltage

c) Impulse test(s)

Copyright © 2004 IEEE. All rights reserved.
Copyright The Institute of Electrical and Electronics Engineers, Inc.
Provided by IHS under license with IEEE
No reproduction or networking permitted without license from IHS Not for Resale

12.6.5 Rectifier assemblies

12.6.5.1 Factory tests

Factory tests on each controlled rectifier assembly should be made. Routine tests should include measurement or verification of

a) Continuity of rectifier fuses (if used)

b) Polarity and phase relationships

c) High potential test in accordance with IEEE Std 421.3-1997

12.6.5.2 Type tests

In addition to routine factory tests, unless otherwise specified by the purchaser, type tests should only be made on a prototype design. Some test(s) may be waived if type tests have been performed by the manufacturer and a certified test report has been provided. These tests may include

a) Rated current, watt losses is sometimes required at rated voltage.

b) Temperature rise, i.e., heat run.

c) Burn-in, 48 hours unless otherwise specified (designate if voltage and/or current burn-in is required).

d) Verify current balance.

12.7 Field tests

The tests in 12.7.1–12.7.4 can serve as a guide in placing excitation control equipment in service and to verify that all excitation system control and protective elements are operating properly and are capable of performing their intended function. It should be made very clear who is responsible for the various tests and for documenting the tests results.

12.7.1 Routine tests of other components

All other electrical parts, i.e., bus ducts, rheostats, and similar devices, should be tested individually in accordance with the applicable IEEE standards.

In the event parts are mass produced and the routine tests performed on them are in accordance with the previously noted standards, individual tests of such parts will not be required.

It may be more practical to test these individual components in the factory as applicable. However, in any event, the contactor should submit certified test data covering each part.

12.7.2 Tests with synchronous machine not running

These tests may be executed or supervised by the manufacturer's field service engineering personnel, as follows:

a) Verify external wiring to be in accordance with contract drawings.

b) Verify operation of all relays, contactors, circuit breakers, and voltage adjusters.

c) Verify operation of manual control means and regulator power amplifiers using station supply and simulated load per manufacturer's instruction books.

d) Verify operation of all excitation system control and protective devices using simulated input signals and station power supply per manufacturer's instruction books.

Copyright © 2004 IEEE. All rights reserved.

Copyright The Institute of Electrical and Electronics Engineers, Inc.
Provided by IHS under license with IEEE
No reproduction or networking permitted without license from IHS
Not for Resale

12.7.3 Tests with synchronous machine running at rated speed and off-line

These tests may be done or supervised by the manufacturers field service engineering personnel, as follows:

a) Energize machine with excitation system in the manual control mode.

b) Verify operation of excitation control elements using machine voltage signal per manufacturer's instruction books.

c) Verify satisfactory transfer of excitation control from manual to automatic mode and transfer between redundant voltage regulators.

d) While in automatic control mode, check stability and adjust the excitation system stabilizer for satisfactory performance per IEEE Std 421.2-1990.

e) Perform functional tests of each of the protection features associated with the excitation system, e.g., conduction failure where possible, field ground detector, PT fuse failure, and loss-of-cooling.

f) Perform functional and dynamic test of applicable excitation limiters, e.g., field current, volts/Hertz, and so on, in accordance with IEEE Std 421.2-1990.

g) Where applicable, perform tests of redundant power supply transfer, rectifier bridges, or other redundancy.

h) Test trip excitation system by simulating a trip condition, for example, loss-of-cooling.

i) Phase rotation of transformer to generator to verify wiring.

j) Verify field flash.

k) Verify small-signal transient response (step and/or frequency response), and where applicable (for high initial response systems), excitation system voltage time response, ceiling field voltage, and response ratio according to guidelines given in IEEE Std 421.2-1990.

NOTE—On some thermal units, tests may be performed online at the lowest attainable load if required.

12.7.4 Tests with synchronous machine connected to power system

These tests are the responsibility of the user with the participation of the manufacturer's representative, if specified by the user. These tests may be done or specified as follows:

a) Verify that polarity and phase relationships of machine terminal voltage and current signals to the excitation system are in accordance with the contract drawings and the manufacturer's instruction books.

b) Verify satisfactory transfer of excitation control from the manual to automatic control mode and vice versa.

c) Verify settings and operation of compensators, online limiters, for example, under excitation limiters, and protective devices using machine terminal current and voltage signals per applicable IEEE standards. Test settings per 12.7.2 may be used if power system conditions preclude testing with final in-service setting. Where feasible, verify final setting and operation of all excitation control and protection elements with machine operating in normal and worst-case system configurations.

d) Verify settings and operation of power system stabilizers, where applicable, per instructions in manufacturer's instruction books and guidelines given in IEEE Std 421.2-1990 or alternatively in accordance with the user's test procedure.

NOTE—Final determination of suitable settings for some devices is the responsibility of the user; however, the manufacturer may provide suggested settings when specifically requested.

Copyright © 2004 IEEE. All rights reserved.
Copyright The Institute of Electrical and Electronics Engineers, Inc.
Provided by IHS under license with IEEE
No reproduction or networking permitted without license from IHS Not for Resale

Annex A

(informative)

AC–DC power converters

Naturally commutated power converters are produced in a variety of configurations of thyristors and diodes. The operation of these converters is frequently explained with reference to the four quadrants of an xy-coordinate system. The coordinates are voltage (x) and current (y). There are four possible modes of operation depending on the polarity of the voltage and the current.

Quadrant 1 is for voltage and current, both of which are positive. Power flow is from the ac source to the dc load. An example of this type of operation is a diode bridge that supplies a dc load. The dc voltage is adjusted by controlling the ac supply voltage to the rectifier. A bridge composed of thyristors in one set of legs and diodes in the other set will also operate in quadrant 1. In this case, the ac supply voltage can be fixed and the dc voltage can be adjusted from zero to maximum by controlling the firing angle of the thyristors.

Quadrant 2 operation is when the voltage is negative but the current is still positive. In this case, the power flow is from the dc system to the ac system. A full thyristor bridge can transiently operate in this mode. For firing delay angles of 0 degrees to 90 degrees, this bridge functions as a quadrant 1 rectifier (ac power to dc). With firing delay angles of 90 degrees to 180 degrees, it functions as a quadrant 2 inverter (dc power to ac). An inductive load is necessary to maintain positive current flow during negative voltage excursions.

Quadrant 3 and 4 operations are similar to quadrant 1 and 2 operations, respectively, except that both the current and voltage are reversed. This type of operation is implemented by a reverse polarity connection of quadrant 1 and 2 equipment.

Excitation systems employing solid-state rectification are normally supplied either as one-quadrant or two-quadrant devices.

Unusual applications requiring both positive and negative current should be supplied as four-quadrant devices. A four-quadrant device may be made up of two two-quadrant devices in anti-parallel. The ratings of the positive and negative clause can be different. Four-quadrant converters are not normally justified for excitation systems since the improvement resulting from the negative current is minimal. They are primarily used on dc reversing motor drives or ac cycloconverter drives where current as well as voltage should be reversed.

Copyright © 2004 IEEE. All rights reserved.

Copyright The Institute of Electrical and Electronics Engineers, Inc.
Provided by IHS under license with IEEE
No reproduction or networking permitted without license from IHS
Not for Resale

Annex B

(informative)

Excitation questionnaire

This questionnaire requests information required for sizing an excitation system for synchronous machines. Depending on the type of installation you are sizing, complete the sections that apply.

Customer_____

Project/Plant Reference_____

1. TYPE OF APPLICATION: ❑ Generator ❑ Synchronous Motor ❑ Synchronous Condenser

2. MACHINE DATA:

Electrical Power	kW		Manufacturer	
Mechanical Power	hp		Type/No.	
Rated ac Voltage	V		Speed	Rpm
Rated ac Current	A		Prime Mover Type	
Frequency	Hz		Rated Power Factor	PF

3. EXCITER TYPE: (Please fill-in appropriate column)

Excitation Data			**Rotary Brush-Type Exciter**	
	Generator (Motor) Field		**Rotary Brushless Exciter**	
No-Load Field Voltage, dc		**V**		**V**
No-Load Field Current, dc		**A**		**A**
Full-Load Field Voltage @ Rated PF, dc		**V**		**V**
Full-Load Field Current @ Rated PF, dc		**A**		**A**
Field Resistance		**Ohms @ °C**		**Ohms @ °C**
Field Time Constant		**T'do Sec.**		**Sec.**

Note: The output of the new excitation system will be connected to either the Generator (Motor) Field or to the Exciter Field depending on the application. It is critical to acquire the appropriate field data to which the new excitation system will be connected. This information will allow us to select the appropriate equipment for your application.

Copyright © 2004 IEEE. All rights reserved.
Copyright The Institute of Electrical and Electronics Engineers, Inc.
Provided by IHS under license with IEEE
No reproduction or networking permitted without license from IHS
Not for Resale

4. EXCITATION SYSTEM OPERATING POWER SOURCE

	Permanent Magnet Generator (PMG)	Powered from Generator Output	Station Power Voltage
Voltage	**V**	**V**	**V**
Frequency	**Hz**	**Hz**	**Hz**
PMG Volts No Load	**V**		
PMG Volts Full Load	**V**		
PMG VA Rating	**VA**		
PMG 1 or 3 Phase	**Phase**		

5. VOLTAGE SENSING INPUT DATA

Voltage Sensing	Primary Volts:		V	Single Phase	
Transformer Rating	Secondary Volts:		V	*(Specify Phase)*	A - B - C
Ratio and Configuration:	Ratio:			Three Phase	Wye
	Phase Rotation:				Open Delta

6. CURRENT SENSING INPUT DATA

Current Transformer For Paralleling	Primary Amps:	A	Current Transformer is Located in Phase:	A
	Secondary Amps:	A		B
	Ratio:			C

7. AC CONTROL POWER INPUT

AC Control Power To Excitation System	Voltage:	V
	Frequency	Hz
	Tolerance: (+/-)	

Note: Standard AC Control Power voltage to Excitation System is 120vac.

8. DC CONTROL POWER INPUT

DC Control Power To Excitation System	Voltage	V
	Tolerance: (+/-)	

Note: Standard DC Control Power voltage to Excitation System is 125Vdc.

Copyright © 2004 IEEE. All rights reserved.

Copyright The Institute of Electrical and Electronics Engineers, Inc.
Provided by IHS under license with IEEE
No reproduction or networking permitted without license from IHS
Not for Resale

9. ENVIRONMENTAL DATA:

INSTALLATION	INDOOR	OUTDOOR
AMBIENT TEMPERATURE (C or F)	MINIMUM-	MAXIMUM-
ELEVATION OF INSTALLATION		
AIR QUALITY (Coal dust, house dust, explosive, etc)		
Cabinet Dimensional Restraints		
Power Potential Transformer Location -Left or Right of Rectifier Bridge		

10. Remarks

Name and title _____

Place _____ Date _____

Copyright © 2004 IEEE. All rights reserved.
Copyright The Institute of Electrical and Electronics Engineers, Inc.
Provided by IHS under license with IEEE
No reproduction or networking permitted without license from IHS
Not for Resale