An American National Standard

IEEE Standard Test Procedures for Photomultipliers for Scintillation Counting and Glossary for Scintillation Counting Field

Sponsor
Nuclear Instruments and Detectors Committee
of the
IEEE Nuclear Science Group

Secretariat for American National Standards Committee N42
Institute of Electrical and Electronics Engineers

Approved March 21, 1972
Reaffirmed December 9, 1982
Reaffirmed September 28, 1990

IEEE Standards Board

Approved April 28, 1972
Reaffirmed March 11, 1991

American National Standards Institute

© Copyright 1972 by

The Institute of Electrical and Electronics Engineers, Inc

345 East 47th Street, New York, NY 10017, USA

No part of this publication may be reproduced in any form, in an electronic retrieval system or otherwise, without the prior written permission of the publisher.

--`,,`,,`-`-`,,`,,`,`,,`---

Copyright The Institute of Electrical and Electronics Engineers, Inc.
Provided by IHS under license with IEEE
No reproduction or networking permitted without license from IHS

Not for Resale

American National Standard

An American National Standard implies a consensus of those substantially concerned with its scope and provisions. An American National Standard is intended as a guide to aid the manufacturer, the consumer, and the general public. The existence of an American National Standard does not in any respect preclude anyone, whether he has approved the standard or not, from manufacturing, marketing, purchasing, or using products, processes, or procedures not conforming to the standard. American National Standards are subject to periodic review and users are cautioned to obtain the latest editions.

CAUTION NOTICE: This American National Standard may be revised or withdrawn at any time. The procedures of the American National Standards Institute require that action be taken to reaffirm, revise, or withdraw this standard no later than five years from the date of publication. Purchasers of American National Standards may receive current information on all standards by calling or writing the American National Standards Institute.

Copyright The Institute of Electrical and Electronics Engineers, Inc.
Provided by IHS under license with IEEE
No reproduction or networking permitted without license from IHS
Not for Resale

Foreword

(This Foreword is not a part of IEEE Std 398-1972, Test Procedures for Photomultipliers for Scintillation Counting and Glossary for Scintillation Counting Field, ANSI N42.9-1972.)

Photomultipliers are extensively used in scintillation counting for the detection and analysis of ionizing radiation. The utilization of these detectors in a variety of technical disciplines have made standard test procedures desirable so that measurements may have the same meaning to all manufacturers and users.

This standard is not intended to imply that all tests and procedures described herein are mandatory for every application, but only that such tests as are carried out on photomultipliers for scintillation and Cerenkov counting should be performed in accordance with the procedures given in this document.

This publication was prepared by the Nuclear Instruments and Detectors Committee of the IEEE Nuclear Science Group:

G. L. Miller, *Chair*
Louis Costrell, *Secretary*

R. K. Abele	F.S. Goulding	W.G. Spear
J. L. Blankenship	T.R. Kohler	J.H. Trainor
W. L. Brown	H.R. Krall	S. Wagner
R. L. Butenhoff	W.W. Managan	F.J. Walter
J. A. Coleman	H.M. Mann	H.R. Wasson
D.C. Cook	D.E. Persyk	A.L. Whetstone

Project leaders for the development of this IEEE Standard were:

D. E. Persyk	H.R. Krall

At the time it approved this standard, the American National Standards Committee N42 on Radiation Instrumentation had the following personnel:

Louis Costrell, *Chair*
David C. Cook, *Recording Secretary*
Sava I. Sherr, *Executive Secretary*

American Chemical Society.....Louis P. Remsberg, Jr
American Conference of Governmental Industrial Hygienists.....Jesse Lieberman
American Industrial Hygiene Association.....W. H. Ray
American Nuclear Society.....W. C. Lipinski
Thomas Mulcahey *(Alt)*
American Society of Mechanical Engineers.....R. C. Austin
American Society of Safety Engineers.....*(Representation Vacant)*
American Society for Testing and Materials.....John L. Kuranz
Jack Bystrom *((Alt))*
Atomic Industrial Forum.....*(Representation Vacant)*
Electric Light and Power Group.....G. S. Keeley
G. A. Olson *(Alt)*
Health Physics Society.....J. B. Horner Kuper
Robert L. Butenhoff *(Alt)*
Institute of Electrical and Electronics Engineers.....Louis Costrell
Lester Kornblith, Jr
P. J. Spurgin
J. Forster *(Alt)*

Copyright The Institute of Electrical and Electronics Engineers, Inc.
Provided by IHS under license with IEEE
No reproduction or networking permitted without license from IHS
Not for Resale

Instrument Society of America ..... M.T. Slind
J. E. Kaveckis *(Alt)*
Manufacturing Chemists Association ..... Mont G. Mason
National Electrical Manufacturers Association ..... Theodore Hamburger
Oak Ridge National Laboratory ..... Frank W. Manning
Scientific Apparatus Makers Association ..... Robert Breen
Underwriters' Laboratories ..... Leonard Horn
U.S. Atomic Energy Commission, Division of Biology and Medicine ..... Hodge R. Wasson
U.S. Atomic Energy Commission, Division of Reactor Development and Technology ..... Paul L. Havenstein
W. E. Womac *(Alt)*
U.S. Department of the Army, Materiel Command ..... Abraham E. Cohen
U.S. Department of the Army, Office of Civil Defense Mobilization ..... Carl R. Siebentritt, Jr
T. G. Provenzano *(Alt)*
U.S. Department of Commerce, National Bureau of Standards ..... Louis Costrell
U.S. Department of Health, Education, and Welfare Public Health Service ..... Henry J. L. Rechen, Jr
Roger Schneider *(Alt)*
U.S. Naval Research Laboratory ..... D.C. Cook
Members-at-Large ..... J. G. Bellian
O. W. Bilharz
S. H. Hanauer
John M. Gallagher, Jr
Voss A. Moore
R. F. Shea

--`,,`-`-`,,`,,`,`,`,,`---
Copyright The Institute of Electrical and Electronics Engineers, Inc.
Provided by IHS under license with IEEE
No reproduction or networking permitted without license from IHS
Not for Resale

When the IEEE Standards Committee approved this standard on March 21, 1972, it had the following membership:

J. Forster, *Chair*
B. O. Weinschel, *Vice Chair*
S.I. Sherr, *Secretary*

S. J. Angello
S. Aronow
J. Avins
B. B. Barrow
F. K. Becker
R. Brereton
W. H. Cook
L. Costrell
G.E. Hertig
J.L. Koepfinger
H. Lance
B.J. Leon
D.T. Michael
J.D.M. Phelps
R.H. Rose, II
S.W. Rosenthal
G. Shapiro
R.M. Showers
P.H. Smith
F.G. Timmel
L. van Rooij
R.V. Wachter
W.T. Wintringham

Copyright The Institute of Electrical and Electronics Engineers, Inc.
Provided by IHS under license with IEEE
No reproduction or networking permitted without license from IHS
Not for Resale

CLAUSE PAGE

1. General 1

1.1 The Scintillation Counter 1
1.2 The Cerenkov Counter 1

2. Photomultiplier Characteristics 1

2.1 General Characteristics 1
2.2 Additional Characteristics Specific to Scintillation and Cerenkov Counters 2

3. Testing of Photomultiplier Characteristics 2

3.1 Pulse-Height Characteristics 2
3.2 Spurious-Pulse Characteristics 9
3.3 Pulse Timing Characteristics 9
3.4 Measurement Techniques 11

4. Test Conditions for Photomultipliers 20

5. Test Instrumentation 20

6. Glossary for Scintillation Counting Field 21

7. Common Acronyms 27

Copyright The Institute of Electrical and Electronics Engineers, Inc.
Provided by IHS under license with IEEE
No reproduction or networking permitted without license from IHS Not for Resale

An American National Standard

IEEE Standard Test Procedures for Photomultipliers for Scintillation Counting and Glossary for Scintillation Counting Field

1. General

The photomultiplier is an essential component in scintillation and Cerenkov counting. In these applications there are special requirements with regard to pulse-height characteristics, spurious pulses, and timing.

1.1 The Scintillation Counter

The scintillation counter is a radiation detector that consists of three major components: a scintillating medium that produces a flash of light when ionizing radiation interacts with it; one or more photomultipliers, optically coupled to the scintillator, which converts the light flash to an amplified electrical impulse; and associated electronic instrumentation which powers the photomultiplier and processes the output signal.

1.2 The Cerenkov Counter

The Cerenkov counter is a radiation detector that consists of three major parts: a medium in which light is produced by the Cerenkov effect; one or more photomultipliers, optically coupled to the Cerenkov medium; and the associated electronic instrumentation which powers the photomultiplier and processes the output signal.

2. Photomultiplier Characteristics

2.1 General Characteristics

The tests herein described for photomultipliers to be used in scintillation counters are supplementary to those tests described in IEEE Std 158-1962 , Methods of Testing Electron Tubes, which covers the following basic characteristics commonly requiring specification for photomultipliers (numbers in brackets refer to section numbers of IEEE Std 158-1962 , Part 5.):

Radiant sensitivity [2.4]
Uniformity of sensitivity [2.7]
Current amplification [3.2]
Current-voltage relationship [4.2]
Dynamic performance, pulse performance [5.2]

Copyright © 1972 IEEE All Rights Reserved

--`,,`-`-`,,`,,`,`,,`---
Copyright The Institute of Electrical and Electronics Engineers, Inc.
Provided by IHS under license with IEEE
No reproduction or networking permitted without license from IHS
Not for Resale

Electrode dark current [6]
Noise [7]
Peak-output-current limitations [9]

2.2 Additional Characteristics Specific to Scintillation and Cerenkov Counters

Additional specifications and tests required for photomultipliers used in scintillation and Cerenkov counting in connection with the preceding basic characteristics are the following:

1) Pulse-height characteristics
2) Spurious-pulse characteristics
3) Pulse-timing characteristics

3. Testing of Photomultiplier Characteristics

3.1 Pulse-Height Characteristics

The following sections deal with pulse characteristics of photomultipliers used in counting applications. Throughout this section it is assumed that the pulse-height analyzer is linear and that channel numbers are with respect to the extrapolated pulse-height analyzer zero.

3.1.1 Pulse Height.

A photomultiplier consists of a photocathode which produces photoelectrons and an electron multiplier structure which provides gain by secondary electron multiplication. For a given number N of photoelectrons emitted from the photocathode, a number $G \times N$ electrons are observed at the anode. The factor G is the multiplier gain, which depends upon the interstage potential differences applied to the electrodes. The counting rates and resolving times shall be such that pulse pileup is sufficiently low so as not to significantly affect the accuracy of the results.

When the input consists of photon packets sufficiently well spaced in time, the photomultiplier can resolve them as separate events, and the output signal consists of separate charge pulses. These pulses can be amplified with a charge-sensitive preamplifier, followed by a main amplifier, and sorted with a pulse-height analyzer. The term pulse height is commonly used to designate the charge associated with a PMT (photomultiplier tube) output pulse.

Pulse height is measured with a charge-sensitive preamplifier and a pulse-height analyzer. The system can be calibrated in terms of coulombs per channel with a precision pulser. The slope and zero intercept shall be determined.

3.1.2 Pulse-Height Resolution.

A photomultiplier produces a charge output proportional to the number of photons incident on the photocathode. Because of the statistical variations inherent in the conversion of photons to photoelectrons, together with the statistical nature of the secondary emission process, the output-signal charge varies from one pulse to the next even for equal numbers of incident photons. The resulting distribution in pulse height limits the photon resolution of the device and hence limits the energy resolution of a scintillator-photomultiplier combination. For this reason a figure of merit called PHR (pulse-height resolution) is introduced to characterize the device's ability to discriminate between slightly different input-signal amplitudes.

PHR is the fractional full width at half maximum of the pulse-height-distribution curve (FWHM/$A1$) of the peak of interest, where A 1 is the pulse height corresponding to the maximum of the distribution curve. It is customary to state PHR in units of percent. The following discussion outlines several kinds of PHR measurements that are used to characterize photomultipliers.

Copyright © 1972 IEEE All Rights Reserved

Copyright The Institute of Electrical and Electronics Engineers, Inc.
Provided by IHS under license with IEEE
No reproduction or networking permitted without license from IHS Not for Resale

In general there are five distinct PHR measurements that serve to define the photon-and-electron resolution of photomultipliers and photomultiplier-scintillator combinations.

1) ^{137} *Cs PHR for a Scintillation-Crystal PMT Combination*. This PHR is principally a function. of the photocathode quantum efficiency and spatial uniformity, as well as the resolution of the scintillation crystal.
2) *Light-Emitting Diode PHR*. This PHR is obtained with an LED (light-emitting diode) calibrated to provide a ^{137}Cs-equivalent signal (or stated number of photoelectrons per pulse). The LED PHR is numerically smaller than the scintillator-PMT PHR because the contribution of the crystal is not present. (See Fig. 1.)
3) ^{55}*Fe PHR for a Scintillation-Crystal-PMT Combination*. This is the PHR obtained from a scintillation crystal and an ^{55}Fe source. This PHR depends on both the crystal and the photomultiplier.
4) *Single-Electron PHR*. The PHR of the SEPHR (single-electron spectrum)has significance only for those photomultipliers that can resolve a single-electron peak. A weak dc light is used as the source of single electrons from the photocathode. (Note that this measures only the resolution of the electron multiplier section of the device.)
5) *Electron Resolution*. Electron resolution is a measure of the ability of the electron multiplier section of the device to resolve inputs consisting of either one or two electrons. The measurement applies only to those photomultipliers that can resolve one- and two-electron events. As an alternative to measuring the FWHM of the electron peak, the peak-to-valley ratio can be measured. (See Fig. 2.)

Measurement of ^{137} Cs PHR requires a ^{137} Cs source, an NaI(T1) scintillation crystal of approximately the same diameter as the photocathode, a pulse-height analyzer, and the photomultiplier to be tested. The PMT is optically coupled to the scintillation crystal, for example, with the aid of silicone grease or viscous oil. The crystal housing must be at photocathode potential. The source is placed in contact with the crystal housing.

The PMT should be operated at a voltage such that linear response is obtained; that is, output is proportional to input intensity. Improper anode bias, excessive gain (and thus excessive anode current), or improper voltage divider circuits may give rise to a compression of the output-pulse distribution, yielding an incorrect (low value) of PHR.

The scintillation-crystal-PMT combination must operate for several hours to obtain optimum PHR.

Phosphorescence of the crystal and PMT faceplate may require several hours to decay to a low enough level to permit accurate measurements to be made. Therefore, photomultipliers and crystals should not be exposed to ambient laboratory light for some time before measurements are made.

The test enclosure must be designed to avoid high electric fields in the region of the photocathode. If the PMT is operated at photocathode ground (positive high voltage), there is little problem with external electric fields at the photocathode. If negative high voltage is used, electric fields near the photocathode must be low. This may be accomplished by an electrostatic shield having the same potential as the photocathode. Otherwise, excessive noise on the output signal and electrolysis, followed by eventual loss of photosensitivity, may develop. As with other PMT measurements, a magnetic shield is required.

Copyright © 1972 IEEE All Rights Reserved

Copyright The Institute of Electrical and Electronics Engineers, Inc.
Provided by IHS under license with IEEE
No reproduction or networking permitted without license from IHS Not for Resale

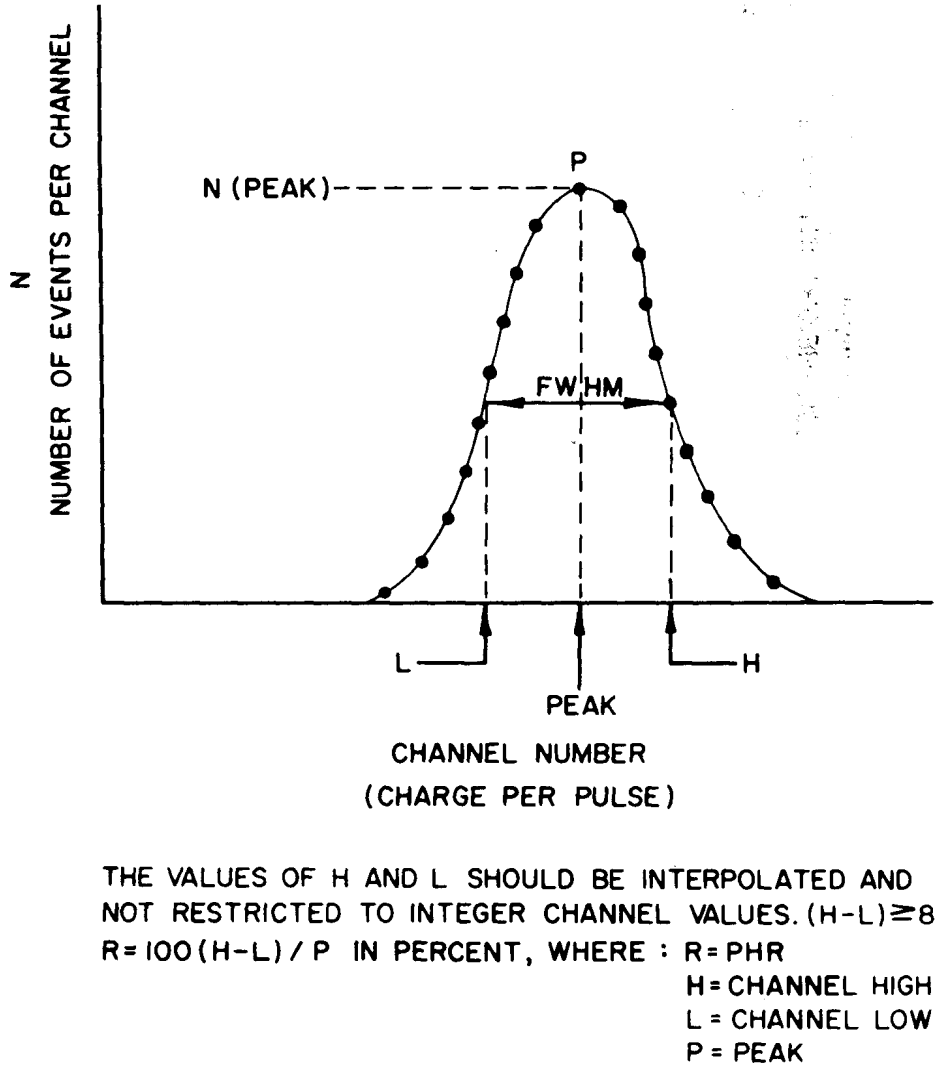

Figure 1—^{137}Cs Equivalent LED spectrum

Copyright © 1972 IEEE All Rights Reserved

Copyright The Institute of Electrical and Electronics Engineers, Inc.
Provided by IHS under license with IEEE
No reproduction or networking permitted without license from IHS
Not for Resale

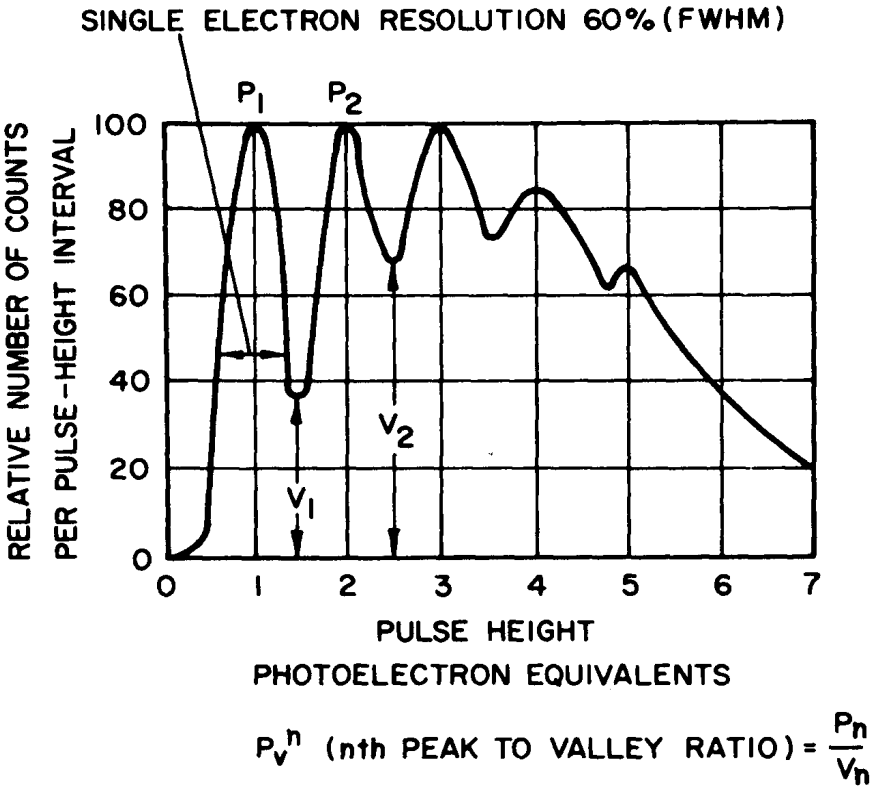

Figure 2—Typical Electron Resolution of Photomultiplier Tube Incorporating GaP First Dynode

The ^{137}Cs distribution should be displayed on a pulse-height analyzer and so positioned that the upper half of the full-energy-peak distribution spans at least eight channels. At least 50 000 counts must be contained within the channels comprising the FWHM.

The value of PHR, in percent, is obtained from $R = 100\ (H\text{-}L)/P$, where R is the PHR, H and L are the upper and lower channels, respectively, corresponding to the half-amplitude points of the distribution, and P is the channel number (PEAK) corresponding to the peak of the distribution. A linear interpolation should be made to determine the value of H and L. Alternatively, other curve-fitting techniques may be used. The exact method should be described.

In the case of a computer-controlled pulse-height analyzer, a different method can be employed to determine the FWHM by assuming that the full-energy peak approximates a truncated Gaussian distribution. While the observed distribution is usually slightly skewed and not truly Gaussian, PHR values determined on the basis of a Gaussian distribution will, in general, agree with PHR values obtained from the former method.

For an LED, the PHR should be stated in terms of a ^{137}Cs-equivalent flash; the LED should be adjusted in the flash intensity until the resulting pulse-height distribution exhibits a peak in the same channel as an NaI(TI) crystal and ^{137}Cs source combination. The LED shall be positioned such that it uniformly illuminates the photocathode. PHR may be calculated from the previously discussed method.

This measurement of PHR may be independently verified with another calibrated LED, and good agreement should be obtained. This type of independent measurement is not as straightforward when NaI(T1) crystals are used, due to variations in resolution between different crystals. The PHR obtained with a ^{137} Cs-equivalent LED may be used as a

Copyright © 1972 IEEE All Rights Reserved

Copyright The Institute of Electrical and Electronics Engineers, Inc.
Provided by IHS under license with IEEE
No reproduction or networking permitted without license from IHS
Not for Resale

guide for estimating the PHR that could be obtained with an NaI(Tl) crystal. However, the LED flash does not simulate the spatial distribution of light that is obtained with an NaI(Tl) crystal and neither does it take account of the inherent crystal resolution, so this method can only provide an approximate limit to the ^{137} Cs resolution that can be expected.

PHR for an ^{55}Fe (5.9-keV X-ray) source, using an NaI(T1) crystal coupled to the photomultiplier, provides a figure of merit for resolution of low-energy events. Measurements are made as outlined in the preceding discussion on ^{137}Cs PHR. The effect of crystal resolution is more pronounced in the ^{55}Fe PHR measurement than in the ^{137}Cs PHR measurement.

The ^{55}Fe distribution is skewed, and a Gaussian distribution does not adequately describe the observed distribution. For this reason, resolution measurements based on assumptions of Gaussian distributions are not satisfactory. The ^{55}Fe is placed in contact with the crystal housing.

SEPHR is the fractional FWHM of the single-electron distribution obtained from the photomultiplier. Note that this measurement applies only to those photomultipliers that exhibit a peaked single-electron distribution. (Most venetian blind photomultipliers are unable to resolve single-electron events even though their ^{55}Fe and ^{137}Cs PHR may be comparable to focused-type electron multipliers.)

The single-electron peak is displayed on the pulse-height analyzer system while dc (continuous) light illuminates the photocathode. The tube dark pulses may be predominantly single electron in origin and may be used to obtain a single-electron distribution; however, the dc light is required to verify the placement of the true single-electron peak on the analyzer display.

SEPHR, in percent, may be calculated from

$$S = 100(H - L)/P \tag{1}$$

where S is the SEPHR, H and L are the upper and lower channels, respectively, corresponding to the half-amplitude points, and P is the peak channel number (PEAK). Linear interpolation should be used to locate H and L.

Some photomultipliers are able to resolve a single-electron peak, but the resulting distribution may not fall to one-half amplitude on the low-energy side due to noise contributions. In such cases, the quantity L in Eq 1 is undefined, and calculation of PHR by means of the preceding method is impossible. A statement of fractional width at some other amplitude in the distribution (75 percent, for instance) could be made, but it should be stressed that this figure is not PHR, which is defined in terms of the fractional FWHM.

Electron multiplier sections of photomultipliers are sometimes operated in saturating mode for counting experiments. Single-electron distributions for saturated-mode operation may be characterized by a fractional FWHM but the associated value should not be termed PHR, and a statement should accompany the value to indicate that the measurement applies to nonlinear (saturated) operation.

Multiple-electron resolution (see Fig 2) is possible in certain photomultipliers. A multiple-electron display on the pulse-height analyzer can be obtained with a pulsed LED. The pulse-height analyzer should be gated on only during the time interval during which the photomultiplier output pulse is expected.

The intensity of the LED flashes can be varied while observing the distribution accumulating on the pulse-height analyzer display. The single-, double-, and other electron peaks may be built up to any relative height with respect to each other by varying the LED flash intensity.

An alternative to measuring the PHR of the 2nd-, 3rd-, … , nth-electron peak is to measure the peak-to-valley ratio of adjacent peaks of equal amplitudes. Thus the peak-to-valley ratio could be stated for the one-to-two valley and the two-to-three valley. This measurement is simpler to perform than a calculation of PHR and adequately characterizes multiple-electron resolution.

 Copyright © 1972 IEEE All Rights Reserved

Copyright The Institute of Electrical and Electronics Engineers, Inc.
Provided by IHS under license with IEEE
No reproduction or networking permitted without license from IHS Not for Resale

3.1.3 Pulse-Height-Stability Measurements.

In scintillation counting it is particularly important that the photomultiplier have very good pulse-height stability. There are two types of pulse-height stability tests which have been used to evaluate photomultipliers for this application: (1) a test of long-term drift in pulse-height amplitude measured at a constant counting rate; and (2) a measure of short-term pulse-height amplitude shift with change in counting rate.

In the time stability test, a pulse-height analyzer, a ^{137}Cs source, and an NaI(Tl) crystal are employed to measure the pulse height. The ^{137}Cs source is located along the major axis of the tube and crystal so that a count rate of about 1000 counts per second is obtained. The entire system is allowed to warm up under operating conditions for a period of [frac12] to 1 h before readings are recorded. Following this period of stabilization, the pulse height is recorded at 1-h intervals for a period of 16 h. The drift rate D_g is then calculated, in percent, as the mean gain deviation (MGD) of the series of pulse-height measurements as follows:

$$D_g = \frac{\sum_{i=1}^{i=n} |p - p_i|}{n} \cdot \frac{100}{\overline{p}}$$

where p is the mean pulse height averaged over n readings, p_i is the pulse height at the *ith* reading, and n is the total number of readings. Typical maximum MGD values for photomultipliers with high-stability CuBe dynodes are usually less than 1 percent when measured under the conditions specified above. Gain stability becomes particularly important when photopeaks produced by nuclear disintegrations of nearly equal energy are being differentiated.

In the count-rate stability test, the photomultiplier is first operated at about 10 000 counts per second. The photopeak counting rate is then decreased to approximately 1000 counts per second by increasing the source-to-crystal distance. The photopeak position is measured and compared with the last measurement made at a counting rate of approximately 10 000 per second. The count-rate stability is expressed as the percentage gain shift for the count-rate change. Example: Gain shift of –0.05 percent (10 000 to 1000 counts per second). Photomultipliers designed for pulse-height stability may be expected to have a value of no greater than 1-percent gain shift as measured by this count-rate stability test.

3.1.4 Pulse-Height Linearity.

Pulse-height linearity in photomultipliers is normally excellent over several orders of magnitude. Deviations from linearity are usually due to the following two effects: (1) space-charge effects associated with high-current pulses; and (2) resistive divider networks which cannot supply enough current to maintain the photomultiplier dynodes and other elements at constant operating potentials. Assuming that item (2) is not the limitation, the following measurement procedures outline two methods of determining the peak linear current that can be obtained from a photomultiplier. The first method is called the two-pulse technique and requires a pulsed light source and a neutral density filter that provides about 90-percent attenuation. The pulsewidth should not exceed 1 μs, and the duty cycle should not exceed 1 percent. The output pulses are displayed on an oscilloscope (or pulse-height analyzer) with and without the filter, and the ratio of the pulse heights is noted. Next the light source intensity is increased, while noting the ratio, until the ratio deviates from that obtained at the low intensity by 10 percent. The peak current associated with the larger pulse is termed peak linear current at the given operating voltage. Note that this measurement allows peak linear current measurement as a function of tube voltage.

A simpler, but less desirable, measurement requires only the pulsed light source and an oscilloscope or pulse-height analyzer. Tube voltage is initially low enough to ensure linear operation. A plot is made of the logarithm of the peak current versus the logarithm of the supply voltage. The peak current at which the curve deviates from an extrapolated straight line by 10 percent is the peak linear current. (This measurement cannot be performed if zener diodes are employed in the voltage divider.) This test only applies to photo-multipliers whose gain exhibits a simple power dependence on the applied voltage (see Fig 3).

Another simple and convenient test for the linearity of the entire system (photomultiplier, crystal, amplifier, and pulse-height analyzer) may be made by noting that the ^{60} Co high-energy peak is almost exactly twice the energy of the ^{137} Cs peak.

Copyright © 1972 IEEE All Rights Reserved

Copyright The Institute of Electrical and Electronics Engineers, Inc.
Provided by IHS under license with IEEE
No reproduction or networking permitted without license from IHS Not for Resale

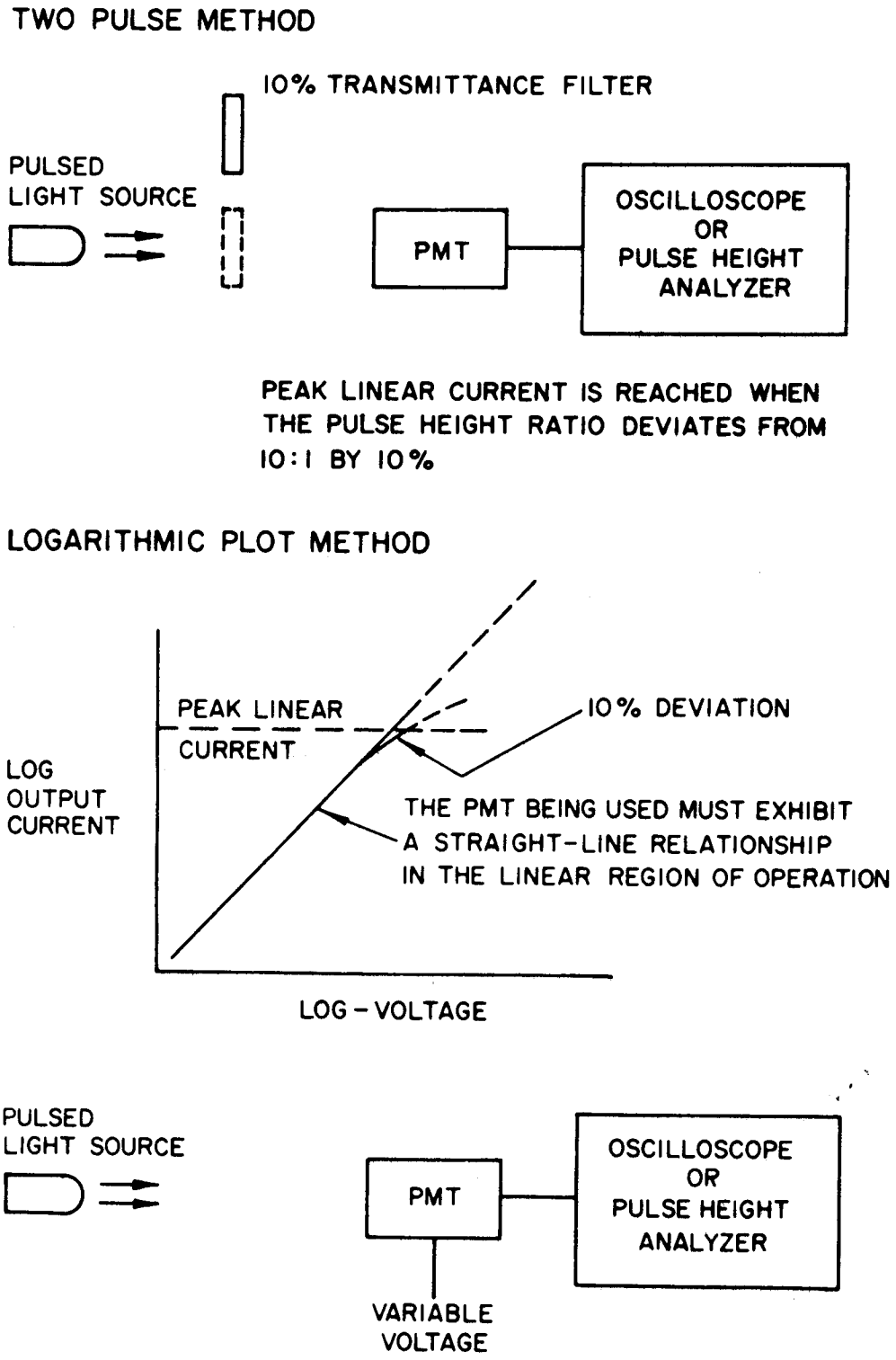

Figure 3—Pulse-Height Linearity

Copyright © 1972 IEEE All Rights Reserved

Copyright The Institute of Electrical and Electronics Engineers, Inc.
Provided by IHS under license with IEEE
No reproduction or networking permitted without license from IHS
Not for Resale

3.2 Spurious-Pulse Characteristics

PMTs exhibit a number of spurious-pulse characteristics. Three important examples are dark pulses, afterpulses, and tube scintillation pulses.

3.2.1 Dark Pulses.

Dark pulses are those pulses which are observed at the photomultiplier output when it is operated in total darkness and in the absence of external ionizing radiation. Dark pulses consist principally of single-electron events. The dark-pulse rate and distribution in amplitude is dependent upon the device type and operating history, that is, photocathode type and length of time since the last exposure to radiation of infrared or shorter wavelengths.

3.2.2 Afterpulses.

Afterpulses are spurious output pulses that are time correlated with the signal pulse. Afterpulses are generally of lesser amplitude than the initiating (signal) pulse and occur at nearly constant intervals after the initiating pulse. The severity of afterpulsing depends upon the device type and the past operating history.

3.2.3 Tube Scintillation Pulses.

Tube scintillation pulses are spurious pulses caused by light flashes that originate in the PMT structure, primarily in the faceplate. They are usually produced by an interaction between luminescent centers within the glass and radiation of sufficient energy to produce a scintillation. The radiation may be due to residual activity in the glass itself, or due to external sources or natural background radiation. Cosmic ray events are a common example of externally induced scintillation pulses. Cerenkov light is another source of these pulses.

3.3 Pulse Timing Characteristics

This section discusses delta-function light sources in order of increasing complexity and cost. In general, no single source is suitable for all photomultiplier time measurements. Applicable sources are discussed in 3.4.

3.3.1 Light-Emitting Diodes

The light-emitting diode (LED) is a very inexpensive delta-function light source.[1] Rise time varies from approximately 500 ps to 5 ns, depending upon chip mounting technique, material, and number of photons per flash. The fall times are approximately equal to the rise times. Note that minimum rise times can only be obtained with a delta-function current pulse. The rise time associated with a step function is considerably greater for all LEDs. (See Fig 4.)

The light output can be varied from approximately 1 photon per pulse to over 1×10^5 photons per pulse. However, rise time begins to increase when the intensity exceeds a few hundred photons per pulse.

Pulse generators for LEDs may consist of mercury-switch pulsers or avalanche transistor pulsers using either capacitors or charge lines for energy storage. Repetition rates of 400 Hz for a mercury-switch pulser and 10 kHz for avalanche transistor pulsers are typical. A trigger signal may be derived from either type of pulser to mark the occurrence of a light flash.

[1]Suitable diodes include the red-emitting Monsanto MV10A3 (peak emission at 670 nm) diode and the yellow-emitting Ferranti XP20 series diodes. Typical rise times are of the order of 500 ps for light flashes corresponding to less than 100 photons.

Copyright © 1972 IEEE All Rights Reserved

--`,,`-`-`,,`,,`,`,,`---

Copyright The Institute of Electrical and Electronics Engineers, Inc.
Provided by IHS under license with IEEE
No reproduction or networking permitted without license from IHS Not for Resale

3.3.2 Spark Light Sources

The mercury-wetted relay spark source has long been used for photomultiplier time measurements. The rise time is about 500 ps, and the fall time is somewhat greater, being lengthened by an exponential-like tail that may persist for a few nanoseconds. Multiple pulses are often generated approximately 1 μs after the primary pulse; these pulses usually do not interfere with measurements. A mercury switch with a charge line is commonly used for the pulse generator, and rates of 400 Hz are typical. A charge line is commonly used for the current source. A trigger signal may be derived to mark the occurrence of the light flash.

Light output may be varied from approximately 1 photon per pulse to over 1×10^5 Photons per pulse. The spectral distribution includes the ultraviolet, and the spark appears bluish to the eye. The light is useful in obtaining photoemission from photocathodes as well as from dynodes. Photoemission by spark source excitation can be obtained from BeO and GaP(Cs) dynodes. However, at the higher intensities needed for these measurements, the spark source rise time may increase to over 1 ns, and the fall time may exceed 10 ns. High-pressure spark-gap devices of equivalent performance are also suitable.

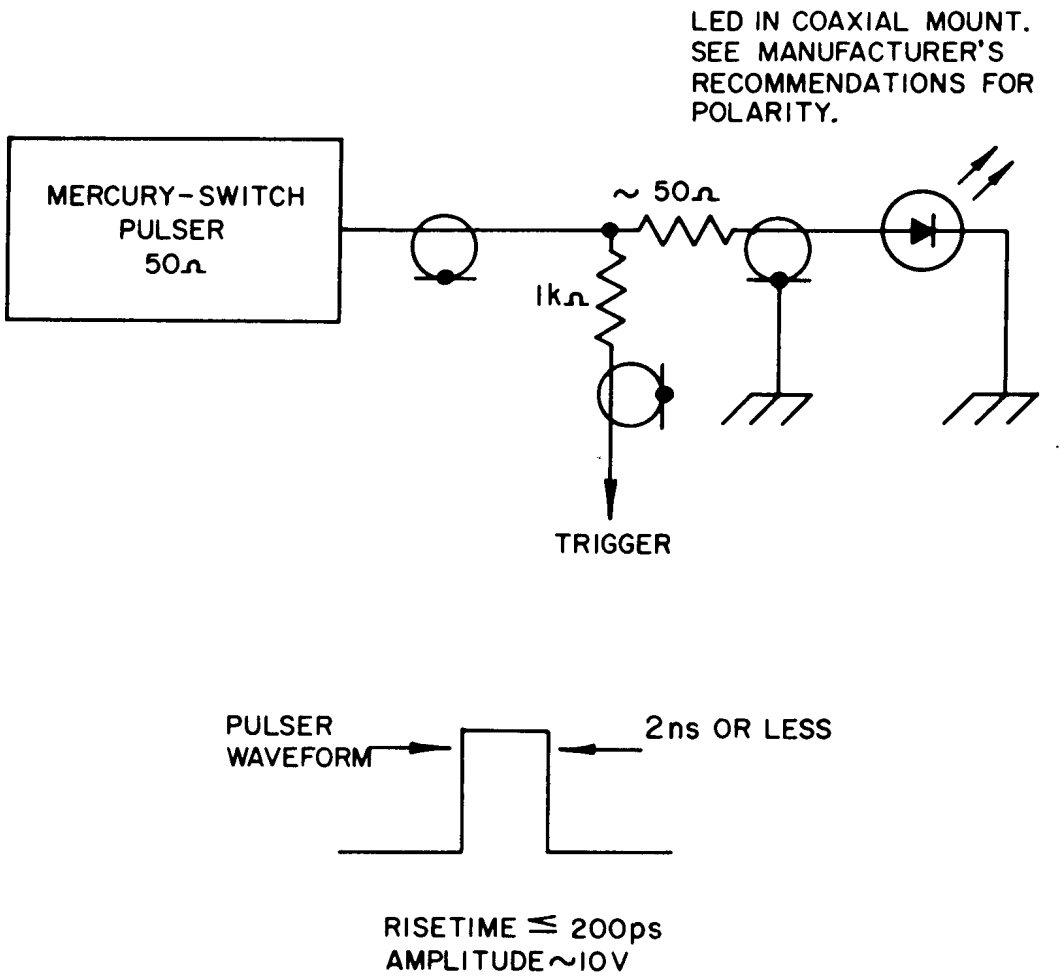

Figure 4—LED Circuitry

Copyright © 1972 IEEE All Rights Reserved

Copyright The Institute of Electrical and Electronics Engineers, Inc.
Provided by IHS under license with IEEE
No reproduction or networking permitted without license from IHS
Not for Resale

3.3.3 Cerenkov Source

The Cerenkov light source relies on energetic particles from a small nuclear radiation source creating Cerenkov light in a high index of refraction medium. A beta source such as ^{90} Sr may be used with a thin piece of plastic (such as Lucite).

The rate is governed by the radiation source intensity, and the flashes are random in time. No electrical trigger is available to mark the occurrence of a flash.

3.3.4 Scintillator Light Source

The scintillator light source utilizes a fast scintillator and a nuclear radiation source to provide a light flash with a fall time longer than its rise time. A typical rise time is 400 ps (for Naton 136 and a ^{60}Co source). The fall time (for Naton 136) is approximately 1.4 ns with a characteristic long tail of several nanoseconds.

The rate of flashing is determined by the source intensity, and the flashes are random in time. No electrical trigger is available to mark the occurrence of a light flash.

3.3.5 Mode-Locked Laser

Mode locking is achieved by applying a time-varying intensity or phase perturbation to the continuous-wave light signal within a laser cavity. When the perturbing frequency matches the resonant frequency $C/2L$ of the cavity, where C is the velocity of light and L is the cavity length, the modes are brought into phase, resulting in intense light pulses occurring at a rate $C/2L$.

He-Ne (633 nm), Ar (588 nm and 514.5 nm) and Nd: YAG (106 μm) lasers may be mode locked. Pulsewidths for the He-Ne laser are of the order of 1 ns, and pulsewidths for the Ar laser are approximately 250 ps, while pulsewidths for a Nd: YAG system range from about 1 to 50 ps. The shorter pulsewidths obtainable from a Nd: YAG system make this system most useful for high-speed time measurements on fast photomultipliers.

Repetition rates for a Nd: YAG system are usually in the range of 75 - 200 MHz. Even the 75-MHz rate may be too fast for measurements on some photomultipliers. Lower repetition rates can be obtained by using fast electrooptical modulators to gate off unwanted pulses. An electrical trigger signal is available to mark the occurrence of each pulse.

The 1.06-μm radiation can be doubled in frequency by employing a nonlinear crystal to obtain pulses at 532 nm (green). These picosecond pulses are very intense (10^8 photons per pulse) and may be used to obtain photoemission from GaP(Cs) dynodes, as well as from photocathodes. The mode-locked laser can be used to probe the surface of a dynode to map its spatial timing characteristics.

3.4 Measurement Techniques

3.4.1 Rise-Time Measurements

3.4.1.1 Device Rise Time

Device rise time (DRT) is the mean time difference between the 10- and 90-percent amplitude points on the output waveform for full cathode illumination and delta-function excitation. DRT is measured with a repetitive delta-function light source and a sampling oscilloscope. The trigger signal for the oscilloscope may be derived from the device output pulse, so that light sources such as the scintillator light source may be employed.

Copyright © 1972 IEEE All Rights Reserved

Copyright The Institute of Electrical and Electronics Engineers, Inc.
Provided by IHS under license with IEEE
No reproduction or networking permitted without license from IHS Not for Resale

The rise time as measured from an oscilloscope photograph must be corrected for the finite rise times of the individual elements comprising the system. DRT is usually calculated from the relation

$$t_d = \sqrt{(t_o)^2 - (t_s)^2 - (t_p)^2 - (t_1)^2 - (t_c)^2}$$

where t_d is the DRT, t_O is the observed rise time, t_s is the source rise time, t_p is the splitter rise time, t_1 is the line rise time, and t_c is the oscilloscope rise time, under the assumption that the elements behave as Gaussian elements. This assumption is not valid, however, for the case of the delay-line rise time t_1 and the oscilloscope rise time, t_c. If a reactive signal splitter is employed (such as a transformer-coupled TEE), it will not behave as a Gaussian element.

sBecause of the uncertainties involved in correcting for the finite rise times of the individual elements, it is best to choose these elements such that their individual rise times do not exceed one third that of the DRT. The rise times of the elements comprising the measurement system shall be stated. Example: GaAsP LED light source with rise time less than 600 ps, signal-delay-line rise time of 100 ps as measured with a time-domain reflectometer, sampling oscilloscope rise time of 50 ps. A time-domain reflectometer should be employed to ensure that the system, including photomultiplier socket, exhibits minimum rise-time degradation. A time-domain reflectometer is a device that characterizes the impedance of a transmission line by sending a pulse down the line and observing the reflected pulse.

In stating the rise-time results, all relevant system parameters should be recorded, for example, number of photoelectrons per pulse, supply voltage, bleeder configuration, photomultiplier gain, and peak output current.

The spectral distribution of the light source shall be given since photoelectron energies vary with excitation wavelength, and differences in photoelectron energies can produce different measured time parameters.

The saturated anode current rise time is obtained as the time between the 10-and 90-, percent points on the leading edge of the anode current waveform when the photocathode is so illuminated as to produce pulses of saturation amplitude. The value of the saturated current shall also be stated.

3.4.1.2 Reflected-Pulse Rise Time

Reflected-pulse rise time is that rise time measured with a time-domain reflectometer connected to the anode output connector of the device. The time-domain reflectometer should have a rise time that is short (at most one third) compared with the reflected-pulse rise time.

If the device does not employ a coaxial output connector, then the transition section between the coaxial cable and the device anode output terminals should be fabricated according to the manufacturer's instructions. The reflected-pulse rise time of the associated socket should also be stated.

3.4.1.3 Single-Electron Rise Time

SERT (Single-electron rise time) is that anode-pulse rise time associated with single electrons originating at the photocathode. Measurement of SERT requires a photomultiplier having an adequate gain so that the single-electron event may be viewed on a sampling oscilloscope. (See Fig 5.)

A pulsed light source may be attenuated so that the average yield per pulse is much less than one photoelectron. Photocathode dark emission may also be used as a source of single electrons. If the dark current is too low, a dc light may be used to increase the single-electron emission rate. The use of a dc (continuous) light is required to ensure that the output pulses are single electron initiated. When dark current (or attenuated dc light) is used as a source of single electrons, the trigger signal for the sampling oscilloscope must be derived from the anode output pulse. A signal pick-off probe may be used, provided its rise time is small (one third or less) compared to the anode-pulse rise time. A resistive divider is suitable and may be fabricated in a manner to produce a rise time of less than 100 ps. Delay lines with internal trigger pick-offs (such as a Tektronix 7M11) are also available.

Copyright © 1972 IEEE All Rights Reserved

Copyright The Institute of Electrical and Electronics Engineers, Inc.
Provided by IHS under license with IEEE
No reproduction or networking permitted without license from IHS Not for Resale

If the single-electron resolution of the device being measured is less than approximately 200 percent, considerable difficulty may be experienced in setting the oscilloscope trigger threshold level, and measurements may be misleading.

A description of the instrumentation and techniques used should accompany SERT data.

3.4.2 Fall-Time Measurements

Fall-time measurements are made in accord with procedures outlined in 3.4.1. Device fall time is the mean time difference between the 90- and 10-percent amplitude points on the trailing edge of the output-pulse waveform for full cathode illumination and delta-function excitation. The light source used should exhibit a fall time that is less than one third the device fall time.

Single-electron fall time is measured as outlined in 3.4.1.3.

3.4.3 Transit-Time Measurements

3.4.3.1 Device Transit Time

Device transit-time measurements require a delta-function light source having a marker pulse output synchronized in time with the light flash and a sampling oscilloscope. The device transit time is the time difference between the incidence of the light upon the photocathode (full illumination) and the occurrence of the half-amplitude point on the output-pulse leading edge.

The marker pulse and output pulse can both be positioned on the oscilloscope display by proper choice of delay cables. The device transit time is then calculated from knowledge of the delay-line delay times in the system, the time difference between marker pulse and output pulse on the oscilloscope, and the optical delay (length/C) between source and photocathode. Delay times of cables can be measured accurately with a time-domain reflectometer. Since device transit time varies with electrode potentials, these data must be specified.

3.4.3.2 Photocathode Transit Time

Photocathode transit time is the time required for a packet of photoelectrons to travel from the photocathode to the first dynode. This measurement requires a delta-function light source. The device configuration must allow photoexcitation of the first dynode, as well as the photocathode, by the same source. The light source must therefore have a spectrum that provides photoemission from the first dynode. The value of photocathode transit time is obtained by first measuring device transit time and then biasing off the photocathode to allow measurement of the combined multiplier transit time and output-structure transit time. The optical delay between photocathode and first dynode must be considered in the calculation of photocathode transit time. (See Fig 6.)

The photocathode transit time is measured with full cathode illumination. The photocathode must be biased off in such a manner that the electric field pattern in the electron multiplier structure is not altered from its proper operating distribution. A suppression bias of 10 V is usually sufficient. Care must be exercised to insure that photoemission from all surfaces other than the first dynode is suppressed.

Copyright © 1972 IEEE All Rights Reserved

Copyright The Institute of Electrical and Electronics Engineers, Inc.
Provided by IHS under license with IEEE
No reproduction or networking permitted without license from IHS Not for Resale

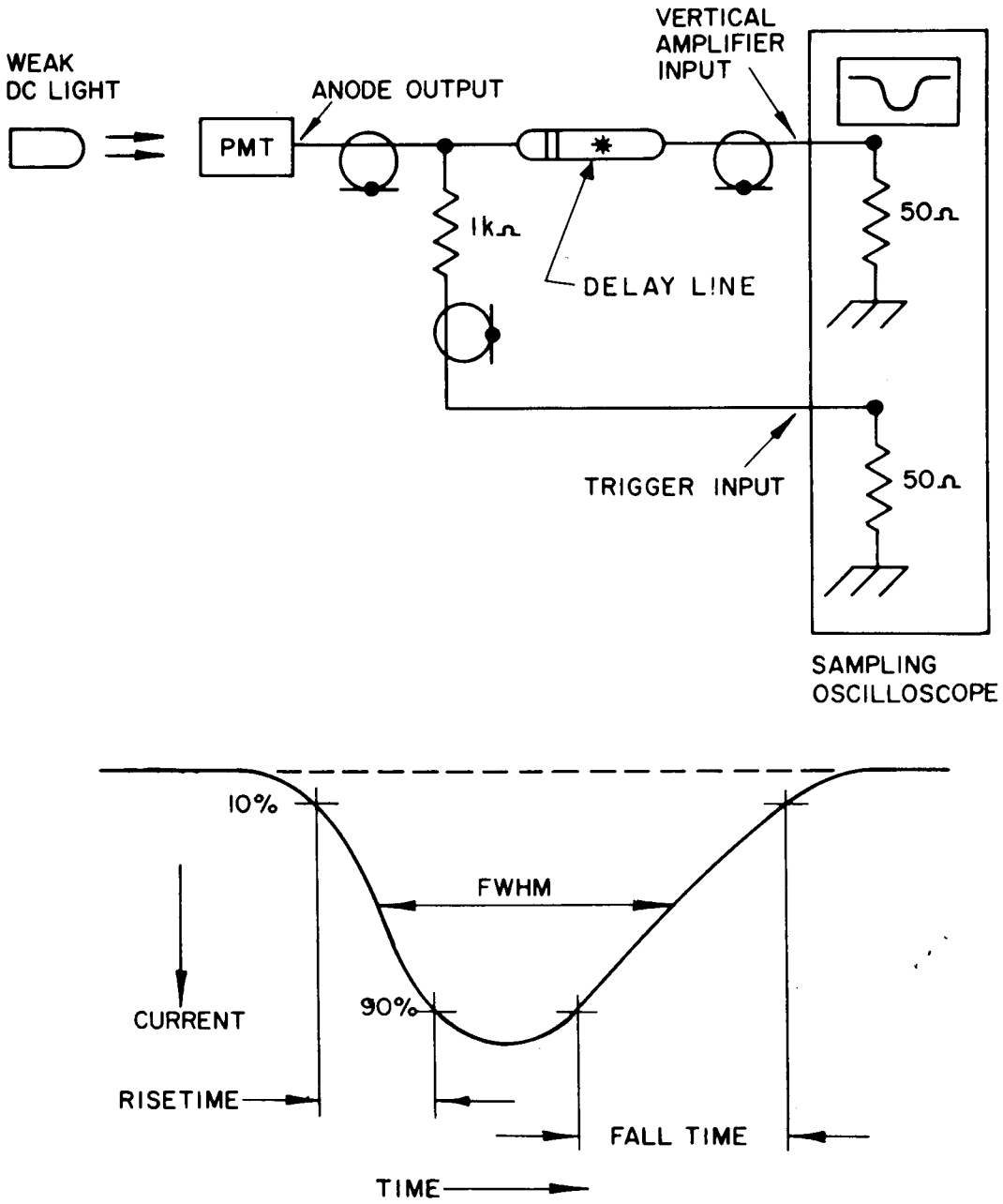

Figure 5—Single-Electron Rise Time

Copyright © 1972 IEEE All Rights Reserved

Copyright The Institute of Electrical and Electronics Engineers, Inc.
Provided by IHS under license with IEEE
No reproduction or networking permitted without license from IHS
Not for Resale

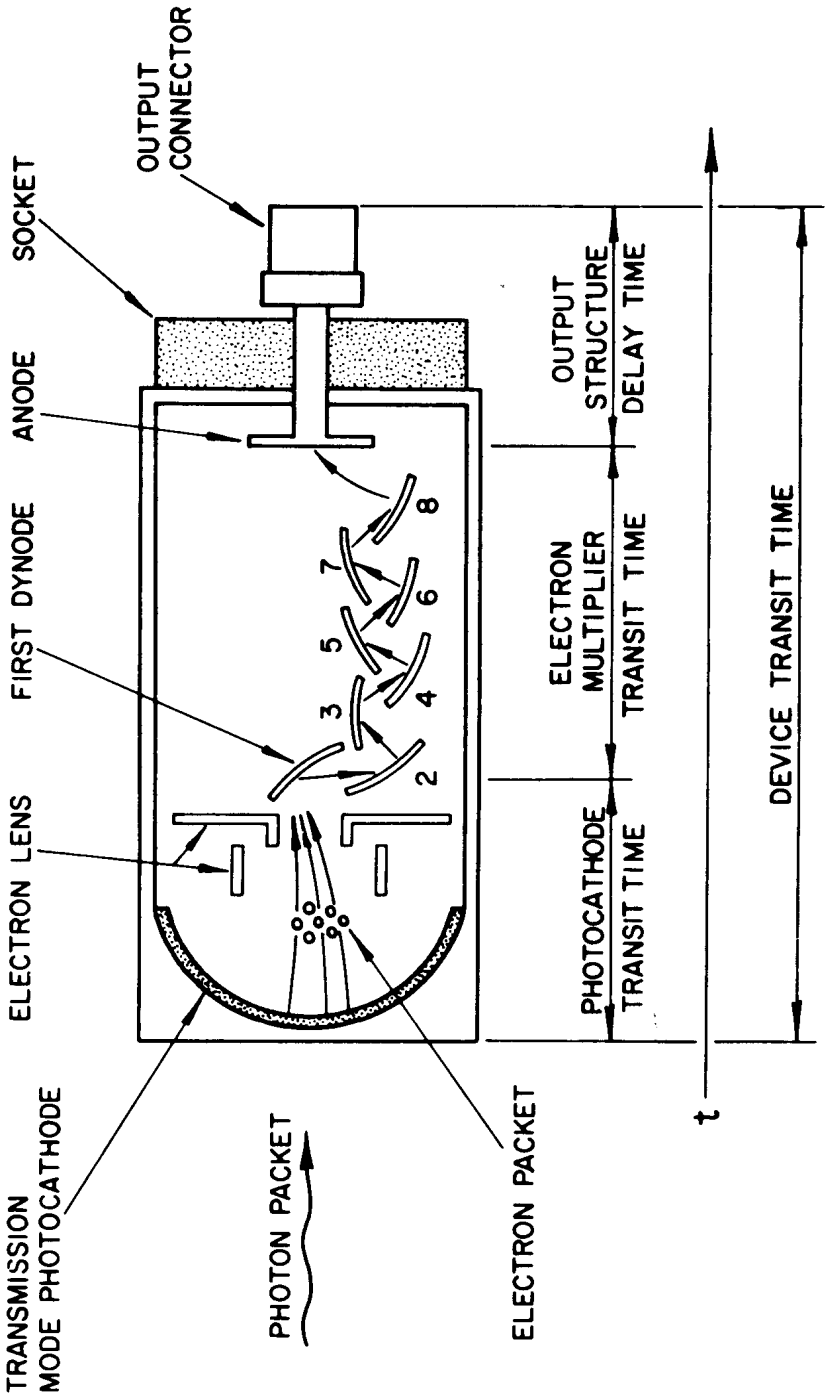

Figure 6—Photomultiplier Transit-Time Measurements

Copyright © 1972 IEEE All Rights Reserved

Copyright The Institute of Electrical and Electronics Engineers, Inc.
Provided by IHS under license with IEEE
No reproduction or networking permitted without license from IHS
Not for Resale

3.4.3.3 Multiplier Transit Time

Multiplier transit time is the time delay between an electron packet leaving the first dynode and the multiplied packet striking the anode of the device. Multiplier transit time is determined by first measuring the combined quantity, multiplier transit time and output-structure transit time and then subtracting the measured value of output-structure transit time.

3.4.3.4 Output-Structure Transit Time

Output-structure transit time is the time delay between an electron packet arriving at the anode and the occurrence of the half-amplitude point of the output pulse at the output connector. The value of output-structure transit time is measured with a time-domain reflectometer. If a wired socket is part of the external output structure, its delay time shall be specified along with the delay time of the internal output structure of the photomultiplier. Example: Output-structure transit time is 1.00 ns with 0.85-ns delay due to the supplied socket and coaxial cable assembly.

3.4.4 Photocathode Transit-Time-Difference Measurements

Photocathode transit-time difference is the difference in transit time between electrons leaving the center of the photocathode and electrons leaving the photocathode at some specified point on a designated diameter. It can be measured by using a delta-function light source with a trigger signal to designate the occurrence of the flash.

Delay lines are chosen such that the trigger marker and the output pulse are displayed on the sampling oscilloscope for a small spot illuminating the center of the photocathode. The spot is then displaced along a designated diameter, and the time shift with respect to the center-spot reference is stated as a function of radius. The half-amplitude should be used as a reference.

3.4.5 Transit-Time-Spread Measurements

Transit-time-spread measurements are made to determine the time-resolving ability of the device. In contrast to other time measurements, transit-time-spread measurements are made with the aid of a time-to-amplitude converter (TAC) instead of a sampling oscilloscope. The measurement involves recording the distribution of a statistically significant number of pulses, which, by virtue of the statistical nature of the photomultiplication process, arrive at varying times after the occurrence of the initiating light flash.

Device transit-time spread, also called device time resolution, can be measured for a single photomultiplier and also for a pair of photomultipliers. Both measurements are useful and are described below. In performing these measurements a number of techniques are available to designate the instant in time at which the output pulse reaches a given amplitude. The recommended technique utilizes constant-fraction timing since this leads to the best timing performance for a wide range of pulse amplitudes. In a single-tube time-resolution measurement the trigger signal from the light source supplies the “start” signal to the TAC; the device output signal obtained from the constant-fraction timing discriminator supplies the “stop” signal. A statistically large number of TAC pulses are sorted by a multichannel analyzer, and the resolution is given by the FWHM of the time spectrum. The FWHM should span at least eight channels, and at least 50 000 events should be contained within the distribution. (See Fig 7.)

The resolution should be stated for full cathode illumination. Since resolution improves with number of photoelectrons per pulse, the average value of photoelectrons per pulse must be stated. A particularly useful measurement is the device time resolution for single photoelectrons.

Single-electron time-resolution measurements using a single photomultiplier require a delta-function light source (see 3.3) with an electrical trigger signal to mark the occurrence of the flash, a TAC, and a pulse-height analyzer. The measurement (Fig 8) is valid only for photomultipliers having a value of SEPHR of 200 percent or less.

The single-electron spectrum of the photomultiplier under test must first be obtained on the pulse-height analyzer by employing a strongly attenuated dc light. Next the delta-function light source must be attenuated so that the most

 Copyright © 1972 IEEE All Rights Reserved

Copyright The Institute of Electrical and Electronics Engineers, Inc.
Provided by IHS under license with IEEE
No reproduction or networking permitted without license from IHS Not for Resale

probable number of observed photoelectrons per flash is equal to one. The ratio of one-photoelectron events to two-photoelectron events should be no less than 100 to 1 as monitored with the pulse-height analyzer. This in turn means that for a significant fraction of the flashes no photoelectron will be liberated. (An upper-level discriminator could be employed to discriminate against two-electron events; however, the setting of the discriminator level is critical, and therefore this alternate method is not preferred.)

Copyright © 1972 IEEE All Rights Reserved

Copyright The Institute of Electrical and Electronics Engineers, Inc.
Provided by IHS under license with IEEE
No reproduction or networking permitted without license from IHS
Not for Resale

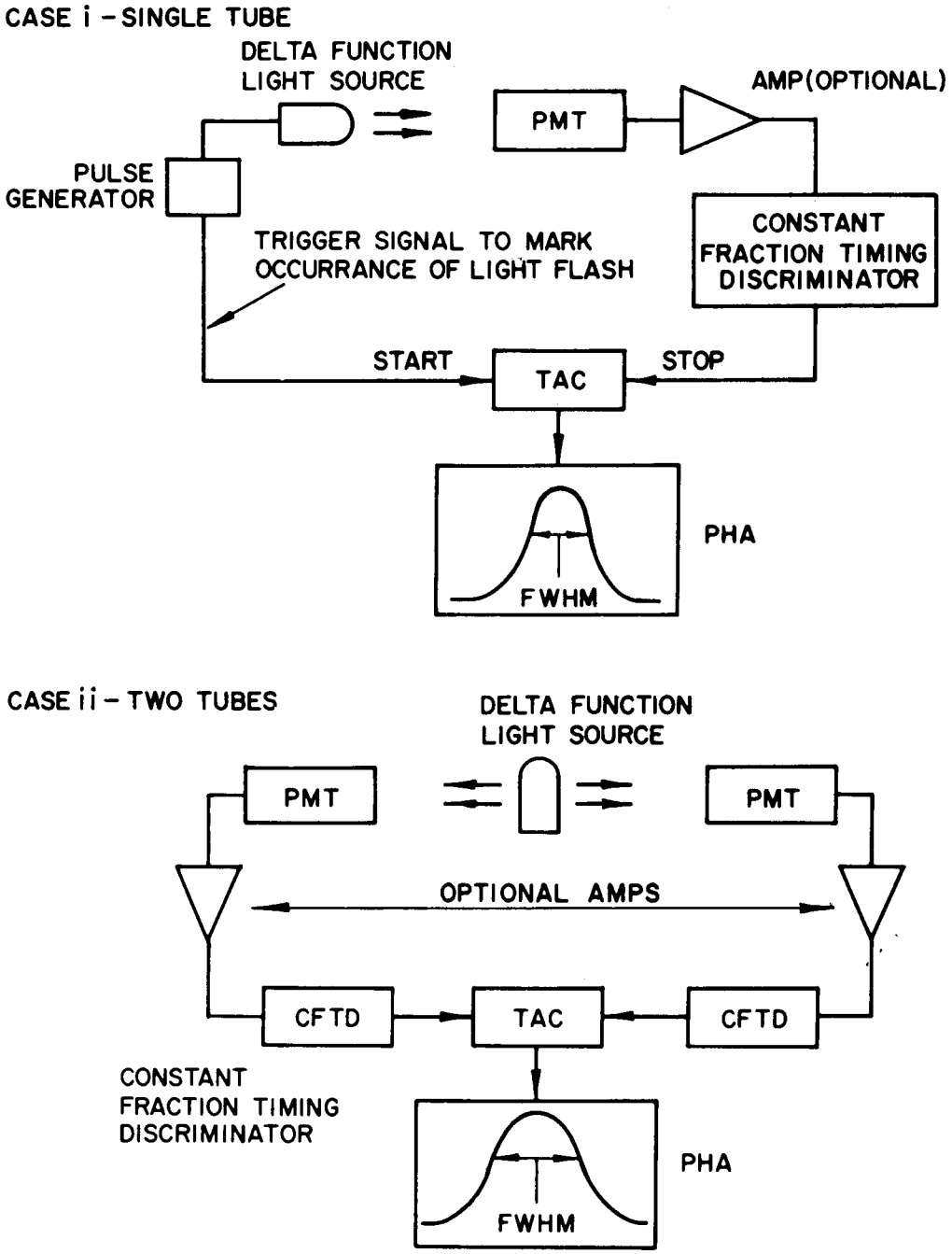

Figure 7—Transit-Time Spread

Copyright © 1972 IEEE All Rights Reserved

Copyright The Institute of Electrical and Electronics Engineers, Inc.
Provided by IHS under license with IEEE
No reproduction or networking permitted without license from IHS
Not for Resale

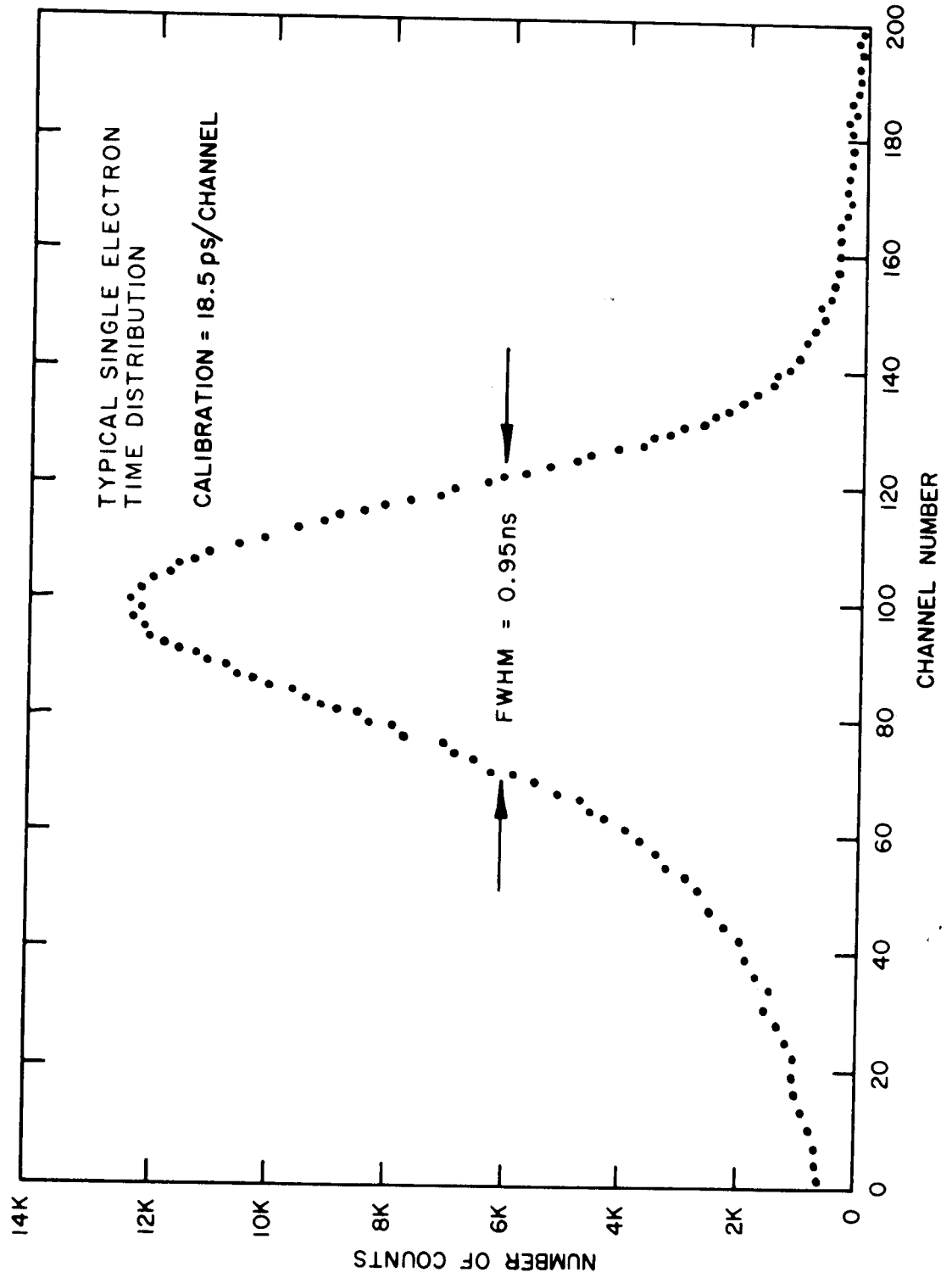

Figure 8—Single-Photoelectron time Resolution

Copyright © 1972 IEEE All Rights Reserved

Copyright The Institute of Electrical and Electronics Engineers, Inc.
Provided by IHS under license with IEEE
No reproduction or networking permitted without license from IHS
Not for Resale

The TAC shall be calibrated according to the manufacturer's procedure. Such procedure usually includes a calibration of the time base by noting the displacement in time of a large number of events when an accurately known value of delay cable is introduced into the start or stop line.

The time-resolution distribution shall contain at least 50 000 events under the FWHM, and the FWHM shall span at least eight channels.

A second measurement of device time resolution involves the use of two photomultipliers viewing a common delta-function light source (see 3.3). This technique allows one photomultiplier to activate the TAC “start,” while the other activates the TAC “stop.” Note that this technique does not require a trigger signal from the source, so that either Cerenkov or scintillation sources can be employed. As with the single-tube measurement, resolution improves with the number of photoelectrons per pulse, so this figure must be stated. The FWHM of the distribution shall be stated, and the instrumentation shall be described. Calibration of the instrumentation shall be carried out according to the manufacturer's methods. (See also previous discussion.)

4. Test Conditions for Photomultipliers

Test conditions for photomultipliers are specified in terms of environmental conditions that must be met to enable accurate measurements to be made of the photomultiplier parameters discussed in the previous sections.

The test enclosure must be free of detectable light leaks. This can be verified by half-hour photon counting periods with and without bright ambient light incident on the enclosure.

The PMT should be stored in darkness for several hours prior to measurement to avoid phosphorescence effects. Cleanliness of the PMT glass and sockets is essential in preventing external noise effects. Any material near the photocathode must be at photocathode potential to prevent electroluminescence of the envelope and electrolysis of the glass.

The PMT should be degaussed before using, and a magnetic shield should be employed. Note that even the earth's magnetic field is of sufficient strength to influence measurements. Tube temperature should preferably be maintained constant within ±2°C in the range 19 to 25° C. This is important in instances where the voltage divider may raise the temperature of the test enclosure.

5. Test Instrumentation

This section lists the instrumentation required to perform the measurements described in 3.4. The list is not all-inclusive, but instead serves as a guide to the type of instrumentation that is required.

All measurements require high-voltage power supplies in the range of 0 to 3 or 4 kV, with 5- to 30-mA current capability. Regulation should be 0.01 percent or better, and ripple and noise should be no more than a few millivolts.

For the tests of 3.1, the following are needed: NaI(Tl) crystals, ^{137}Cs and ^{55}Fe sources, charge-sensitive preamplifier, linear amplifier, pulse-height analyzer, precision pulser, LED, and pulser for LED.

Instrumentation for measurements in 3.2 includes the preceding, plus a TAC.

Instrumentation for 3.3 and 3.4 measurements includes fast linear amplifiers with pulse-shaping circuitry, sampling oscilloscope, delta-function light source, Cerenkov source or mode-locked laser, TAC, pulse-height analyzer, constant-fraction timing discriminator (or other fast timing discriminator).

Copyright © 1972 IEEE All Rights Reserved

Copyright The Institute of Electrical and Electronics Engineers, Inc.
Provided by IHS under license with IEEE
No reproduction or networking permitted without license from IHS Not for Resale

6. Glossary for Scintillation Counting Field

accelerating electrode: An electrode to which a potential is applied to increase the velocity of the electrons.

accelerating grid: See **accelerating electrode.**

afterpulse: A spurious pulse induced in a photomultiplier by a previous pulse.

anode (electron tubes): An electrode through which a principal stream of electrons leaves the interelectrode space.

anode-reflected-pulse rise time: The rise time of a pulse reflected from the anode.

NOTE — This time can be measured with a time-domain reflectometer.

anticoincidence circuit: A circuit that produces a specified output signal when one (frequently predesignated) of two inputs receives a signal and the other receives no signal within an assigned time interval.

background counts (in radiation counters): Counts caused by ionizing radiation coming from sources other than that to be measured.

background response (in radiation detectors): Response caused by ionizing radiation coming from sources other than that to be measured.

CHANHI: Abbreviation for upper channel corresponding to the half-amplitude point of a distribution.

CHANLO: Abbreviation for lower channel corresponding to the half-amplitude point of a distribution.

coincidence circuit: A circuit that produces a specified output signal when and only when a specified number (two or more) or a specified combination of input terminals receives signals within an assigned time interval.

count (in radiation counters): A single response of the counting system.

counting efficiency (scintillation counters): The ratio of(1) the average number of photons or particles of ionizing radiation that produce counts to (2) the average number incident on the sensitive area.

count-rate meter: A device that indicates the time rate of occurrence of input pulses averaged over a time interval.

current amplification (photomultipliers): The ratio of (1) the signal output current to (2) the photoelectric signal current from the photocathode.

dark current (phototubes): That component of output current remaining when ionizing radiation and optical photons are absent.

dark pulses: Pulses observed at the output electrode when the photomultiplier is operated in total darkness. These pulses are due primarily to electrons originating at the photocathode.

decelerating electrode: An electrode to which a potential is applied to decrease the velocity of the electrons.

decelerating grid: See **decelerating electrode.**

delay circuit: A circuit that produces an output signal that is intentionally delayed with respect to the input signal.

delay coincidence circuit: A coincidence circuit that is actuated by two pulses, one of which is delayed by a specified time interval with respect to the other.

Copyright © 1972 IEEE All Rights Reserved

Copyright The Institute of Electrical and Electronics Engineers, Inc.
Provided by IHS under license with IEEE
No reproduction or networking permitted without license from IHS Not for Resale

delay line: A transmission line for introducing signal delay.

delta-function light source: A light source whose rise time, fall time, and FWHM are no more than one third of the corresponding parameters of the output pulse of the photomultiplier.

device rise time: The mean time difference between the 10- and 90-percent amplitude points on the output waveform for full cathode illumination and delta-function excitation. DRT is measured with a repetitive delta-function light source and a sampling oscilloscope. The trigger signal for the oscilloscope may be derived from the device output pulse, so that light sources such as the scintillator light source may be employed.

discriminator, amplitude: See **discriminator, pulse-height.**

discriminator, constant-fraction pulse-height: A pulse-height discriminator in which the threshold changes with input amplitude in such a way that the triggering point corresponds to a constant fraction of the input pulse height.

discriminator, pulse-height: A circuit that produces a specified output signal if and only if it receives an input pulse whose amplitude exceeds an assigned value.

DRT: See **device rise time.**

dynode: An electrode which performs a useful function, such as current amplification, by means of secondary emission.

electron multiplier: That portion of the photomultiplier consisting of dynodes which produce current amplification by secondary electron emission.

electron multiplier transit time: That portion of photomultiplier transit time corresponding to the time delay between an electron packet leaving the first dynode and the multiplied packet striking the anode.

electron resolution: The ability of the electron multiplier section of the photomultiplier to resolve inputs consisting of n and n+1 electrons. This may be expressed as a fractional FWHM of the nth peak, or as the peak to valley ratio of the nth peak to the valley between the nth and $n \times 1$th peaks.

focusing electrode: An electrode whose potential is adjusted to control the cross-sectional area of the electron beam.

focusing grid: See *focusing electrode*.

full width at half maximum: The full width of a distribution measured at half the maximum ordinate. For a normal distribution it is equal to 2(2 ln 2) 1/2 times the standard deviation σ.

FWHM: See **full width at half maximum.**

gain (photomultipliers): See **current amplification.**

ionizing radiation (scintillation counting): Particles or photons of sufficient energy to produce ionization in interactions with matter.

light guide: See **light pipe.**

light pipe: An optical transmission element that utilizes unfocused transmission and reflection to reduce photon losses.

MCA: See **multichannel analyzer.**

Copyright © 1972 IEEE All Rights Reserved

--`,,`-`-`,,`,,`,`,,`---

Copyright The Institute of Electrical and Electronics Engineers, Inc.
Provided by IHS under license with IEEE
No reproduction or networking permitted without license from IHS Not for Resale

multichannel analyzer: See **pulse-height analyzer.**

multiplier phototube: See **photomultiplier.**

noise (phototubes): The random output that limits the minimum observable signal from the phototube.

opaque photocathode: See **reflection-mode photocathode.**

optical photons (scintillation counting): Photons with energies corresponding to wavelengths between approximately 120=1800 m.

optical pulse: A pulse of optical photons.

output-structure transit time: That portion of the photomultiplier transit time occurring within the output structure.

PEAK: Channel number corresponding to the peak of a distribution.

PHA: See **pulse-height analyzer.**

photocathode: An electrode used for obtaining photoelectric emission when irradiated.

photocathode blue response: The photoemission current produced by a specified luminous flux from a tungsten filament lamp at 2854 K color temperature when the flux is filtered by a CS 5-58 blue filter of half stock thickness (1.75-2.25 mm). This parameter is useful in characterizing response to scintillation counting sources.

photocathode luminous sensitivity: See **sensitivity, cathode luminous.**

photocathode radiant sensitivity: See **sensitivity, cathode radiant.**

photocathode spectral sensitivity characteristic: See **spectral sensitivity characteristic (photocathode).**

photocathode transit time: That portion of the photomultiplier transit time corresponding to the time for photoelectrons to travel from the photocathode to the first dynode.

photocathode transit-time difference: The difference in transit time between electrons leaving the center of the photocathode and electrons leaving the photocathode at some specified point on a designated diameter.

photocell: A solid-state photosensitive electron device in which use is made of the variation of the current-voltage characteristic as a function of incident radiation.

photomultiplier (photomultiplier tube): A phototube with one or more dynodes between its photocathode and output electrode.

photomultiplier delay time: See **photomultiplier transit time.**

photomultiplier transit time: The time difference between the incidence of a delta-function light pulse on the photocathode of the photomultiplier and the occurrence of the half-amplitude point on the output-pulse leading edge.

photomultiplier tube: See **photomultiplier.**

photon emission spectrum, scintillator material: The relative numbers of optical photons emitted per unit wavelength as a function of wavelength interval. The emission spectrum may also be given in alternative units such as wavenumber, photon energies, frequency, and so on.

Copyright © 1972 IEEE All Rights Reserved

Copyright The Institute of Electrical and Electronics Engineers, Inc.
Provided by IHS under license with IEEE
No reproduction or networking permitted without license from IHS Not for Resale

phototube: An electron tube that contains a photocathode and has an output depending at every instant on the total photoelectric emission from the irradiated area of the photocathode.

PHR: See **pulse-height resolution.**

PMT: See **photomultiplier.**

pulse amplifier: An amplifier designed specifically for the amplification of electrical pulses.

pulse counter: A device that tallies input pulses.

pulse duration: The time interval between the first and last instants at which the instantaneous amplitude reaches a stated fraction of the peak pulse amplitude.

pulse fall time: The interval between the instants at which the instantaneous amplitude last reaches specified upper and lower limits, namely, 90 percent and 10 percent of the peak pulse amplitude unless otherwise stated.

pulse-height analyzer: An instrument capable of indicating the number or rate of occurrence of pulses falling within each of one or more specified amplitude ranges.

pulse-height resolution: The fractional full width at half maximum of the pulse-height distribution curve (FWHM/$A1$) where $A1$ is the pulse height corresponding to the maximum of the distribution curve. In scintillation spectroscopy, it is customary to state PHR as a percentage.

pulse-pair resolution (photomultiplier): The time interval between two equal-amplitude delta-function optical pulses such that the valley between the two corresponding anode pulses falls to fifty percent of the peak amplitude.

pulse rise time: The interval between the instants at which the instantaneous amplitude first reaches specified lower and upper limits, namely, 10 percent and 90 percent of the peak pulse amplitude unless otherwise stated.

pulse shaper: A circuit that yields a desired pulse shape for a given input waveform.

pulse stretcher: A pulse shaper that produces an output pulse whose duration is greater than that of the input pulse and whose amplitude is proportional to that of the peak amplitude of the input pulse.

quantum efficiency (photocathode): The average number of electrons photoelectrically emitted from the photocathode per incident photon of a given wavelength.

NOTE — The quantum efficiency may be a function of the angle of incidence and of the direction of polarization of the incident radiation.

reflection mode photocathode: A photocathode wherein photoelectrons are emitted from the same surface as that on which the photons are incident.

resolving time (radiation counters): The minimum achievable pulse spacing between counts.

NOTE — This quantity is a property of the combination of the tube and recording circuit.

scintillation: The optical photons emitted as a result of the interaction of a particle or photon of ionizing radiation with a scintillator.

scintillation counter: The combination of scintillator, phototube (or photocell), and associated circuitry for detection and measurement of ionizing radiation.

Copyright © 1972 IEEE All Rights Reserved

Copyright The Institute of Electrical and Electronics Engineers, Inc.
Provided by IHS under license with IEEE
No reproduction or networking permitted without license from IHS
Not for Resale

scintillation-counter cesium resolution: The scintillation-counter energy resolution for the gamma ray or conversion electron from ^{137}Cs.

scintillation-counter energy resolution: The FWHM, in units of energy, of the scintillation counter spectrum at a stated energy.

scintillation decay time: The time required for the rate of emission of optical photons of a scintillation to decrease from 90 percent to 10 percent of its maximum value.

scintillation duration: The time interval from the emission of the first optical photon of a scintillation until 90 percent of the optical photons of the scintillation have been emitted.

scintillation rise time: The time required for the rate of emission of optical photons of a scintillation to increase from 10 percent to 90 percent of its maximum value.

scintillator: The body of scintillator material together with its container.

scintillator material: A material which emits optical photons in response to ionizing radiation.

NOTE — There are five major classes of scintillator materials, namely,

1) Inorganic crystals [for example, NaI(T) single crystals, ZnS(Ag) screens]
2) Organic crystals (for example, anthracene, *trans*-stilbene)
3) Solution scintillators: (a) liquid, (b) plastic, (c) glass
4) Gaseous scintillators
5) Cerenkov scintillators

scintillator photon distribution (in number): The statistical distribution of the number of optical photons produced in the scintillator by total absorption of monoenergetic particles. (See Fig 9.)

scintillator material total conversion efficiency: The ratio of the total energy of the optical photons emitted by a scintillator to the incident energy of a particle or photon of ionizing radiation. (The efficiency is generally a function of the type and energy of the ionizing radiation.)

semitransparent photocathode: See **transmission mode.**

sensitivity, cathode luminous (photocathodes, scintillation counting): The quotient of photoelectric emission current from the photocathode by the incident luminous flux under specified conditions of illumination.

NOTES:

1 — : Since cathode luminous sensitivity is not an absolute characteristic but depends on the spectral distribution of the incident flux, the term is commonly used to designate the sensitivity to radiation from a tungsten filament lamp operating at a color temperature of 2854 K.

2 — : Cathode luminous sensitivity is usually measured with a beam at near normal incidence.

sensitivity, cathode radiant (photocathodes, scintillation counting): The quotient of the photoelectric emission current from the photocathode by the incident radiant flux at a given wavelength under specified conditions of irradiation.

NOTE — Cathode radiant sensitivity is usually measured with a beam at near normal incidence.

SEPHR: See **single-electron pulse-height resolution.**

SERT: See **single-electron rise time.**

Copyright © 1972 IEEE All Rights Reserved

Copyright The Institute of Electrical and Electronics Engineers, Inc.
Provided by IHS under license with IEEE
No reproduction or networking permitted without license from IHS Not for Resale

single electron distribution: The pulse-height distribution associated with single electrons originating at the photocathode.

single-electron PHR: The fractional FWHM of the single-electron distribution of a photomultiplier. single-electron rise time. The anode-pulse rise time associated with single electrons originating at the photocathode.

single-electron rise time: The anode-pulse rise time associated with single electrons originating at the photocathode..

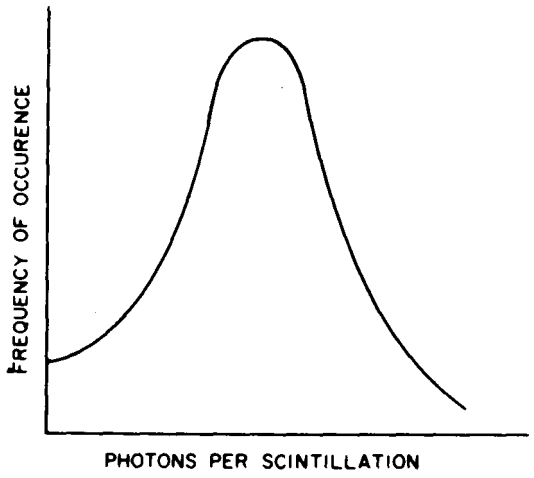

Figure 9—Scintillator Photon Distribution

single-electron time jitter: See **single-electron transit-time spread.**

single-electron time resolution: See **single-electron transit-time spread.**

single-electron transit-time spread: Transit-time spread measured with single-electron events.

spectral quantum yield (photocathode): See **quantum efficiency (photocathode).**

spectral sensitivity characteristic (photocathode): The relation between the radiant sensitivity and the wavelength of the incident radiation under specified conditions of irradiation.

NOTE — Spectral sensitivity characteristic is usually measured with a beam at near normal incidence.

spurious count: A count from a scintillation counter other than (1) one purposely generated, or (2) one due directly to ionizing radiation.

spurious pulse: A pulse in a scintillation counter other than (1) one purposely generated, or (2) one due directly to ionizing radiation.

TAC: See **time-to-amplitude converter.**

time jitter: See **transit-time spread.**

time resolution: See **transit-time spread.**

Copyright © 1972 IEEE All Rights Reserved

Copyright The Institute of Electrical and Electronics Engineers, Inc.
Provided by IHS under license with IEEE
No reproduction or networking permitted without license from IHS Not for Resale

time-to-amplitude converter: An instrument producing an output pulse whose amplitude is proportional to the time difference between start and stop pulses.

transit-time spread: The FWHM of the time distribution of a set of pulses each of which corresponds to the photomultiplier transit time for that individual event.

transmission-mode photocathode: A photocathode in which radiant flux incident on one side produces photoelectric emission from the opposite side.

tube scintillation pulses (photomultipliers): Dark pulses caused by scintillations within the photomultiplier structure.

Example: Cosmic-ray-induced events.

wavelength shifter (scintillator): A photo fluorescent compound used with a scintillator material to absorb photons and emit related photons of a longer wavelength.

7. Common Acronyms

CHANHI	Upper channel corresponding to the half-amplitude point of a distribution
CHANLO	Lower channel corresponding to the half-amplitude point of a distribution
DRT	Device rise time
FWHM	Full width at half maximum
LED	Light-emitting diode
MGD	Mean gain deviation
PEAK	Pulse-height analyzer channel corresponding to the peak of a distribution
PHR	Pulse-height resolution
PMT	Photomultiplier
SEPHR	Single-electron pulse-height resolution
SERT	Single-electron rise time
TAC	Time-to-amplitude converter

Copyright © 1972 IEEE All Rights Reserved

Copyright The Institute of Electrical and Electronics Engineers, Inc.
Provided by IHS under license with IEEE
No reproduction or networking permitted without license from IHS Not for Resale