IEEE Std 317-1983(R2003)
(Revision of IEEE Std 317-1976)

IEEE Standard for Electric Penetration Assemblies in Containment Structures for Nuclear Power Generating Stations

Sponsor
Nuclear Power Engineering Committee
of the
IEEE Power Engineering Society

Approved September 23, 1982
Reaffirmed December 9, 2003
IEEE Standards Board

Approved July 10, 1984
Reaffirmed July 19, 1989
American National Standards Institute

Corrected Edition

© Copyright 1983 by

The Institute of Electrical and Electronics Engineers, Inc

345 East 47th Street, New York, NY 10017

No part of this publication may be reproduced in any form, in an electronic retrieval system or otherwise, without the prior written permission of the publisher.

--`,,`,,-`-`,,`,,`,`,,`---

Copyright The Institute of Electrical and Electronics Engineers, Inc.
Provided by IHS under license with IEEE
No reproduction or networking permitted without license from IHS

Not for Resale

IEEE Standards documents are developed within the Technical Committees of the IEEE Societies and the Standards Coordinating Committees of the IEEE Standards Board. Members of the committees serve voluntarily and without compensation. They are not necessarily members of the Institute. The standards developed within IEEE represent a consensus of the broad expertise on the subject within the Institute as well as those activities outside of IEEE which have expressed an interest in participating in the development of the standard.

Use of an IEEE Standard is wholly voluntary. The existence of an IEEE Standard does not imply that there are no other ways to produce, test, measure, purchase, market, or provide other goods and services related to the scope of the IEEE Standard. Furthermore, the viewpoint expressed at the time a standard is approved and issued is subject to change brought about through developments in the state of the art and comments received from users of the standard. Every IEEE Standard is subjected to review at least once every five years for revision or reaffirmation. When a document is more than five years old, and has not been reaffirmed, it is reasonable to conclude that its contents, although still of some value, do not wholly reflect the present state of the art. Users are cautioned to check to determine that they have the latest edition of any IEEE Standard.

Comments for revision of IEEE Standards are welcome from any interested party, regardless of membership affiliation with IEEE. Suggestions for changes in documents should be in the form of a proposed change of text, together with appropriate supporting comments.

Interpretations: Occasionally questions may arise regarding the meaning of portions of standards as they relate to specific applications. When the need for interpretations is brought to the attention of IEEE, the Institute will initiate action to prepare appropriate responses. Since IEEE Standards represent a consensus of all concerned interests, it is important to ensure that any interpretation has also received the concurrence of a balance of interests. For this reason IEEE and the members of its technical committees are not able to provide an instant response to interpretation requests except in those cases where the matter has previously received formal consideration.

Comments on standards and requests for interpretations should be addressed to:

Secretary, IEEE Standards Board
345 East 47th Street
New York, NY 10017
USA

Copyright The Institute of Electrical and Electronics Engineers, Inc.
Provided by IHS under license with IEEE
No reproduction or networking permitted without license from IHS
Not for Resale

Foreword

(This Foreword is not a part of IEEE Std 317-1983, IEEE Standard for Electric Penetration Assemblies in Containment Structures for Nuclear Power Generating Stations.)

This standard presents criteria to facilitate the determination of the features of design, construction, test, qualification and installation relative to the electric penetration assemblies of primary containments of the nuclear facilities that comply with the United States Nuclear Regulatory Commission's Code of Federal Regulations (10CFR50).

Adherence to these criteria alone may not suffice for ensuring the health and safety of the public because it is the integrated performance of the structures, the fluid systems, the instrumentation, and the electric systems of the stations that establishes the consequences of accidents. Each applicant has the responsibility to assure himseft and others that this integrated performance is adequate.

The IEEE will maintain this standard current with the state of the technology. Comments on this standard and suggestions for the additional material that should be included are invited.

This standard was prepared by a Working Group of Subcommittee 1, General Plant Criteria, of the Nuclear Power Engineering Committee of the IEEE Power Engineering Society. At the time this standard was approved the members of the working group were as follows:

W. S. Rautio, *Chair*
R.F. Karlicek, *Vice Chair*
T. R. Vardaro, *Secretary*

R. G. Brunner	R.B. Jones	D.G. O'Brien
J. M. Buckman	L. Korner	D.K. Sorenson
S. G. Caroll	P. McBride	J.E. Thompson

At the time the IEEE Nuclear Power Engineering Committee approved this standard, it had the following membership:

R. E. Allen, *Chair*
B. M. Rice, *Vice Chair*
J. T. Bauer, *Vice Chair*
C. M. Chiappetta, *Secretary*

J. F. Bates	L. Hanes	C. A. Petrizzo
T. M. Bates, Jr	R. I. Hayford	N. S. Porter
F. D. Baxter	I. M. Jacobs	W. S. Rautio
R. G. Benham	R. F. Karlicek	H. V. Redgate
J. T. Boettger	A. Laird	A. R. Roby
D. F. Brosnan	G. R. Leidich	W. F. Sailer
D. G. Cain	L. C. Madison	A. J. Spurgin
F. W. Chandler	T. J. McGrath	L. Stanley
E. A. Corte	S. H. Moss	H. K. Stolt
R. P. Daigle	W. E. O'Neal	D. F. Sullivan
E. F. Dowling	R. W. Pack	P. Szabados
J. J. Ferencsik	M. Pai	L. D. Test
E. P. Fogarty	E. S. Patterson	J. E. Thomas
J. M. Gallagher	J. R. Penland	T. R. Vardaro
J. B. Gardner		F. J. Volpe

Copyright The Institute of Electrical and Electronics Engineers, Inc.
Provided by IHS under license with IEEE
No reproduction or networking permitted without license from IHS
Not for Resale

When the IEEE Standards Board approved this standard on September 23, 1982, it had the following membership:

Irvin N. Howell, Jr, *Chair*
Edward Chelotti, *Vice Chair*
Sava I. Sherr, *Secretary*

G. Y. R. Allen	Donald C. Fleckenstein	A. R. Parsons
J. J. Archambault	Jay Forster	J. P. Riganati
James H. Beall	Kurt Greene	Frank L. Rose
John T. Boettger	Joseph L. Koepfinger	Robert W. Seelbach
J. V. Bonucchi	Irving Kolodny	Jay A. Stewart
Edward J. Cohen	John E. May	Clifford O. Swanson
Len S. Corey	Donald T. Michael*	Robert E. Weiler

*Member emeritus

--`,,`,,`-`-`,,`,,`,`,,`---

Copyright The Institute of Electrical and Electronics Engineers, Inc.
Provided by IHS under license with IEEE
No reproduction or networking permitted without license from IHS
Not for Resale

CLAUSE PAGE

1. Scope 1

2. Definitions 1

3. References 2

4. Service Classification and Ratings 3

4.1 Service Classification 3
4.2 Ratings 4
4.3 Rated Capabilities During the Most Severe DBE Environmental Conditions 6

5. Design Requirements 7

5.1 Mechanical-Design Requirements 7
5.2 Electrical-Design Requirements 8
5.3 Fire Resistance Requirements 9
5.4 Qualified Life 9

6. Qualification 9

6.1 General 9
6.2 Design Tests 10
6.3 Qualified-Life Tests 13

7. Production Tests 16

7.1 Gas-Leak Rate Test 16
7.2 Pneumatic Pressure Test 16
7.3 Dielectric-Strength Test 17
7.4 Insulation-Resistance Test 17
7.5 Conductor Continuity and Identification Tests 17
7.6 Partial Discharge (Corona) Test 17

8. Installation and Field Testing as Part of Installation 17

8.1 Installation and Testing Standard 17
8.2 Installation Procedures 17
8.3 Leak-Rate Test 18
8.4 Electrical Tests 18

9. Quality Control and Quality Assurance Requirements 18

9.1 Materials, Processes, and Personnel 18
9.2 Records 18
9.3 Documentation of Design Qualification 18
9.4 Assembly Nameplate 19
9.5 Data and Ratings 19

--`,,`-`-`,,`,,`,`,,`---

Copyright The Institute of Electrical and Electronics Engineers, Inc.
Provided by IHS under license with IEEE
No reproduction or networking permitted without license from IHS Not for Resale

CLAUSE PAGE

10. Requirements for Purchaser's Specification 20

10.1 General 20
10.2 Recommended Outline for Purchaser's Specification 20
10.3 Guide to Design Specification Data Requirements and Contents 20

Annex A Preferred Values (Informative) 23

Annex B Electric Penetration Interfaces (Informative) 29

Annex C Penetration Assembly Configuration (Informative) 31

Annex D Thermal-Life Test Procedures (Informative) 33

--`,,`-`-`,,`,,`,`,,`---

Copyright The Institute of Electrical and Electronics Engineers, Inc.
Provided by IHS under license with IEEE
No reproduction or networking permitted without license from IHS Not for Resale

IEEE Standard for Electric Penetration Assemblies in Containment Structures for Nuclear Power Generating Stations

1. Scope

This standard prescribes the requirements for the design, construction, qualification, test, and installation of electric penetration assemblies in nuclear containment structures for stationary nuclear power generating stations. The requirements for external circuits which connect to penetration assemblies are beyond the scope of this standard. This standard does not include requirements for operation, maintenance, or periodic testing after installation.

2. Definitions

analysis: A process of mathematical or other logical reasoning that leads from stated premises to the conclusion concerning the qualification of an assembly or components.

design basis events (DBE): Postulated events used in the design to establish the acceptable performance requirements of the structures, systems, and components.

design service conditions: The service conditions used as the basis for ratings and for the design qualification of electric penetration assemblies.

design tests: Tests performed to verify that an electric penetration assembly meets design requirements.

double aperture seal: Two single aperture seals in series.

double electric conductor seal: Two single electric conductor seals in series.

electric penetration assembly: An assembly of insulated electric conductors, conductor seals, module seals (if any), and aperture seals that provides the passage of the electric conductors through a single aperture in the nuclear containment structure, while providing a pressure barrier between the inside and the outside of the containment structure. The electric penetration assembly includes terminal (junction) boxes, terminal blocks, connectors and cable supports, and splices which are designed and furnished as an integral part of the assembly.

environmental conditions: Physical service conditions external to the electric penetration assembly such as ambient temperature, pressure, radiation, humidity, vibration, chemical or demineralized water spray and submergence expected as a result of normal operating requirements, and postulated conditions appropriate for the design basis events applicable to the electric penetration assembly.

Copyright © 1983 IEEE All Rights Reserved

Copyright The Institute of Electrical and Electronics Engineers, Inc.
Provided by IHS under license with IEEE
No reproduction or networking permitted without license from IHS
Not for Resale

generic design: A family of equipment units having similar materials, manufacturing processes, limiting stresses, design, and operating principles, that can be represented for qualification purposes by a representative unit(s).

installed life: The interval of time from installation to permanent removal from service, during which the electric penetration assembly is expected to perform its required function(s).

NOTE — Components of the assembly may require periodic replacement; thus, the installed life of such components is less than the installed life of the assembly.

margin: The difference between the most severe design service conditions and the conditions used in the design qualification to account for normal variations in commerical production of equipment and reasonable errors in defining satisfactory performance.

qualified life: The period of time, prior to the start of a design basis event, for which the equipment was demonstrated to meet the design requirements for the specified service conditions.

NOTE — At the end of the qualified life, the equipment shall be capable of performing the safety function(s) required for the postulated design basis and post design basis events.

qualified life test: Tests performed on preconditioned test specimens to verify that an electric penetration assembly will meet design requirements at the end of its qualified life.

service conditions: Environmental, power, and signal conditions expected as a result of normal operating requirements, expected extremes in operating requirements, and postulated conditions appropriate for the design basis events applicable to the electric penetration assembly.

single aperture seal: A single seal between the containment aperture and the electric penetration assembly.

single electric conductor seal: A mechanical assembly arranged in such a way that there is a single pressure barrier seal between the inside and the outside of the containment structure along the axis of the electric conductor.

3. References

Specific sections and requirements of the codes, standards, and guides listed below are referenced in this standard. No other requirements of the referenced documents are invoked or implied. In case of conflicts between this standard and the referenced standards and guides, this standard shall take precedence over the referenced documents.

[1] ANSI/IEEE C37.09-1979, American National Standard Test Procedure for AC High-Voltage Circuit Breakers Rated on a Symmetrical Basis.[1]

[2] ANSI MC 96.1-1982, Tables for Thermocouples Temperatures-Electromotive Force (EMF).

[3] ANSI N45.2-1977, Requirements for Nuclear Facilities, Quality Assurance Program.

[4] ANSI N45.2.2-1978, Packaging, Shipping, Receiving, Storage, and Handling of Items for Nuclear Power Plants (during the Construction Phase).

[5] ANSI/ASTM D 568-77, Standard Test Methods for Rate of Burning and/or Extent and Time of Burning of Flexible Plastics in a Vertical Position.

[6] ANSI/ASTM D 2863-77, Standard Method for Measuring the Minimum Oxygen Concentration to Support Candle-Like Combustion of Plastics (Oxygen Index).

[7] ANSI/IEEE C37.20-1969, (Consolidated Edition 1974) (R 1981). IEEE Standard for Switchgear Assemblies Including Metal-Enclosed Bus.

[1]ANSI publications are available from the Sales Department, American National Standards Institute, 1430 Broadway, New York, NY 10018.

Copyright © 1983 IEEE All Rights Reserved

Copyright The Institute of Electrical and Electronics Engineers, Inc.
Provided by IHS under license with IEEE
No reproduction or networking permitted without license from IHS Not for Resale

[8] ANSI/IEEE Std 336-1980, IEEE Standard Installation, Inspection, and Testing Requirements for Class lE Instrumentation and Electric Equipment at Nuclear Power Generating Stations.

[9] ANSI/IEEE Std 344-1975 (R 1980), IEEE Recommended Practice for Seismic Qualification of Class lE Equipment for Nuclear Power Generating Stations.

[10] ANSI/IEEE Std 383-1974 (R 1980), IEEE Standard for Type Test of Class lE Electric Cables, Field Splices, and Connections for Nuclear Power Generating Stations.

[11] ANSI/NFPA-70-1981, National Electrical Code.[2]

[12] ASME Boiler and Pressure Vessel Code.[3]

[13] ASTM D635-81, Standard Test Method for Rate of Burning and/or Extent and Time of Burning of Self-Supporting Plastics in a Horizontal Position.[4]

[14] ICEA P-32-382-1969, Short-Circuit Characteristics of Insulated Cable.[5]

[15] IEEE Std 98-1983, IEEE Standard for the Preparation of Test Procedures for the Thermal Evaluation of Solid Electrical Insulating Materials.

[16] IEEE Std 101-1972 (R 1980), IEEE Guide for the Statistical Analysis of Thermal Life Test Data.

[17] IEEE Std 323-1983, IEEE Standard for Qualifying Class lE Equipment for Nuclear Power Generating Stations.

[18] IEEE Std 627-1980, IEEE Standard for Design Qualifications of Safety Systems Equipment Used in Nuclear Power Generating Stations.

[19] NEMA WC 3-1980, Rubber-Insulated Wire and Cable for the Transmission and Distribution of Electrical Energy (ICEA S-1981 Sixth Edition).[6]

4. Service Classification and Ratings

4.1 Service Classification

The conductors of each circuit of an electric penetration assembly shall be assigned one of the following service classifications based on its use.

[2]The National Electrical Code is published by the National Fire Protection Association, Batterymarch Park, Quincy, MA 02269. Copies are also available from the Sales Department of American National Standards Institute, 1430 Broadway, New York, NY 10018.
[3]ASME publications are available from the American Society of Mechanical Engineers, 345 East 47th Street, New York, NY 10017.
[4]ASTM publications are available in the US from American Society for Testing and Materials, 1916 Race Street, Philadelphia, PA 10103.
[5]ICEA publications are avaialable in the US from Insulated Cable Engineers Association, Inc, PO Box P, South Yarmouth, MA 02664.
[6]NEMA publications are available from the National Electrical Manufacturers Association (NEMA), 2101 L. Street, NW, Washington, DC 20037.

Copyright © 1983 IEEE All Rights Reserved

Copyright The Institute of Electrical and Electronics Engineers, Inc.
Provided by IHS under license with IEEE
No reproduction or networking permitted without license from IHS
Not for Resale

4.1.1 Medium-Voltage Power

Conductors of power circuits having rated values above 1000 V shall be classified as medium-voltage power and shall have the following ratings (see 4.2 and 4.3):

1) Rated voltage
2) Rated continuous current
3) Rated short-time overload current and duration
4) Rated short-circuit current
5) Rated short-circuit thermal capacity
6) Rated capabilities during the most severe DBE environmental conditions

4.1.2 Low-Voltage Power

Conductors of power circuits rated 1000 V and below shall be classified as low-voltage power and shall have the following ratings (see 4.2 and 4.3):

1) Rated voltage
2) Rated continuous current
3) Rated short-time overload current and duration
4) Rated short-circuit current
5) Rated short-circuit thermal capacity
6) Rated capabilities during the most severe DBE environmental conditions.

4.1.3 Low-Voltage Control

Conductors of control circuits rated 1000 V and below shall be classified as control and shall have the following ratings (see 4.2 and 4.3):

1) Rated voltage
2) Rated continuous current
3) Rated short-time overload current and duration
4) Rated short-circuit current
5) Rated short-circuit thermal capacity
6) Rated capabilities during the most severe DBE environmental conditions

4.1.4 Instrumentation

Conductors of instrumentation circuits shall have a voltage rating defined by the design service conditions.

NOTE — Instrumentation conductors include, for example, coaxial, triaxial, thermocouple, and twisted pair circuits.

4.2 Ratings

4.2.1 Rated Voltage

The rated voltage of power and control conductor(s) of a circuit shall be as follows:

Nominal System Voltage (V)	Rated Voltage (V)
0-300	300
301-600	600
601-1000	1000
1001-5000	5000
5001-8000	8000
8001-15 000	15 000

Copyright © 1983 IEEE All Rights Reserved

Copyright The Institute of Electrical and Electronics Engineers, Inc.
Provided by IHS under license with IEEE
No reproduction or networking permitted without license from IHS Not for Resale

4.2.2 Rated Continuous Current

The rated continuous current shall be the current in amperes that a conductor can carry continuously without the stabilized temperatures of the conductor and the penetration nozzle-concrete interface (if applicable) exceeding their design limits, with all other conductors in the assembly carrying their rated continuous current under the maximum normal environment temperature of the design service conditions.

See Appendix A2, Rated Continuous Current, for preferred values.

4.2.3 Rated Short-Time Overload Current and Duration

The rated short-time overload current and duration shall be the overload current in amperes that each conductor of a circuit can carry for a specified duration, following continuous operation at rated continuous current, without the temperature of the conductors exceeding their short-time overload design temperature limit with all other conductors in the assembly carrying their rated continuous current under the maximum normal environment temperature of the design service conditions. The rated short-time overload current shall not be less than seven times the rated continuous current of the conductor, and the duration shall be not less than 10 s.

4.2.4 Rated Short-Circuit Current

The rated short-circuit current shall be the current in amperes that each conductor of a circuit can carry while maintaining electrical integrity (see 5.2.2) and mechanical integrity (see 5.1.6) with all other conductors in the assembly carrying their rated continuous current under the maximum normal environment temperature of the design service conditions.

The rated short-circuit current for alternating-current circuits shall be expressed in rms symmetrical amperes and shall be based on the test procedure in 6.2.8.

See Appendix A3 for preferred values of rated short-circuit current.

The rated short-circuit current for direct-current circuits shall be based on its having a constant dc value unless otherwise specified.

4.2.5 Rated Short-Circuit Thermal Capacity (I^2t)

The rated short-circuit thermal capacity shall be the product of short-circuit current in amperes squared and its duration in seconds that each conductor of a circuit can carry following continuous operation at rated continuous current while maintaining electrical integrity (see 5.2.2) and mechanical integrity (see 5.1.6) with all other conductors in the assembly carrying their rated continuous current under the maximum normal environment temperature of the design service conditions.

The rated short-circuit thermal capacity shall be expressed in amperes squared-seconds (I^2t) subject to the following limits:

1) The short-circuit current shall not exceed the rated short-circuit current and shall be expressed in rms symmetrical amperes for ac circuits and dc amperes for dc circuits.
2) The duration shall not exceed 2 s.

See Appendix A4 for preferred values of rated short-circuit thermal capacity (I^2t).

Copyright © 1983 IEEE All Rights Reserved

Copyright The Institute of Electrical and Electronics Engineers, Inc.
Provided by IHS under license with IEEE
No reproduction or networking permitted without license from IHS Not for Resale

4.3 Rated Capabilities During the Most Severe DBE Environmental Conditions

4.3.1 Rated Continuous Current During the Most Severe DBE Environmental Conditions

The conductors in the electric penetration assembly shall have a rated continuous current during the most severe DBE environmental conditions not less than the rated continuous current in 4.2.2 for which the conductors shall maintain electrical integrity (see 5.2.2) and containment integrity (see 5.1.7).

4.3.2 Rated Short-Time Overload Current and Duration During the Most Severe DBE Environmental Conditions

The conductors in the electric penetration assembly shall have a rated short-time overload current and duration during the most severe DBE environmental conditions not less than the rated short-time overload current and duration in 4.2.3 for which the conductors shall maintain electrical integrity (see 5.2.2) and containment integrity (see 5.1.7), with the remaining conductors in the assembly carrying rated continuous current. The conductors shall be capable of meeting the above requirements at the maximum conductor temperature attained during the most severe DBE environmental conditions.

4.3.3 Rated Short-Circuit Current During the Most Severe DBE Environmental Conditions

The conductors in the electric penetration assembly shall have a rated short-circuit current during the most severe DBE environmental conditions not less than the rated short-circuit current in for which the conductors shall maintain containment integrity (see 5.1.7) with the remaining conductors in the assembly carrying rated continuous current and without affecting the mechanical and electrical integrity of the remaining conductors. The conductors shall be capable of meeting the above requirements at the maximum conductor temperature attained during the most severe DBE service conditions.

See Appendix A3 for preferred values of rated short-circuit current during the most severe DBE environmental conditions.

4.3.4 Rated Short-Circuit Thermal Capacity (I^2t) During the Most Severe DBE Environmental Conditions

The conductors in the electric penetration assembly shall have a rated short-circuit thermal capacity (I^2t)during the most severe DBE environmental conditions not less than the rated short-circuit thermal capacity (I^2t) of 4.2.5, following continuous operation at rated continuous current while maintaining containment integrity of the assembly (see 5.1.7) and without affecting the electrical integrity (see 5.2.2) and the mechanical integrity (see 5.1.6) of the conductors not subjected to the short-circuit current. The conductors shall be capable of meeting the above requirements at the maximum conductor temperature attained during the most severe DBE environmental conditions. The short-circuit thermal capacity (I^2t) shall be expressed in ampere squared-seconds subject to the following limits:

1) The short-circuit current shall not exceed its rated value.
2) The duration shall not exceed 2 s.

See Appendix A4 for preferred values of rated short-circuit thermal capacity (I^2t) during the most severe DBE environmental conditions.

Copyright © 1983 IEEE All Rights Reserved

-`-`-`,,`-`-`,,`,,`,`,,`---

Copyright The Institute of Electrical and Electronics Engineers, Inc.
Provided by IHS under license with IEEE
No reproduction or networking permitted without license from IHS Not for Resale

5. Design Requirements

5.1 Mechanical-Design Requirements

5.1.1 Pressure Boundary

The mechanical design, materials, fabrication, examinations, and testing of the pressure boundary of the electric penetration assembly shall be in accordance with the requirements of the ASME Boiler and Pressure Vessel Code [12],[7] Division 1, Section III, Subsection NE for Class MC Components. See Appendix C for ASME pressure boundary of typical installed electric penetration assemblies.

Stress calculations shall include stresses from all applied loads including electromagnetic forces produced by rated short-circuit currents.

5.1.2 Design Pressure and Temperature

The design pressure and temperature shall be determined and specified in accordance with the rules of the ASME Boiler and Pressure Vessel Code [12], Division 1, Section III, Subsection NE for MC containment vessels.

5.1.3 Minimum Design Temperature

The minimum design temperature of the electric penetration assembly shall be – 28 °C (– 20 °F).

5.1.4 Design Gas-Leak Rate

1) The electric penetration assembly, exclusive of the aperture seal(s), shall be designed to have a total gas-leak rate not greater than $1 \cdot 10^{-3}$ std cm^3/s† of dry nitrogen at 20 °C ± 15 °C (68 °F ± 27 °F) at the design pressure.
2) The aperture seal(s) of the electric penetration assembly shall be designed to have a total gas-leak rate not greater than $1 \cdot 10^{-3}$ std cm^3/s of dry nitrogen at 20 °C ± 15 °C (68 °F ± 27 °F) at design pressure.
3) The electric penetration assembly, including the aperture seal(s), shall be designed to have a total gas-leak rate not greater than $1 \cdot 10^{-2}$ std cm^3/s of dry nitrogen at the design pressure and temperature.

5.1.5 Gas-Leak Rate Testing and Monitoring Provisions

Electric penetration assemblies having double electric conductor seals or double aperture seals, or both, shall be designed for and shall include provisions for gas-leak rate testing and monitoring of the double seals after installation.

Valves, fittings, and pressure piping and gauge(s) provided for this purpose shall have a pressure rating not less than 110% design pressure.

Electric penetration assemblies having double electric conductor seals shall include provisions for gas-leak rate monitoring during storage.

[7]Numbers in brackets correspond to those of the references listed in Section 3.

Copyright © 1983 IEEE All Rights Reserved

Copyright The Institute of Electrical and Electronics Engineers, Inc.
Provided by IHS under license with IEEE
No reproduction or networking permitted without license from IHS Not for Resale

5.1.6 Mechanical Integrity

The mechanical support systems, conductors, terminations and conductor support systems, pressure barrier(s), and conductor and aperture seals shall be designed to withstand without failure or loss of function the following design service conditions:

1) Rated continuous current
2) Thermal cycling due to normal operation
3) Rated short-time overload current and duration
4) Rated short-circuit current
5) Rated short-circuit thermal capacity (I^2t)
6) Design basis events including LOCA, high energy line break (excluding direct steam jet impingement), seismic events, and other designated events.

5.1.7 Containment Integrity

The electric penetration assembly including aperture seal(s) shall be designed to have a total gas-leak rate not greater than $1 \cdot 10^{-2}$ std cm^3/s using dry nitrogen at design pressure and ambient temperature after installation and after any design basis events (excluding direct steam jet impingement).

5.1.8 Packaging, Shipping, Receiving, Storage, and Handling

The electric penetration assembly shall be designed to meet the following requirements:

1) ANSI N45.2.2-1978 [4]. Storage shall be in accordance with level B. Packaging shall be in accordance with level C or better.
2) Withstand, without damage, exposure during shipping to temperatures not less than the minimum design temperature of 5.1.3 nor more than 65.5 °C (150 °F).
3) Electric penetration assemblies having double electrical conductor seals or double aperture seals, or both, which are completely assembled and which require protection from exposure to the atmosphere, shall have the internal parts of the sealed system maintained at a positive pressure and shall include the monitoring provisions in 5.1.5.

5.1.9 Installation by Welding

Where the method of attachment to the containment vessel is by welding, the assembly shall be designed for such method of attachment and procedures established so that the welding will not damage the assembly.

5.2 Electrical-Design Requirements

5.2.1 General

The electric penetration assembly shall be designed to meet the following requirements:

1) Medium-voltage power conductors shall be free of partial discharge (corona) when energized at rated voltage.
2) Instrumentation circuits shall be designed to meet the requirements defined by the design service conditions.
3) The insulation system of each conductor shall be capable of withstanding the dielectric tests specified in Section 6.
4) Thermocouple conductors and connections shall be designed within the error limits for thermocouple circuits in accordance with ANSI MC 96.1-1982 [2].

Copyright © 1983 IEEE All Rights Reserved

Copyright The Institute of Electrical and Electronics Engineers, Inc.
Provided by IHS under license with IEEE
No reproduction or networking permitted without license from IHS Not for Resale

5) Connections and splices of medium- and low-voltage power and control conductors shall be capable of carrying rated continuous current prior to and following rated short-circuit current without the temperature of the connections or splices exceeding the temperature of the conductor, or the connection failing.
6) Electric penetration assemblies having conductors of more than one voltage rating in the assembly shall be designed with a ground barrier separating the conductors of each voltage rating.
7) The heat generated by hysteresis and eddy current losses shall be included in the design requirements for power and control conductors.

5.2.2 Electrical Integrity

The conductors, connections, and electrical insulation systems shall be designed to withstand without failure or loss of function the following design service conditions:

1) Rated continuous current and rated voltage
2) Thermal cycling due to normal operation
3) Rated short-time overload current and duration
4) Rated short-circuit current
5) Rated short-circuit thermal capacity
6) Design basis events including LOCA, high energy line break (excluding direct steam jet impingement), seismic events, and other designated events.

5.3 Fire Resistance Requirements

1) Insulated cables and splices shall be qualified in accordance with ANSI/IEEE Std 383-1974 (R 1980) [10], 2.5.
2) All other organic, nonmetallic material, except those materials which by their physical configuration will not contribute to fire, shall meet at least one of the following requirements as applicable:
   a) Classified as *non-burning* or *self-extinguishing* in accordance with ASTM D 635-81 [13], or ANSI/ASTM D 568-77 [5].
   b) Classified as having an *Oxygen Index* not less than 26 in accordance with ANSI/ASTM D 2863-77 [6].

5.4 Qualified Life

The electric penetration assembly shall be designed to have a qualified life not less than the installed life. If the qualified life of a component(s) is less than the installed life, as determined by the qualification in Section 6., replacement of the component(s) shall be required, prior to the end of its qualified life, or the qualified life extended in accordance with IEEE 323-1983 [17].

6. Qualification

6.1 General

6.1.1 Tests

Qualification shall be established by tests which demonstrate that the electric penetration assembly will perform its intended function when subjected to conditions that simulate installed life under the design service conditions.

Qualification shall include design tests which demonstrate the adequacy of the design to meet requirements that are unrelated to aging and shall include qualified-life tests which address aging and establish the qualified life of the assembly.

Copyright © 1983 IEEE All Rights Reserved

Copyright The Institute of Electrical and Electronics Engineers, Inc.
Provided by IHS under license with IEEE
No reproduction or networking permitted without license from IHS Not for Resale

Design tests may be performed in any sequence on different test specimens. Qualified life tests shall be performed on preconditioned test specimens in the sequence given in 6.3 and may be performed on test specimens that have not been subjected to design tests.

Documented analyses, with justification of methods, theories, and assumptions or additional testing of components or assemblies, or both, may be used with existing qualification tests to qualify the design to service conditions which differ from the design service conditions under which qualification was demonstrated.

Each conductor size, rating, and configuration need not be subjected to qualification tests; instead, representative test specimens may be used provided they meet the requirements in 6.1.3.

6.1.2 Margin

The following minimum margins shall be applied only to the service conditions listed below and only where specifically required in the following sections pertaining to qualification:

1) Currents: +5% of value
2) Voltage: +10% of value
3) Temperature: +8 °C (+15 °F). When qualification testing is conducted under saturated steam conditions, the temperature margin shall be such that test pressure will not exceed saturated steam pressure corresponding to peak service temperature by more than $7 \cdot 10^4$ Pa (10 lbf/in^2)
4) Pressure: +10% of gage, but not more than $7 \cdot 10^4$ Pa (10 lbf/in^2)
5) Vibration: +10% added to the acceleration of the input motion spectra of the equipment
6) Radiation: +10% (on accident dose)

6.1.3 Test Specimen Requirements

Test specimens used in qualification tests shall meet the following requirements:

1) Be of the same generic design as the production units
2) Be manufactured using production facilities and processes which are representative of those used for the production units
3) Be of such configuration as to produce thermal, electrical, and mechanical stresses representative of the design being qualified

Tests on components or partially assembled electric penetration assemblies are acceptable where the stresses and functional requirements are equivalent to those in the fully-assembled state.

Tests on conductors shall include terminations when they are an integral part of the electric penetration assembly.

6.2 Design Tests

The following design tests shall be performed for each generic design. The tests may be performed in any sequence on different test specimens.

6.2.1 Gas-Leak Rate Test

1) The gas-leak rate of the test specimen, exclusive of aperture seals, shall not exceed a total leak-rate equivalent to $1 \cdot 10^{-3}$ std cm^3/s of city nitrogen when tested at not less than design pressure and at a temperature of 20 °C ± 15 °C (68 °F ± 27 °F).
2) The gas-leak rate of the test specimen, including nonwelded aperture seals, shall not exceed a total leak-rate equivalent to $1 \cdot 10^{-2}$ std cm^3/s of dry nitrogen when tested at design pressure and temperature.

Copyright © 1983 IEEE All Rights Reserved

Copyright The Institute of Electrical and Electronics Engineers, Inc.
Provided by IHS under license with IEEE
No reproduction or networking permitted without license from IHS Not for Resale

NOTE — An acceptable means of conducting this test is to adjust the pressure upward to compensate for the difference between the room ambient temperature and the design temperature by use of the pure gas laws.

6.2.2 Pneumatic Pressure Test

Where the electric penetration assembly is designed as a pressure vessel in accordance with the ASME Boiler and Pressure Vessel Code [12], it shall be pneumatically pressure tested in accordance with Division 1, Section III, Subsection NE, Article NE-6000 of the code.

6.2.3 Dielectric-Strength Tests

The following dielectric strength tests shall be conducted at test facility room ambient conditions of temperature, pressure, and relative humidity:

1) *Power Frequency Voltage Test*. Each medium-voltage power, low-voltage power, and control conductor shall be given a 60 Hz sinusoidal voltage test for not less than I min applied between each conductor and ground and between each conductor and adjacent conductors not separated by a ground barrier. The test voltage shall be based on the voltage rating of the conductor in accordance with the following table:

Conductor Rated Voltage (V)	rms Test Voltage (V)
300	1600
600	2200
1000	3000
5000	19 000
8000	36 000
15 000	36 000

2) *Impulse Voltage Tests*. Each medium voltage power conductor shall be given a full-wave 1.2 X 50 μs impulse voltage test series, with a crest voltage not less than the following:

Conductor Rated Voltage (V)	Impulse Crest Voltage (kV)
5000	60
8000	95
15 000	95

The impulse tests and acceptance criteria shall be in accordance with ANSI/C37.20-1969 (R 1981) [7], 5.2.1.2.

3) Instrumentation conductors shall be tested to demonstrate that they meet the requirements of the design service conditions.

Copyright © 1983 IEEE All Rights Reserved

Copyright The Institute of Electrical and Electronics Engineers, Inc.
Provided by IHS under license with IEEE
No reproduction or networking permitted without license from IHS Not for Resale

6.2.4 Insulation Resistance Test

An insulation resistance test shall be performed at test facility room ambient conditions of temperature, pressure, and relative humidity in accordance with the following:

1) Medium-voltage power conductors shall be tested at 500 V dc (minimum) and shall have a minimum resistance of 1000 MΩ between the conductor and ground and between the conductor and adjacent conductors not separated by a ground barrier.
2) Low-voltage power and control conductors shall be tested in accordance with 6.2.4(1) of this standard and shall have a minimum resistance of 100 MΩ.
3) Instrumentation conductors shall be tested to demonstrate that they meet the requirements of the design service conditions.

6.2.5 Partial-Discharge (Corona) Test

Medium-voltage power conductors shall be tested for partial discharge (corona) between phase conductors and shall have a partial-discharge extinction voltage not less than rated voltage. The test apparatus, calibration, and test procedure shall be in accordance with NEMA WC3-1980 [19], Part 6. The test shall be performed at room ambient conditions of pressure, temperature, and humidity.

6.2.6 Rated Continuous Current Test

A test shall be performed with each conductor and its termination of the test specimen carrying its rated continuous current under the maximum normal environment temperature of the design service conditions.

The maximum stabilized temperatures shall be recorded and shall not exceed the design limits.

6.2.7 Rated Short-Time Overload Current Test

The short-time overload current rating of each size conductor of the test specimen shall be verified by testing under the maximum normal environment temperature of the design service conditions. The test currents and duration shall be in accordance with 4.2.3. The maximum temperatures of the overloaded conductors attained during the test shall be recorded and shall not exceed the design limits.

6.2.8 Rated Short-Circuit Current Test

The short-circuit current rating of each size conductor of the test specimen shall be verified by testing in accordance with the following procedures:

1) The test specimen shall simulate the electric penetration assembly installed condition and include all components which are stressed during short-circuit conditions.
2) The test may be conducted at test facility room ambient temperatures; however, the conductor temperatures at the start of the test shall not be less than the maximum stabilized temperature attained during the rated continuous current test in 6.2.6.
3)
   a) Set up the test circuit with a bolted fault connection in place of the penetration. The test circuit parameters should be set up for an X/R ratio of 8 or more for low-voltage power and control service and an X/R ratio of 16 or more for medium-voltage service. ANSI C37.09-1979 [1] may be used for interpretation of the test data.
   b) The test circuit shall produce a short-circuit current not less than rated short-circuit current plus 5% margin. Where the short-circuit current for ac circuits does not have a constant symmetrical value, the rms value of the symmetrical current at the end of the test period shall not be less than the rated short-circuit current plus 5% margin.

Copyright © 1983 IEEE All Rights Reserved

--`,,`-`-`,,`,,`,`,,`---

Copyright The Institute of Electrical and Electronics Engineers, Inc.
Provided by IHS under license with IEEE
No reproduction or networking permitted without license from IHS Not for Resale

4) Remove the bolted fault and insert the penetration into the test circuit. Apply the short-circuit current. The length of the penetration, including pigtails for accomplishing the fault and the connection to the test circuit should not exceed 20 ft. The short-circuit current with the electric penetration assembly in the test circuit shall not be less than the rated short-circuit current.
5) The duration of short-circuit current flow in the test specimen shall not be less than 0.033 s.
6) After the short-circuit test, the test specimen shall pass the leak-rate test in 7.1 and the electrical tests in 7.5 (continuity verification only) and 7.3.

6.2.9 Rated Short-Circuit Thermal Capacity (I^2t) Test

The short-circuit thermal capacity (I^2t) of each size conductor of the test specimen shall be verified by testing in accordance with the following procedure:

1) The test specimen shall simulate the electric penetration assembly installed condition and include all components which are stressed during short-circuit conditions.
2) The test may be conducted at test facility room ambient temperatures; however, the conductor temperatures at the start of the test shall not be less than the maximum stabilized temperature attained during the rated continuous current test in 6.2.6.
3) The current in the conductor and its duration shall produce an integrated current squared-seconds not less than the rated short-circuit thermal capacity.
4) The maximum temperature attained during the test shall be recorded and not exceed the short-circuit design limits and shall be based on all heat produced by the short-circuit current being stored in the conductors.
5) After the short-circuit thermal capacity (I^2t) test, the test specimen shall pass the leak-rate test as specified in 7.1 and the electrical tests in 7.5 (continuity verification only) and 7.3.
   Where the test specimen includes the aperture seal, the test specimen shall pass the leak-rate test as specified in 8.3.
   NOTE — This test may be combined with the rated short-circuit current test as specified in 6.2.8. The tests of 6.2.8 and 6.2.9 may be omitted as design tests if performed as part of the qualified-life tests.

6.2.10 Seismic Test

The test specimen shall be seismically qualified in accordance with ANSI/IEEE Std 344-1975 (R 1980) [9] for the input motion spectra in the design service conditions plus margin. Testing shall be performed under conditions which simulate the installed assembly including consideration of terminal boxes, external cables, and raceways. During the test, all conductors in the test specimen shall maintain uninterrupted continuity and shall withstand rated voltage plus margin.

After the test, the test specimen shall pass the leak-rate test as specified in 7.1 and the dielectric test as specified in 7.3.

Where the test specimen includes the aperture seal, the test specimen shall pass the leak-rate test as specified in 8.3.

NOTE — The seismic test may be omitted as a design test if performed as part of the qualified-life tests.

6.2.11 Installation Welding Test

Where the method of penetration attachment is by welding, a test shall be conducted to demonstrate that a representative electric penetration assembly can be welded into the containment vessel without damage by following the manufacturer's recommended procedures.

6.3 Qualified-Life Tests

Qualified-life tests shall be performed for each generic design in accordance with the following tests:

Copyright © 1983 IEEE All Rights Reserved

Copyright The Institute of Electrical and Electronics Engineers, Inc.
Provided by IHS under license with IEEE
No reproduction or networking permitted without license from IHS Not for Resale

6.3.1 Initial Tests

Prior to preconditioning, each test specimen shall pass the production tests of Section 7.

6.3.2 Preconditioning

Each test specimen shall be subjected to preconditioning prior to performing the tests in 6.3.3. The preconditioning shall be performed in accordance with the following paragraphs in the order listed:

1) *Shipping and Storage Simulation*. The test specimen shall be exposed to not less than 5 cycles of ambient temperature changes where each cycle varies from −28 °C (−20 °F) to 65.5 °C (150 °F) and the duration of each temperature extreme is not less than 2 h.
2) *Thermal Operating Cycle Simulation*. The test specimen shall be subjected to not less than 120 cycles of temperature changes in the specimen of not less than 55 °C (100 °F) for each cycle. One cycle equates to a temperature change of 100 °, that is, a temperature increase of 100 °F and a decrease of 100 °F.
3) *Thermal Age Conditioning*. The test specimen shall be thermally age conditioned to simulate operation at design normal service temperature for the installed life. Accelerated thermal aging time and temperature derived from Arrhenius data (using procedures in accordance with IEEE Std 98-1983 [15] and IEEE Std 101-1972 (R 1980) [16]) or other methods that can be justified may be employed. See Appendix D.
   Thermal aging is not required if it can be demonstrated that the materials in the test specimen are not subject to significant aging mechanisms as defined in IEEE Std 627-1980 [18], 4.4.1.
4) *Radiation Exposure Simulation*. The test specimen shall be exposed to radiation simulating the design normal service environment radiation for the installed life unless it can be demonstrated that radiation does not degrade the test specimen. See IEEE Std 323-1983 [17], 6.3.4.

NOTE — The maximum integrated radiation dose plus margin due to design basis events may be included at this time instead of later as described in 6.3.3(3).

After preconditioning, the test specimen shall pass the leak-rate test as specified in 8.3 and the electrical tests as specified in 8.4.

Where the test specimen does not include the aperture seal, the test specimen shall pass the leak-rate test as specified in 8.3 except that the leak-rate shall not exceed 10^{-3} std cm^3/s.

6.3.3 Test Requirements

After preconditioning the following tests shall be performed in the sequence given with the test set-up simulating the actual installed condition.

1) *Short-Circuit Current and Short-Circuit Thermal Capacity Tests*. The short-circuit current and the short-circuit thermal capacity of each size conductor shall be verified by testing in accordance with the procedures in 6.2.8 and 6.2.9 except the test specimen shall pass the leak-rate test in 8.3 and the electrical tests in 8.4(1) and (3).
2) *Seismic Test*. The test specimen shall be seismically qualified in accordance with 6.2.10 except the test specimen shall pass the leak-rate test in 8.3 and the dielectric test in 8.4(3).
3) *Simulation Tests of the Most Severe DBE Environmental Conditions*. One test specimen (or specimens if more than one is required to represent a generic design) shall be exposed to design loss-of-coolant-accident design service conditions, and another test specimen (or specimens if more than one is required to represent a generic design) shall be exposed to design high-energy-line-break design service conditions, excluding the direct impingement of steam jets on the test specimen. Additional test specimens shall be exposed to the service conditions of other DBEs if they produce more severe environmental service conditions than loss-of-coolant accident and high-energy line break. The loss-of-coolant accident and high-energy line break tests which simulate individual DBEs may be combined into one test provided the most severe design service

Copyright © 1983 IEEE All Rights Reserved

Copyright The Institute of Electrical and Electronics Engineers, Inc.
Provided by IHS under license with IEEE
No reproduction or networking permitted without license from IHS Not for Resale

conditions, including pressures, temperatures, humidity, radiation (if not included in the preconditioning), and chemical or demineralized water sprays, and submergence (if required), are used in the combined test. Each test shall meet the following requirements:

a) Margin, as specified in 6.12, shall be applied to the following test parameters: peak pressure, peak temperature, and radiation.

b) Accelerated thermal testing may be used to simulate the temperature-time profile following the major temperature transient(s) of the most severe DBE environmental conditions.[8] Accelerated thermal testing, if used, shall be based on the same methods used for normal service thermal aging as specified in 6.3.2(3).

c) The test shall be conducted with a sufficient number of conductors carrying continuous test current to produce the same total conductor I^2R heating effects as is produced by rated continuous current in all the conductors in the assembly. Not less than 20% of the conductors shall be continuously energized at rated voltage during the test, except for interruptions such as may result from switching or calibration for data acquisition. The conductors to be energized shall be selected to produce the greatest voltage stress between conductors and from conductor to ground.

NOTE — In the current state-of-the-art, devices which interface penetration conductors with field cables may have a lower operating voltage or may have to be derated to a lower operating voltage than the penetration conductor rated voltage due to environmental effects. In this case it may be necessary to energize the test conductors including the interfaces at the lower operating voltage plus margin of 10%. Under these con ditions, the rated voltage of the assembly shall not exceed the operating voltage (without margin) as used in the qualification test.

d) At least one of each type of instrumentation circuit shall have the insulation resistance or leakage current recorded continuously during the test, except for interruptions as may result from switching or calibration for data acquisition. The remainder of the instrumentation circuits shall be energized at rated voltage and their insulation resistance or leakage current measured periodically. The insulation resistance or leakage current shall be within design service condition limits.

e) After the test, the test specimen shall be given the leak-rate test as specified in 8.3.
Where the test specimen does not include the aperture seal, the test specimen shall pass the leak-rate test as specified in 8.3 except that the leak-rate shall not exceed $1 \cdot 10^{-3}$ std cm^3/s.

NOTE — Because of the difficulties of accurately measuring gas-leak rates during the most severe DBE environmental conditions tests, compliance with the above gas-leak rate requirements at design pressure at the end of the test is considered to be adequate verification that containment integrity is maintained during the test.

4) *Rated Short-Time Overload Current and Duration During the Most Severe DBE Environmental Conditions*. Each test specimen shall be dtested as follows:

a) One circuit of each conductor size in the test specimen shall be subjected to an overload current not less than the rated short-time overload current and duration during the most severe DBE environmental conditions as defined in 4.3.2.
The conductor temperature at the start of the test shall not be less than the maximum temperature attained during the test specified in 6.3.3(3) and the pressure shall not be less than design pressure plus margin. Where double conductor seals exist, design pressure may be achieved by pressurizing the internal volume of the electric penetration assembly. The test specimen, during this test, need not be subjected -to other environmental conditions such as chemical or demineralized water spray and steam.

b) After the test, the conductors shall be capable of withstanding rated voltage after the application of the overload current.

c) After the test, the test specimen shall be given the leak-rate test specified in 8.3.
Where the test specimen does not include the aperture seal, the test specimen shall pass the leak-rate test specified in 8.3 except that the leak rate shall not exceed $1 \cdot 10^{-3}$std cm^3/s.

5) *Rated Short-Circuit Current During the Most Severe DBE Environmental Conditions*[9]. Each test specimen shall be tested as follows:

[8] In IEEE Std 323-1983 [17], see time t_n of Fig 1 & 2.

[9] Where the configuration of the test specimen is such that the conductor group contains more than one circuit, the test specimen shall be subjected to the tests in 6.3.3 (5) and (6) in that sequence; however, the conductors tested in 6.3.3 (5) need not be subjected to the test in 6.3.3 (6).
Where the configuration of the test specimen is such that the conductor group contains only one circuit, the tests in 6.3.3 (5) and (6) shall be performed on separate test specimens having the same conductor configurations.

Copyright © 1983 IEEE All Rights Reserved

Copyright The Institute of Electrical and Electronics Engineers, Inc.
Provided by IHS under license with IEEE
No reproduction or networking permitted without license from IHS Not for Resale

a) One circuit of each conductor size in the test specimen shall be subjected to a short-circuit current not less than the rated short-circuit current during the most severe DBE environmental conditions as defined in 4.3.3. The test procedures shall be in accordance with the procedures specified in 6.2.8, paragraphs (1) through (5), except that the conductor temperatures at the start of the test shall not be less than the maximum temperatures attained during the test of 6.3.3(3) and the pressure shall not be leas than design pressure plus margin.
b) After the test, the conductors not subjected to the short-circuit current shall be capable of withstanding rated voltage.
c) After the test, the test specimen shall be given the leak-rate test specified in 8.3.
Where the test specimen does not include the aperture seal, the test specimen shall pass the leak-rate test in 8.3 except that the leak-rate shall not exceed $1 \cdot 10^{-3}$ std cm^3/s.

6) *Rated Short-Circuit Thermal Capacity (I^2t) During the Most Severe DBE Environmental Conditions*5. Each test specimen shall be tested as follows:
a) One circuit of each conductor size in the test specimen shall be subjected to a short-circuit current producing an integrated current ampere squared-seconds not less than the rated short-circuit thermal (I^2t) capacity during the most severe DBE environmental conditions as defined in 4.3.4. The test shall be in accordance with the procedures in 6.2.9 (1) through (5), except that the conductor temperatures at the start of the test shall not be less than the maximum temperatures attained during the test of 6.3.3(3) and the pressure shall not be less than design pressure plus margin.
b) After the test, the conductors not subjected to the short-circuit current shall be capable of withstanding rated voltage after application of the short-circuit current.
c) After the test, the test specimen shall be given the leak-rate test as specified m 8.3.
Where the test specimen does not include the aperture seal, the test specimen shall pass the leak-rate test as specified in 8.3 except that the leak-rate shall not exceed $1 \cdot 10^{-3}$ std cm^3/s.

6.3.4 Determining Qualified Life

The qualified life of the design shall be that period of time represented by the preconditioning of 6.3.2 for which the requirements of 6.3.1 and 6.3.3 have been met. When individual components of a design have a qualified life less than the required installed life of the design, periodic replacement of these components at intervals less than or equal to their qualified life may be used to extend the qualified life of the design to the required installed life.

7. Production Tests

The following production tests shall be performed on each penetration assembly prior to shipment.

7.1 Gas-Leak Rate Test

The gas-leak rate of each electric penetration assembly, exclusive of the aperture seals, shall be determined by testing at design pressure and at 20 °C ± 15 °C (68 °F ± 27 °F) and shall not exceed a rate equivalent to $1 \cdot 10^{-3}$ std cm^3/s of dry nitrogen.

7.2 Pneumatic Pressure Test

Each penetration assembly shall be pneumatically pressure tested in accordance with the ASME Boiler and Pressure Vessel Code [12], Division 1, Section HI, Subsection NE, Article NE-6000. This test may be combined with the leak-rate test of 7.1.

Copyright © 1983 IEEE All Rights Reserved

Copyright The Institute of Electrical and Electronics Engineers, Inc.
Provided by IHS under license with IEEE
No reproduction or networking permitted without license from IHS Not for Resale

7.3 Dielectric-Strength Test

Each penetration assembly conductor shall receive a dielectric-strength test at test facility room ambient conditions of temperature, pressure, and relative humidity.

7.3.1 Medium-Voltage Conductors

Medium-voltage power conductors shall be tested in accordance with 6.2.3(1).

7.3.2 Low-Voltage Conductors

Low-voltage power and control conductors shall be tested in accordance with 6.2.3(1).

NOTE — As an alternate, the test time may be reduced to 1 s minimum at a test voltage 120% of that defined above.

7.3.3 Instrumentation Conductors

Instrumentation conductors shall be tested in accordance with 6.2.3(3).

7.4 Insulation-Resistance Test

Each electric penetration assembly conductor and termination (when furnished as an integral part of the assembly) shall receive an insulation-resistance test in accordance with 6.2.4.

7.5 Conductor Continuity and Identification Tests

Electrical continuity and the identification of each penetration assembly conductor shall be verified. The permanent identification of each conductor at both ends of the assembly shall be verified during the continuity test.

7.6 Partial Discharge (Corona) Test

Medium-voltage power conductors shall be tested, including cables and splices which are an integral part of the electric penetration assembly, in accordance with 6.2.5.

Where external power cables are part of the completed assembly, the minimum extinction voltage shall be determined by testing the completed assembly including the cables and connectors.

8. Installation and Field Testing as Part of Installation

8.1 Installation and Testing Standard

The penetration assembly shall be installed, inspected, and tested in accordance with ASME Boiler and Pressure Vessel Code [12], Division 1, Section III, Subsection NE for Class MC Components, and in accordance with applicable parts of ANSI/IEEE Std 336-1980 [8].

8.2 Installation Procedures

The installation procedures shall include adequate measures to prevent damage to the electric penetration assembly.

Copyright © 1983 IEEE All Rights Reserved

Copyright The Institute of Electrical and Electronics Engineers, Inc.
Provided by IHS under license with IEEE
No reproduction or networking permitted without license from IHS Not for Resale

8.3 Leak-Rate Test

A gas-leak rate test shall be performed on each electric penetration assembly, including the aperture seal(s), when the installation has been completed. The test shall be performed with the equivalent leak-rate of dry nitrogen at design pressure and at ambient temperature. The total leak.rate shall not exceed a value equivalent to $1 \cdot 10^{-2}$ std cm^3/s of dry nitrogen.

NOTE — When the method of penetration attachment is by welding, the aperture seals (the weldments) should be tested as part of the containment integrated leak-rate test.

8.4 Electrical Tests

After the penetration assembly is installed, each conductor may be given the following tests:

1) *Continuity*.
2) *Insulation—Resistance*. If insulation-resistance tests are performed, they shall comply with 6.2.4, except that the insulation resistance shall not be less than 1/10 the values specified therein.
3) Dielectric Strength. If dielectric-strength tests are performed, they shall comply with 6.2.3(1) and (3), except that the test voltages used for the power frequency voltage tests in 6.2.3(1) shall not exceed 75% of the values specified therein. Impulse testing in the field is neither required nor recommended.

The preceding electrical tests may be performed before or after external (field) cables are connected to the penetration assembly; however, when performing dielectric tests after the connection of external cables or equipment, the manufacturer's maximum test voltage for the connected cables or equipment should be considered in the determination of test voltages.

9. Quality Control and Quality Assurance Requirements

9.1 Materials, Processes, and Personnel

The quality control and the quality assurance requirements for all materials, processes, and personnel as required by 5.1.1 shall be in accordance with the requirements set forth in the ASME Boiler and Pressure Vessel Code [12], Division 1, Section III, Subsection NCA, Article NCA-4000.

For items not covered by the ASME Boiler and Pressure Vessel Code [12] the quality assurance requirements for the design, construction, installation, and testing of electric penetration assemblies shall be in accordance with the requirements set forth in ANSI N45.2-1977 [3] and ANSI/IEEE Std 336-1980 [8].

9.2 Records

All certification and test records shall be in accordance with the ASME Boiler and Pressure Vessel Code [12], Division 1, Section III, Subsection NCA, and with ANSI N45.2-1977 [3], as applicable.

9.3 Documentation of Design Qualification

Documentation of design qualification shall be in accordance with IEEE Std 323-1983 [17], Section 8.

Copyright © 1983 IEEE All Rights Reserved

Copyright The Institute of Electrical and Electronics Engineers, Inc.
Provided by IHS under license with IEEE
No reproduction or networking permitted without license from IHS Not for Resale

9.4 Assembly Nameplate

Each electric penetration assembly shall, as a minimum, be permanently identified as required by the ASME Boiler and Pressure Vessel Code [12], Division 1, Section III, Subsection NCA, Article NCA-8000.

9.5 Data and Ratings

Data and ratings for each electric penetration assembly shall be recorded and maintained as part of the permanent records. Modifications or revisions shall be recorded by the owner or his agent. The data and ratings of each electric penetration assembly shall be in accordance with this standard and shall include the following information where applicable:

1) Manufacturer's name and year of manufacture.
2) Unique identification number.
3) Qualified life in years. Specify any replaceable components on which qualification is based and specify replacement intervals.
4) Service classification.
5) Rated voltage.
6) Rated continuous current(s).
7) Rated short-time overload current(s) and duration.
8) Rated short-circuit current(s) and X/R ratio determined by test data.
9) Rated short-circuit thermal capacity.
10) Continuous temperature design limits as follows: (1) containment nozzle-concrete interface temperature, (b) electrical insulation system temperature, and (c) allowable normal ambient temperature range inside and outside of containment.
11) Design pressure and temperature.
12) Minimum design temperature.
13) Design basis event temperatures, pressure, humidity, chemical or demineralized water spray, submergence, and duration in the design service conditions.
14) Radiation type(s), integrated dose, and dose rate covering normal operation and DBEs in the design service conditions.
15) Instrumentation, coaxial, triaxial, and thermocouple ratings as defined by the design service conditions.
16) The input motion spectrum in the design service conditions for which the assembly is seismically qualified.
17) Complete spare parts list. The following data shall be given for each part:
    a) Identification, such as part number
    b) Description
    c) Characteristics or ratings
    d) Manufacturer
    e) Manufacturer's catalog number or model
    f) Special requirements, modifications, quality control inspections, and acceptance tests shall be specified where applicable.

    Data for items (c), (d), (e), and (f) may be omitted for parts which have no special requirements and which can be categorized as commercial grade parts, the use of which will not affect the qualification of the equipment.
18) Tabulation of I^2t values for each power and control conductor size which will meet the conditions of 4.3.4, except extended to cover the time range up to 1000 s.

Copyright © 1983 IEEE All Rights Reserved

Copyright The Institute of Electrical and Electronics Engineers, Inc.
Provided by IHS under license with IEEE
No reproduction or networking permitted without license from IHS
Not for Resale

10. Requirements for Purchaser's Specification

10.1 General

The minimum requirements of an owner's design specification for electric penetration assemblies are outlined in 10.2. Attention is directed to possible abnormal or special requirements, not addressed in the design, ratings, or test requirements sections of this standard, which may be unique, by virtue of application or design, to the electric penetration assemblies required for the owner's nuclear power generating station.

10.2 Recommended Outline for Purchaser's Specification

1) Scope of requirements
2) Work not included
3) Codes, standards, and guides (both industry and purchaser unique)
4) Service conditions and environmental conditions
5) Installed life
6) General description of containment structure
7) Service classification, ratings, and related capabilities
8) Physical details of nozzles, mountings, and supports
9) Design qualification requirements
10) Nonstandard production tests
11) Drawings, documentation, data, and information required from the seller
12) Inspecting, quality assurance/quality control requirements
13) Packaging, shipping, handling, and storage requirements
14) List of electric penetration assemblies by service classification and rating
15) Electric penetration assembly seismic requirements.

10.3 Guide to Design Specification Data Requirements and Contents

10.3.1

ASME Boiler and Pressure Vessel Code [12] requirements for the Design Specifications:

1) Refer to Division 1, Section III, Subsection NCA, Article NCA-3250 and Appendix B for Code requirements for the Design Specification, which includes:
   a) Functions
   b) Design requirements
   c) Code classification
   d) Definition of pressure boundary
   e) Material requirements including impact tests when applicable.
2) Refer to Division 1, Section III, Subsection NCA, Article NCA-3260 requirements for:
   a) Owner review of design reports
   b) Owner requirements for certification of review of design reports.

10.3.2

A list of applicable codes, standards, and guides:

1) Industry codes, standards, and guides
2) Federal or local regulations, or both
3) Owner's unique standards or specifications

Copyright © 1983 IEEE All Rights Reserved

Copyright The Institute of Electrical and Electronics Engineers, Inc.
Provided by IHS under license with IEEE
No reproduction or networking permitted without license from IHS Not for Resale

10.3.3

For power and control assemblies, specify under service classification and rating

1) Nominal system voltage
2) Rated voltage
3) Rated continuous current for all specified service conditions
4) Rated short-time overload current and duration for all specified service conditions
5) Rated short-circuit current
6) Rated short-circuit thermal capacity
7) Continuous current capability and duration during most severe DBE environmental service conditions
8) Maximum permissible short-circuit thermal capability during most severe DBE environmental service conditions.

NOTE — Except for 10.3.3 (1), (2), and (3), each of the above ratings is based on one circuit involvement while remaining circuits carry rated continuous current as applicable for the penetration service condition. System design should dictate the validity of the ratings as established by this standard. Should it be possible for an electric penetration assembly to see a multiplicity of the events (for example, short-circuit currents in more than one circuit) or any of the events in combination at any one time, the owner's design specification shall specify such special requirements which are not included in the ratings described by this standard.

10.3.4

For instrumentation electric penetration assemblies, specify under service classification ratings, under design qualification and production tests, and under installation and field test, as appropriate:

1) Insulation resistance and test voltage
2) Nominal system voltage
3) Voltage rating (instrumentation penetrations may have conductors with different voltage ratings)
4) Dielectric-strength test requirements
5) Shielding requirements or treatment to minimize electromagnetic, electrostatic, and inter-circuit interference
6) Rated continuous current
7) Impedance and pulse transmission characteristics of coaxial and triaxial conductors.

10.3.5

Specify the required number of conductors for each assembly. Indicate penetration conductor interface with field conductors; for example, terminal blocks, in-line splices, plugs and receptacles, etc. Indicate requirements for terminal boxes and their classification, provisions for entrance of field cables and their support.

10.3.6

Specify any special conductor identification requirements.

10.3.7

Specify special test requirements.

10.3.8

Clearly indicate specified values in the owner's design specification that do not include margin requirements for design qualification.

Copyright © 1983 IEEE All Rights Reserved

Copyright The Institute of Electrical and Electronics Engineers, Inc.
Provided by IHS under license with IEEE
No reproduction or networking permitted without license from IHS Not for Resale

10.3.9

Specify single or double seal concept and required provisions for periodic leak rate monitoring.

10.3.10

Provide drawings indicating nozzle inside diameter (ID), outside diameter (OD), length, material, dimensions in relation to liner or containment wall, electric penetration mounting interface, and location (that is, elevation, etc).

10.3.11

Specify penetration assembly finish, painting, or protective coating requirements.

10.3.12

Specify seismic response spectra at each penetration location.

10.3.13

Indicate any special installation requirements or restrictions.

10.3.14

Specify any special fire hazard requirements.

10.3.15

Specify shipping and storage requirements including:

1) Required assembly pressurization for intransit and in-storage leakage monitoring
2) Method of shipment
3) Storage environment
4) Temperature (see 5.1.3 for minimum design temperature)

Copyright © 1983 IEEE All Rights Reserved

Copyright The Institute of Electrical and Electronics Engineers, Inc.
Provided by IHS under license with IEEE
No reproduction or networking permitted without license from IHS Not for Resale

Annex A Preferred Values (Informative)

(The following Appendixes are not a part of IEEE Std 317-1983, IEEE Standard for Electric Penetration Assemblies in Containment Structures for Nuclear Power Generating Stations.)

A.1 Conductor Density

The recommended maximum number of conductors which can be accommodated in a standard electric penetration assembly for a 12 in Schedule 80 nozzle.

A.1.1 Low-Voltage Power, Control, or Instrumentation Service

Conductor Size	Number of Conductors
AWG No 16	504
AWG No 14	483
AWG No 12	441
AWG No 10	210
AWG No 8	150
AWG No 6	150
AWG No 4	126
AWG No 2	72
AWG No 1/0	42
AWG No 2/0	21
AWG No 3/0	21
AWG No 4/0	21
MCM No 250	15
MCM No 350	15
MCM No 500	12
MCM No 750	3
MCM No 1000	3
Twinax	16
Triax	16
Coax	24

Copyright © 1983 IEEE All Rights Reserved

Copyright The Institute of Electrical and Electronics Engineers, Inc.
Provided by IHS under license with IEEE
No reproduction or networking permitted without license from IHS
Not for Resale

A.1.2 Medium-Voltage Power Service

Conductor Size	Number of Conductors
MCM No 250	3
MCM No 350	3
MCM No 500	3
MCM No 750	3
MCM No 1000	3

NOTE — For voltage ratings of 8 kV to 15 kV an 18 in Schedule 80 nozzle is preferred. The recommended number of conductors per nozzle is the same as in A.1.2.

A.2 Rated Continuous Current

The rated continuous current for power and control electric penetrations installed in a 12 in nozzle under normal service conditions (containment ambient temperature of 50 °C) is defined in Table A-1.

Copyright © 1983 IEEE All Rights Reserved
Copyright The Institute of Electrical and Electronics Engineers, Inc.
Provided by IHS under license with IEEE
No reproduction or networking permitted without license from IHS
Not for Resale

Table A-1

(A) Conductor Size	(B) Quantity of Conductors	(C) Maximum Amperes Conductors	(D) Amperes/ Conductor (NOTE 3)
AWG No 16	504	11 (NOTE 1)	3.3
AWG No 14	483	12 (NOTE 1)	4.3
AWG No 12	441	16 (NOTE 1)	5.6
AWG No 10	210	22 (NOTE 1)	10.0
AWG No 8	150	28 (NOTE 1)	15.0
AWG No 6	150	41 (NOTE 1)	19.0
AWG No 4	126	55 (NOTE 1)	27.0
AWG No 2	72	74 (NOTE 1)	44.0
AWG No 1/0	42	100 (NOTE 1)	73.0
AWG No 2/0	21	116 (NOTE 1)	116.0
AWG No 3/0	21	135 (NOTE 1)	131.0
AWG No 4/0	21	157 (NOTE 1)	148.0
MCM No 250	15	174 (NOTE 1)	See Column (C)
MCM No 350	15	217 (NOTE 1)	See Column (C)
MCM No 500	12	270 (NOTE 1)	See Column (C)
MCM No 750	3	557 (NOTE 2)	See Column (C)
MCM No 1000	3	660 (NOTE 2)	See Column (C)

NOTES:

1 — Calculated using NFPA-70-1981, [11], Table 310-17 for 90 °C rated insulated conductor corrected for operation in the nozzle ambient of 71 °C to 80 °C (derate factor 0.41). This is the maximum continuous current per conductor.

2 — Derate factor of 0.58 was used for operation in a nozzle ambient of 61 °C to 70 °C.

3 — Calculated on the basis of dissipating 30 W/ft of nozzle length so as to limit the nozzle-concrete interface temperature to 150 °F with each conductor carrying the current shown in Column D.

$I^2 \cdot R \cdot N = 30$

where

I= rated continuous current
N= the number of conductors
R= (values for R are given in Table A-2)

For free-standing steel containments or concrete containments with interface temperature limits other than 150 °F, the manufacturer should be consulted for continuous current ratings.

Values are resistance per foot of conductor at 90 °C.

4 — For a mixture of conductor sizes within a single penetration or for unequal loading of conductors of the same size within a penetration, the rated continuous currents may be determined from:
$\Sigma I^2 \cdot R \cdot N = 30$

Copyright © 1983 IEEE All Rights Reserved

Copyright The Institute of Electrical and Electronics Engineers, Inc.
Provided by IHS under license with IEEE
No reproduction or networking permitted without license from IHS
Not for Resale

Table A-2

Conductor Size	R ($\cdot 10^{-3}$) (ohms)	Conductor Size	R ($\cdot 10^{-3}$) (ohms)
AWG No 16	5.55	MCM No 250	0.05609
AWG No 14	3.41	MCM No 350	0.04006
AWG No 12	2.15	MCM No 500	0.02775
AWG No 10	1.35	MCM No 750	0.0185
AWG No 8	0.849	MCM No 1000	0.01388
AWG No 6	0.5338		
AWG No 4	0.3360		
AWG No 2	0.2113		
AWG No 1/0	0.1329		
AWG No 2/0	0.1054		
AWG No 3/0	0.08358		
AWG No 4/0	0.06559		

A.3 Rated Short-Circuit Current

(See 4.2.4 and 4.3.3.)

Values based on current industry practice.

A.3.1 Low-Voltage Power and Control Service

Table A-3—

Conductor Size	Symmetrical Current I (rms Value of AC Component) (Amperes)
AWG No 14	1400
AWG No 12	2300
AWG No 10	3600
AWG No 8	6000
AWG No 6	8800
AWG No 4	12500
AWG No 2	16500
AWG No 1/0	20000
AWG No 2/0	22000
AWG No 3/0	23500
AWG No 4/0	26000
MCM No 250	28000
MCM No 350	30000
MCM No 500	33000
MCM No 750	36000
MCM No 1000	40000

Table A-3 applies for all environmental conditions.

Copyright © 1983 IEEE All Rights Reserved

Copyright The Institute of Electrical and Electronics Engineers, Inc.
Provided by IHS under license with IEEE
No reproduction or networking permitted without license from IHS Not for Resale

A.3.2 Medium-Voltage Service

Table A-4

Conductor Size	Symmetrical Current I (rms Value of AC Component) (Amperes)
MCM No 250	30000
MCM No 350	40000
MCM No 500	50000
MCM No 750	50000
MCM No 1000	50000

Table A-4 applies for all environmental conditions.

A.4 Rated Short-Circuit Thermal Capacity (I^2t)

(See 4.2.5 and 4.3.4.)

Values based on ICEA 32-382-1969 [14] for 90 °C rated insulation.

Table A-5

Conductor Size	I^2t (Ampere Squared-Seconds)
AWG No 14	8.74E4
AWG No 12	2.21E5
AWG No 10	5.58E5
AWG No 8	1.41E6
AWG No 6	3.56E6
AWG No 4	9.01E6
AWG No 2	2.28E7
AWG No 1/0	5.77E7
AWG No 2/0	9.17E7
AWG No 3/0	1.46E8
AWG No 4/0	2.32E8
MCM No 250	3.24E8
MCM No 350	6.34E8
MCM No 500	1.29E9
MCM No 750	2.91E9
MCM No 1000	5.18E9

Table A-5 applies for all environmental conditions.

Copyright © 1983 IEEE All Rights Reserved

Copyright The Institute of Electrical and Electronics Engineers, Inc.
Provided by IHS under license with IEEE
No reproduction or networking permitted without license from IHS
Not for Resale

Annex B Electric Penetration Interfaces (Informative)

Figures B-1 and B-2 show suggested electric penetration assembly interface with the containment aperture.

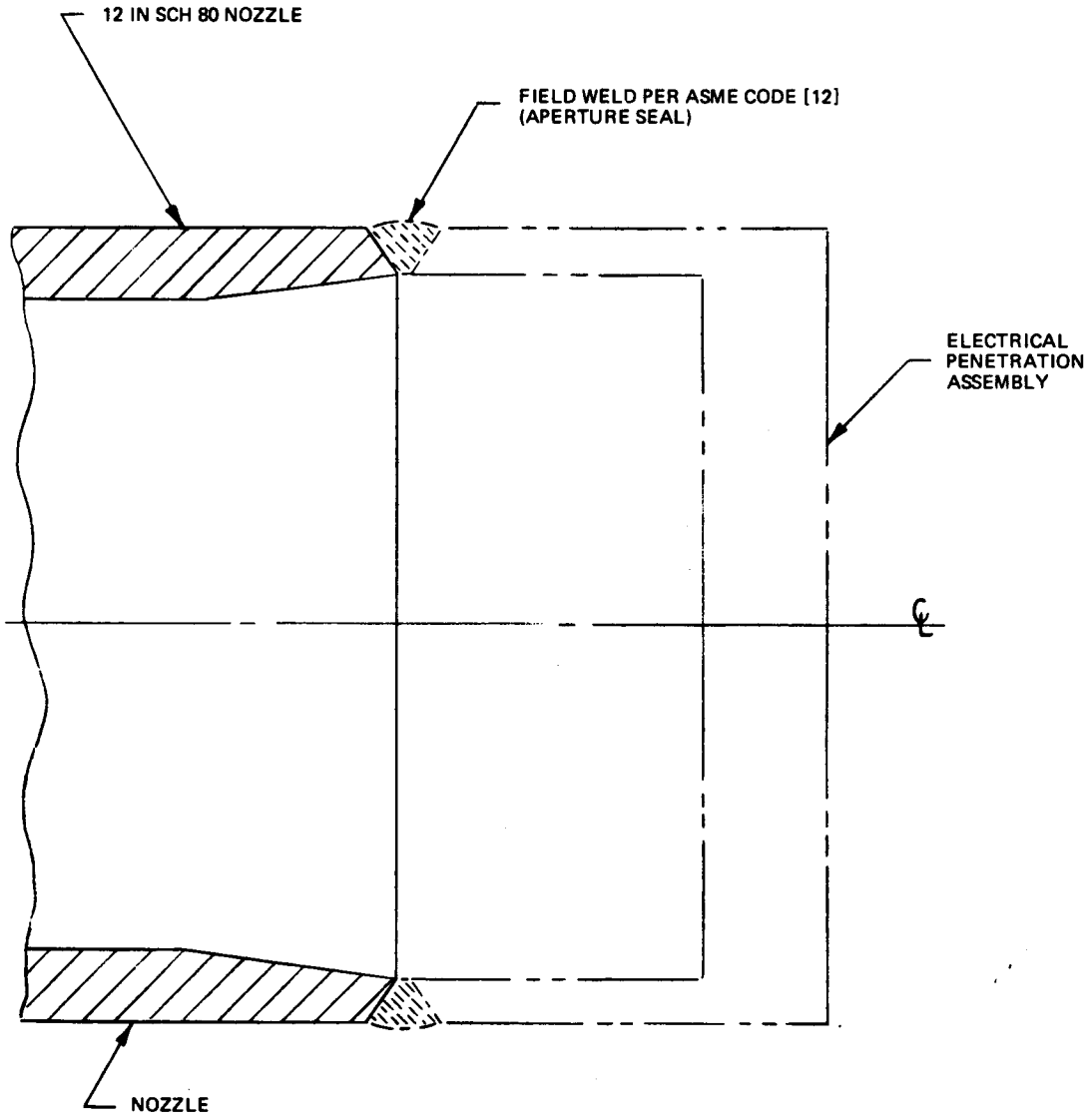

Figure B-1—Weld-In Interface

Copyright © 1983 IEEE All Rights Reserved

Copyright The Institute of Electrical and Electronics Engineers, Inc.
Provided by IHS under license with IEEE
No reproduction or networking permitted without license from IHS
Not for Resale

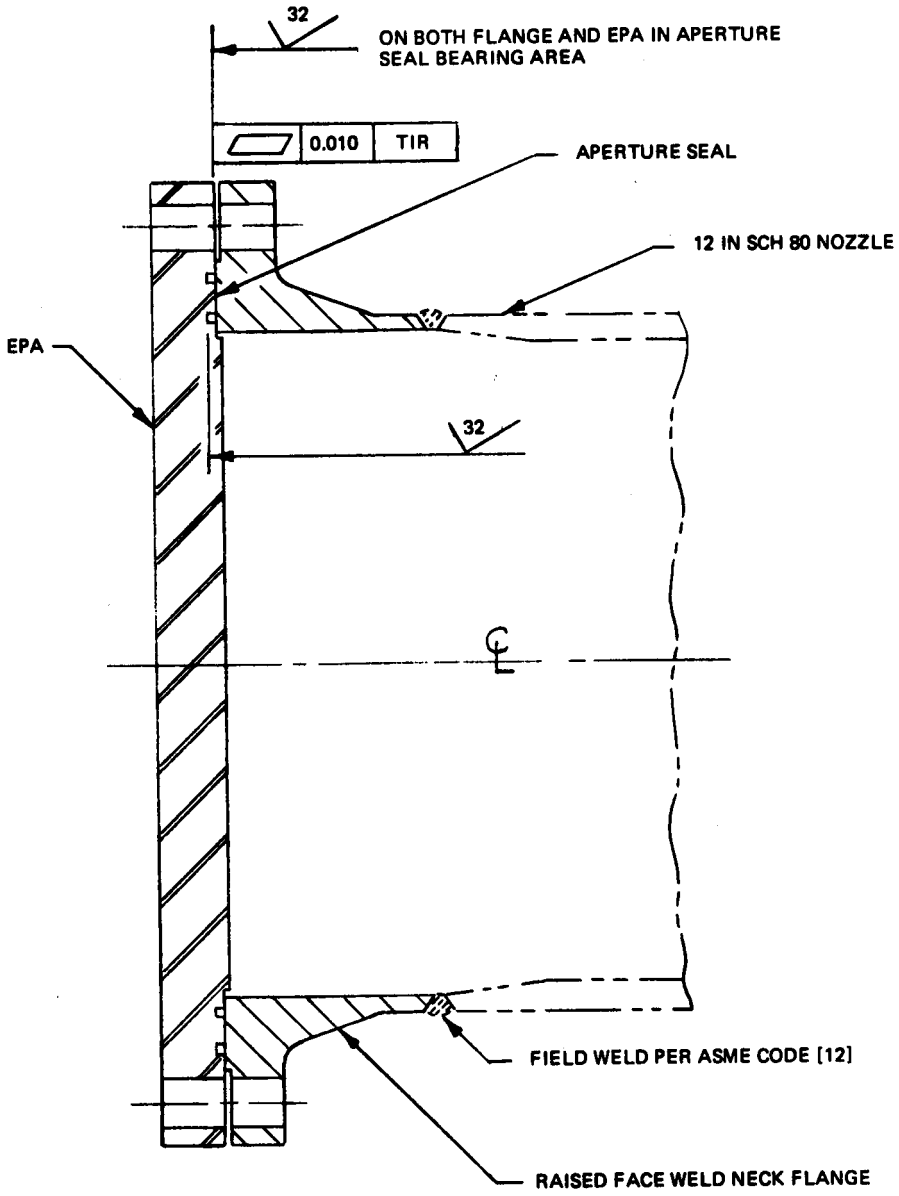

Figure B-2—Bolt-On Interface

Copyright © 1983 IEEE All Rights Reserved

Copyright The Institute of Electrical and Electronics Engineers, Inc.
Provided by IHS under license with IEEE
No reproduction or networking permitted without license from IHS
Not for Resale

Annex C Penetration Assembly Configuration (Informative)

C.1 Penetration Assembly Detail

Figure C-1 identifies various components that constitute a typical electric penetration assembly.

C.2 ASME Pressure Boundary

Figures C-1 and C-2 define the ASME pressure boundary for a typical outboard installed penetration assembly and a typical inboard installed penetration assembly, respectively.

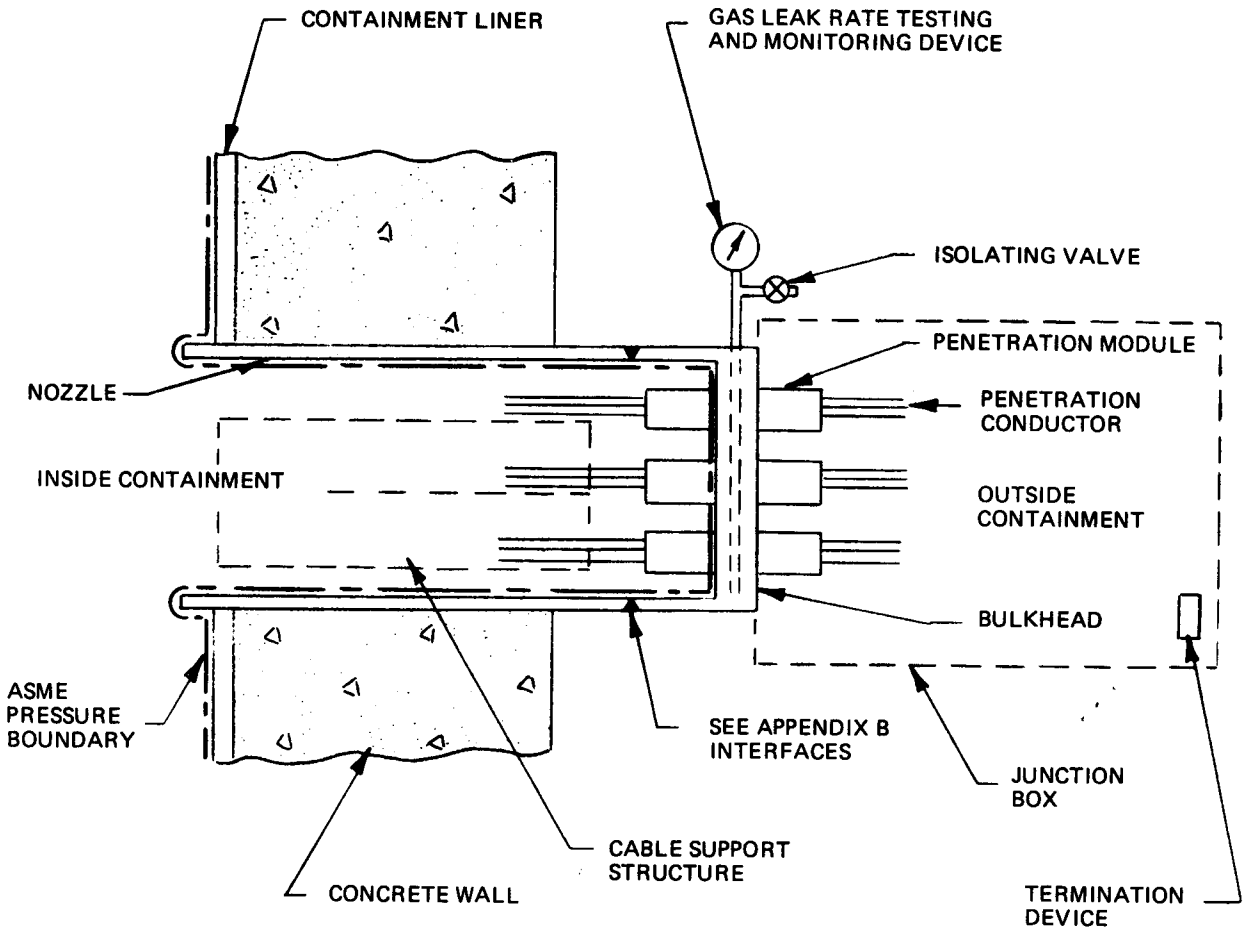

Figure C-1—Typical Outboard Installed Penetration Assembly Including ASME Pressure Boundary

Copyright © 1983 IEEE All Rights Reserved

Copyright The Institute of Electrical and Electronics Engineers, Inc.
Provided by IHS under license with IEEE
No reproduction or networking permitted without license from IHS
Not for Resale

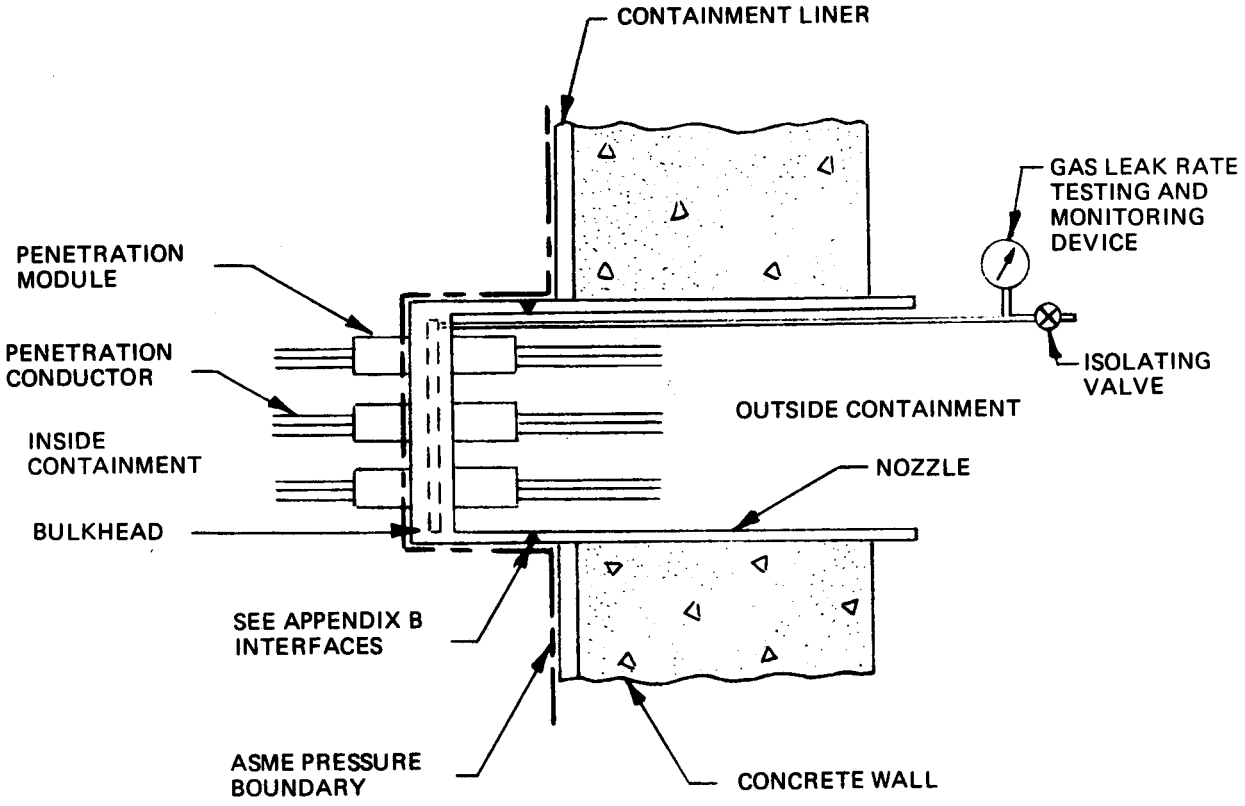

Figure C-2—Typical Inboard Installed Penetration Assembly Including ASME Pressure Boundary (Cable Trays, Junction Boxes and Other Optional Attachments not Shown)

Copyright © 1983 IEEE All Rights Reserved

Copyright The Institute of Electrical and Electronics Engineers, Inc.
Provided by IHS under license with IEEE
No reproduction or networking permitted without license from IHS
Not for Resale

Annex D Thermal-Life Test Procedures (Informative)

D.1 Recommended Procedures for Thermal-Life Tests

D.1.1 Objectives

Recommended procedures for thermal-life testing to establish (1) the thermal-life of electric penetration assemblies, and (2) thermal-life data to provide the basis for accelerated aging in type testing are as follows:

D.1.2 General Requirements

Electric penetration assemblies generally consist of insulated conductors, seals for components, cable supports, and conductor seal and insulation systems fabricated into modules, all of which may have unique thermal-life characteristics. It is, therefore, necessary to perform thermal-life tests on each of the above components to establish the objectives in D.1.1 for the entire assembly.

The procedures for thermal-life tests should follow IEEE Std 98-1983 [15] and the analysis of test data should follow IEEE Std 101-1972 (R 1980) [16].

Components having established standards which include thermal-life tests may be tested in accordance with their respective standard; for example, insulated cables should be tested in accordance with ANSI/IEEE Std 383-1974 (R 1980) [10].

Components made of materials which have been proven, by test or operating experience (where records are available) in accordance with IEEE Std 323-1983 [17], Section 8. and long-term use, not to be degraded by thermal aging need not be included as long as auditable data is provided to owner.

Thermal-life tests of conductor modules and seals shall be in accordance with the following general procedures:

D.1.3 General Procedures

D.1.3.1 Test Program

A test program shall be prepared including the following items:

1) Selection of test specimens
2) Preparation of test specimens
3) Number of test specimens
4) Temperature exposures
5) Failure criteria
6) Determination of thermal-life characteristics
7) Determination of thermal-life.

D.1.3.2 Selection of Test Specimens

Test specimens shall:

1) Be of the same generic design as the production units
2) Be manufactured using production facilities and processes which are representative of those used for the production units
3) Be of such configuration as to produce thermal, electrical, and mechanical stresses representative of the design being qualified.

--`,,`-`-`,,`,,`,`,,`---
Copyright © 1983 IEEE All Rights Reserved

Copyright The Institute of Electrical and Electronics Engineers, Inc.
Provided by IHS under license with IEEE
No reproduction or networking permitted without license from IHS
Not for Resale

NOTE — Some assembled components which include materials (such as elastomers) that exhibit deformation during accelerated aging at elevated temperatures are not representative of what occurs due to normal aging. In these cases component accelerated aging should be used rather than accelerated aging of the complete assembly.

D.1.3.3 Preparation of Test Specimens

Test specimens shall be fabricated using manufacturing facilities and processes which are representative of those used for the production units.

D.1.3.4 Number of Test Specimens

Not less than three specimens of each voltage rating shall be tested at each temperature. Each specimen shall include both large and small size conductors, representative of the range of conductor sizes to be qualified; however, where this is not practical, additional specimens may be used, provided at least three specimens of each conductor arrangement are tested at each temperature.

D.1.3.5 Temperature Exposure

The temperature exposures should be selected in accordance with IEEE Std 98-1983 [15], with the following requirements:

1) Not less than four temperatures, which differ by at least 25 °C, shall be selected for the thermal-life tests.
2) The lowest temperature shall result in an average thermal-life of at least 5000 h.
3) The highest temperature shall not result in failures in less than 100 h of exposure.

D.1.3.6 Failure Criteria

Each test specimen shall be tested for failure at the end of each temperature exposure cycle in accordance with the following:

Copyright © 1983 IEEE All Rights Reserved

Copyright The Institute of Electrical and Electronics Engineers, Inc.
Provided by IHS under license with IEEE
No reproduction or networking permitted without license from IHS Not for Resale

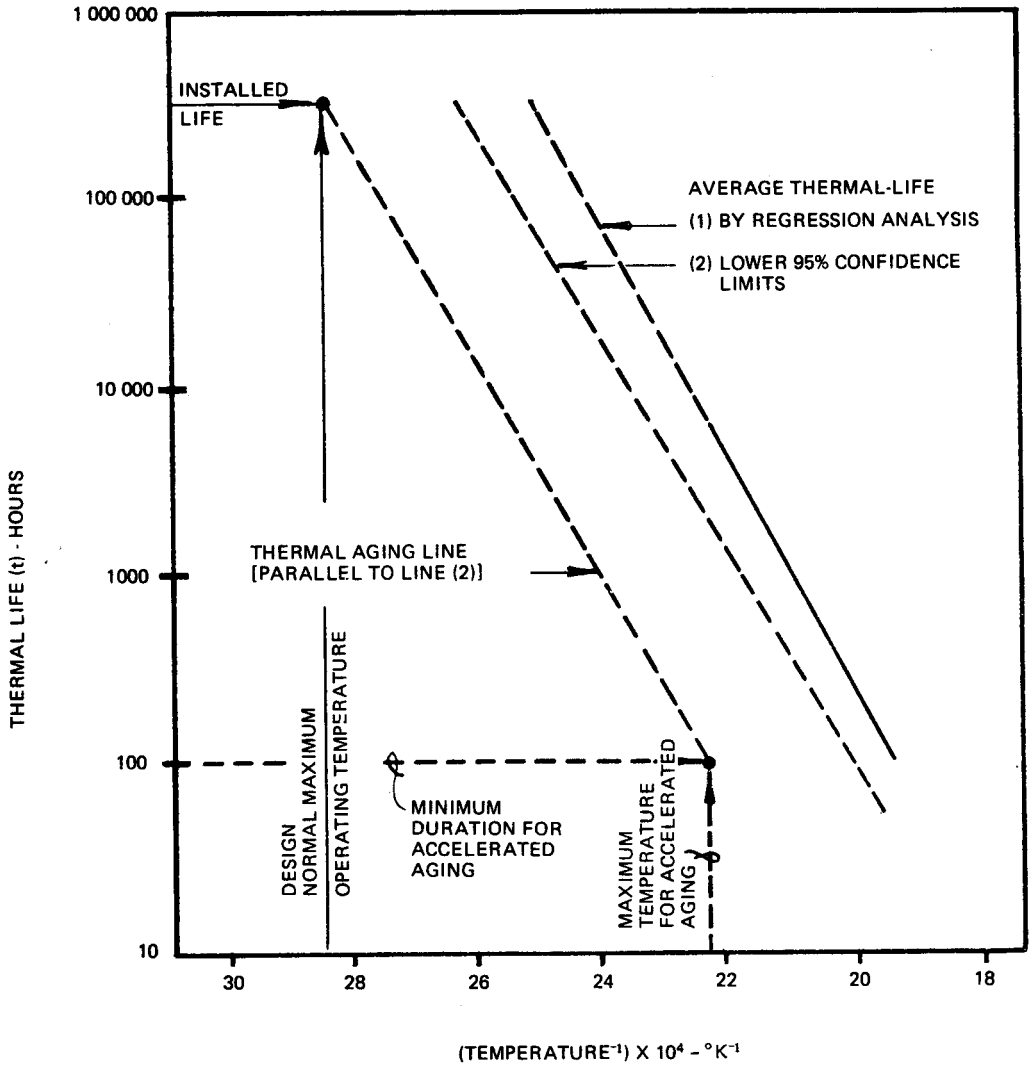

Figure D-1—Example of Thermal-Life Characteristics

1) *Conductor Modules*
   a) Leak-Rate Test. The module is considered to have failed when the gas-leak rate exceeds $1 \cdot 10^{-3}$ std cm^3/s of dry nitrogen divided by the maximum number of modules in an electric penetration assembly at the design pressure and ambient temperature.
   b) Dielectric Test. The module is considered to have failed if it does not withstand the dielectric test in 8.4.
2) *Seals*
   a) Same as D.1.2.6(1)(a).

Copyright © 1983 IEEE All Rights Reserved

Copyright The Institute of Electrical and Electronics Engineers, Inc.
Provided by IHS under license with IEEE
No reproduction or networking permitted without license from IHS Not for Resale

D.1.3.7 Determination of Thermal-Life Characteristics

The following thermal-life lines shall be determined from the failure data using the procedures in IEEE Std 101-1972 (R 1980) [16]:

1) Average thermal-life line by regression analysis
2) Lower 95% confidence limit of average thermal-life line. All evaluations of thermal-life shall be based on D.1.2.6(2) (that is, the lower 95% confidence line of average thermal-life line). The thermal-life characteristics should be displayed similar to Fig D-1.

D.1.3.8 Determination of Thermal-Life

The thermal-life line (Fig D-1, Line [2]) may be extended by linear extrapolation to the required installed life to demonstrate that the projected thermal-life of the component being tested at its normal maximum operating temperature exceeds the required installed life. This evaluation shall be made for each component in the electric penetration assembly.

D.1.4 Accelerated Thermal-Aging

The temperature for accelerated thermal-aging should be determined by the following:

1) Plot the thermal-aging line for the component from a point at the installed life and design normal maximum operating temperature and parallel to the average thermal-life Line (2). See dotted thermal-aging line in Fig D-1.
2) The thermal-aging test should be conducted for a duration of not less than 100 h at the temperature on the thermal-aging line corresponding to the test duration.

D.2 Simulation of LOCA Conditions by Accelerated Thermal-Life Testing

D.2.0 Objectives

The following paragraphs give recommended procedures for the simulation of DBE conditions after the peak transient conditions (that is, after time t_n of IEEE Std 323-1983 [17], Fig 1, Section 7.) to permit reducing the test duration by accelerated thermal-life testing.

Copyright © 1983 IEEE All Rights Reserved

Copyright The Institute of Electrical and Electronics Engineers, Inc.
Provided by IHS under license with IEEE
No reproduction or networking permitted without license from IHS Not for Resale

D.2.1 General Requirements

The duration and temperature used for the accelerated thermal-life testing in Appendix D2 shall be based on the following relation:

$$t\mathrm{E}^{-B/T} = \sum_{i=1}^{n} t\mathrm{E}^{-B/T\mathrm{i}}$$

where

t = duration of accelerated thermal test (hours)
T = temperature during accelerated test (° kelvin)
B = thermal-life constant from the thermal-aging line in Fig D-1 of Appendix D1

$$= \frac{[\log_{\mathrm{e}}{}^{(t_2/t_1)}]}{\left(\frac{1}{T_2} - \frac{1}{T_1}\right)}$$

where t, t and T, T are thermal-lifes and Temperatures, respectively from 2 points on the thermal-aging line.

t and T = duration (hours) and Temperature (° K) respectively for each interval (i) in the specified DBE conditions from the last peak Transient t_n, of IEEE Std 323-1983 [17], Fig 1, Section 7. to the end of the event.

n = number of intervals.

Copyright © 1983 IEEE All Rights Reserved

Copyright The Institute of Electrical and Electronics Engineers, Inc.
Provided by IHS under license with IEEE
No reproduction or networking permitted without license from IHS Not for Resale