STD.IEEE 309-ENGL 1999 ■ 4805702 0570713 672 ■

IEEE Std 309-1999
ANSI N42.3-1999
(Revision of
IEEE Std 309-1970
ANSI N42.3-1969)

IEEE Standard Test Procedures and Bases for Geiger-Mueller Counters

Circuits and Devices

Communications Technology

Computer

Electromagnetics and Radiation

Energy and Power

IEEE Nuclear and Plasma Sciences Society

Sponsored by the
Nuclear Instruments and Detectors Committee

Signals and Applications

Standards Coordinating Committees

IEEE

Published by the Institute of Electrical and Electronics Engineers, Inc., 345 East 47th Street, New York, NY 10017, USA.

4 June 1999

SH94739

IEEE Std 309-1999/ANSI N42.3-1999

Copyright The Institute of Electrical and Electronics Engineers, Inc.
Provided by IHS under license with IEEE
No reproduction or networking permitted without license from IHS

Not for Resale

IEEE Std 309-1999
ANSI N42.3-1999
(Revision of
IEEE Std 309-1970
ANSI N42.3-1969)

IEEE Standard Test Procedures and Bases for Geiger-Mueller Counters

Sponsor

Nuclear Instruments and Detectors Committee
of the
IEEE Nuclear and Plasma Sciences Society

Approved 18 March 1999

IEEE-SA Standards Board

Approved 12 May 1999

American National Standards Institute

Abstract: Test procedures for Geiger-Mueller counters that are used for the detection of ionizing radiation are presented so that they have the same meaning to both manufacturers and users. Also included is information on bases (i.e., connections) for the counters.
Keywords: gas counters, Geiger-Mueller, radiation detectors

The Institute of Electrical and Electronics Engineers, Inc.
345 East 47th Street, New York, NY 10017-2394, USA

Copyright © 1999 by the Institute of Electrical and Electronics Engineers, Inc.
All rights reserved. Published 4 June1999. Printed in the United States of America.

Print: ISBN 0-7381-1656-4 SH94739
PDF: ISBN 0-7381-1657-2 SS94739

No part of this publication may be reproduced in any form, in an electronic retrieval system or otherwise, without the prior written permission of the publisher.

Copyright The Institute of Electrical and Electronics Engineers, Inc.
Provided by IHS under license with IEEE
No reproduction or networking permitted without license from IHS Not for Resale

IEEE Standards documents are developed within the IEEE Societies and the Standards Coordinating Committees of the IEEE Standards Association (IEEE-SA) Standards Board. Members of the committees serve voluntarily and without compensation. They are not necessarily members of the Institute. The standards developed within IEEE represent a consensus of the broad expertise on the subject within the Institute as well as those activities outside of IEEE that have expressed an interest in participating in the development of the standard.

Use of an IEEE Standard is wholly voluntary. The existence of an IEEE Standard does not imply that there are no other ways to produce, test, measure, purchase, market, or provide other goods and services related to the scope of the IEEE Standard. Furthermore, the viewpoint expressed at the time a standard is approved and issued is subject to change brought about through developments in the state of the art and comments received from users of the standard. Every IEEE Standard is subjected to review at least every five years for revision or reaffirmation. When a document is more than five years old and has not been reaffirmed, it is reasonable to conclude that its contents, although still of some value, do not wholly reflect the present state of the art. Users are cautioned to check to determine that they have the latest edition of any IEEE Standard.

Comments for revision of IEEE Standards are welcome from any interested party, regardless of membership affiliation with IEEE. Suggestions for changes in documents should be in the form of a proposed change of text, together with appropriate supporting comments.

Interpretations: Occasionally questions may arise regarding the meaning of portions of standards as they relate to specific applications. When the need for interpretations is brought to the attention of IEEE, the Institute will initiate action to prepare appropriate responses. Since IEEE Standards represent a consensus of all concerned interests, it is important to ensure that any interpretation has also received the concurrence of a balance of interests. For this reason, IEEE and the members of its societies and Standards Coordinating Committees are not able to provide an instant response to interpretation requests except in those cases where the matter has previously received formal consideration.

Comments on standards and requests for interpretations should be addressed to:

Secretary, IEEE-SA Standards Board
445 Hoes Lane
P.O. Box 1331
Piscataway, NJ 08855-1331
USA

Note: Attention is called to the possibility that implementation of this standard may require use of subject matter covered by patent rights. By publication of this standard, no position is taken with respect to the existence or validity of any patent rights in connection therewith. The IEEE shall not be responsible for identifying patents for which a license may be required by an IEEE standard or for conducting inquiries into the legal validity or scope of those patents that are brought to its attention.

Authorization to photocopy portions of any individual standard for internal or personal use is granted by the Institute of Electrical and Electronics Engineers, Inc., provided that the appropriate fee is paid to Copyright Clearance Center. To arrange for payment of licensing fee, please contact Copyright Clearance Center, Customer Service, 222 Rosewood Drive, Danvers, MA 01923 USA; (978) 750-8400. Permission to photocopy portions of any individual standard for educational classroom use can also be obtained through the Copyright Clearance Center.

Copyright The Institute of Electrical and Electronics Engineers, Inc.
Provided by IHS under license with IEEE
No reproduction or networking permitted without license from IHS
Not for Resale

Introduction

(This introduction is not part of IEEE Std 309-1999/ANSI N42.3-1999, IEEE Standard Test Procedures and Bases for Geiger-Mueller Counters.)

This standard is a revision of the 1970 version. It presents standard test procedures for Geiger-Mueller counters that are used for the detection of ionizing radiation. Also included is information on standard and typical bases for the counters. This revision has been approved by the Nuclear Instruments and Detectors Committee (NIDCom) of the IEEE Nuclear and Plasma Sciences Society and by the Accredited Standards Committee N42 on Nuclear Instrumentation of the American National Standards Institute (ANSI) for which the IEEE serves as the Secretariat.

These detectors, originally announced by Geiger and Müller in 1928, represented a major step forward in the detection and counting of individual radioactive events. The amplitude of the output signal is independent of the energy of the event. Therefore, when only the counting of radioactive events is required, without regard for the type of radiation or its energy, Geiger-Mueller counters are useful. The output signal is large enough to operate a scaler without additional amplification, the regulation requirements of the power supply can be far less than that required for the solid state detectors, and, unlike germanium detectors, no cryostat is required.

The principal attributes of the Geiger-Mueller counters are their low cost and simplicity, which accounts for their wide usage in many applications. Ionization chambers and the subsequently developed scintillation counter and semiconductor radiation detectors are capable of distinguishing between different types of radiation and their energies and can therefore be used for spectroscopy as well as for counting. The scintillation and semiconductor detectors, because they are solid rather than a gas, are highly efficient for the detection of gamma rays. The principal attributes of the scintillation counters are high efficiency and moderate energy resolution; whereas, the semiconductor detectors have outstanding energy resolution.

Ionization chambers, scintillation counters, and semiconductor detectors are dealt with in other standards publications.

An excellent description of Geiger-Mueller counters and their operation is provided in Chapter 7 of Glenn F. Knoll's book, Radiation Detection and Measurement. (See Knoll [B4] in Annex A.)

Participants

At the time this standard was completed, the working group of the Nuclear Instruments and Detectors Committee had the following membership:

David J. Allard, *Project leader*
Louis Costrell, *Project leader*
Carl R. Siebentritt, *Project leader*

David Barclay
Joseph G. Bellian
Peter Burgess
Edward Fairstein
M. R. Farukhi
James K. Hesch
Joseph C. McDonald
Donald E. Stilwell
Kenneth L. Swinth
Al N. Tschaeche
Michael Unterweger
Sanford Wagner

Copyright © 1999 IEEE. All rights reserved.

Copyright The Institute of Electrical and Electronics Engineers, Inc.
Provided by IHS under license with IEEE
No reproduction or networking permitted without license from IHS
Not for Resale

At the time this standard was completed, the Nuclear Instruments and Detectors Committee had the following membership:

Donald E. Stilwell, *Chair*
Michael Unterweger, *Vice Chair*
Louis Costrell, *Secretary*

David J. Allard
Joseph G. Bellian
William M. Bugg
Christopher Cox
Larry Darken
W. Kenneth Dawson
Edward Fairstein
Erik H. M. Heijne
Ronald M. Keyser
Frederick A. Kirsten
Glenn F. Knoll
G. Laurie Miller
Klaus D. Mueller
Dennis E. Persyk
Paul L. Phelps
Carl R. Siebentritt
Kenneth L. Swinth
Sanford Wagner
John Walter

When the IEEE-SA Standards Board approved this standard on 18 March 1999, it had the following membership:

Richard J. Holleman, *Chair* **Donald N. Heirman,** *Vice Chair*
Judith Gorman, *Secretary*

Satish K. Aggarwal
Clyde R. Camp
James T. Carlo
Gary R. Engmann
Harold E. Epstein
Jay Forster*
Thomas F. Garrity
Ruben D. Garzon
James H. Gurney
Jim D. Isaak
Lowell G. Johnson
Robert Kennelly
E. G. "Al" Kiener
Joseph L. Koepfinger*
Stephen R. Lambert
Jim Logothetis
Donald C. Loughry
L. Bruce McClung
Louis-François Pau
Ronald C. Petersen
Gerald H. Peterson
John B. Posey
Gary S. Robinson
Hans E. Weinrich
Donald W. Zipse

*Member Emeritus

Subsequently, the accredited American National Standards Committee N42 on Radiation Instrumentation also reviewed and approved this document. At the time of approval, it had the following membership:

Louis Costrell, *Chair* **Michael Unterweger,** *Vice Chair*

Sue Vogel, *Administrative Secretary*

Organization Represented	*Name of Representative*
American Conference of Governmental Industrial Hygienists	Jesse Lieberman
Applied Safety Technology	Edward J. Vallario*
Battelle Pacific Northwest Laboratories	Joseph C. McDonald
Bicron	Joseph G. Bellian
Chew, M. H.	Jack M. Selby
Eberline Instrument Company	James K. Hesch
EG&G ORTEC	Sanford Wagner
Gamma-Metrics	Ernesto A. Corte
Health Physics Society	George Campbell
	Joseph R. Stencel (*Alt.*)
Institute of Electrical and Electronics Engineers	Louis Costrell
	Julian Forster (*Alt.*)
	Anthony J. Spurgin (*Alt.*)
Lawrence Berkeley Laboratory	Edward J. Lampo
Lawrence Livermore National Laboratory	Gary Johnson
Lovelace RR Institute	Morgan Cox
Massachusetts Institute of Technology, Bates Linear Accelerator Center	Frank X. Masse

Copyright The Institute of Electrical and Electronics Engineers, Inc.
Provided by IHS under license with IEEE
No reproduction or networking permitted without license from IHS
Not for Resale
Copyright © 1999 IEEE. All rights reserved.

NASA/GSFC, U.S.	Donald E. Stilwell*
Nuclear Standards Unlimited	Al N. Tschaeche
Oak Ridge National Laboratory	Charles L. Britton
Swinth Associates	Kenneth L. Swinth
U.S. Army Center for EW/RSDA	Edward Groeber
U.S. Department of Commerce, National Institute of Standards and Technology	Louis Costrell Michael Unterweger (*Alt.*)
U.S. Department of Energy/PCSRD	Natesh Varma
U.S. Federal Emergency Management Agency	Carl R. Siebentritt
Members-at-Large	Paul L. Phelps Lee J. Wagner

*Deceased

Catherine K.N. Berger
IEEE Standards Project Editor

Copyright © 1999 IEEE. All rights reserved.

Copyright The Institute of Electrical and Electronics Engineers, Inc.
Provided by IHS under license with IEEE
No reproduction or networking permitted without license from IHS
Not for Resale

Contents

1. Overview 1

1.1 Scope 1
1.2 Purpose 1

2. References 1

3. Definitions, symbols, abbreviations, and acronyms 2

3.1 Definitions 2
3.2 Symbols, abbreviations, and acronyms 5

4. General 5

5. Test conditions 6

5.1 Radiation background 6
5.2 Ambient temperature 6
5.3 Radiation sources 6
5.4 Photon sources 6
5.5 Alpha- and beta-ray sources 7
5.6 Geiger-Mueller counter test circuits 7

6. Geiger-Mueller counter parameters 9

6.1 Background counting rate 9
6.2 Response to ionizing radiations 9
6.3 Geiger-Mueller threshold 10
6.4 Plateau characteristics 10
6.5 Life 10
6.6 Radial sensitivity of end-window counter 11
6.7 Longitudinal sensitivity of cylindrical counter 11
6.8 Temperature dependence 11
6.9 Hysteresis 11
6.10 Photosensitivity 12

7. Measurements of Geiger-Mueller characteristics 12

7.1 Current mode 12
7.2 Pulse-shape 12

8. Test equipment 14

8.1 Voltmeter 14
8.2 Ammeter 14
8.3 Oscilloscope 14
8.4 Counting system 15
8.5 Scaler 15
8.6 High-voltage supply 15
8.7 Capacitance bridge 15
8.8 Single-channel analyzer 15

Copyright The Institute of Electrical and Electronics Engineers, Inc.
Provided by IHS under license with IEEE
No reproduction or networking permitted without license from IHS

Copyright © 1999 IEEE. All rights reserved.

Not for Resale

9. Specifications of Geiger-Mueller counters 15

9.1 Geiger-Mueller counter construction 15
9.2 Standard connections 16
9.3 Anode resistors 16

Annex A (informative) Bibliography 17

Copyright © 1999 IEEE. All rights reserved.

Copyright The Institute of Electrical and Electronics Engineers, Inc.
Provided by IHS under license with IEEE
No reproduction or networking permitted without license from IHS
Not for Resale

IEEE Standard Test Procedures and Bases for Geiger-Mueller Counters

1. Overview

1.1 Scope

This standard applies to Geiger-Mueller (G-M) counters that are used for the detection and counting of individual particles.

1.2 Purpose

The purpose of this standard is

a) To establish test methods and test procedures so that they have the same meaning to both manufacturers and users.
b) To present additional information regarding G-M counters, such as information about the counters' bases.

2. References

This standard shall be used in conjunction with the following publications. When the following standards are superseded by an approved revision, the revision shall apply.

ANSI N42.12-1994, American National Standard—Calibration and Usage of Thallium-Activated Sodium Iodide Detector Systems for Assay of Radionuclides.[1]

ANSI N42.22-1995, American National Standard—Traceability of Radioactive Sources to the National Institute of Standards and Technology (NIST) and Associated Instrument Quality Control.

ANSI N42.23-1996, American National Standard—Measurement and Associated Instrumentation Quality Assurance for Radioassay Laboratories.

[1]ANSI N42 standards are available from the Institute of Electrical and Electronics Engineers, 445 Hoes Lane, P.O. Box 1331, Piscataway, NJ 08855-1331, USA (http://www.standards.ieee.org/).

Copyright © 1999 IEEE. All rights reserved.

Copyright The Institute of Electrical and Electronics Engineers, Inc.
Provided by IHS under license with IEEE
No reproduction or networking permitted without license from IHS
Not for Resale

IEC 60151-25 (1971-01), Measurements of the electrical properties of electronic tubes and valves. Part 25: Methods of measurement of Geiger-Mueller counter tubes.[2]

IEEE Std 100-1996, IEEE Standard Dictionary of Electrical and Electronics Terms.[3]

IEEE Std 301-1988 (Reaff 1993), IEEE Standard Test Procedures for Amplifiers and Preamplifiers Used with Detectors of Ionizing Radiation.

ISO 4037-1:1996, X and gamma reference radiation for calibrating dosimeters and dose rate meters and for determining their response as a function of photon energy—Part 1: Radiation characteristics and production methods.[4]

ISO 4037-2: 1997, X and gamma reference radiation for calibrating dosimeters and dose rate meters and for determining their response as a function of photon energy—Part 2: Dosimetry for radiation protection over the energy ranges from 8 keV to 1,3 MeV and 4 MeV to 9 MeV.

ISO 7503-1: 1988, Evaluation of surface contamination—Part 1: Beta-emitters (maximum beta energy greater than 0.15 MeV) and alpha-emitters.

U.S. National Bureau of Standards. NBS Special Publication 250-16, Calibration of X-Ray and Gamma-Ray Measuring Instruments.[5]

3. Definitions, symbols, abbreviations, and acronyms

Definitions, symbols, and abbreviations herein are as used in this standard and are applicable to G-M counters.

3.1 Definitions

3.1.1 avalanche: The cumulative process in which charged particles accelerated by an electric field produce additional charged particles through collision with neutral gas molecules or atoms. It is therefore a cascade multiplication of ions. (IEEE Std 100-1996)

3.1.2 background counts: Counts caused by ionizing radiation coming from sources other than that to be measured and by any electronic disturbance in the circuitry that is used to record the counts. (IEEE Std 100-1996)

3.1.3 calibrated source: Synonymous with radioactivity standard source.

3.1.4 check source: A radioactivity source, not necessarily calibrated, that is used to confirm the continuing satisfactory operation of an instrument. (IEEE Std 100-1996)

3.1.5 count: A single response of the counting system. *See also:* **tube count**. (IEEE Std 100-1996)

---

[2]IEC publications are available from the Sales Department of the International Electrotechnical Commission, Case Postale 131, 3, rue de Varembé, CH-1211, Genève 20, Switzerland/Suisse (http://www.iec.ch/). IEC publications are also available in the United States from the Sales Department, American National Standards Institute, 11 West 42nd Street, 13th Floor, New York, NY 10036, USA.

[3]IEEE publications are available from the Institute of Electrical and Electronics Engineers, 445 Hoes Lane, P.O. Box 1331, Piscataway, NJ 08855-1331, USA (http://www.standards.ieee.org/).

[4]ISO publications are available from the ISO Central Secretariat, Case Postale 56, 1 rue de Varembé, CH-1211, Genève 20, Switzerland/Suisse (http://www.iso.ch/). ISO publications are also available in the United States from the Sales Department, American National Standards Institute, 11 West 42nd Street, 13th Floor, New York, NY 10036, USA (http://www.ansi.org/).

[5]NBS publications are available from the Superintendent of Documents, U.S. Government Printing Office, P.O. Box 37082, Washington, DC 20013-7082, USA.

Copyright © 1999 IEEE. All rights reserved.

Copyright The Institute of Electrical and Electronics Engineers, Inc.
Provided by IHS under license with IEEE
No reproduction or networking permitted without license from IHS

Not for Resale

3.1.6 counter tube: (1) (externally quenched): A radiation-counter tube that requires the use of an external quenching circuit to inhibit reignition. **(2) (gas-filled):** A gas tube used for detection of radiation by means of gas ionization. **(3) (gas-flow):** A radiation-counter tube in which an appropriate gas-fill concentration is maintained by a flow of gas through the tube. **(4) (Geiger-Mueller):** A radiation-counter tube operated in the Geiger-Mueller region. **(5) (self-quenched):** A radiation-counter tube in which reignition of the discharge is inhibited by internal processes. (IEEE Std 100-1996)

3.1.7 counting efficiency: The ratio of the number of observed counts to the total number of ionizing particles impinging upon the counter surface when the counting rate is so low that dead-time correction is unnecessary.

3.1.8 counting-rate-versus-voltage characteristic: The counting rate as a function of applied voltage for a given constant average intensity of radiation. (IEEE Std 100-1996)

3.1.9 dead time: The time interval after the start of an essentially full-amplitude pulse during which a radiation detector is insensitive to further ionizing events. *See also:* **recovery time**. (See Figure 4)

3.1.10 differentiator: A high-pass network, usually comprising a series capacitor and a shunt resistor, for the purpose of reducing the duration of a signal.

3.1.11 efficiency: *See:* **counting efficiency**.

3.1.12 gas amplification: *See:* **gas multiplication factor**.

3.1.13 gas multiplication factor: The ratio of the charge collected from the sensitive volume to the charge produced in that volume by the initial ionizing event. (IEEE Std 100-1996)

3.1.14 Geiger-Mueller counter tube: A radiation-counter tube designed to operate in the Geiger-Mueller region. (IEEE Std 100-1996) (See 3.17.)

3.1.15 Geiger-Mueller region: The range of applied voltage in which the charge collected per isolated count is independent of the charge liberated by the initial ionizing event. (IEEE Std 100-1996)

3.1.16 Geiger-Mueller threshold: The lowest applied voltage at which the charge collected per isolated tube count is substantially independent of the nature of the initial ionizing event. (IEEE Std 100-1996) (See Figure 1.)

3.1.17 half-amplitude recovery time: The time interval from the start of a full-amplitude pulse to the instant a succeeding pulse can attain an amplitude of 50% of the maximum amplitude of a full-amplitude pulse. (IEEE Std 100-1996) (See Figure 4.)

3.1.18 initial ionizing event: An ionizing radiation interaction event that initiates a tube count.

3.1.19 ionizing radiation: Particles or photons of sufficient energy to produce ionization in interactions with matter. [Note that here the usual meaning of radiation (based on IEEE Std 100-1996) has been extended to include moving nuclear particles, charged or uncharged.]

3.1.20 multiple tube counts: Spurious counts induced by previous tube counts. (IEEE Std 100-1996)

3.1.21 plateau: The portion of the counting-rate-versus-voltage characteristic in which the counting rate is substantially independent of the applied voltage. (IEEE Std 100-1996) (See Figure 1.)

3.1.22 plateau length: The range of applied voltage over which the plateau of a radiation-counter tube extends. (IEEE Std 100-1996) (See Figure 1.)

Copyright © 1999 IEEE. All rights reserved.

Copyright The Institute of Electrical and Electronics Engineers, Inc.
Provided by IHS under license with IEEE
No reproduction or networking permitted without license from IHS Not for Resale

3.1.23 plateau slope: The slope of the plateau of a gas-filled counter tube expressed as the percentage change in counting rate per 100 V change in applied voltage. Alternatively, the slope can be expressed in percent counting rate per volt change in applied voltage. (See Figure 1.)

3.1.24 pulse-height discriminator: A circuit that responds to pulses above a designated amplitude and generates a pulse to feed into a counting circuit but that does not respond to lower amplitude pulses.

3.1.25 quenching: The process of terminating a discharge in a Geiger-Mueller radiation-counter tube by inhibiting a reignition. *Note:* This may be effected by (a) self-quenching (internal quenching) by use of an appropriate gas or vapor filling, or (b) externally (external quenching) by momentary reduction of the applied potential difference.

3.1.26 radial sensitivity: The counting rate of a Geiger-Mueller counter as a function of radial position across the window of an end-window or pancake Geiger-Mueller counter. (See Figure 3.)

3.1.27 radiation: *See:* **ionizing radiation**.

3.1.28 radioactivity standard source: A radioactivity source that has been certified as to absolute radioactivity either by (a) the laboratory recognized as the National Standardizing Laboratory of the country for radioactivity measurements, NSLR, (NIST in the case of the U.S.) or (b) by a supplier who participates in measurement assurance activities with the National Standardizing Laboratory when such standards are available. In such measurement assurance activities, the radioactivity calibration value of the supplier shall agree with the National Standardizing Laboratory value within the overall uncertainty stated by the supplier in its verification of the same batch of sources or in its certification of similar sources. *Synonym:* **calibrated source**.

3.1.29 recovery time: The minimum time from the start of a counted pulse to the instant a succeeding pulse can attain a specified percentage of the maximum amplitude of the counted pulse. (IEEE Std 100-1996) *See also:* **half-amplitude recovery time**.

3.1.30 reignition: A process by which multiple counts are generated within a counter tube by atoms or molecules excited or ionized in the discharge accompanying a tube count. (IEEE Std 100-1996)

3.1.31 resolving time: The time from the start of a counted pulse to the instant a succeeding pulse can assume the minimum strength to be detected by the counting circuit. *Note:* This quantity pertains to the combination of tube and recording circuit. (IEEE Std 100-1996) *See also:* **half-amplitude recovery time**.

3.1.32 rise time: The interval between the instants at which the instantaneous value first reaches specified lower and upper limits, namely 10 and 90% of the peak pulse value. (IEEE Std 100-1996) (See Figure 4.)

3.1.33 sensitive volume: That portion of the radiation counter gas volume having sufficient potential gradient to operate in the Geiger-Mueller region.

3.1.34 source, calibrated: *See:* **calibrated source**.

3.1.35 source, check: *See:* **check source**.

3.1.36 source, radioactivity standard: *See:* **radioactivity standard source**.

3.1.37 spurious count: A count caused by any event other than the passage into or through the counter tube of the ionizing radiation to which it is sensitive. (IEEE Std 100-1996)

3.1.38 tube count: A terminated discharge produced by an ionizing event in a radiation-counter tube. (IEEE Std 100-1996)

Copyright The Institute of Electrical and Electronics Engineers, Inc.
Provided by IHS under license with IEEE
No reproduction or networking permitted without license from IHS

Copyright © 1999 IEEE. All rights reserved.

Not for Resale

3.1.39 U.S. National Institute of Standards and Technology (NIST): Formerly the National Bureau of Standards (NBS), NIST is the U.S. federal agency with legally mandated authority to maintain U.S. national physical standards for the activity of radionuclides.

3.2 Symbols, abbreviations, and acronyms

cpm	counts per minute
C_{bp}	bypass capacitor
C_c	coupling capacitance
C_t	detector capacitance
DVM	digital voltmeter
G-M	Geiger-Mueller
HV	high voltage
NBS	U.S. National Bureau of Standards (see NIST)
NIST	U.S. National Institute of Standards and Technology (formerly NBS)
NSLR	a country's National Standardizing laboratory for radioactivity measurements
R_L	detector anode load resistor
S	plateau slope

4. General

In a G-M counter, the electrons produced by the initial ionizing event gain enough energy in their travel to the anode wire to produce secondary ionization (avalanches). The avalanches produce photons, some of which will initiate additional avalanches. At some critical voltage (namely, the transition voltage) avalanche generation becomes self-sustaining, which can paralyze the counter. To prevent this, the avalanche build-up needs to be quenched. Depending on the filling mixture and operating parameters, tubes can be self or externally quenched. External quenching can be obtained by circuits that momentarily reduce the operating voltage, but the simplest way is to make the anode load resistor sufficiently large, –2 to 10 MΩ. The optimum resistor value is a compromise between the effectiveness of quenching and the recovery time.

There are four general kinds of G-M counters in common use, identified by their quenching characteristics and filling gases. They are as follows:

a) Self-quenched organic
b) Resistor-quenched organic
c) Self-quenched halogen
d) Resistor-quenched halogen

The resistor-quenched halogen tube is self-quenching from just above the G-M threshold to a transition voltage, above which the quenching depends on having in place a large anode resistor that is ≥100 MΩ.

The performance of a G-M tube is strongly dependent on its operating parameters. The manufacturer shall furnish the user with all of the information necessary to duplicate the published performance figures, including the type of circuitry connected to the counter output and the value of the anode resistor as well as the test conditions. (For the resistor-quenched counters it is easier to duplicate the manufacturer's test results if both employ test circuits having a current- or charge-sensitive input. This minimizes the effects of differences in cable and input capacitances.)

The counter characteristic is the output counting rate as a function of applied voltage as shown in Figure 1.

Copyright © 1999 IEEE. All rights reserved.
Copyright The Institute of Electrical and Electronics Engineers, Inc.
Provided by IHS under license with IEEE
No reproduction or networking permitted without license from IHS Not for Resale

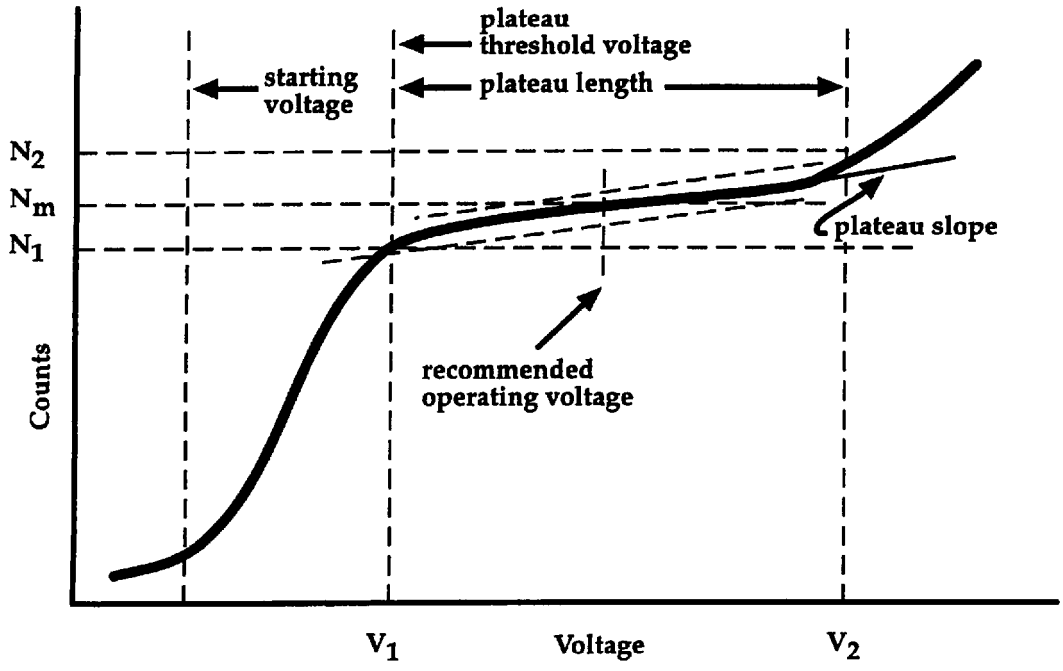

Figure 1—Geiger-Mueller counter plateau

5. Test conditions

5.1 Radiation background

During the tests, the test area shall be free of all radiation sources other than the minimal background and the source being used for the test process.

5.2 Ambient temperature

Unless otherwise stated, all characteristics shall be at an ambient temperature of 22°C ± 2°C.

5.3 Radiation sources

Some measurements on G-M counters require the use of a calibrated source; whereas for other measurements, such as plateau determinations, calibrated sources are not needed. For determination of counting rate as a function of dose rate or fluence rate (as applicable), a calibrated source shall be used and the accuracy of the calibration shall be stated. In all cases, the sources used shall be identified.

5.4 Photon sources

^{137}Cs and/or ^{60}Co gamma sources are recommended for tests of counting rate vs. dose rate or fluence rate. Other sources may be used for additional data at alternate photon energies (ISO 4037[6]) but, in all cases, the

[6]Information on references can be found in Clause 2.

Copyright The Institute of Electrical and Electronics Engineers, Inc.
Provided by IHS under license with IEEE
No reproduction or networking permitted without license from IHS

Copyright © 1999 IEEE. All rights reserved.

Not for Resale

specific isotope(s) shall be identified. Similarly, X-ray machines may be used if beam quality parameters (e.g., kilovoltage, filtration, half-value layer) are specified.

5.5 Alpha- and beta-ray sources

A collimated alpha source (ISO 7503-1: 1988) may be used for probing the thin, (0.3 mg/cm^2) typically mica window (e.g., "pancake" or end-window type) of G-M counters to determine their radial sensitivity.

A collimated beta source, such as ^{90}Sr+^{90}Y, may be used for radial sensitivity of cylindrical, thin-wall beta-gamma counters. (See also ISO 4037.)

A small source of natural or depleted uranium covered with approximately 20 mg/cm^2 of aluminum is useful for checking counters that have thin mica windows or thin windows of another material. This source is especially suitable for comparing the operating characteristics (e.g., plateau length and slope) of thin window counters as no correction needs to be made for source absorption due to variations in window thickness.

When absolute G-M counter detection efficiency is measured, calibrated alpha and beta sources shall be used (e.g., ^{230}Th and ^{99}Tc). Sources shall have single principal emitters, with any secondary emitters producing fewer than 3% of the measured total counts. (See ISO 7503-1: 1988.)

Thin-walled and end-window G-M counters are often used for contamination monitoring. Two measurements are frequently performed. The first measurement is the response to point sources of radiation, i.e., the detector is positioned at a defined distance (typically 3 mm) from a reference source of alpha or beta radiation that has a diameter or maximum dimension that is small compared to the diameter of the detector. The response is expressed as either

— The "*d*-mm efficiency" (where *d* is the source to detector distance), i.e., the probability of a particle that is emitted from the source being detected, or
— The ratio of the counting rate per unit time per Bq.

The second measurement is the response to large area sources, i.e., sources that are significantly larger than the maximum dimension of the detector window. In this case, the response of the detector is expressed as either

— The counting rate per unit emission per cm^2 from the source at the defined source to detector separation, or
— The counting rate per unit time per Bq. Suitable nuclides are the beta emitters ^{90}Sr+^{90}Y and ^{14}C and the alpha nuclide ^{238}Pu. (See ISO 7503-1: 1988.)

5.6 Geiger-Mueller counter test circuits

The output of the G-M tube is coupled to a signal sensor. In most cases this will be a voltage-sensitive preamplifier or a univibrator. Either the anode or the cathode may be used for signal output, but the anode has the advantage of lower stray capacitance to surroundings. Also, either terminal may be at high voltage (HV). If the output terminal is at HV and the preamplifier is at ground potential, a coupling capacitor, C_c, shall be used.

Two examples are shown in Figure 2.

Copyright © 1999 IEEE. All rights reserved.

Copyright The Institute of Electrical and Electronics Engineers, Inc.
Provided by IHS under license with IEEE
No reproduction or networking permitted without license from IHS Not for Resale

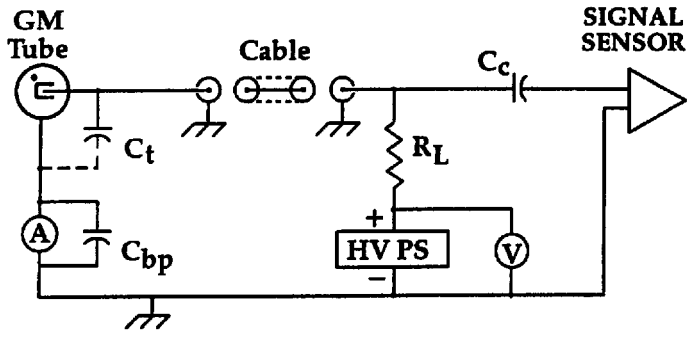

(a) Cathode at Ground Potential

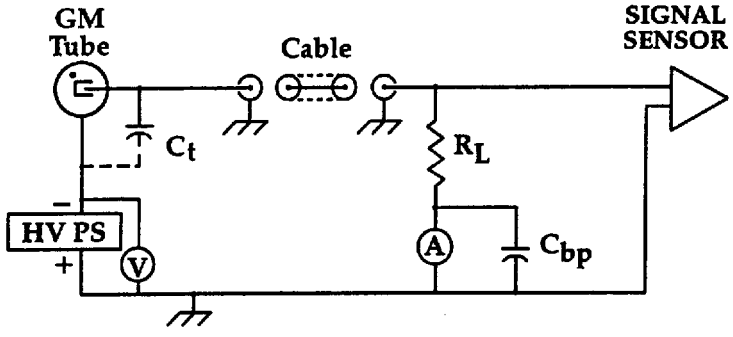

(b) Anode at Ground Potential

Figure 2—Geiger-Mueller counter test circuits

In part (a) of Figure 2, the anode is at positive HV and is coupled to the power supply through the load resistor, R_L (2 to 10 MΩ as recommended by the manufacturer). As shown, the load resistor is on the sensor side of the connecting cable. It is also possible to incorporate R_L with the G-M tube, but this requires an external terminal for the package—one for the signal and one for the power supply. Also in part (a) of Figure 2, an ammeter is shown connected in series with the nominally grounded cathode. A bypass capacitor, C_{bp}, shall be mounted at the G-M tube to provide a short path to ground for the signal current.

In part (b) of Figure 2, the anode is at dc ground and the cathode is at negative HV. This arrangement allows the preamplifier to be dc coupled to the anode, eliminating the need for a coupling capacitor. Note that the ammeter and the power have been interchanged with respect to their locations in part (a) of Figure 2.

In both configurations, C_t represents the capacitance across the G-M tube (usually the stray capacitance).

To permit duplication of test conditions for comparing test measurements, the following information shall be provided:

a) The values of the components and their layout. These shall include all resistors and capacitors connected to the G-M tube, either directly or through a connecting wire. If a wire is used, its length shall be given.
b) A statement as to which components are integral to the package and which are external to it.
c) Input resistance and capacitance of the sensor used for the tests.
d) Cable length and type (RG number) used in the tests, and whether the cable is part of the assembly or is external to it.

Copyright The Institute of Electrical and Electronics Engineers, Inc.
Provided by IHS under license with IEEE
No reproduction or networking permitted without license from IHS

Copyright © 1999 IEEE. All rights reserved.

Not for Resale

e) Information about the electronic instrumentation connected to the G-M counter output. The following items should be included: gain rise time, dynamic range, test input capacitance and its terminating resistance, types of connectors, power requirements, and circuit diagram. If it is a commercially available unit, include the manufacturer's model number.

f) Operating voltage. The direct-current operating voltage shall be stated with the specification of counter characteristics. The term *operating voltage,* as used here, is the supply voltage, and thus is the voltage across the load-resistor/counter combination.

6. Geiger-Mueller counter parameters

Measurements shall be based on counts of at least 10 000 total accumulated counts and shall be corrected for background. The accumulated counts in the background test shall not be less than the square root of the total counts accumulated with the sample in place.

6.1 Background counting rate

The background measurement shall be made with the counter totally enclosed in a nuclear radiation shield. This shield shall consist of an outer layer of lead at least 50 mm thick and an inner liner of at least 3 mm of aluminum. The maximum background counting rate within the shield shall be specified. Typical "unshielded" background may also be specified for the test location. (See ISO 4037.)

6.2 Response to ionizing radiations

The counter response to ionizing radiation will depend on the cathode and/or window design, the type and energy of the ionizing radiation, and geometric factors that are discussed in this subclause. The sources will depend upon the applications for which the counter is designed (e.g., radiation protection surveys, industrial gauging, etc.). The radioisotopes used for evaluation shall be stated. For counters designed to detect the intermediate range of gamma-ray energies, one of the sources shall be ^{137}Cs or ^{60}Co.

For a stated source-detector geometry and each value of ionizing radiation dose or photon fluence, the current and/or counting rate shall be recorded or plotted at a stated operating voltage. This shall be done at a counting rate for which the product of the dead time (see 7.2.2) and counting rate is less than 0.05.

Gamma-ray measurements should be performed using facilities that conform to the recommendations in ISO 4037 (i.e., facilities that generate a collimated beam in a low scatter environment). Alternatively and equivalently, a convenient test arrangement that may be used for gamma-ray measurements is one that employs an unshielded and collimated source placed at a fixed distance from the counter; the distance shall be at least five times greater than the largest dimension of the sensitive area of the counter. The counter should be mounted on a rigid jig made of low Z material for test and calibration and should be isolated (>5.0 m) from adjoining materials (e.g., walls, shield blocks, electronics, etc.) to minimize the effect of scatter on measurements. Counter orientation with respect to the source-detector axis shall be stated. Gamma-ray measurements on a G-M counter should be performed over a range of dose rates (μGy/h) to observe any non-linearity in response at higher dose rates [e.g., cpm/(μGy h^{-1})].

G-M counters are often calibrated by end-users for response (e.g., cpm) to a known photon dose rate in air (μGy/h) with a ^{137}Cs gamma source (i.e., 662 keV). However, since measurements at other photon energies are most likely to be made, it is important to know the photon energy response of both bare and compensated type G-M tubes. Depending on the construction of the tube and the intended use, it may be useful to know the energy response characteristics ranging from 10 keV to several MeV. All data for relative photon energy response measurements shall be normalized to ^{137}Cs. All data or plotted curves shall be stated as a relative energy response ratio, i.e., the product of the observed alternate energy response in, for example,

Copyright © 1999 IEEE. All rights reserved.

Copyright The Institute of Electrical and Electronics Engineers, Inc.
Provided by IHS under license with IEEE
No reproduction or networking permitted without license from IHS Not for Resale

cpm/(μGy h^{-1}), divided by the ^{137}Cs response with the same units. Similarly, polar response at a stated energy should be normalized to a recommended calibration geometry, with the G-M counter then rotated 360° in an incident-parallel photon beam to obtain the relative response. Calibrated sources or ion chambers shall be used in these tests.

For alpha-, beta-, and X-ray measurements, any geometric factors that can affect the evaluation of the counter response by more than 3% shall be described. These factors include

a) Angle of incidence of the radiation
b) Source backing/mounting material
c) Shielding and collimation
d) Air absorption
e) Absorption due to radiation filters

6.3 Geiger-Mueller threshold

The G-M counter shall be connected to an oscilloscope and documented test circuit, and shall be placed in a radiation field such that the dead-time counting-rate product is 0.05 or less at its rated operating voltage. The voltage is gradually raised from well below the G-M threshold until pulses appear on the oscilloscope. The G-M threshold is that voltage at which nearly all pulses are within 95% of their average amplitude. See Figure 1.

6.4 Plateau characteristics

With the counter in a radiation field, a curve shall be plotted of counting rate vs. counter-tube voltage as shown in Figure 1. The circuit parameters and the input sensitivity shall be stated.

6.4.1 Plateau length

The operating plateau is that portion of the curve that is substantially flat or uniform in slope. The plateau length from V_1 to V_2 of Figure 1 is expressed in volts and is the region over which the slope is calculated. It is quantitatively determined by drawing two lines parallel to the plateau, but separated from the plateau by ±5% of the counting rate at the center of the region (N_m). The ends of the plateau are defined by the intersections of the lines with the curve (V_1 and V_2 in Figure 1).

6.4.2 Plateau slope

The plateau slope S in units of *percent change per 100 V* shall be calculated from the following formula where V_1 and V_2 are as in Figure 1:

$$S = 2 \times 10^4 (N_2 - N_1)/ [(N_1 + N_2) (V_2 - V_1)]$$

6.5 Life

The life of a G-M counter is defined in terms of the total accumulated counts before specified parameters change by a specified amount. The counter shall be operated at its specified operating voltage in a radiation field. The circuit and test conditions (i.e., temperature) used shall be documented (see 5.4). To conserve test time, it is recommended that the counting rate be high, but not more than 1/10 of the reciprocal of the dead time (see 7.2.2). When specifying tube life, the extent of change of the following specified parameters shall be stated:

a) G-M threshold

Copyright The Institute of Electrical and Electronics Engineers, Inc.
Provided by IHS under license with IEEE
No reproduction or networking permitted without license from IHS

Copyright © 1999 IEEE. All rights reserved.

Not for Resale

b) Plateau length
c) Plateau slope
d) Background counting rate

6.6 Radial sensitivity of end-window counter

A collimated alpha or beta source may be used to determine the sensitivity along a diameter of an end-window counter (typically a mica-window counter). The better the collimation, the more accurate is the measurement. If a beta source is used, the source holder shall be such that radiation cannot escape from its sides. The diameter of the collimator hole shall be not larger than 1/5 of its length nor 1/10 of the diameter of the counter window. The source shall be placed as close to the window as practical and then moved across the window along a diameter, then rotated 90° and the measurements repeated. (See Figure 3.) Counting rate shall be plotted as a function of radial position. The source and collimator geometry shall be stated.

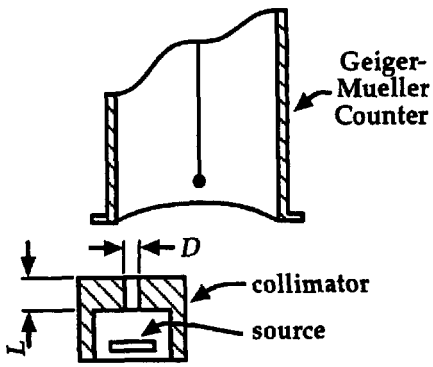

Figure 3—Test setup for radial sensitivity determination

6.7 Longitudinal sensitivity of cylindrical counter

In cylindrical counters, the electrical field is distorted near each end. The resulting longitudinal dependence of sensitivity can be investigated in a manner similar to that described in 6.6. Counting rate shall be plotted as a function of longitudinal position. The source and collimator geometry shall be stated.

6.8 Temperature dependence

Varying the ambient temperature from the normal room temperature will affect the various parameters of a G-M counter. The amount change will depend on the type of counter and the temperature difference.

The manufacturer shall specify the operating temperature limits and the change of each affected parameter. If a counter parameter change is approximately linear over the temperature range specified, the change may be expressed as a temperature coefficient. However, if that is not the case, a plot of the change vs. temperature shall be provided.

6.9 Hysteresis

Some G-M counters exhibit a voltage-hysteresis effect. Usually this is encountered when the HV is initially applied and when determining a counting-rate-versus-voltage characteristic (see 6.4). There can be a difference between the plateau obtained with an increasing-voltage traverse and that obtained with a decreasing-voltage traverse. Hysteresis may also appear if a plateau is traversed and the voltage is then set at the operating voltage. This effect is attributed to the charging of insulating surfaces in the counter. Large area G-M

Copyright © 1999 IEEE. All rights reserved.

Copyright The Institute of Electrical and Electronics Engineers, Inc.
Provided by IHS under license with IEEE
No reproduction or networking permitted without license from IHS Not for Resale

counters with windows made of a dielectric such as mica or thin plastic film are especially vulnerable to hysteresis. Repeated counting-rate measurements of a source at a fixed-tube voltage should be made to determine if the counter has stabilized. To test for hysteresis, the plateau shall be traversed in an ascending and then in a descending direction with a total elapsed time of less than one hour (much shorter than the charge-leakage time constants of the insulating surfaces). The ascending and descending plateau curves shall be shown. Since hysteresis may reduce the G-M counter's sensitive volume, counter efficiency for alpha and beta radiation shall be determined once repetitive counts differ by no more than the expected statistical variation at that counting rate.

6.10 Photosensitivity

Photosensitivity is indicated by a change in the background counting rate of the counter to light (the windows are usually made opaque). Halogen-quenched counters normally do not exhibit such sensitivity. Photosensitivity shall be tested by measuring the background counting rate, first with the counter operating in the dark and then with the counter exposed to a stated illumination.

7. Measurements of Geiger-Mueller characteristics

The counter is connected in a documented circuit. (See Figure 2.) (Note that a circuit without a coupling capacitor between the G-M counter and the electronic input may be useful.) The manufacturer shall specify the value of the anode resistor to be used, and all tests shall be made with an anode resistor of that value. The characteristics to be measured are listed in this clause. These characteristics are dependent on circuitry, counter-tube voltage, and counting rate.

7.1 Current mode

G-M counters can be operated in the current mode using a microammeter. This standard does not address that mode of operation.

7.2 Pulse-shape

Figure 4 illustrates the defined terms that follow in 7.2.1, 7.2.2, 7.2.3, and 7.2.4. Part (a) of Figure 4 is a drawing made from an oscilloscope picture of the voltage pulse from a typical G-M counter. Since, in general, the rise time is much shorter than the dead time, it is shown on a different time scale in part (b) of Figure 4.

7.2.1 Rise time

The rise time of a G-M counter pulse is defined as the time interval between 10% and 90% of peak amplitude. The actual circuit used (with component values), voltage on the G-M counter, and the circuit rise time shall be recorded.

7.2.2 Dead-time measurement using oscilloscope observation

The dead time is defined as the time interval after the start of an essentially full-amplitude pulse during which a radiation detector is insensitive to further ionizing events [see part (a) of Figure 4].

Circuit parameters, counter-tube voltage, and counting rate shall be recorded along with the dead time. A curve of dead time vs. voltage is very useful A differentiator shall be used in the signal path. The time constant of the network shall be such that the pulse decays to less than 5% of its maximum value before the succeeding pulse appears as observed on the oscilloscope screen (see also 7.2.4). It is usual to use a radioactive

Copyright The Institute of Electrical and Electronics Engineers, Inc.
Provided by IHS under license with IEEE
No reproduction or networking permitted without license from IHS

Copyright © 1999 IEEE. All rights reserved.

Not for Resale

check source for this purpose, but an alternative is a double-pulse X-ray source with adjustable spacing between the pulses of a pair [see IEC 60151-25 (1971-01)].

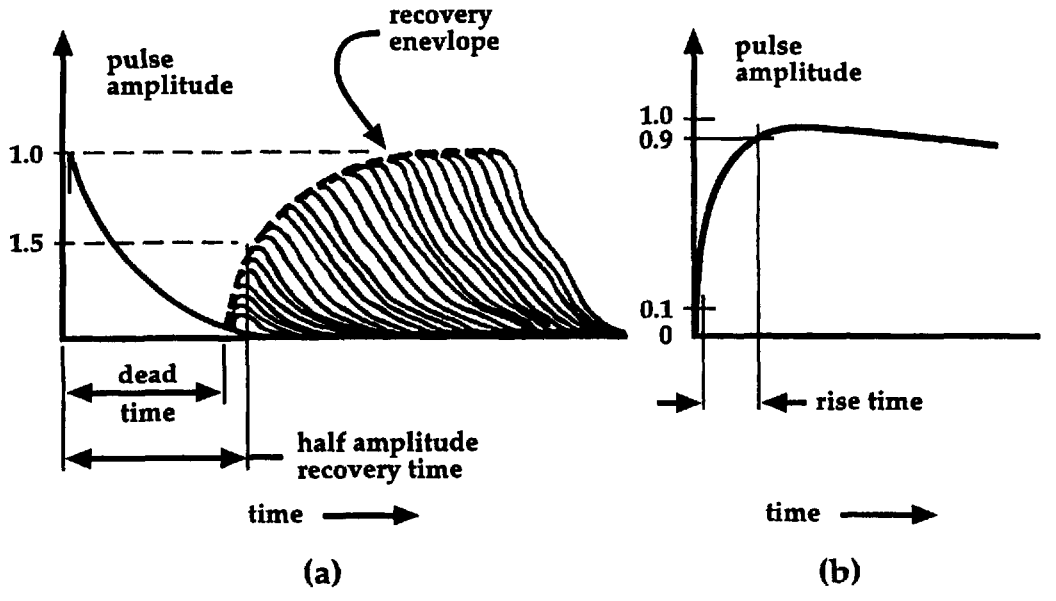

In (a) the pulse rise is not visible; in (b) it is because of a faster sweep speed.

Figure 4—Oscilloscope display of typical dead time and recovery envelope (voltage pulse)

7.2.3 Half-amplitude recovery time

The half-amplitude recovery time (see Figure 4) is defined as the time interval from the start of a full-ampltude pulse to the instant a succeeding pulse can attain an amplitude of 50% of the maximum amplitude of a full-amplitude pulse. Circuit parameters, counter voltage, and counting rate shall be stated along with the half-amplitude recovery time. (See also 7.2.4.)

7.2.4 Two-source method for dead-time and recovery-time measurements

An alternative method for determining dead time or recovery time is the "two-source method" (see ANSI N42.12-1994 and Knoll [B4][7]). In this method, three counting rates are measured using two sources from the same radioisotope—the first from Source 1, the second from Source 2, and the third from Sources 1 and 2 simultaneously. Additionally, the background counting rate is determined with no sources present.

The counting system discriminator is set at 10% of the full-pulse amplitude for the dead-time measurement and at 50% for the 50% recovery-time measurement. From the measurements, the respective counting rates N_1, N_2, N_{12} and N_b shall be obtained and the dead time and recovery time determined using the following equations:

$$t_d \text{ or } t_{50} = x[1 - (1 - z)^{1/2}]/y$$

where: $x = N_1N_2 - N_bN_{12}$

[7]The numbers in brackets correspond to those of the bibliography in Annex A.

Copyright © 1999 IEEE. All rights reserved.

Copyright The Institute of Electrical and Electronics Engineers, Inc.
Provided by IHS under license with IEEE
No reproduction or networking permitted without license from IHS Not for Resale

$$y = N_1N_2(N_{12} + N_bN_{12}) - N_bN_{12}(N_1 + N_2)$$

$$z = [y(N_1 + N_2 - N_{12} - N_b)]/x^2$$

When making these measurements, it is important not to disturb Source 1 when introducing Source 2 and, similarly, when removing Source 1, not to disturb Source 2. For multichannel analyzer (MCA) systems, the "live-time" feature is designed to compensate for counting time lost during pulse processing, and further correction for dead-time and recovery-time losses is usually not required. (At the counting rates achieved with G-M counters, any loss due to modern MCAs is none-the-less essentially insignificant.)

When either Source 1 or Source 2 is not in use, the source that is not in use shall be replaced by a blank so that the scattering geometry is unchanged.

In the two-source method, the dead time is computed from the difference between two large quantities. The statistical fluctuations of each of the counts add quadratically when computing the difference. Therefore, very long counting times may be necessary for each of the counts if the error in the difference count is to be kept to a reasonable level.

8. Test equipment

The equipment listed in this clause is typically used in G-M counter tests. It is neither all-inclusive nor restrictive and does not preclude the use of alternative test instrumentation.

8.1 Voltmeter

To separately measure the voltage across the counter tube and that across the anode resistor, a high impedance meter, such as a very high input-resistance digital voltmeter (DVM), is required. However, in general, the voltage of interest, such as the operating voltage as defined in this standard (see 5.6), is the voltage across the anode-resistor/counter combination, (i.e., the voltage provided by the power supply) and thus any accurate voltmeter with reasonable input resistance will suffice.

8.2 Ammeter

To measure the current through the G-M counter tube, a microammeter shall be placed in series with it, preferably on the grounded side. Alternatively, a suitably isolated meter may be placed in series with the connection to the high-voltage supply. In either case, a capacitor should be connected across the meter to provide a low-impedance path for the signal. A battery-operated DVM can be used in ammeter mode, if available, or by measuring the voltage drop across a known resistance, with the drop not exceeding one volt. The make and model of the meter shall be stated.

8.3 Oscilloscope

The oscilloscope that is used to view waveforms shall have a rise time of 0.1 μs or less. Where feasible, dc coupling shall be used. The make and model of the oscilloscope and its loading on the circuit shall be stated if such loading affects the accuracy of the measurements.

Copyright The Institute of Electrical and Electronics Engineers, Inc.
Provided by IHS under license with IEEE
No reproduction or networking permitted without license from IHS

Copyright © 1999 IEEE. All rights reserved.

Not for Resale

8.4 Counting system

The pulse pair resolution of the counting system shall be less than the dead time of the G-M counter that is being tested. The polarity of the input shall be considered as well as the sensitivity, and the system shall be capable of a wide dynamic range of input pulse amplitudes to obtain satisfactory plateau data. The system shall be capable of clearly resolving the individual input pulses and shall have a discriminating range sufficient to permit determination of the dead time and the 50% resolving time. The input impedance shall be defined and shall not be less than the load resistance, R_L.

8.5 Scaler

A digital scaler with a pulse resolving time less than that of the G-M tube and with a digital display that has a capacity of at least 100 000 counts shall be used for measurement of the G-M tube characteristics. It is convenient for the scaler to have selectable preset-time or total-count features.

8.6 High-voltage supply

A high-voltage supply that will cover the voltage range of interest for the counter tested is necessary. In some cases, the supply may be an integral part of the scaler or counting-rate meter. The supply has to be capable of delivering the maximum tube current demanded and do so without overloading or loss of regulation. The regulation against line and load variations should be 1% or better. The ripple should be less than 100 mV. The output resistance shall not exceed 2% of that of the anode resistor.

8.7 Capacitance bridge

A general-purpose laboratory capacitance bridge can be used to measure the capacitance of G-M tubes. Most G-M tubes have a capacitance of 10 pF or less and the parasitic capacitance to ground of other components connected to the output terminal can be expected to add 5 to 15 pF (including connectors). The signal cable will add to the parasitic capacitance to the extent of about 50 pF/m for a cable with a characteristic impedance of 100 Ω, increasing to about 100 pF/m for a 50-ohm cable.

8.8 Single-channel analyzer

A single-channel analyzer shall be capable of clearly resolving the individual input pulses and shall have a discriminating range sufficient to permit determination of the dead time and the 50% resolving time.

9. Specifications of Geiger-Mueller counters

9.1 Geiger-Mueller counter construction

The materials (cathode, cathode plating thickness, liner, anode, window, gas-filling, etc.) of which a G-M counter is constructed shall be accurately specified. Accurate mechanical drawings shall be made available by the manufacturer. The thickness of the window or wall (as applicable), together with the window or wall material, shall be stated by the manufacturer. (Window thickness is typically given in mg/cm^2.) (See 6.6 and 6.7.)

Copyright © 1999 IEEE. All rights reserved.

Copyright The Institute of Electrical and Electronics Engineers, Inc.
Provided by IHS under license with IEEE
No reproduction or networking permitted without license from IHS Not for Resale

9.2 Standard connections

To facilitate interchangeability of G-M counter tubes and probes, standard bases and electrode connections shall be as follows:

9.2.1 Multipin connectors

a) 3-pin "Pee-Wee" base (JETEC-A3-1)[8] with pin connections as follows:

Pin number	Connection
1	Cathode
2	Anode
3	No connection

b) 4-pin "Medium" base (JETEC-A3-1)[9] with pin connections as follows:

Pin number	Connection
1	No connection
2	Anode
3	No connection
4	Cathode

9.2.2 Single-pin connectors

Single-pin connectors (e.g., BNC, C, MHV, SHV, and others) on G-M counter tubes or probes shall be as specified by the manufacturer or purchaser.

9.3 Anode resistors

Anode resistors shall be specified by the manufacturer.

[8]JETEC-A3-1 is included in Electron Industries Association Standard EIA 209A, "Standards for Electron Tubes." The Joint Electron Tube Engineering Council (JETEC) has been superseded by the Joint Electron Devices Engineering Council (JEDEC).

[9]See Footnote 8.

Copyright The Institute of Electrical and Electronics Engineers, Inc.
Provided by IHS under license with IEEE
No reproduction or networking permitted without license from IHS

Copyright © 1999 IEEE. All rights reserved.

Not for Resale

Annex A

(informative)

Bibliography

A.1 Publications 1960 and later

[B1] Centronic Databook, *Geiger-Mueller Tubes,* Centronic Ltd., New Addingdon, Croydon, Surrey, England, Issue No. 1 (1997).

[B2] Dmitriev, A.B., Filatov, A.I., and Eig, L.S., "Performance of halogen counters and some points on their operation, instruments, and experimental techniques" (in Russian), Prib. Techn. Eksp, pp. 157–161, Sept.–Oct. 1967; also English translation in Consultants Bureau, New York.

[B3] Fava, L. and Sanguist, V. "Dead time measurements of G-M counters," *Nuclear Instruments and Methods*, vol 42, pp. 325–326, 1966.

[B4] Knoll, G.F., *Radiation Detection and Measurement*, 2nd ed., New York:Wiley, 1989.[10]

[B5] Polly, P., "A method for the evaluation of the dose-sensitivity of G-M counters as a function of the energy," *Nuclear Instruments and Methods*, vol 50, pp. 197–208, 1967.

[B6] Price, W.J., *Nuclear Radiation Detectors*, 2nd ed. New York: McGraw Hill, 1964.

[B7] Radiological Health Handbook, U.S. Dept. of Commerce, Office of Technical Services, PB 121784R, Sept. 1960.[11]

[B8] Radiological Health Handbook, U.S. Dept. of Health, Education, and Welfare, pub. no. 2016, Jan. 1970.

[B9] Sharpe, J., *Nuclear Radiation Detectors*, 2nd ed. New York: Wiley, 1963.

[B10] van Duren, K., "Electrical characteristics of halogen filled Geiger counters," *Vide*, no. 95, pp. 235–248, Sept.–Oct. 1961.

A.2 Publications prior to 1960

The following publications are listed here because of their historical significance. Such a listing is obviously incomplete, but the listed publications contain references to additional and earlier publications.

[B11] Corson, D.R. and Wilson, R.R., "Particle and quantum counters," *Review of Scientific Instruments*, vol. 19, pp. 207–233, April 1948.

[B12] Curran, S.C. and Craggs, J.D., *Counting Tubes*, New York: Academic Press, 1949.

[10]Includes comprehensive descriptions of G-M counter operation and construction.

[11]See Footnote 10.

Copyright © 1999 IEEE. All rights reserved.

Copyright The Institute of Electrical and Electronics Engineers, Inc.
Provided by IHS under license with IEEE
No reproduction or networking permitted without license from IHS Not for Resale

[B13] Curtiss, L.F. "The Geiger-Mueller counter," *National Bureau of Standards,* Washington, DC, Circ. 490 Jan. 1950.

[B14] van Duuren, K., Jaspers, A.J.M., and Hermsen, J., "G-M counters," *Nucleonics*, vol. 17, pp. 86–94, June 1959.

[B15] Evans, R.D., "Radioactivity units and standards," *Nucleonics*, vol. 1, pp. 32–43, Oct. 1947.

[B16] Eig, L.S., "Low voltage halogen-containing counters," AEC-tr-4139.

[B17] Friedman, H., "Geiger counter tubes," *Proc. IRE*, vol. 37, pp. 791–808, July 1949.

[B18] Geiger, H. and Müller, W., *Physik,* 29, 839 (1928).

[B19] Korff, S.A., *Electron and Nuclear Counters,* Van Nostrand, 1946.

[B20] Korff, S.A., *Electron and Nuclear Counters,* Van Nostrand, 1955.

[B21] Kelley, G.G., Jordon, W.H., and Bell, P.R., "Electron component in Geiger discharge," *Review of Scientific Instruments,* vol. 21, pp. 330–332, April 1950.

[B22] Rossi, B.B. and Staub, H.H., "Ionization chambers and counters," *National Nuclear Energy Series*, div. 5, vol. 2, New York: McGraw Hill, 1949.

[B23] Wilkinson, D.H., *Ionization chambers and counters,* New York: Cambridge University Press, 1950.

[B24] "Gas discharge mechanism of halogen-quenched counters," *Applied Science Research,* sec. B, vol. 4, pp. 237–248, 1955.

[B25] "Double pulses in gas-halogen Geiger counters," *Applied Science Research*, sec. B, vol. 5, pp. 368–386, 1956.

[B26] van Zoonen, D. and Prast, G. Jr., "Properties of argon-bromide counters," *Applied Science Research,* sec. B, vol. 3, pp. 1–17, 1952.

[B27] van Zoonen, D., "The delay in the build-up of halogen-quenched counters," *Applied Science Research,* sec. B, vol. 3, pp. 377–389, 1953.

Copyright The Institute of Electrical and Electronics Engineers, Inc.
Provided by IHS under license with IEEE
No reproduction or networking permitted without license from IHS

Copyright © 1999 IEEE. All rights reserved.

Not for Resale

To order IEEE standards...

Call 1. 800. 678. IEEE (4333) in the US and Canada.

Outside of the US and Canada:
1. 732. 981. 0600

To order by fax:
1. 732. 981. 9667

IEEE business hours: 8 a.m.–4:30 p.m. (EST)

For Web access to IEEE standards information...

http://standards.ieee.org/

For information about IEEE standards on-line subscriptions...

http://standards.ieee.org/catalog/olis

ISBN 0-7381-1656-4



ISBN 0-7381-1656-4

Copyright The Institute of Electrical and Electronics Engineers, Inc.
Provided by IHS under license with IEEE
No reproduction or networking permitted without license from IHS

Not for Resale