IEEE Standards

IEEE Std 308-2001™
(Revision of IEEE Std 308-1991™)

308™

IEEE Standard Criteria for Class 1E Power Systems for Nuclear Power Generating Stations

IEEE Power Engineering Society

Sponsored by the
Nuclear Power Engineering Committee

Published by
The Institute of Electrical and Electronics Engineers, Inc.
3 Park Avenue, New York, NY 10016-5997, USA

1 March 2002

Print: SH94970
PDF: SS94970

Copyright The Institute of Electrical and Electronics Engineers, Inc.
Provided by IHS under license with IEEE
No reproduction or networking permitted without license from IHS

Not for Resale

IEEE Std 308-2001™
(Revision of
IEEE Std 308-1991™)

IEEE Standard Criteria for Class 1E Power Systems for Nuclear Power Generating Stations

Sponsor

Nuclear Power Engineering Committee
of the
IEEE Power Engineering Society

Approved 6 December 2001

IEEE-SA Standards Board

Abstract: Class 1E portions of alternating current and direct current power systems and instrumentation and control power systems in single-unit and multiunit nuclear power generating stations are covered. Not included are the preferred power supply; unit generator(s) and their buses; generator breaker; step-up, auxiliary, and start-up transformers; connections to the station switchyard; switchyard; transmission lines; and the transmission network. The intent is to provide criteria for the determination of Class 1E power system design features, criteria for sharing Class 1E power systems in multiunit stations, the requirements for their testing and surveillance, and the requirements for documentation of the Class 1E power system.
Keywords: Class 1E power systems, nuclear power station design, nuclear safety

---

The Institute of Electrical and Electronics Engineers, Inc.
3 Park Avenue, New York, NY 10016-5997, USA

Copyright © 2002 by the Institute of Electrical and Electronics Engineers, Inc.
All rights reserved. Published 1 March 2002. Printed in the United States of America.

Print: ISBN 0-7381-3082-6 SH94970
PDF: ISBN 0-7381-3083-4 SS94970

No part of this publication may be reproduced in any form, in an electronic retrieval system or otherwise, without the prior written permission of the publisher.

Copyright The Institute of Electrical and Electronics Engineers, Inc.
Provided by IHS under license with IEEE
No reproduction or networking permitted without license from IHS Not for Resale

IEEE Standards documents are developed within the IEEE Societies and the Standards Coordinating Committees of the IEEE Standards Association (IEEE-SA) Standards Board. The IEEE develops its standards through a consensus development process, approved by the American National Standards Institute, which brings together volunteers representing varied viewpoints and interests to achieve the final product. Volunteers are not necessarily members of the Institute and serve without compensation. While the IEEE administers the process and establishes rules to promote fairness in the consensus development process, the IEEE does not independently evaluate, test, or verify the accuracy of any of the information contained in its standards.

Use of an IEEE Standard is wholly voluntary. The IEEE disclaims liability for any personal injury, property or other damage, of any nature whatsoever, whether special, indirect, consequential, or compensatory, directly or indirectly resulting from the publication, use of, or reliance upon this, or any other IEEE Standard document.

The IEEE does not warrant or represent the accuracy or content of the material contained herein, and expressly disclaims any express or implied warranty, including any implied warranty of merchantability or fitness for a specific purpose, or that the use of the material contained herein is free from patent infringement. IEEE Standards documents are supplied "**AS IS**."

The existence of an IEEE Standard does not imply that there are no other ways to produce, test, measure, purchase, market, or provide other goods and services related to the scope of the IEEE Standard. Furthermore, the viewpoint expressed at the time a standard is approved and issued is subject to change brought about through developments in the state of the art and comments received from users of the standard. Every IEEE Standard is subjected to review at least every five years for revision or reaffirmation. When a document is more than five years old and has not been reaffirmed, it is reasonable to conclude that its contents, although still of some value, do not wholly reflect the present state of the art. Users are cautioned to check to determine that they have the latest edition of any IEEE Standard.

In publishing and making this document available, the IEEE is not suggesting or rendering professional or other services for, or on behalf of, any person or entity. Nor is the IEEE undertaking to perform any duty owed by any other person or entity to another. Any person utilizing this, and any other IEEE Standards document, should rely upon the advice of a competent professional in determining the exercise of reasonable care in any given circumstances.

Interpretations: Occasionally questions may arise regarding the meaning of portions of standards as they relate to specific applications. When the need for interpretations is brought to the attention of IEEE, the Institute will initiate action to prepare appropriate responses. Since IEEE Standards represent a consensus of concerned interests, it is important to ensure that any interpretation has also received the concurrence of a balance of interests. For this reason, IEEE and the members of its societies and Standards Coordinating Committees are not able to provide an instant response to interpretation requests except in those cases where the matter has previously received formal consideration.

Comments for revision of IEEE Standards are welcome from any interested party, regardless of membership affiliation with IEEE. Suggestions for changes in documents should be in the form of a proposed change of text, together with appropriate supporting comments. Comments on standards and requests for interpretations should be addressed to:

Secretary, IEEE-SA Standards Board
445 Hoes Lane
P.O. Box 1331
Piscataway, NJ 08855-1331
USA

Note: Attention is called to the possibility that implementation of this standard may require use of subject matter covered by patent rights. By publication of this standard, no position is taken with respect to the existence or validity of any patent rights in connection therewith. The IEEE shall not be responsible for identifying patents for which a license may be required by an IEEE standard or for conducting inquiries into the legal validity or scope of those patents that are brought to its attention.

The IEEE and its designees are the sole entities that may authorize the use of the IEEE-owned certification marks and/or trademarks to indicate compliance with the materials set forth herein.

Authorization to photocopy portions of any individual standard for internal or personal use is granted by the Institute of Electrical and Electronics Engineers, Inc., provided that the appropriate fee is paid to Copyright Clearance Center. To arrange for payment of licensing fee, please contact Copyright Clearance Center, Customer Service, 222 Rosewood Drive, Danvers, MA 01923 USA; +1 978 750 8400. Permission to photocopy portions of any individual standard for educational classroom use can also be obtained through the Copyright Clearance Center.

Copyright © 2002 IEEE. All rights reserved.

Copyright The Institute of Electrical and Electronics Engineers, Inc.
Provided by IHS under license with IEEE
No reproduction or networking permitted without license from IHS
Not for Resale

IEEE-SA Trademark Usage/Compliance Statement

Proper usage of the trademark **IEEE Std 308-2001™** is mandatory and is to be followed in all references of the Standard. The mark **IEEE®** is the registered trademark of the Institute of Electrical and Electronics Engineers, Inc., and must be used in bold type. It is to appear with the registered trademark symbol "®" the first time "**IEEE**" appears in the text. The use of "IEEE Std xxxx-200x" should include the trademark symbol "TM" (e.g., **IEEE Std xxxx-200x™**) at least the first time it is used in text, unless the number of the standard is also trademark registered (e.g., **802®**), then the symbol "®" must be used.

It is not permissible to use the standard number alone or with "**IEEE**" to indicate conformance or compliance with the associated standard. The user of the Standard should contact the Manager, Standards Licensing and Contracts for information concerning issues regarding indicating product compliance with an **IEEE** standard. To represent that a product has been designed to meet an **IEEE** standard, it is permissible to state that "the product has been engineered, designed or manufactured with the intent to meet the requirements of **IEEE Std xxxx-200x™**". However, it is ***not*** permissible to state or refer to a product as "xxxx compliant," "xxxx certified," "**IEEE xxxx** conformant," "**IEEE xxxxx** certified," or the like, unless the user has obtained a Certification License from the Manager, Standards Licensing and Contracts.

--`,,`-`-`,,`,,`,`,,`---
Copyright © 2002 IEEE. All rights reserved.
Copyright The Institute of Electrical and Electronics Engineers, Inc.
Provided by IHS under license with IEEE
No reproduction or networking permitted without license from IHS
Not for Resale

Introduction

(This introduction is not part of IEEE Std 308-2001™, IEEE Standard Criteria for Class 1E Power Systems for Nuclear Power Generating Stations.)

This standard presents criteria and requirements for the electrical power systems of nuclear power generating stations specifically related to providing protection for the health and safety of the public. The Institute of Electrical and Electronics Engineers (IEEE) has developed these criteria to provide guidance in the determination of the design features and the surveillance requirements and testing related to the station electric power systems. Each applicant for a construction permit or an operating license for a nuclear power generating station in the United States is required to develop these items to comply with the Title 10, Code of Federal Regulations, Part 50. Adherence to these criteria may not suffice for assuring the public health and safety because it is the integrated performance of the structures, the fluid systems, the instrumentation, and the electric systems of the station that limits the consequences of accidents. Failure to meet these requirements may be an indication of system inadequacy. Each applicant has the responsibility to assure all applicable parties that this integrated performance is adequate.

Background

IEEE Std 308-1970™ was prepared by Subcommittee 4, Auxiliary Power Systems of the Joint Committee on Nuclear Power Standards (JCNPS) of the IEEE Nuclear Science Group and the IEEE Power Engineering Society (PES). IEEE Std 308-1971™ incorporated the experience of the first edition and added multiunit considerations. IEEE Std 308-1974™ was completed by Working Group 4.1 of Subcommittee 4 of JCNPS, which had become the Nuclear Power Engineering Committee (NPEC) of the PES in 1973. IEEE Std 308-1978™ clarified the interface between the functional requirements of the Class 1E power system and the safety systems for elements of the safety system that are within the Class 1E power system. IEEE Std 308-1980™ implemented the recommendations of the Ad Hoc IEEE 308/603 Committee regarding the scope diagram for the IEEE Std 308™ and IEEE Std 603™ interface. IEEE Std 308-1991™ added criteria for interfacing the Class 1E power system with IEEE Std 765-1983™, IEEE Standard for the Preferred Power Supply for Nuclear Power Generating Stations, and IEEE Std 741-1990™, IEEE Standard Criteria for the Protection of Class 1E Power Systems and Equipment in Nuclear Power Generating Stations. The standard was also updated to reflect the latest requirements of IEEE Std 387-1984™, IEEE Standard Criteria for Diesel-Generator Units Applied as Standby Power Supplies for Nuclear Power Generating Stations; IEEE Std 946-1985™, IEEE Recommended Practice for the Design of Safety-Related DC Auxiliary Power Systems for Nuclear Power Generating Stations; and the recommendations of the NPEC Ad Hoc Committee on Shared Safety Systems. These recommendations resulted in a complete rewrite of the multiunit station considerations clause.

Safety function concept

A safety system, by definition, shall encompass all of the elements required to achieve a protective or safety function. Figure 2 and Figure 3 illustrate the systems and equipment needed to perform a typical safety function, such as post-accident heat removal. As part of the safety system, the role of the Class 1E power system is clearly that of an auxiliary supporting feature, providing electric power to other safety systems (e.g., recirculation spray system, containment spray system, etc.). In this capacity, the portions of the Class 1E power system that contribute to performing a safety function must comply with the requirements of IEEE Std 603-1991™. However, the components, equipment, and systems within the Class 1E power system that perform no direct safety function (e.g., overload devices, protective relaying, etc.) must meet the requirements in IEEE Std 603-1991™ that assure that those components, equipment, and systems do not degrade the Class 1E power system below an acceptable level.

--`,,`-`-`,,`,,`,`,,`---
Copyright © 2002 IEEE. All rights reserved.

Copyright The Institute of Electrical and Electronics Engineers, Inc.
Provided by IHS under license with IEEE
No reproduction or networking permitted without license from IHS
Not for Resale

Major role of Class 1E power system

The major role of the Class 1E power system is to provide electric power to the reactor trip system, engineered safety features, and auxiliary supporting features; therefore, the Class 1E power system is an auxiliary supporting feature.

The Class 1E power system is unique in that it extends throughout the plant, having far more complex interfaces than other auxiliary supporting features. Other auxiliary supporting features are usually limited to one area or a single process in the plant and are basically mechanical systems. Characteristic of the complex interfaces of the Class 1E power system is the fact that it is an auxiliary supporting feature; other auxiliary features are auxiliary supporting features for it, and the Class 1E power system may provide support for non-safety system equipment and provide the means for the execution of the safety system protective actions.

The sense and command features include equipment that produces signals (e.g., current transformer, voltage transformer, etc.), measures electric system parameters (e.g., voltage, current, watts, etc.), or functions to limit degradation effects (e.g., protective relaying, thermal overloads, undervoltage relays, etc.). The sense and command features of the Class 1E power system that directly perform a safety function shall comply with the requirements of IEEE Std 603-1991™. Sense and command features of the Class 1E power system that do not have a direct safety function must be analyzed to show that their failure will have no unacceptable effects on the Class 1E power system.

In their execute features role, some Class 1E power system equipment, switchgear, circuit breakers, power cabling, and loads (primarily motors) are not only part of the Class 1E power system, but are also integral parts of the engineered safety features.

Current revision

IEEE Std 308-2001™ adds criteria for design and testing documentation of Class 1E power systems, including verification and validation. The standard adds to the criteria for power quality to include potential effects of harmonic distortion and degraded grid conditions. A general update to correct references and to address comments received since the standard was last revised has also been performed.

Working Group SC 4.1 members involved in the preparation of this standard were the following:

J. E. Stoner, Jr., *Chair*

George Attarian	D. T. Goodney	G. D. Manasco
Paul Gill	H. A. Robinson	William J. Mindick

Copyright © 2002 IEEE. All rights reserved.
Copyright The Institute of Electrical and Electronics Engineers, Inc.
Provided by IHS under license with IEEE
No reproduction or networking permitted without license from IHS
Not for Resale

The following members of the balloting committee voted on this standard. Balloters may have voted for approval, disapproval, or abstention.

Satish K. Aggarwal
James W. Anderson
George Attarian
Vincent P. Bacanskas
Farouk D. Baxter
Mark D Bowman
Daniel F. Brosnan
Robert C. Carruth
John P. Carter
S.K. Chaudhuri
Raymond J. Christensen
Robert L. Copyak
John J. Disosway
Surinder K. Dureja
Julian Forster
John Kenneth Greene
Robert E. Hall
Gregory K. Henry
David A. Horvath
Paul R. Johnson
Gerald B. Lantz
John D. MacDonald
Alexander Marion
John E. Merando Jr
Richard B. Miller
William J. Mindick
Burt Nemroff
Roger D. Parker
William G. Schwartz
Thomas R. Sims
Barry J. Skoras
James E. Stoner
John Tanaka
John H. Taylor
James E. Thomas
Gary J. Toman
John T. Ullo
Raymond Weronick
David J. Zaprazny
Mark S. Zar

When the IEEE-SA Standards Board approved this standard on 6 December 2001, it had the following membership:

Donald N. Heirman, *Chair*

James T. Carlo, *Vice Chair*

Judith Gorman, *Secretary*

Satish K. Aggarwal
Mark D. Bowman
Gary R. Engmann
Harold E. Epstein
H. Landis Floyd
Jay Forster*
Howard M. Frazier
Ruben D. Garzon
James H. Gurney
Richard J. Holleman
Lowell G. Johnson
Robert J. Kennelly
Joseph L. Koepfinger*
Peter H. Lips
L. Bruce McClung
Daleep C. Mohla
James W. Moore
Robert F. Munzner
Ronald C. Petersen
Gerald H. Peterson
John B. Posey
Gary S. Robinson
Akio Tojo
Donald W. Zipse

*Member Emeritus

Also included is the following nonvoting IEEE-SA Standards Board liaison:

Alan Cookson, *NIST Representative*

Donald R. Volzka, *TAB Representative*

Don Messina

IEEE Standards Project Editor

Copyright © 2002 IEEE. All rights reserved.

Copyright The Institute of Electrical and Electronics Engineers, Inc.
Provided by IHS under license with IEEE
No reproduction or networking permitted without license from IHS
Not for Resale

Contents

1. Overview ... 1

1.1 Scope ... 1
1.2 Purpose ... 2

2. References ... 4

3. Definitions ... 5

4. Principal design criteria ... 8

4.1 General ... 8
4.2 Relationship between the safety system and Class 1E power system ... 8
4.3 Design basis event effects ... 8
4.4 Design basis ... 8
4.5 Power quality ... 11
4.6 Location of indicators and control ... 11
4.7 Identification ... 11
4.8 Independence ... 12
4.9 Equipment qualification ... 12
4.10 Single-failure criterion ... 12
4.11 Connection of non-class 1E circuits ... 12
4.12 Control of access ... 13
4.13 Circuits that penetrate containment ... 13
4.14 Protection ... 13

5. Supplementary design criteria ... 13

5.1 Class 1E power systems ... 13
5.2 Alternating current power systems ... 13
5.3 Direct current power systems ... 16
5.4 Instrumention and control power systems ... 18
5.5 Execute features ... 20
5.6 Sense and command features ... 21

6. Surveillance and test requirements ... 21

6.1 Surveillance methods ... 21
6.2 Preoperational equipment tests and inspections ... 23
6.3 Preoperational system test ... 24
6.4 Periodic tests ... 24

7. Multiunit station considerations ... 23

7.1 Criteria ... 24
7.2 Standby power supply capacity ... 25
7.3 Battery supply ... 25

8. Documentation ... 25

8.1 Design documentation records ... 25
8.2 Verification and validation ... 25
8.3 Test records ... 26

Copyright © 2002 IEEE. All rights reserved.

Copyright The Institute of Electrical and Electronics Engineers, Inc.
Provided by IHS under license with IEEE
No reproduction or networking permitted without license from IHS
Not for Resale

TABLES

Table 1 Items included in systems covered by scope 1
Table 2 Illustrative malfunctions, accidents, etc. 11
Table 3 Illustrative surveillance methods 21

FIGURES

Figure 1 Example of a Class 1E power system for single unit with two 100% capacity divisions 3
Figure 2 Typical safety function and the Class 1E power system 9
Figure 3 Simplified electrical one-line diagram illustrating one division of a Class 1E power system 10

Copyright © 2002 IEEE. All rights reserved.

Copyright The Institute of Electrical and Electronics Engineers, Inc.
Provided by IHS under license with IEEE
No reproduction or networking permitted without license from IHS
Not for Resale

IEEE Standard Criteria for Class 1E Power Systems for Nuclear Power Generating Stations

1. Overview

1.1 Scope

This standard applies to the Class 1E portions of the following systems and equipment in single-unit and multiunit nuclear power generating stations:

— Alternating current power systems
— Direct current power systems
— Instrumentation and control (I&C) power systems

These systems include the items listed in Table 1.

Table 1—Items included in systems covered by scope

General elements	Illustrative examples
Power sources	
Sources	Standby generator
	Batteries
Components and distribution	Transformers
	Buses
Equipment	Switchgear
	Cable
	Battery chargers
	Inverters

Copyright © 2002 IEEE. All rights reserved.

Copyright The Institute of Electrical and Electronics Engineers, Inc.
Provided by IHS under license with IEEE
No reproduction or networking permitted without license from IHS
Not for Resale

Table 1—Items included in systems covered by scope *(continued)*

General elements	Illustrative examples
Execute features	
Actuation devices	Circuit breakers
	Controllers
	Control relays
	Control switches
	Pilot valves
Actuated equipment	Motors
	Solenoids
	Heaters
Sense and command features	
Instrumentation, controls, and electrical protection (associated with power supplies and distribution equipment)	Surveillance indicators
	Switches
	Current transformers
	Voltage transformers
	Transducers
	Protective relays
	Frequency relays
	Microprocessors

This standard does not apply to the preferred power supply; the unit generators and their buses; generator breaker; step-up, auxiliary, and start-up transformers; connections to the station switchyard; switchyard; transmission lines; and the transmission network (see Figure 1).

1.2 Purpose

The purpose of this standard is to provide the following:

— The principal design criteria and the design features of the Class 1E power systems that enable the systems to meet their functional requirements under the conditions produced by the applicable design basis events.
— The requirements for tests and surveillance of the Class 1E power systems.
— The criteria for sharing Class 1E power systems in multiunit stations.
— The requirements for documentation of the Class 1E power systems.

Copyright © 2002 IEEE. All rights reserved.
Copyright The Institute of Electrical and Electronics Engineers, Inc.
Provided by IHS under license with IEEE
No reproduction or networking permitted without license from IHS
Not for Resale

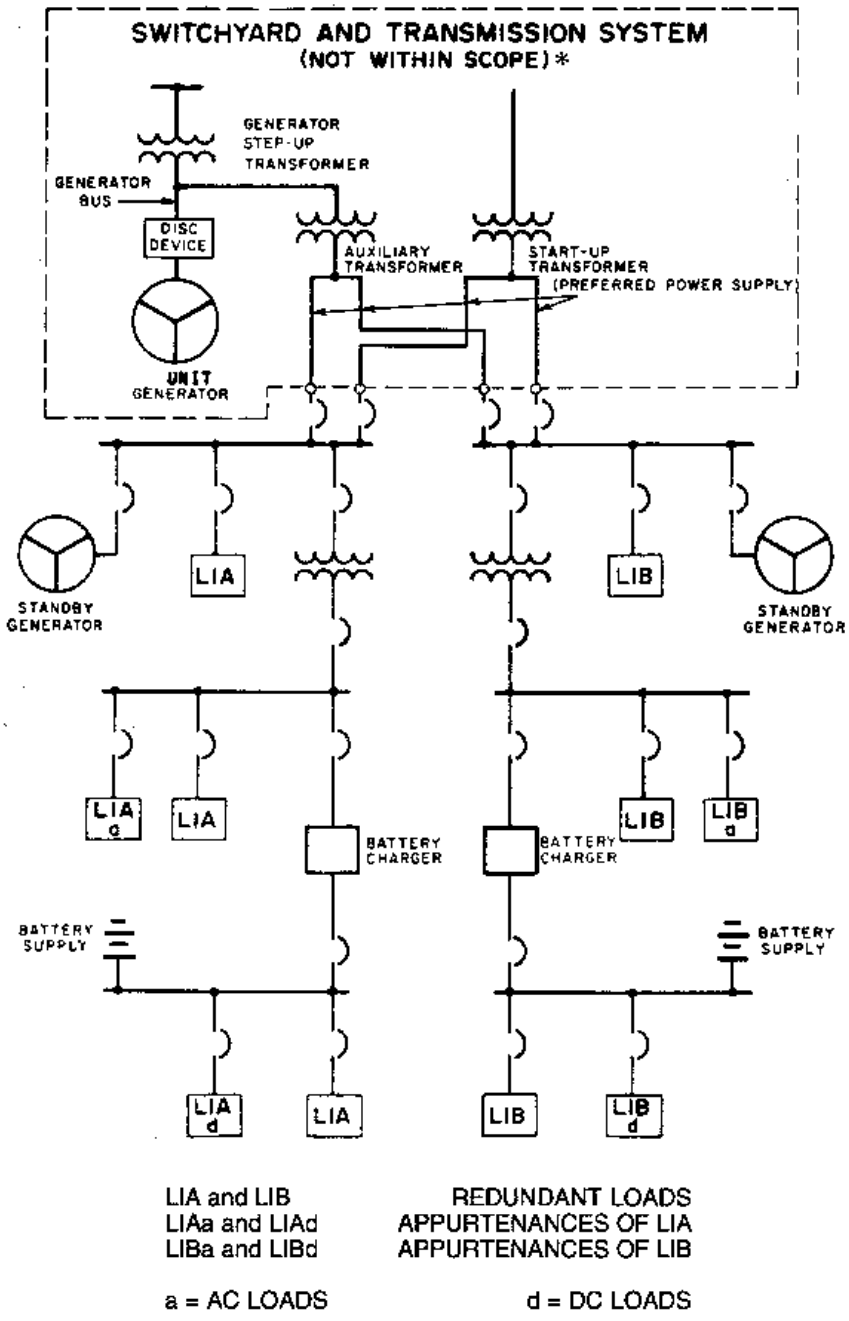

*Refer to IEEE Std 765-1995 for recommended designs.

Figure 1—Example of a Class 1E power system for single unit with two 100% capacity divisions

Copyright © 2002 IEEE. All rights reserved.

Copyright The Institute of Electrical and Electronics Engineers, Inc.
Provided by IHS under license with IEEE
No reproduction or networking permitted without license from IHS
Not for Resale

2. References

The following publications shall be used in conjunction with this standard:

ASME NQA-1-1997, Quality Assurance Requirements for Nuclear Facilities Applications.[1]

CFR (Code of Federal Regulations), Title 10: Energy, Part 100, published by Office of the Federal Register, 1995.[2]

IEEE Std 7-4.3.2-1993™, IEEE Standard Criteria for Digital Computers in Safety Systems of Nuclear Power Generating Stations.[3]

IEEE Std 317-1983™ (Reaff 1996), IEEE Standard for Electric Penetration Assemblies in Containment Structures for Nuclear Power Generating Stations.

IEEE Std 323-1983™ (Reaff 1996), IEEE Standard for Qualifying Class 1E Equipment for Nuclear Power Generating Stations.

IEEE Std 338-1987™ (Reaff 2000), IEEE Standard Criteria for the Periodic Surveillance Testing of Nuclear Power Generating Station Safety Systems.

IEEE Std 352-1987™ (Reaff 1999), IEEE Guide for General Principles of Reliability Analysis of Nuclear Power Generating Station Safety Systems.

IEEE Std 379-1994™, IEEE Standard Application of the Single-Failure Criterion to Nuclear Power Generating Station Safety Systems.

IEEE Std 384-1992™ (Reaff 1998), IEEE Standard Criteria for Independence of Class 1E Equipment and Circuits.

IEEE Std 387-1995™, IEEE Standard Criteria for Diesel-Generator Units Applied as Standby Power Supplies for Nuclear Power Generating Stations.[4]

IEEE Std 415-1986™ (Reaff 1992), IEEE Guide for Planning of Pre-Operational Testing Programs for Class 1E Power Systems for Nuclear Power Generating Stations.[4]

IEEE Std 450-1995™, IEEE Recommended Practice for Maintenance, Testing, and Replacement of Vented Lead-Acid Batteries for Stationary Applications.

IEEE Std 484-1996™, IEEE Recommended Practice for Installation Design and Installation of Vented Lead-Acid Batteries for Stationary Applications.

IEEE Std 485-1997™, IEEE Recommended Practice for Sizing Lead-Acid Batteries for Stationary Applications.

[1]ASME publications are available from the American Society of Mechanical Engineers, 3 Park Avenue, New York, NY 10016-5990, USA (http://www.asme.org/).

[2]This document is available from the Superintendent of Documents, U.S. Government Printing Office, Washington, DC 20402.

[3]IEEE publications are available from the Institute of Electrical and Electronics Engineers, 445 Hoes Lane, P.O. Box 1331, Piscataway, NJ 08855-1331, USA (http://standards.ieee.org/).

[4]This standard has been withdrawn; however, copies can be obtained from Global Engineering, 15 Inverness Way East, Englewood, CO 80112-5704, USA, tel. (303) 792-2181 (http://global.ihs.com/).

Copyright © 2002 IEEE. All rights reserved.
Copyright The Institute of Electrical and Electronics Engineers, Inc.
Provided by IHS under license with IEEE
No reproduction or networking permitted without license from IHS
Not for Resale

IEEE Std 494-1974™ (Reaff 1990), IEEE Standard Method for Identification of Documents Related to Class 1E Equipment and Systems for Nuclear Power Generating Stations.[4]

IEEE Std 577-1976™ (Reaff 1992), IEEE Standard Requirements for Reliability Analysis in the Design and Operation of Safety Systems for Nuclear Power Generating Stations.

IEEE Std 603-1998™, IEEE Standard Criteria for Safety Systems for Nuclear Power Generating Stations.

IEEE Std 741-1997™, IEEE Standard Criteria for the Protection of Class 1E Power Systems and Equipment in Nuclear Power Generating Stations.

IEEE Std 765-1995™, IEEE Standard for Preferred Power Supply (PPS) for Nuclear Power Generating Stations.

IEEE Std 946-1992™, IEEE Recommended Practice for the Design of DC Auxiliary Power Systems for Generating Stations.

3. Definitions

For the purposes of this standard, the following terms and definitions apply. IEEE 100, *The Authoritative Dictionary of IEEE Standards Terms,* Seventh Edition, should be referenced for terms not defined in this clause.

3.1 acceptable: Demonstrated to be adequate by the safety analyses of the station.

3.2 actuated equipment: The assembly of prime movers and driven equipment used to accomplish a protective action.

NOTE—Examples of prime movers are turbines, motors, and solenoids. Examples of driven equipment are pumps and valves.

3.3 actuation device: A component or assembly of components that directly controls the motive power (e.g., electricity, compressed air, hydraulic fluid, etc.) for actuated equipment.

NOTE—Examples of actuation devices are circuit breakers, relays, and pilot valves.

3.4 administrative controls: Rules, orders, instructions, procedures, policies, practices, and designations of authority and responsibility.

3.5 auxiliary supporting features: Systems or components that provide services (e.g., cooling, lubrication, energy supply) that are required for the safety systems to accomplish their safety functions.

3.6 channel: An arrangement of components and modules required to generate a single protective action signal when required by a generating station condition. A channel loses its identity where single protective action signals are combined.

3.7 Class 1E: The safety classification of the electric equipment and systems that are essential to emergency reactor shutdown, containment isolation, reactor core cooling, and containment and reactor heat removal or that are otherwise essential in preventing significant release of radioactive material to the environment.[5]

[5]Users of this standard are advised that "Class 1E" is a functional term. Equipment and systems are to be classified Class 1E only if they fulfill the functions listed in the definition. Identification of systems or equipment as Class 1E based on anything other than their function is an improper use of the term and should be avoided.

Copyright © 2002 IEEE. All rights reserved.

Copyright The Institute of Electrical and Electronics Engineers, Inc.
Provided by IHS under license with IEEE
No reproduction or networking permitted without license from IHS Not for Resale

3.8 design basis events: Postulated events used in the design to establish the acceptable performance requirements of the structures, systems, and components.

3.9 detectable failures: Failures that can be identified through periodic testing or can be revealed by alarm or anomalous indication. Component failures that are detected at the channel, division, or system level are detectable failures.

NOTE—Identifiable but nondetectable failures are failures identified by analysis that cannot be detected through surveillance testing or cannot be revealed by alarm or anomalous indication.

3.10 division: The designation applied to a given system or set of components that enables the establishment and maintenance of physical, electrical, and functional independence from other redundant sets of components.

3.11 documentation: Any written or pictorial information describing, defining, specifying, reporting, or certifying activities, requirements, procedures, or results.

3.12 engineered safety features: Features of a unit, other than reactor trip or features used only for normal operation, that are provided to prevent, limit, or mitigate the release of radioactive material.

3.13 execute features: The electrical and mechanical equipment and interconnections that perform a function, associated directly or indirectly with a safety function, upon receipt of a signal from the sense and command features. The scope of the execute features extends from the sense and command features output to and including the actuated equipment-to-process coupling.

3.14 independence: The state in which no mechanism exists by which any single design basis event can cause redundant equipment to be inoperable.

3.15 isolating device: A device in a circuit that prevents malfunction in one section of a circuit from causing unacceptable influences in other sections of the circuit or in other circuits.

3.16 load group: An arrangement of buses, transformers, switching equipment, and loads fed from a common power supply within a division.

3.17 module: Any assembly of interconnected components that constitutes an identifiable device, instrument, or piece of equipment. A module can be disconnected, removed as a unit, and replaced with a spare unit. It has definable performance characteristics that permit it to be tested as a unit. A module could be a card, a drawout circuit breaker, or other subassembly of a larger device, provided it meets the requirements of this definition.

3.18 nuclear power generating station (station): A plant where electric energy is produced from nuclear energy by means of suitable apparatus. The station may consist of one or more generating units.

3.19 power sources: The electrical and mechanical equipment and interconnections necessary to generate or convert power.

NOTE—Electric power source and power supply are interchangeable within the context of this document.

3.20 preferred power supply (PPS): The power supply from the transmission system to the Class 1E distribution system that is preferred to furnish electric power under accident and post-accident conditions.

3.21 programmable digital computer: A device that can store instructions and is capable of executing a systematic sequence of operations performed on data that is controlled by internally stored instructions.

Copyright © 2002 IEEE. All rights reserved.
Copyright The Institute of Electrical and Electronics Engineers, Inc.
Provided by IHS under license with IEEE
No reproduction or networking permitted without license from IHS
Not for Resale

3.22 protection system: The part of the sense and command features involved in generating the signals used primarily for the reactor trip system and engineered safety features.

3.23 protective action: The initiation of a signal within the sense and command features, or the operation of equipment within the execute features, to accomplish a safety function.

3.24 redundant equipment or system: A piece of equipment or a system that duplicates the essential function of another piece of equipment or system to the extent that either may perform the required function regardless of the state of operation or failure of the other.

NOTE—Redundancy can be accomplished by using identical equipment, equipment diversity, or functional diversity.

3.25 safety class structures: Structures designed to protect Class 1E equipment against the effects of design basis events.

3.26 safety function: One of the processes or conditions (e.g., emergency negative reactivity insertion, post-accident heat removal, emergency core cooling, post-accident radioactivity removal, containment isolation) essential to maintain plant parameters within acceptable limits established for a design basis event.

NOTE—A safety function is achieved by the completion of all required protective actions by the reactor trip system and the engineered safety features, or both, concurrent with the completion of all required protective actions by the auxiliary supporting features.

3.27 safety group: A given minimal set of interconnected components, modules, and equipment that can accomplish a safety function.

NOTE—A safety group may include one or more divisions. In a design where each division can accomplish a safety function, each division is a safety group. However, a design consisting of three 50% capacity systems separated into three divisions would have three safety groups; any two out of three divisions are required to be operating to accomplish the safety function.

3.28 safety system: A system that is relied upon to remain functional during and following design basis events to ensure (1) the integrity of the reactor coolant pressure boundary, (2) the capability to shut down the reactor and maintain it in a safe shutdown condition, or (3) the capability to prevent or mitigate the consequences of accidents that could result in potential offsite exposures comparable to the 10CFR Part 100 guidelines.[6]

3.29 sense and command features: The electrical and mechanical components and interconnections involved in generating the signals associated directly or indirectly with the safety functions. The scope of the sense and command features extends from the measured process variables to the execute features input terminals.

3.30 significant: Demonstrated to be important by the safety analysis of the station.

3.31 standby power supply: The power supply that is selected to furnish electric energy when the preferred power supply is not available.

3.32 unit: A nuclear steam supply system and its associated turbine-generator, auxiliaries, and engineered safety features.

3.33 verification and validation: The process of determining whether the requirements for a system or component are complete and correct, the products of each development phase fulfill the requirements or

[6]For information on references, see Clause 2.

Copyright © 2002 IEEE. All rights reserved.

Copyright The Institute of Electrical and Electronics Engineers, Inc.
Provided by IHS under license with IEEE
No reproduction or networking permitted without license from IHS Not for Resale

conditions imposed by the previous phase, and the final system or component complies with specified requirements.

4. Principal design criteria

4.1 General

The Class 1E power systems shall be designed to assure that no design basis event causes the following:

— A loss of electric power to a number of engineered safety features, surveillance devices, or protection system devices so that a required safety function cannot be performed.
— A loss of electric power to equipment that could result in a reactor transient capable of causing significant damage to the fuel cladding or to the reactor coolant pressure boundary.

4.2 Relationship between the safety system and Class 1E power system

The portions of the Class 1E power system that are required to support safety systems in the performance of their safety functions shall meet the requirements of IEEE Std 603-1998™.

Other components, equipment, and systems within the Class 1E power system that have no direct safety function and are provided only to increase the availability or reliability of the Class 1E power system shall meet the requirements in IEEE Std 603-1998™ that assure that these components, equipment, and systems do not degrade the Class 1E power system below an acceptable level.

The safety system criteria that these elements would not have to meet, for example, include the criteria as defined in IEEE Std 603-1998™ for operating bypass, maintenance bypass, and bypass indication. An analysis shall be made to assure that when these components, equipment, or systems are utilized, the consequences of any operation or failure are acceptable to the Class 1E power system.

Components, equipment, or systems required to provide some protective action, such as containment integrity protection, or utilized to provide isolation protection, are covered by all of the requirements of IEEE Std 603-1998™.

Figure 2 illustrates the relationship between a typical safety function and the Class 1E power system. Figure 3 illustrates a Class 1E power system and its components.

4.3 Design basis event effects

Design basis events established for the unit shall indicate the postulated events that might adversely affect the Class 1E power system. The severity and expected results of those events shall be defined. The required portions of the Class lE power systems shall be capable of performing their function when subjected to the effects of any design basis event.

4.4 Design basis

A specific design basis shall be provided for the Class 1E power systems of each nuclear power generating station. The design basis shall include, as a minimum, the following:

a) Events requiring operation of the Class 1E power systems.
b) Actuation signals for operation of the Class 1E power systems.

Copyright © 2002 IEEE. All rights reserved.
Copyright The Institute of Electrical and Electronics Engineers, Inc.
Provided by IHS under license with IEEE
No reproduction or networking permitted without license from IHS Not for Resale

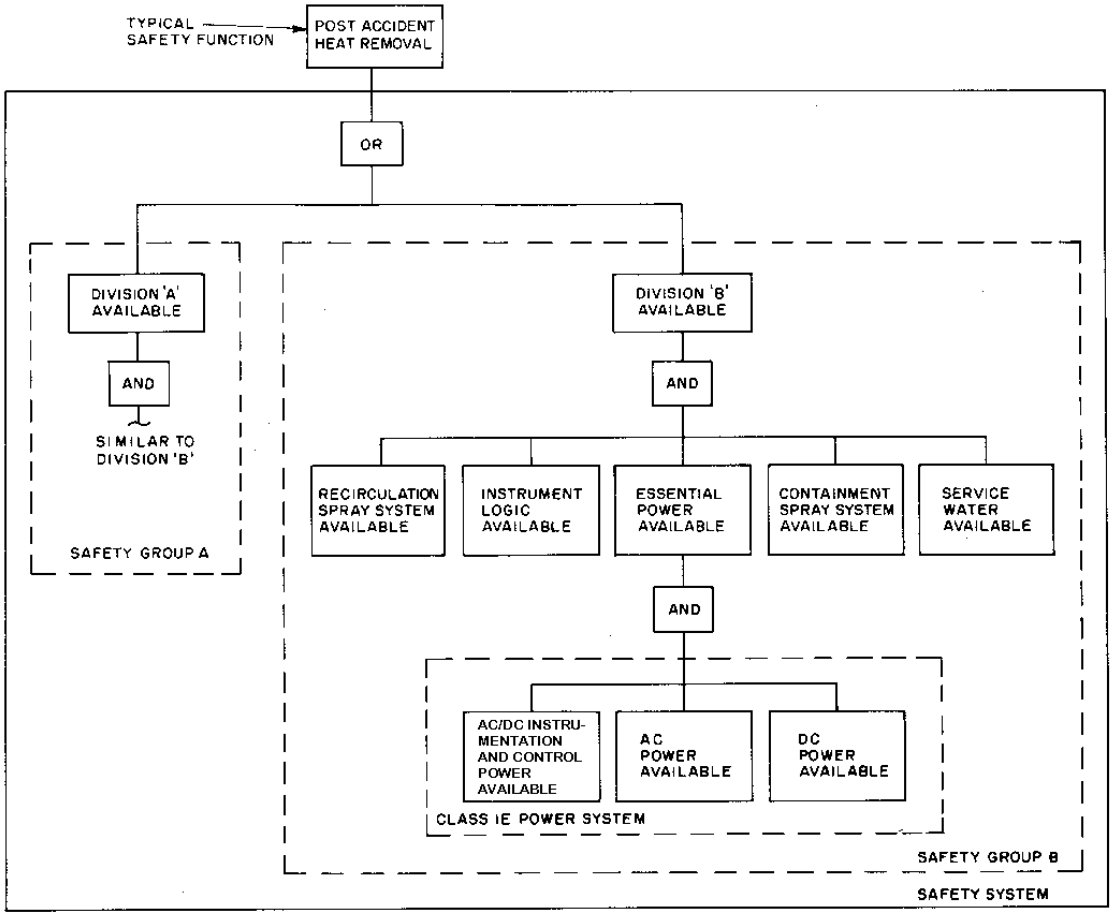

NOTE—Each division consists of a 100% capacity system. Therefore, one division is needed for each safety group to accomplish the safety function.

Figure 2—Typical safety function and the Class 1E power system

c) A list of the loads connected to the Class 1E buses and standby power supplies.
d) The sequence for start-up and the loading profile of the Class 1E power sources.
e) Time, voltage, speed, and other limits applicable to the standby generators and their prime movers when subjected to the sequence of events in item d) of this subclause.
f) The malfunctions, accidents, environmental events, and operating modes (see Table 2) that could physically damage Class 1E power systems or lead to degradation of system performance and for which provisions shall be incorporated.
g) The acceptable ranges for transient and steady-state conditions of both the energy supply and environment (e.g., voltage, frequency, humidity, temperature, pressure, vibration, etc.) during normal, abnormal, and accident circumstances throughout which the equipment must perform.
h) Minimum equipment or system performance criteria (e.g., standby power supply unit start-up time, undervoltage relay accuracy, voltage regulation limits, load limits, battery charging time, voltage, etc.).
i) Conditions that should be permitted to shut down or disconnect Class 1E power sources (e.g., differential relay actuation, engine overspeed).

Copyright © 2002 IEEE. All rights reserved.

Copyright The Institute of Electrical and Electronics Engineers, Inc.
Provided by IHS under license with IEEE
No reproduction or networking permitted without license from IHS Not for Resale

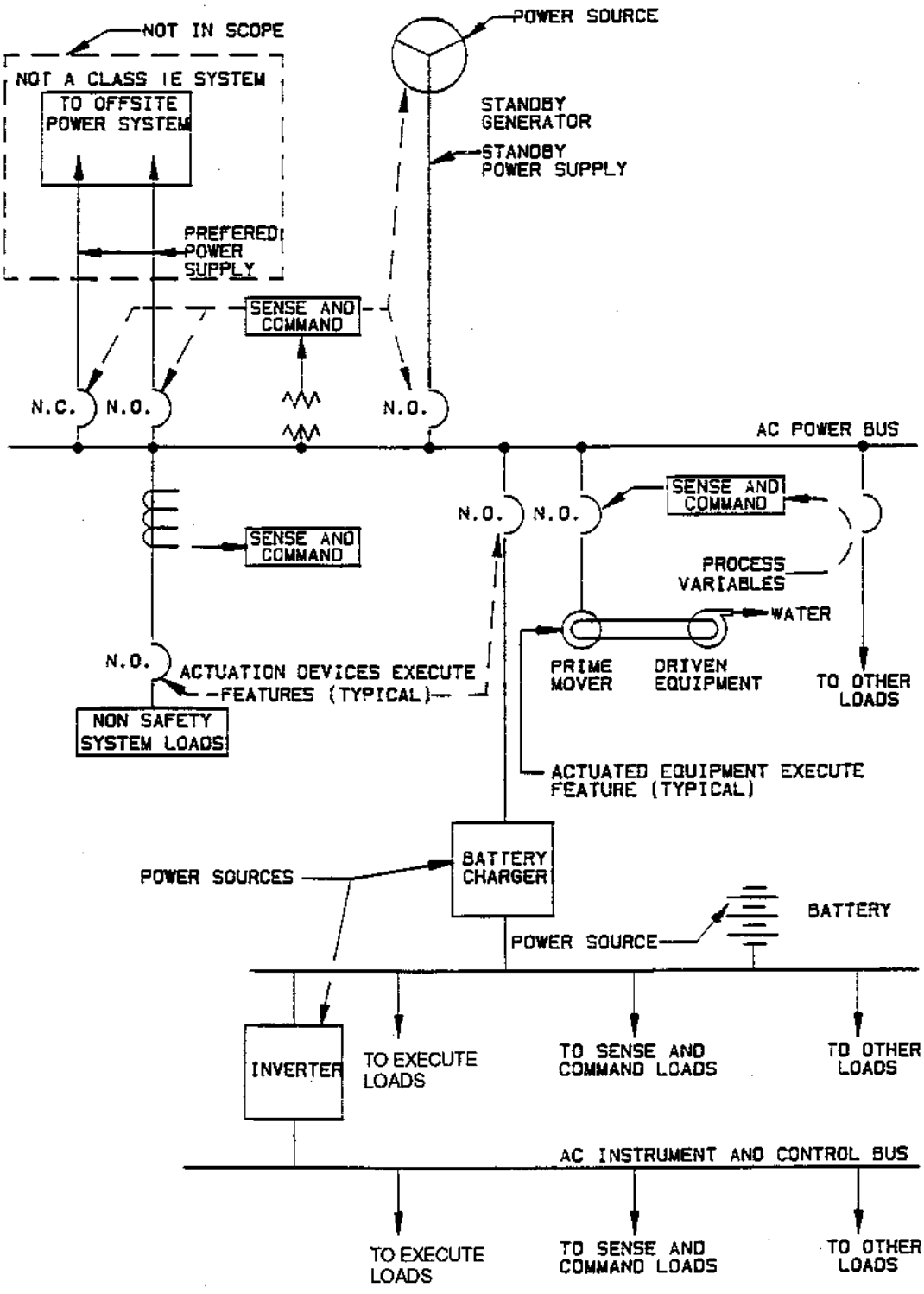

N.O. = normally open N.C. = normally closed

Figure 3—Simplified electrical one-line diagram illustrating one division of a Class 1E power system

Copyright © 2002 IEEE. All rights reserved.
Copyright The Institute of Electrical and Electronics Engineers, Inc.
Provided by IHS under license with IEEE
No reproduction or networking permitted without license from IHS
Not for Resale

Table 2—Illustrative malfunctions, accidents, etc.

Natural phenomena	
Earthquake	Rain, ice, and snow
Wind	Floods
Hurricane	Lightning
Tornado	Extreme temperature conditions
Postulated phenomena	
1) Postulated accident environment (humidity, temperature, pressure, chemical properties, radiation)	
2) Fires	
3) Accident-generated missiles, pipe whip	
4) Fire protection system operation	
5) Accident-generated flooding, sprays, or jets	
6) Postulated loss of the preferred power supply combined with any of the phenomena listed in item 1) through item 5) of this table.	
7) Postulated loss of all alternating current electric power (station blackout)	
8) Single equipment malfunction	
9) Single act, event, component failure, or circuit fault that can cause multiple equipment malfunctions	
10) Single equipment maintenance outage	

4.5 Power quality

The variations of voltage, frequency, and waveform (including the effects of harmonic distortion) in the Class 1E power systems during any mode of plant operation shall not degrade the performance of any safety system load below an acceptable level. Particular attention should be paid to the effects of degraded grid conditions; refer to IEEE Std 741-1997™ for details.

4.6 Location of indicators and control

The design shall provide controls and indicators in the main control room, and provisions shall be made for control and indication outside the main control room for the following:

— Circuit breakers that switch Class 1E buses between the preferred and the standby power supply.
— Standby power supply.
— Circuit breakers, contactors, and other equipment as required for safety systems that must function to bring the plant to a safe shutdown condition.

4.7 Identification

Components of Class 1E power systems and their associated design, operating and maintenance documents shall be marked or labeled in a distinctive manner. All documents shall be identified in accordance with the requirements of IEEE Std 494-1974™.

--`,-`-`,,`,,`,`,,`---
Copyright © 2002 IEEE. All rights reserved.

Copyright The Institute of Electrical and Electronics Engineers, Inc.
Provided by IHS under license with IEEE
No reproduction or networking permitted without license from IHS
Not for Resale

4.8 Independence

Independence of redundant equipment and circuits shall be in accordance with IEEE Std 384-1992™.

4.9 Equipment qualification

Class 1E power system equipment shall be qualified by type test, previous operating experience, or analysis or by any combination of these three methods to substantiate that it is capable of meeting, on a continuous basis, the performance requirements as specified in the design basis.

Class 1E power system equipment shall be qualified in accordance with IEEE Std 323-1983™.

4.10 Single-failure criterion

The Class 1E power systems shall perform all safety functions required for a design basis event in the presence of

a) Any single detectable failure within the Class 1E power systems concurrent with all identifiable but nondetectable failures
b) All failures caused by the single failure
c) All failures and spurious system actions that cause or are caused by the design basis event requiring the safety functions

The single failure could occur prior to, or at any time during, the design basis event for which the safety system is required to function. The single-failure criterion applies to the Class 1E power systems whether control is by automatic or manual means. IEEE Std 379-1994™ provides guidance on the application of the single-failure criterion

The performance of a probabilistic assessment of the Class 1E power system may be used to demonstrate that certain postulated failures need not be considered in the application of the criterion.

A probabilistic assessment is intended to eliminate consideration of events and failures that are not credible; it shall not be used in lieu of the single-failure criterion.

IEEE Std 352-1987™ and IEEE Std 577-1976™ provide guidance for probabilistic assessment.

Where reasonable indication exists that a design that meets the single-failure criterion may not satisfy all the reliability requirements specified in the design basis, a probabilistic assessment of the Class 1E power system shall be performed. The assessment shall not be limited to single failures. If the assessment shows that the design basis reliability requirements are not met, design features shall be provided or corrective modifications shall be made to ensure that the system meets the specified reliability requirements.

4.11 Connection of non-Class 1E circuits

Connection of non-Class 1E circuits to Class 1E power systems is not recommended. However, if connections are made, they should be limited to loads that need connection to a reliable standby power source. If non-Class 1E circuits are supplied from Class 1E power systems, the Class 1E systems shall not be degraded below an acceptable level with respect to the requirements of this standard.

The non-Class 1E circuits shall meet the independence and isolation requirements as established in IEEE Std 384-1992™.

Copyright © 2002 IEEE. All rights reserved.
Copyright The Institute of Electrical and Electronics Engineers, Inc.
Provided by IHS under license with IEEE
No reproduction or networking permitted without license from IHS
Not for Resale

4.12 Control of access

The plant physical design shall permit the administrative control of access to Class 1E power equipment areas.

4.13 Circuits that penetrate containment

Failure of any circuit that penetrates containment shall not result in exceeding the current-versus-time capability of the containment penetration for that circuit during normal operation or during any design basis event requiring containment isolation. Further guidance is given in IEEE Std 317-1983™ and IEEE Std 741-1997™.

4.14 Protection

Protective devices shall be provided to limit the degradation of the Class 1E power systems below an acceptable level in accordance with IEEE Std 741-1997™.

5. Supplementary design criteria

5.1 Class 1E power systems

5.1.1 Description

The Class 1E power systems consist of an alternating current power system, a direct current power system, and an instrument and control power system. Figure 1 illustrates one possible arrangement of the Class 1E power systems for a single-unit station.

5.1.2 Function

The Class 1E power systems shall support the safety systems by providing acceptable power under the conditions stated in the design basis.

5.1.3 Interaction

The duration of the connection between the preferred power supply and the standby power supply shall be minimized (e.g., limited to the time required to perform standby power supply testing). Refer to IEEE Std 741-1997™ for information on automatic bus transfers that may be included in the design of these systems.

5.2 Alternating current power systems

5.2.1 General

The alternating current power system shall include power supplies and distribution systems arranged to provide power to the Class 1E alternating current loads and controls. Features such as physical separation, electrical isolation, redundancy, and qualified equipment shall be included in the design to aid in preventing a mechanism by which a single design basis event could cause redundant equipment within the station's Class 1E power system to be inoperable. Design requirements shall include the following:

a) The Class 1E electric loads shall be separated into two or more redundant load groups.

--`,,`-`-`,,`,,`,`,,`---
Copyright © 2002 IEEE. All rights reserved.

Copyright The Institute of Electrical and Electronics Engineers, Inc.
Provided by IHS under license with IEEE
No reproduction or networking permitted without license from IHS Not for Resale

b) The protective actions of each load group shall be independent of the protective actions provided by redundant load groups.
c) Each of the redundant load groups shall have access to both a preferred and a standby power supply.
d) Two or more load groups may have a common power supply if the consequences of the loss of the common power supply to the load groups under design basis events are acceptable.
e) Features shall be incorporated in the design of the standby power supply so that any design basis event will not cause failures in redundant power sources. In addition, the design shall minimize common-cause failures of a preferred power source and standby power source associated with a single load group.

5.2.2 Distribution system

5.2.2.1 Description

The distribution system shall consist of all equipment in the distribution circuit from its supply circuit breaker(s) to the loads.

5.2.2.2 Capability

Each distribution circuit shall be capable of transmitting sufficient energy to start and operate all required loads in that circuit for all plant conditions described in the design basis.

5.2.2.3 Independence

Distribution circuits to redundant equipment shall be physically and electrically independent of each other in accordance with IEEE Std 384-1992™. No provision shall be made for automatically transferring loads from one Class 1E power supply to a redundant supply.

5.2.2.4 Auxiliary devices

Auxiliary devices required for the operation of equipment associated with a load group shall be supplied from a related bus section to prevent the loss of electric power in one load group from causing the loss of equipment function in another load group.

5.2.2.5 Feeders

Feeders between Class 1E power systems and systems located in nonsafety class structures shall be provided with Class 1E circuit breakers located in a safety class structure.

5.2.3 Preferred power supply

The preferred power supply consists of two or more circuits from the transmission system to the Class 1E distribution system. The preferred power supply is not a Class 1E system.

The preferred power supply circuits may be used during all modes of operation to supply power to the Class 1E and non-Class 1E buses of the plant. Each preferred power supply shall be sized to supply the maximum expected coincident Class 1E and non-Class lE steady-state and transient loads.

Refer to IEEE Std 765-1995™ for preferred power supply requirements.

Copyright © 2002 IEEE. All rights reserved.
Copyright The Institute of Electrical and Electronics Engineers, Inc.
Provided by IHS under license with IEEE
No reproduction or networking permitted without license from IHS
Not for Resale

5.2.4 Standby power supply

5.2.4.1 Description

Each standby power supply provides electric energy for the operation of its required safety systems in the absence of the preferred power supply. The standby power supply consists of all components from the stored energy (fuel) to the connection to the distribution system's supply circuit breaker. Such components include the starting systems; the cooling system; the excitation and voltage regulation systems; the local control, protection, and surveillance systems associated with the prime mover; and the generator, etc. Refer to Clause 1 of IEEE Std 387-1995™ for a more detailed listing. In addition, refer to Table 1 of IEEE Std 387-1995™ for design and application considerations for the standby power supply.

5.2.4.2 Capability

Each standby power source shall be capable of energizing or starting and accelerating to rated speed, in the required sequence, all the required safety system loads. For requirements on diesel generators, refer to IEEE Std 387-1995™.

5.2.4.3 Independence

A failure of any component of one standby power source shall not jeopardize the capability of the redundant standby power source(s) to perform their required safety function(s).

Each standby power source shall have provisions for automatic connection to one Class 1E load group, but shall have no automatic connection to any other redundant load group. If nonautomatic interconnecting means are furnished, provisions that prevent paralleling of the redundant standby power sources shall be included.

Consistent with these provisions, automatic and manual control shall be provided to

a) Start the standby power supply.
b) Disconnect appropriate loads from the Class 1E power systems when the standby power supply is required.
c) Connect the standby power supply to the Class 1E distribution system and load.

5.2.4.4 Availability

The standby power supply shall be available following the loss of the preferred power supply within a time consistent with the requirements of the safety function under normal and accident conditions.

5.2.4.5 Energy storage

Stored energy (fuel) at the site shall be of sufficient quantity to operate the standby power supply while supplying post-accident power requirements to a unit for the longer of the following:

— Seven days
— The time required to replenish the energy from sources away from the generating unit's site following the limiting design basis event.

5.2.4.6 Test provisions

Means shall be provided to start and load-test the standby generators while the station is operating as outlined in IEEE Std 387-1995™ in addition to the following:

--`,,`-`-`,,`,,`,`,,`---
Copyright © 2002 IEEE. All rights reserved.

Copyright The Institute of Electrical and Electronics Engineers, Inc.
Provided by IHS under license with IEEE
No reproduction or networking permitted without license from IHS Not for Resale

a) Automatic shutdown devices that are functional only during test shall be identified.
b) Provisions shall be made for automatic transfer from system test mode to operate mode in case of an accident signal.
c) Provisions shall be made to detect loss of offsite power during test when the standby generator is connected to the offsite power source. For additional guidance under these conditions, refer to IEEE Std 741-1997™.

5.3 DC power systems

5.3.1 General

The direct current power systems include power supplies and distribution systems arranged to provide power to the Class 1E direct current loads and for control and switching of the Class 1E power systems. Features such as physical separation, electrical isolation, redundancy, and qualified equipment shall be included in the design to aid in preventing a mechanism by which a single design basis event can cause redundant equipment within the station's Class 1E power system to be inoperable. For guidance, refer to IEEE Std 946-1992™. Design requirements shall include the following:

a) The Class 1E electric loads shall be separated into two or more redundant load groups.
b) The protective actions of each load group shall be independent of the protective actions provided by redundant load groups.
c) Each of the redundant load groups shall have access to a power supply that consists of one or more batteries and one or more battery chargers.
d) Each load group shall have its own battery charger (or chargers) with no automatic interconnecting provision. Two or more chargers may have a common alternating current power supply if the consequences of the loss of the power supply to the load group under design basis conditions are acceptable.
e) The batteries shall have features so that common-cause failures are minimized between redundant batteries. For further guidance, refer to IEEE Std 484-1996™.

5.3.2 Distribution system

5.3.2.1 Description

The distribution system shall consist of all equipment in the distribution circuits from their supply devices to the loads.

5.3.2.2 Capability

Each distribution circuit shall be capable of transmitting sufficient energy to start and operate all required loads in that circuit.

5.3.2.3 Independence

Distribution circuits to redundant equipment shall be physically and electrically independent of each other in accordance with IEEE Std 384-1992™. No provision shall be made for automatically interconnecting redundant load groups. If nonautomatic interconnecting means are furnished, provision shall be included that prevents paralleling of the redundant direct current sources. No provision shall be made for automatically transferring loads between Class 1E power sources.

Copyright © 2002 IEEE. All rights reserved.
Copyright The Institute of Electrical and Electronics Engineers, Inc.
Provided by IHS under license with IEEE
No reproduction or networking permitted without license from IHS
Not for Resale

5.3.2.4 Auxiliary devices

Auxiliary devices that are required to operate dependent equipment shall be supplied from a related bus section to prevent the loss of electric power in one load group from causing the loss of equipment in another load group.

5.3.2.5 Feeders

Feeders between the Class 1E power systems and systems located in nonsafety class structures shall be provided with Class 1E automatic circuit-interrupting devices located in a safety class structure.

5.3.3 Battery supply

5.3.3.1 Description

Each battery supply shall consist of the storage cells, connectors, and its connections to the distribution system supply circuit-interrupting device. (As used in 5.3, the term *battery* refers to one or more batteries that furnish electric energy to one redundant load group).

5.3.3.2 Capability

Each battery supply shall be capable of starting and operating its required steady-state and transient loads. See IEEE Std 485-1997™ for recommendations on sizing batteries.

5.3.3.3 Availability

Each battery supply shall be immediately available during both normal operations and following the loss of power from the alternating current system.

5.3.3.4 Independence

Each battery supply shall be independent of other battery supplies.

5.3.3.5 Stored energy

Stored energy shall be sufficient to provide an adequate source of power for starting and operating all required connected loads and for operating all necessary circuit breakers during an interval of time when either of the following occur:

— Alternating current to the battery charger is lost for the time stated in the design basis, or
— Alternating current to the battery charger has been restored, the battery is being restored to its fully charged state, and power in excess of the capacity of the battery charger is needed.

5.3.3.6 Test provisions

Means shall be provided to perform battery capacity tests in accordance with IEEE Std 450-1995™.

5.3.3.7 Installation

Refer to IEEE Std 484-1996™ for recommended installation design and installation practices for batteries.

Copyright © 2002 IEEE. All rights reserved.

Copyright The Institute of Electrical and Electronics Engineers, Inc.
Provided by IHS under license with IEEE
No reproduction or networking permitted without license from IHS Not for Resale

5.3.4 Battery charger

5.3.4.1 Description

Each battery charger shall include all equipment from its connection to the alternating current system to its distribution system's supply circuit breaker. (As used in 5.3, the term *battery charger* refers to one or more battery chargers that furnish electric energy to one redundant load group).

5.3.4.2 Function

Each battery charger shall furnish electric energy for the steady-state operation of connected loads required during normal and post-accident operation while its battery is returned to or maintained in a fully charged state.

5.3.4.3 Capability

The capacity of each battery charger shall be based on the largest combined demands of the various continuous steady-state loads plus charging capacity to restore the battery after the bounding design basis event discharge to a state that the battery can perform its design basis function for subsequent postulated operational and design basis functions. The time period considered for sizing the charger shall be as stated in the design basis of the plant. IEEE Std 946-1992™ should be reviewed for guidance and recommendations on sizing battery chargers.

5.3.4.4 Independence

Each battery charger shall be independent of other battery chargers except as stated in 5.3.1 d).

5.3.4.5 Disconnecting means

Each battery charger shall have a disconnecting device in its alternating current power incoming feeder and its direct current power output circuit for isolating the charger.

5.3.4.6 Feedback protection

Each battery charger shall be designed to prevent the alternating current power supply from becoming a load on the battery.

5.3.4.7 Transient protection

Provisions shall be made for the battery charger to prevent transients from the alternating current system from unacceptably affecting the direct current system, and vice versa.

5.4 Instrument and control power systems

5.4.1 General

The instrument and control power systems include power supplies and distribution systems arranged to provide alternating current and direct current electric power to the Class 1E Instrumentation and Control loads.

These systems shall be designed to provide a highly reliable source of power to the reactor trip system, engineered safety features, auxiliary supporting features, and other auxiliary features.

Copyright © 2002 IEEE. All rights reserved.
Copyright The Institute of Electrical and Electronics Engineers, Inc.
Provided by IHS under license with IEEE
No reproduction or networking permitted without license from IHS
Not for Resale

Design requirements shall include the following:

a) The Class 1E Instrumentation and Control loads shall be separated into two or more redundant load groups.
b) The protective actions of each load group shall be independent of the protective actions provided by redundant load groups.
c) Two or more independent direct current power supplies shall be provided for instrumentation and control. Within each redundant division, the direct current source may be a common battery for both Class 1E direct current power and instrumentation and control loads.
d) Two or more independent alternating current power supplies shall be provided for instrumentation and control.
e) The sources and effects of harmonics shall be considered.

To accomplish the requirements in this subclause, special power supplies may be required that are isolated from the alternating current and direct current power supplies used for the normal instrumentation and control of the unit(s).

5.4.2 Distribution system

5.4.2.1 Description

The distribution system shall consist of all equipment in the distribution circuits from their supply devices to the loads.

5.4.2.2 Capability

Each distribution circuit shall be capable of transmitting sufficient energy to start and operate all required loads in that circuit.

5.4.2.3 Independence

Distribution circuits to redundant equipment shall be physically and electrically independent of each other in accordance with IEEE Std 384-1992™. No provision shall be made for automatically interconnecting redundant load groups. If nonautomatic interconnecting means are furnished, provision shall be included that prevents paralleling of the redundant instrument and control power system sources. No provision shall be made for automatically transferring instrumentation and control loads between redundant power sources.

5.4.2.4 Auxiliary devices

Auxiliary devices that are required to operate dependent equipment shall be supplied from a related bus section to prevent the loss of electric power in one load group from causing the loss of equipment in another load group.

5.4.3 Battery supply

Refer to 5.3.3 for battery supply requirements.

5.4.4 Battery charger

Refer to 5.3.4 for battery charger requirements.

--`,,`-`-`,,`,,`,`,,`---

Copyright © 2002 IEEE. All rights reserved.

Copyright The Institute of Electrical and Electronics Engineers, Inc.
Provided by IHS under license with IEEE
No reproduction or networking permitted without license from IHS Not for Resale

5.4.5 Alternating current supply

5.4.5.1 Description

Each redundant instrument and control power system alternating current supply shall consist of the power supply (e.g., uninterruptible power supply, inverter, transformer, etc.) and its connections to the distribution supply circuit-interrupting device.

5.4.5.2 Capability

The capacity of each redundant instrument and control power system alternating current supply shall be based on the largest combined demands of the various continuous loads plus the largest combination of noncontinuous loads that would likely be connected to the bus simultaneously during normal or accident plant operation, whichever is higher.

5.4.5.3 Independence

Each instrument and control power system alternating current supply shall be electrically and physically independent of other redundant load group instrument and control power system alternating current supplies.

5.4.5.4 Surveillance

Indicators shall be provided to monitor the status of the instrument and control power system alternating current supply. This instrumentation shall include indication of the following:

— Output voltage
— Output current
— Circuit breaker/fuse status
— Frequency

5.5 Execute features

5.5.1 General

The execute features are illustrated in Table 1 and Figure 3. They shall include actuation devices, interconnecting wire and cabling, and actuated equipment that utilize electric power to provide actions when signals are received from the sense and command features. The execute features are subject to the Execute Features Functional and Design Requirements stated in Clause 7 of IEEE Std 603-1998™ and the supplementary requirements given in 5.5.2.

5.5.2 Manual control

If manual control of any actuated equipment in the execute features is required, the features necessary to accomplish such manual control shall

— Be Class 1E.
— Meet the requirements of 5.5.1.
— Be shown by analysis not to defeat the requirements of 6.2 and 7.2 of IEEE Std 603-1998™ concerning manual initiation.

Copyright © 2002 IEEE. All rights reserved.
Copyright The Institute of Electrical and Electronics Engineers, Inc.
Provided by IHS under license with IEEE
No reproduction or networking permitted without license from IHS
Not for Resale

5.6 Sense and command features

5.6.1 General

The sense and command features are subject to the Sense and Command Features Functional and Design Requirements stated in Clause 6 of IEEE Std 603-1998™.

5.6.2 Protective devices

Protective devices shall be provided for the actuated equipment of the execute features to limit degradation of the Class 1E actuated equipment. Sufficient indication shall be provided to identify the actuation of the protective device. Where application of the protective devices can prevent completion of a safety function, they may be omitted (or bypassed), provided such omission does not degrade the Class 1E power system below an acceptable level.

In general, the safety functions of the safety system do not include the safety functions normally associated with circuit and equipment fault protection.

6. Surveillance and test requirements

6.1 Surveillance methods

Operational status information shall be provided for Class 1E power systems. The extent, selection, and application of the various surveillance methods, including periodic testing, to indicate the operational status of Class 1E power systems depend on individual plant design requirements. Illustrative surveillance methods for Class 1E equipment are outlined in Table 3.

Table 3—Illustrative surveillance methods

Equipment—Class 1E	Parameter	Illustrative surveillance methods				
		By continuous monitoring				By periodic tests
		INST	IND LTS	ANN	COMP	
Diesel generator	Auxiliary systems	o	o	xo		*
	Voltage	xo			x	
	Frequency	xo			x	
	Current	xo			x	
	Power factor	xo				
	Power	xo				
	Reactive power	xo				
	Winding temperature				x	
	Field current	xo				
	Field voltages	xo				

Copyright © 2002 IEEE. All rights reserved.

Copyright The Institute of Electrical and Electronics Engineers, Inc.
Provided by IHS under license with IEEE
No reproduction or networking permitted without license from IHS
Not for Resale

Table 3—Illustrative surveillance methods *(continued)*

Equipment—Class 1E	Parameter	Illustrative surveillance methods				
		By continuous monitoring				By periodic tests
		INST	IND LTS	ANN	COMP	
Diesel Generator (Cont'd)	Ground			xo		
	Control voltage			xo		
	Starting capability					*
	Loading capability					*
	Breaker position		xo	x	x	*
	Protective relay			x		*
Switchgear bus	Voltage	xo			x	
	Incoming current	xo			x	
	Ground			x		
	Supply breaker position		xo	x	x	*
	Control voltage			x		
	Protective relay			x		*
Station battery	Current	o				
	Breaker open			x		
	Test breaker closed			x		
Battery charger	Output voltage	o		x		
	Current (output)	o				
	Direct current power failure			x		
	Alternating current power failure			x		
	Breaker open			x		
	High direct current voltage relay (Opens main alternating current supply breaker)					

Copyright © 2002 IEEE. All rights reserved.
Copyright The Institute of Electrical and Electronics Engineers, Inc.
Provided by IHS under license with IEEE
No reproduction or networking permitted without license from IHS
Not for Resale

Table 3—Illustrative surveillance methods *(continued)*

Equipment—Class 1E	Parameter	Illustrative surveillance methods				
		By continuous monitoring				By periodic tests
		INST	IND LTS	ANN	COMP	
Direct current bus	Voltage	xo		x		
	Ground	o		x		
	Cross tie breaker closed			x		
Instrument and Control Power System	Voltage	o				
	Current	o				
	Breaker/fuse status			x		
	Power quality (e.g., Total Harmonic Distortion)					*

KEY:
INST Instrumentation
IND LTS Indicating lights
ANN Annunciator
COMP Computer
x Denotes methods in the main control room.
o Denotes methods outside the main control room.
* Periodic test is supplementary or an alternative to continuous surveillance as indicated.

Class 1E power systems required to be controlled from outside the main control room shall also have operational status information provided outside the main control room (e.g., at the equipment itself, at its power supply, at an alternate location).

The operator shall be provided with accurate, complete, and timely information pertinent to the status of the execute features. This information shall be provided in the main control room and shall include indication of protective actions and unavailability of execute features.

6.2 Preoperational equipment tests and inspections

Preoperation equipment tests and inspections shall be performed with all components installed and all meters and protective devices calibrated and adjusted. They shall demonstrate that

a) All components are correct and are properly installed.
b) All connections are correct and the circuits are continuous.
c) All components are operational.
d) All redundant elements can be tested independently of each other.

Copyright © 2002 IEEE. All rights reserved.

Copyright The Institute of Electrical and Electronics Engineers, Inc.
Provided by IHS under license with IEEE
No reproduction or networking permitted without license from IHS
Not for Resale

6.3 Preoperational system test

The preoperational system tests shall be performed with all components installed. These tests shall demonstrate that the equipment operates within design limits and that the system is operational and can meet its performance specification. These tests shall be performed after the preoperational equipment tests and shall demonstrate that

a) All required coincident Class 1E and non-Class 1E loads can operate acceptably on the preferred power supply.
b) The loss of the preferred power supply can be detected.
c) Each standby power supply can be started and can accept its design load within the time specified in the design basis while maintaining acceptable voltage regulation.
d) The redundant Class 1E sources and their associated load groups are each independent of all other sources.
e) Transfer between preferred and standby power supplies can be accomplished.
f) The batteries of the direct current power supply can meet the design requirements of their connected load without the charger(s) in operation.
g) Each battery charger has sufficient capacity to meet the largest combined demands of the various continuous steady-state loads plus the charging capacity to restore the battery from the design minimum charge state to the fully charged state within the time stated in the design basis.

For further guidance in the performance of these tests, refer to IEEE Std 415-1986™.

6.4 Periodic tests

Tests shall be performed at scheduled intervals to

— Detect within practical limits the deterioration of the equipment toward an unacceptable condition.
— Demonstrate that standby power equipment and other components that are not exercised during normal operation of the station are operable.

The testing of Class 1E equipment shall be scheduled to ensure that sufficient equipment is available at all times to fulfill the safety function.

The periodic tests shall be performed at scheduled intervals in accordance with IEEE Std 338-1987™.

7. Multiunit station considerations

A multiunit station may share Class 1E power systems among individual units if it also complies with criteria given in this clause.

7.1 Criteria

7.1.1 Constraints

Shared Class 1E power systems are permissible in multiunit stations provided the following are met:

a) Minimum engineered safety features are available for each design basis event. Sharing Class 1E power systems shall not impair the ability to perform required safety functions.
b) It is demonstrated that design basis events occurring in one unit do not impair the ability to perform required safety functions in the other units.

Copyright © 2002 IEEE. All rights reserved.
Copyright The Institute of Electrical and Electronics Engineers, Inc.
Provided by IHS under license with IEEE
No reproduction or networking permitted without license from IHS
Not for Resale

7.1.2 Independence

Provisions shall be included in the design to ensure that single failures or transients within one unit will not adversely affect, or propagate to, the other unit(s) and thereby prevent the shared systems from performing the required safety functions.

7.1.3 Single failure

Concurrent single failures in the individual units or a single failure in the shared system shall be assumed as part of the design basis to meet the requirements of 7.1.2.

7.2 Standby power supply capacity

The shared standby power supply capacity shall be sufficient to operate all safety systems required for a design basis event in one unit concurrent with a spurious signal demanding safety system operation in the other unit(s) or safe shutdown of the other unit(s).

7.3 Battery supply

Class 1E direct current systems shall not be shared in multiunit stations unless it can be shown that such sharing will not impair their ability to perform their safety function.

8. Documentation

8.1 Design documentation records

Information, analyses, and computations supporting design of the Class 1E power systems shall be documented and controlled in accordance with the quality records system established for the plant. Documentation records should be prepared to support the design of individual system features or functions. Each design documentation record should be verified in accordance with the requirements of Part I of ASME NQA-1-1997 and should include enough information to allow further independent checking or review.

The following information and studies should be included, as a minimum, in the documentation supporting design of the Class 1E power systems:

a) Steady-state load and voltage profile studies that show the voltages throughout the power system for various modes of plant operation, including design basis events, at the time of normal and degraded voltage conditions.
b) Transient load and voltage studies that show the profile of the loads that are sequentially applied to the preferred and standby power supplies during various modes of plant operation, including design basis events.
c) An instrument and control power system study that examines loading and voltages in the alternating current and direct current systems for postulated design basis conditions.
d) Protective device coordination and equipment protection studies that show proper setpoint selection in all of the protective schemes.
e) A bus transfer study that analyzes the impact of voltage, phase angle, and frequency on buses and motors before, during, and immediately after automatic bus transfers.
f) Short-circuit studies to determine the maximum fault currents throughout the power system for various modes of plant operation, including design basis events, to be used to analyze the withstand and fault clearing capability of the electrical equipment.
g) Equipment sizing to ensure that the electrical equipment has been properly applied.

Copyright © 2002 IEEE. All rights reserved.

Copyright The Institute of Electrical and Electronics Engineers, Inc.
Provided by IHS under license with IEEE
No reproduction or networking permitted without license from IHS Not for Resale

8.2 Verification and validation

Class 1E power systems that utilize programmable digital computer systems shall be in compliance with IEEE Std 7-4.3.2-1993™.

8.3 Test records

Records of periodic tests performed on devices or in a preoperational test program should include the following:

a) Test description
b) Description and identification of test equipment
c) Test prerequisites
d) Environmental conditions (where environmental condition testing is necessary to ensure proper operation)
e) Conditions of device prior to test
f) Abnormal alignment
g) Comparison of test results against expected results
h) Identification of conditions or results different than anticipated conditions or results
i) Corrective actions when required
j) Evaluation of test results

Copyright © 2002 IEEE. All rights reserved.
Copyright The Institute of Electrical and Electronics Engineers, Inc.
Provided by IHS under license with IEEE
No reproduction or networking permitted without license from IHS
Not for Resale