IEEE Std 301-1988
(Revision of ANSI/IEEE Std 301-1976)

IEEE Standard Test Procedures for Amplifiers and Preamplifiers used with Detectors of Ionizing Radiation

Sponsor
Nuclear Instruments and Detectors Committee
of the
IEEE Nuclear and Plasma Sciences Society

Approved October 20, 1988
IEEE Standards Board

Approved June 21, 1989
American National Standards Institute

© Copyright 1989 by

The Institute of Electrical and Electronics Engineers, Inc

345 East 47th Street, New York, NY, USA

No part of this publication may be reproduced in any form, in an electronic retrieval system or otherwise, without the prior written permission of the publisher.

Copyright The Institute of Electrical and Electronics Engineers, Inc.
Provided by IHS under license with IEEE
No reproduction or networking permitted without license from IHS
Not for Resale

IEEE Standards documents are developed within the Technical Committees of the IEEE Societies and the Standards Coordinating Committees of the IEEE Standards Board. Members of the committees serve voluntarily and without compensation. They are not necessarily members of the Institute. The standards developed within IEEE represent a consensus of the broad expertise on the subject within the Institute as well as those activities outside of IEEE which have expressed an interest in participating in the development of the standard.

Use of an IEEE Standard is wholly voluntary. The existence of an IEEE Standard does not imply that there are no other ways to produce, test, measure, purchase, market, or provide other goods and services related to the scope of the IEEE Standard. Furthermore, the viewpoint expressed at the time a standard is approved and issued is subject to change brought about through developments in the state of the art and comments received from users of the standard. Every IEEE Standard is subjected to review at least every five years for revision or reaffirmation. When a document is more than five years old, and has not been reaffirmed, it is reasonable to conclude that its contents, although still of some value, do not wholly reflect the present state of the art. Users are cautioned to check to determine that they have the latest edition of any IEEE Standard.

Comments for revision of IEEE Standards are welcome from any interested party, regardless of membership affiliation with IEEE. Suggestions for changes in documents should be in the form of a proposed change of text, together with appropriate supporting comments.

Interpretations: Occasionally questions may arise regarding the meaning of portions of standards as they relate to specific applications. When the need for interpretations is brought to the attention of IEEE, the Institute will initiate action to prepare appropriate responses. Since IEEE Standards represent a consensus of all concerned interests, it is important to ensure that any interpretation has also received the concurrence of a balance of interests. For this reason IEEE and the members of its technical committees are not able to provide an instant response to interpretation requests except in those cases where the matter has previously received formal consideration.

Comments on standards and requests for interpretations should be addressed to:

Secretary, IEEE Standards Board
345 East 47th Street
New York, NY 10017
USA

IEEE Standards documents are adopted by the Institute of Electrical and Electronics Engineers without regard to whether their adoption may involve patents on articles, materials, or processes. Such adoption does not assume any liability to any patent owner, nor does it assume any obligation whatever to parties adopting the standards documents.

Copyright The Institute of Electrical and Electronics Engineers, Inc.
Provided by IHS under license with IEEE
No reproduction or networking permitted without license from IHS
Not for Resale

Foreword

(This Foreword is not a part of IEEE Std 301-1988, IEEE Standard Test Procedures for Amplifiers and Preamplifiers used with Detectors of Ionizing Radiation.)

This standard describes test procedures for amplifiers and preamplifiers that are used with semiconductor, scintillation, and proportional detectors in the spectrometry of ionizing radiation. It supersedes ANSI/IEEE Std 301-1976, IEEE Standard Test Procedures for Amplifiers and Preamplifiers for Semiconductor Radiation Detectors for Ionizing Radiation. The title was changed because the same amplifiers used for semiconductor detectors are applicable to other types.

Amplifier technology has progressed to the point where the spectrometer performance may be limited as much by the multichannel analyzer (MCA) as by the amplifier. Because of this and because of the impracticality of standardizing on one MCA with so many on the market, MCAs, with minor exceptions, are not a part of the measurement procedure in this publication.

In this standard, measuring procedures are given in greater detail than in the earlier publication because with modern amplifiers, perceived performance often depends on the details of measurement. Thus, many of the details of the procedures must be standardized as well as the amplifier specifications.

Tests that are specific to amplifiers with time-variant pulse-shaping filters are not included in this standard, nor are tests for pile-up rejectors. Time-variant filters allow shorter pulse-shaping times than linear filters for the same signal-to-noise ratio (snr), and pile-up rejectors, as the name implies, block pulses that overlap earlier ones, allowing higher count rates for a given spectral-line resolution. Both techniques have the greatest application at the energy extremes: at very low energies because wide pulses must be used to optimize the snr, and at high energies where detector artifacts cause low-side tailing of spectrum lines. The tailing obscures low-intensity lines falling just below higher energy lines, and pile-up causes phantom peaks to appear at energy multiples of the spectrum lines.

In this standard, $t_{0.5}$ or $t_{1/2}$ (the pulse width at 50% of peak amplitude) is the main-amplifier indicator of shaping time because this parameter best enables a performance comparison among different amplifiers. Also, compared with other parameters, this one is the easiest to measure accurately with an oscilloscope and pulse generator.

Companions to this document are ANSI/IEEE Std 300-1988 [1],[1] ANSI/IEEE Std 325-1986 [2], and IEEE Std 194-1977 [3].

At the time it approved this standard, the Nuclear Instruments and Detectors Committee of the IEEE Nuclear and Plasma Sciences Society had the following membership:

Sanford Wagner, *Chair*
Louis Costrell, *Secretary*

Muzaffer Atac	Edward Fairstein*	D. E. Persyk
J. G. Bellian	F. S. Goulding	P. L. Phelps
J. A. Coleman	R. M. Keyser	D. E. Stilwell
D. C. Cook	F. A. Kirsten	K. L. Swinth
J. F. Detko	H. W. Kraner	F. J. Walter
	G. L. Miller	

*Served as project leader for the development of this standard.

[1]The numbers in brackets correspond to those of the references listed in 1.5.

Copyright The Institute of Electrical and Electronics Engineers, Inc.
Provided by IHS under license with IEEE
No reproduction or networking permitted without license from IHS
Not for Resale

At the time it approved this standard, the Accredited Standards Committee N42 on Radiation Instrumentation had the following members:

Louis Costrell, *Chair*
Fred Huber, *Admin Secretary*

American Conference of Governmental Industrial Hygienists ..... Jesse Lieberman
Health Physics Society ..... J. B. Horner Kuper
J. M. Selby (*Alt*)
Institute of Electrical and Electronics Engineers ..... Louis Costrell
D. C. Cook (*Alt*)
A. J. Spurgin (*Alt*)
J. Forster (*Alt*)
Lawrence Berkeley Laboratory ..... L. J. Wagner
Nuclear Suppliers Association ..... K. F. Sinclair
Oak Ridge National Laboratory ..... H. R. Brashear
UCLA Center for the Health Sciences ..... J. E. McLaughlin
US Nuclear Regulatory Commission ..... E. C. Wenzinger
US Department of Energy ..... Gerald Goldstein
US Department of the Army, Materiel Command ..... Edward Groeber
US Department of the Army, Office of Civil Defense Mobilization Earl ..... R. Siebentritt, Jr
US Department of Commerce, National Bureau of Standards ..... Louis Costrell
Members-at-Large ..... J. G. Bellian
David C. Cook
John M. Gallagher, Jr
D. A. Mack
E. J. Vallario

The following persons were on the balloting committee that approved this document for submission to the IEEE Standards Board:

A. Atac	E. Fairstein	D. E. Persyk
J. G. Bellian	F. S. Goulding	P. L. Phelps
J. A. Coleman	R. Keyser	D. E. Stilwell
D. C. Cook	F. A. Kirsten	K. L. Swinth
L. Costrell	H. W. Kraner	S. Wagner
J. Detko	G. L. Miller	F. J. Walter

When the IEEE Standards Board approved this standard on October 20, 1988, it had the following membership:

Donald C. Fleckenstein, *Chair*
Marco Migliaro, *Vice Chair*
Andrew G. Salem, *Secretary*

Arthur A. Blaisdell	John W. Horch	L. Bruce McClung
Fletcher J. Buckley	Jack M. Kinn	Donald T. Michael*
James M. Daly	Frank D. Kirschner	Richard E. Mosher
Stephen R. Dillon	Frank C. Kitzantides	L. John Rankine
Eugene P. Fogarty	Joseph L. Koepfinger *	Gary S. Robinson
Jay Forster*	Irving Kolodny	Frank L. Rose
Thomas L. Hannah	Edward Lohse	Helen M. Wood
Kenneth D. Hendrix	John E. May, Jr	Karl H. Zaininger
Theodore W. Hissey, Jr	Lawrence V. McCall	Donald W. Zipse

*Member Emeritus

Copyright The Institute of Electrical and Electronics Engineers, Inc.
Provided by IHS under license with IEEE
No reproduction or networking permitted without license from IHS
Not for Resale

CLAUSE PAGE

1. General 1

1.1 Scope and Object 1
1.2 Specialized Definitions 2
1.3 Symbols and Abbreviations 6
1.4 Constants and Conversion Factors 7
1.5 References 7

2. Spectrometer 8

2.1 Detectors 8
2.2 Preamplifier 9
2.3 Main Amplifier (Shaping Amplifier) 10
2.4 Biased Amplifier 11
2.5 Multichannel Analyzer 11

3. Test Instruments 11

3.1 Test Setup 11
3.2 Pulse Generators 12
3.3 Step Attenuator 13
3.4 Capacitor Box 14
3.5 Shaping Amplifier 14
3.6 AC Voltmeter 14
3.7 Oscilloscope 14
3.8 Nonlinearity Bridge 14
3.9 Oscilloscope/Generator Calibration 15

4. Main-Amplifier Measurements and Specifications 16

4.1 Pulse-Shape Parameters 16
4.2 Pulse Width 17
4.3 Overload Recovery 18
4.4 Gain-Control Calibration and Main-Amplifier Gain 19
4.5 Noise, Main Amplifiers 20
4.6 Noise Transition Gain 21
4.7 Pole/Zero Range 21
4.8 Nonlinearity 21
4.9 Source Resistance 22
4.10 Temperature Sensitivity 24
4.11 Supply-Voltage Sensitivity 24
4.12 Crossover Walk 24

5. Preamplifier Measurements 25

5.1 Measurement of Charge Sensitivity 25
5.2 Size of the Internal Test Capacitor 26
5.3 Rise Time vs Capacitance 26
5.4 Noise, Preamplifiers 26
5.5 Preamplifier Nonlinearity 28
5.6 Energy × Count-Rate Product (ECRP) 29

Copyright The Institute of Electrical and Electronics Engineers, Inc.
Provided by IHS under license with IEEE
No reproduction or networking permitted without license from IHS Not for Resale

CLAUSE PAGE

6. Biased Amplifier Measurements....32

6.1 Nonlinearity, Biased Amplifier.... 32

7. BIBLIOGRAPHY....34

Annex A (Informative)....34

Copyright The Institute of Electrical and Electronics Engineers, Inc.
Provided by IHS under license with IEEE
No reproduction or networking permitted without license from IHS Not for Resale

IEEE Standard Test Procedures for Amplifiers and Preamplifiers used with Detectors of Ionizing Radiation

1. General

1.1 Scope and Object

These test procedures cover amplifier and preamplifier systems with linear pulse-shaping networks for use with semiconductor, scintillation, and proportional detectors in the spectroscopy of ionizing radiation. The object is to provide a common language and methodology for users and manufacturers of pulse-amplifier systems.

This standard supersedes IEEE Std 301-1976, IEEE Standard Test Procedures for Amplifiers and Preamplifiers for Semiconductor Radiation Detectors for Ionizing Radiation. Test procedures for associated detectors are described in ANSI/IEEE Std 300-1988 [1] and ANSI/IEEE Std 325-1986 [2]. IEEE Std 194-1977 [3] is a companion document for pulse-shape terminology.

Not all of the tests described herein are mandatory, but those that are performed to determine preamplifier and amplifier specifications shall conform to this standard.

The emphasis on the methods of measurement is to enhance sensitivity and improve accuracy by working around the limitations of the test instruments, particularly oscilloscopes that have only a visual display for readout. A null technique is used where possible, thereby reducing basic errors to the inaccuracy of a pair of precision resistors. When use of a bridge is inappropriate, such as in measurements of pulse height with an oscilloscope, the pulse is made to occupy a fixed amplitude and vertical position on the face of the cathode-ray tube (CRT). Some measurements require test instruments or fixtures not commercially available at this writing; circuit diagrams for their construction are given in the Appendix. It is not acceptable to make use of a standard nuclear instrument module to test the performance of an amplifier unless the errors introduced by that module can be corrected for or shown to be less than the error caused by the amplifier. Examples are the use of a crossover-pickoff module to measure crossover walk in a bipolar amplifier, and an MCA to measure nonlinearity and noise.

Copyright © 1989 IEEE All Rights Reserved

Copyright The Institute of Electrical and Electronics Engineers, Inc.
Provided by IHS under license with IEEE
No reproduction or networking permitted without license from IHS
Not for Resale

1.2 Specialized Definitions

Definitions followed with the reference IEEE Std 194-1977 [3] include terms defined in that standard. The following definitions should be understood throughout the document:

back porch: At the end of a shaped pulse, a region where the tail may stop several percent short of the baseline, then decay to it slowly.

back termination, back-terminating resistor: A resistor joining the output stage of an amplifier or signal generator to its output connector.

bandwidth (of a voltmeter): The band of frequencies over which the ac voltmeter indication is constant within ±0.25 dB, rolling off 3 dB at the ends. The bandwidth is defined as the difference between the high and low frequencies at which the -3 dB points occur.

ballistic deficit: In an amplifier, the loss in pulse height that occurs when the rise time of the input signal is not negligible compared with the width of the shaped amplifier pulse.

baseline: The average of the levels from which a pulse departs and to which it returns in the absence of a following overlapping pulse (see IEEE Std 194-1977 [3]).

baseline shift: A phenomenon in which the baseline changes as the duty cycle increases from zero. (Usually, the shift is opposite in polarity to that of the signal.)

baseline restorer: A circuit that rapidly restores the baseline following an amplifier's output pulse (or series of pulses) to the level existing prior to it.

bias: (1) In a biased amplifier, the applied threshold voltage (or current) below which the gain is zero. (2) In a detector, the electric field that causes charge to be collected.

biased amplifier: An amplifier giving zero output for input signals below an adjustable threshold and having a constant gain above that threshold up to a specified maximum output.

bias resistor (detector): The resistor through which the voltage providing the bias is applied to a detector. The bias resistor may also be the load resistor (see load resistor).

bipolar pulse: A pulse having two lobes on opposite sides of the baseline. Such a pulse is obtained by including a second differentiator in the unipolar pulse-shaping network of an amplifier.

blocked: A situation in which amplifier gain is reduced to zero for longer than a normal pulse width by a heavily-overloading signal.

buck: Balancing two opposite-polarity signals against each other to produce a null.

buffer: A circuit interposed between a signal source and its load to prevent undesired interaction between the two.

capacitance, cold input: The capacitance measured between the input terminals of a preamplifier with all dc voltages applied but with the signal path inactivated.

capacitance, detector: The small-signal capacitance measured between the terminals of a detector under specified conditions of bias and frequency.

capacitance, hot input: The capacitance measured between the input terminals of a working preamplifier.

Copyright © 1989 IEEE All Rights Reserved

Copyright The Institute of Electrical and Electronics Engineers, Inc.
Provided by IHS under license with IEEE
No reproduction or networking permitted without license from IHS Not for Resale

characteristic resistance (impedance): The internal resistance (impedance) of a network (such as a coaxial cable or an attenuator). When terminated in that same resistance (impedance), signal reflections are avoided and the output signal is halved.

charge-sensitive preamplifier: A preamplifier in which the output signal is proportional to input charge, independent of input capacitance.

clip, clipping: A limiting operation such as (1) the use of a high-pass filter (differentiator) or (2) a nonlinear operation to limit the amplitude of a pulse. The first usage is archaic.

collection time: In a detector, the time required for the integrated current following the occurrence of an ionizing event to increase from 10 % to 90 % of its final value.

crest factor (in an ac voltmeter): The highest ratio of peak to rms voltage that an ac voltmeter can tolerate before overload sets in. The crest factor may depend on the full-scale setting.

crossover time: The instant at which the trailing edge of the primary lobe of a bipolar pulse passes through a designated level (usually the baseline).

$(CR)^m$-$(RC)^n$ network: A shaping network comprising m differentiators and n integrators, all of the same time constant. If $m = 1$, the pulse shape is unipolar and its response to a step function is $K(t/\tau)^n e^{-t/\tau}$. This network is one of the class of quasi-Gaussian shaping networks.

decay time (last transition time): The time required for a pulse to decay from 90% of its peak value to 10% unless otherwise specified (see IEEE Std 194-1977 [1]).

decay time constant: With a pulse that decays with a single exponential waveform, the time required for it to decay to $1/e$ of any selected level on the asymptote of the last transition (see IEEE Std 194-1977 [1]).

decibel (dB): Twenty times the logarithm (to the base 10) of the ratio of two voltages. For example, if an ac voltmeter indicates 7.07 V at some frequency f_h, but 10.0 V at a reference frequency f_{ref}, its indication at f_h, is said to be 20 log 10 (7.07/10.0) = -3 dB (or “3 dB down”) with respect to that at f_{ref}.

differential nonlinearity: The change in incremental gain over the dynamic range of an amplifier, usually expressed as a percentage of a reference gain.

differentiator: A high-pass network usually comprising a capacitor and a resistor for the purpose of reducing the duration of a signal and the response to low frequencies.

duty cycle: In a train of pulses, the ratio of pulse width measured at a defined level to the mean spacing between pulses measured at that same level. Unless otherwise specified, 1% of the average pulse height is the defined level.

duty factor: See duty cycle.

dynamic range: The range of signal heights over which an amplifier gives nominally linear response.

equivalent input noise: In an amplifier, the output noise signal divided by the amplifier gain.

equivalent noise resistance, series noise: In a hypothetically noise-free amplifier, that resistance which, when connected between the signal source and the amplifier, will produce the observed output noise. This definition applies only to noise with a constant spectral density (white noise).

Copyright © 1989 IEEE All Rights Reserved

Copyright The Institute of Electrical and Electronics Engineers, Inc.
Provided by IHS under license with IEEE
No reproduction or networking permitted without license from IHS Not for Resale

equivalent noise resistance, parallel noise: In a hypothetically noise-free amplifier, that resistance which, when placed across the input terminals of the amplifier, will produce the observed output noise. This definition applies only to noise with a constant spectral density (white noise).

fall time: See **decay time.**

gain (amplifier): The ratio of nominal peak output pulse height to nominal peak input pulse height (see **nominal**).

high-pass network: A network that nominally passes all frequencies above a transition frequency $f = 1/2\pi\tau$ (see **differentiator**).

hum: An interfering signal at the power-line frequency or harmonic thereof.

integrator: (1) In a pulse shaper, a low-pass section of the filter network. (2) A circuit in which the output signal is the mathematical integral of the input signal.

integral nonlinearity (percent): The departure from linear response expressed as a percentage of the rated output pulse amplitude.

load resistor (detector): When the detector is coupled to the preamplifier through a capacitor, the load resistor connects the bias supply to the junction of the detector and the capacitor. In this instance, the load resistor constitutes all or part of the bias resistor.

low-pass network: A network that nominally passes all frequencies below $f = 1/2\pi\tau$ (see **integrator**).

main amplifier: In an amplifier system, the amplifier that usually follows the preamplifier and that contains the system's pulse-shaping filter.

noise transition gain: In a main amplifier, the gain setting below which the output noise is nearly independent of that setting and above which the output noise is nearly proportional to it.

noise line width: The width of a spectral line obtained by substituting a noise-free electrical pulse for the signal generated by a radioactive source.

nominal: Relating to an idealized pulse shape or to some other idealized characteristic.

offset: DC shift from a defined voltage (current) level. Unless otherwise stated, the defined level is the baseline.

overshoot: The region immediately following the first transition (of a signal) that exceeds the nominal value of that signal (see IEEE Std 194-1977 [3]).

peaking time (shaped pulse): The time interval between the 1% point on the first transition an d the top center line (see IEEE Std 194-1977 [3]).

pole-zero cancellation: A technique for eliminating from a nominal unipolar pulse, an undesired undershoot, usually caused by the decay time constant of a preamplifier.

preamplifier: In an amplifier system, the amplifier section physically attached to or located close to the detector.

primary lobe: The first lobe of a bipolar pulse.

quasi-Gaussian: The description of a signal shape (or the electrical network that produces it) which approximates that of a normal distribution. In this standard, unless otherwise stated, the term refers to a pulse shape produced by one differentiator in conjunction with four or more integrators. See **differentiator** and **integrator**.

Copyright © 1989 IEEE All Rights Reserved

Copyright The Institute of Electrical and Electronics Engineers, Inc.
Provided by IHS under license with IEEE
No reproduction or networking permitted without license from IHS Not for Resale

rectangular pulse: A flat-topped pulse, usually with transitions short compared with the duration of the top (see IEEE Std 194-1977 [3]).

resolution (energy): Unless otherwise specified, the full width at half maximum (FWHM) of a spectrum peak expressed as an increment of energy ΔE or as a percentage of the energy of the peak, $100\Delta E/E$. FWHM of a normal distribution is $2\sqrt{(2\ln 2)} = 2.355$ times the standard distribution σ. The root-mean-square value and σ are synonymous.

resolving time (in an amplifier system): The closest spacing between two shaped pulses that permits them to be counted separately. Unless otherwise specified, the resolving time is defined as $t_{.01}$ (see $t_{.01}$, 1.3).

ringing: A damped oscillation which may exist immediately following a pulse transition (see IEEE Std 194-1977 [3]).

rise time (first transition time): Unless otherwise specified, the time required for a signal to increase from 10% to 90% of its final value (see IEEE Std 194-1977 [3]).

sag (of a pulse): A slow decay of a nominally fiat-topped pulse. When a tail pulse is examined with an oscilloscope set for a sweep time short compared with the fall time of the pulse, the observed decay can be considered as sag.

secondary lobe: The second lobe of a bipolar pulse.

settling time (pulse): The time required for a pulse to equilibrate to a specified percentage of its amplitude.

shaping amplifier: See main amplifier.

shaping index: An indicator of shaped pulse width defined as the width at 50% of peak height and symbolized as $t_{1/2}$ or $t_{0.5}$.

shaping network: A combination of a high-pass network (one or two differentiators) with a low-pass network (several integrators) to reduce the width of a preamplifier output signal, thereby improving its resolving time and signal-to-noise ratio.

sine^n or **sin^n network:** A type of shaping network that transforms a step function to the waveform described by $V = Ke^{-at/\tau}\sin^n t/\tau$. This is one of the class of quasi-Gaussian shaping networks.

slew rate: The greatest rate of change of voltage (usually, volts per microseconds) that an amplifier stage can produce.

source resistance: The internal resistance of an amplifier or signal generator seen by the back-terminating resistor or, if none is used, seen by the external load.

spectrum, pulse height: A distribution of the number of pulses falling within a pulse-height increment as a function of pulse height.

spectrum, radiation: A distribution of the number of ionizing events (intensity) falling within an energy increment as a function of energy.

step function: A waveform characterized by a rapid rise to a level that remains constant thereafter.

tail pulse: A pulse shape characterized by a rapid rise followed by an exponential decay long compared with the rise time.

termination, terminating resistor: The resistor connected across a cable or across the output of an amplifier or signal generator: (With a connecting cable, the purpose usually is to eliminate signal reflections at the ends.)

transition (pulse): The region of change between the baseline and the peak or vice versa (see IEEE Std 194-1977 [3]).

Copyright © 1989 IEEE All Rights Reserved

Copyright The Institute of Electrical and Electronics Engineers, Inc.
Provided by IHS under license with IEEE
No reproduction or networking permitted without license from IHS
Not for Resale

undershoot: The tail end of a pulse which crosses the baseline to produce a signal opposite in polarity to the preceding portion. An ideal unipolar pulse decays monotonically to the baseline; a bipolar pulse is an example of one with an extreme undershoot.

unipolar pulse: A signal nominally having a single lobe above (or below) the baseline.

voltage-sensitive preamplifier: A preamplifier in which the output signal is proportional to the input voltage.

walk: The change in a timing point that occurs when the pulse height changes.

1.3 Symbols and Abbreviations

A	amplifier gain
A_{br}	gain of nonlinearity-bridge amplifier
A_T	noise transition gain
ADC	analog-to-digital converter
BLR	baseline restorer
BA	biased amplifier
BW	bandwidth
C	coulomb
C	electrical capacitance
C_c	calibrated capacitor used to couple a pulse generator to a preamplifier
C_d	detector capacitance
C_f	feedback capacitor in a charge-sensitive preamplifier
C_t	capacitor connected across the input of a preamplifier to determine the effect on performance
c/s	counts per second
CRT	cathode-ray tube
°C	degrees Celsius
Δ	incremental change
ΔV_{br}	bridge output voltage (at null, ΔV_{br} =0)
dB	decibel(s)
div	minor division. On an oscilloscope graticule, 5 div usually equals 1 DIV
DIV	major division on an oscilloscope graticule
DVM	digital voltmeter
E	energy of a particle or photon
e, exp	base of natural logarithms
ε	average energy required to form one ion pair
e_n	rms noise voltage
e_{ni}	equivalent rms noise voltage referred to the input of an amplifier or preamplifier
e_{no}	rms noise voltage at the output of an amplifier
FET	field-effect transistor
FWHM	full width at half maximum
FW.1M	full width at one-tenth maximum. FWTM shall not be used for this abbreviation
FW.01M	full width at one one-hundredth maximum
Hz	hertz
[par]	in parallel with
|x|	absolute value of x (x may be any numeral)
kc/s	kilocounts per second
K	(1) kelvin (unit of thermodynamic temperature), (2) an arbitrary constant; whether (1) or (2) applies will be clear from the context
L_D	differential nonlinearity
L_I	integral nonlinearity
MCA	multichannel analyzer

Copyright © 1989 IEEE All Rights Reserved

Copyright The Institute of Electrical and Electronics Engineers, Inc.
Provided by IHS under license with IEEE
No reproduction or networking permitted without license from IHS Not for Resale

MHz	megahertz
Ω	ohms
ppM	parts per million
P/Z	pole/zero
Q	electric charge
q_n	rms noise charge
q_{ni}	equivalent rms noise charge referred to the input of a preamplifier
q	charge of the electron, 1.602×10^{-19} coulombs
R	electrical resistance
R_d	detector bias resistor
r_o	internal resistance (source resistance)
R_o	characteristic resistance or terminating resistance
R_f	feedback resistor in a charge-sensitive preamplifier
RBA	reference biased amplifier
SNR	ratio of the peak signal to the rms noise
t	time
t_f	pulse fall time, 90%-10% of the peak height
t_r	pulse rise time, 10%-90% of the peak height
t_p	pulse peaking time, measured from 1% of the peak height to the center of the peak
t_{p1}	bipolar-pulse peaking time, measured from 1% of the peak height of the primary lobe to the center of its peak
t_{p2}	bipolar-pulse peaking time, measured from 1% of the peak height of the primary lobe to the center of the secondary peak
t_{xo}	crossover time of a bipolar pulse
$t_{0.5}$	shaping index (width of a shaped pulse at 50% of its peak height)
$t_{1/2}$	same as $t_{0.5}$
t_n	width of a pulse at the fraction n of its peak height, where n is specified as 0.1, 0.01, etc
τ	time constant
V	electric voltage
V_a	pulse height at amplifier output
V_{in}	pulse height at amplifier input
V_m	rated maximum output voltage of an amplifier
Z_o	characteristic impedance

1.4 Constants and Conversion Factors

q	1.602×10^{-19} coulombs
ε_{Ge}	2.97 ± 1% eV per hole-electron pair at 77K for x-rays and γ-rays.
ε_{Si}	3.63 ± 1% eV per hole-electron pair at 290-300K for α-particles
ε(for P10 gas, 90% argon 10% methane)	≈25 eV per ion pair
rms to FWHM	multiply by 2.355
average to rms (voltmeter)	multiply by 1.284

1.5 References

This standard shall be used in conjunction with the following publications:

[1] ANSI/IEEE Std 300-1988, IEEE Standard Test Procedures for Semiconductor Charged-Particle Detectors.[2]

[2]ANSI/IEEE publications are available from IEEE Service Center, 445 Hoes Lane, PO Box 1331, Piscataway, NJ 08855-1331, or from the Sales Department, American National Standards Institute, 1430 Broadway, New York, NY 10018.

Copyright © 1989 IEEE All Rights Reserved

Copyright The Institute of Electrical and Electronics Engineers, Inc.
Provided by IHS under license with IEEE
No reproduction or networking permitted without license from IHS Not for Resale

[2] ANSI/IEEE Std 325-1986, IEEE Standard Test Procedures for Germanium Gamma-Ray Detectors.

[3] IEEE Std 194-1977, IEEE Standard Pulse Terms and Definitions.

2. Spectrometer

A simple spectrometer 1for determining the spectrum of ionizing radiation is shown in Fig 1. It comprises a detector with its bias supply, a preamplifier, main amplifier, possibly a biased amplifier, and a multichannel analyzer.

2.1 Detectors

Detectors fall into several classifications: gas-filled, semiconductor, and scintillation.

Gas-filled detectors, such as gridded ionization chambers, are used for spectroscopy of large-area α-particle samples (≈0.7%-1% energy resolution for 5 MeV α-particle emitters). Proportional detectors in spectroscopy applications are used principally for the measurement of low-energy x-rays (≈12% resolution at 10 keV). The poor stopping power for energetic photons makes these detectors unsuitable for γ-ray spectroscopy.

Semiconductors, such as germanium and silicon, combine high density and low ionization potential, making them very suitable as detectors for several types of radiation. Germanium detectors are used for the highest-resolution spectroscopy of γ-rays (≈0.2% for a 1 MeV γ-ray). Silicon detectors are used principally in the detection and spectroscopy of xrays and heavy charged particles (spectral resolution of 0.25%-0.4% for 5 MeV α-particles).

Scintillation detectors combine a phosphor with a photo multiplier. A phosphor such as thallium-activated sodium iodide (NaI(Tl)) is denser than germanium and makes an efficient detector of energetic γ-rays. Also, it can be formed into much larger detectors than is possible with germanium. However, the energy resolution of NaI(Tl) is relatively poor—5-6% for a 1 Mev γ-ray.

2.1.1 Detector Signal

Regardless of the type of detector, the incoming radiation eventually is converted to a quantity of charge that is collected under the influence of the bias voltage applied between anode and cathode.

The charge is deposited on the feedback capacitor of the charge-sensitive preamplifier to produce a voltage step of magnitude Q/C_f volts (see A2.2). This voltage step is the desired signal.

In gas-filled detectors, incoming radiation ionizes gas molecules. In semiconductor detectors, the interactive medium is the crystal lattice of the semiconductor: electrons and holes are released by the ionizing radiation.

In scintillation detectors, a two-step process is involved: the incoming radiation fluoresces the phosphor, and the emitted light releases electrons from the cathode of an optically-coupled photomultiplier tube. The electrons are multiplied in their transit through the dynode structure, then collected at the anode. In high-energy physics and some other applications, photodiodes may be used instead of photomultipliers.

It is desirable to express the preamplifier sensitivity in terms of volts per unit energy of the ionizing radiation. This is impractical for scintillation and proportional detectors, because charge multiplication occurs that can be proportional to as much as the 10th power of the detector bias voltage; because of this, the relationship between the energy of the ionizing event and the charge collected at the output terminal is not fixed. For preamplifiers that are used with multiplying detectors, sensitivity shall be expressed in volts per coulomb, as opposed to volts per unit energy, and noise shall be expressed in units of equivalent input charge (or electrons).

 Copyright © 1989 IEEE All Rights Reserved

Copyright The Institute of Electrical and Electronics Engineers, Inc.
Provided by IHS under license with IEEE
No reproduction or networking permitted without license from IHS Not for Resale

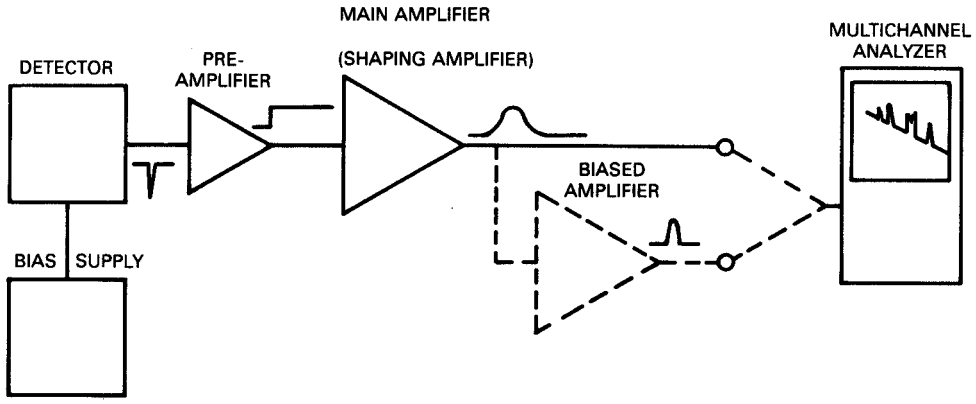

Figure 1—Spectrometer

In semiconductor detectors and gridded ionization chambers, charge and energy are related by constants that are substantially independent of the bias voltage. For preamplifiers that are used with non-multiplying detectors, sensitivity shall be expressed in volts per unit energy (volts per eV, keV, or MeV), and noise shall be expressed in units of equivalent input energy (eV, keV, or MeV). Also, the type of detector for which the sensitivity specification applies (germanium, silicon, etc) shall be stated.

The detector is simulated by a rectangular pulse generator coupled to the preamplifier through a small, stable, low-noise capacitor (0.1 pF-10 pF). The detector and preamplifier treated as a unit is simulated by a tail-pulse generator coupled directly to the main amplifier.

2.1.2 Rise Time and Fall Time

The fall time t_f of the output signal of a preamplifier is controlled by its feedback network R_fC_f.

The rise time t_r is controlled either by the detector or the preamplifier, whichever is slower. Detector capacitance has no effect on rise time except as it affects the feedback factor in a charge-sensitive preamplifier.

In nonmultiplying detectors, t_r is determined by the collection time; in charge-multiplying detectors, other factors may control. The range of t_r in nonmultiplying detectors is from less than 1 ns to more than 1 μs, depending on the type and size, and where in the active volume the initial ionization occurs. For germanium detectors, t_r usually is between 10 ns and 100 ns, depending on the distance between collecting electrodes. It would seem that in simulating the detector signal, the t_r of the generator should match that of the detector. This is practical when the rise time does not vary appreciably from pulse to pulse, as is true with scintillation detectors, but impractical with semiconductor or gas-filled detectors because the collection time does vary. Therefore, the pulse-generator t_r shall be less than or equal to that of the fastest-rising signal that can emerge from the preamplifier. For semiconductor-detector preamplifiers, see 3.2.1.

2.2 Preamplifier

Preamplifier configurations are voltage-sensitive or charge-sensitive (see A2.2). In voltage-sensitive preamplifiers, output pulse height and fall time depend on detector capacitance. In charge-sensitive preamplifiers, pulse height and fall time are nearly independent of this capacitance, depending instead on a stable feedback capacitor C_f. The term "gain" as a measure of amplification does not apply to a charge-sensitive preamplifier; the term "charge-sensitivity" shall be used instead, with units of volts per coulomb or volts per keV, whichever is applicable.

The charge-sensitive category can be subdivided into resistor-feedback and pulsed-reset. In the former, the output signal decays exponentially. In the latter, the signal does not decay until a reset pulse occurs. (The reset signal may be

Copyright © 1989 IEEE All Rights Reserved

Copyright The Institute of Electrical and Electronics Engineers, Inc.
Provided by IHS under license with IEEE
No reproduction or networking permitted without license from IHS Not for Resale

introduced optically to the detector or the input FET, by conduction through a transistor or diode, or through a combination of methods.) Most of the tests described in this standard will apply to both circuit configurations, but no specific tests for pulsed-reset preamplifiers are covered herein.

Charge-sensitive preamplifiers are the most widely used at this writing and, in this standard, is the category to which the term "preamplifier" refers.

2.3 Main Amplifier (Shaping Amplifier)

The main amplifier usually has a gain adjustable between a minimum of × 2 and a maximum of × 3000, but a different range may be chosen by the manufacturer. A rated maximum output V_m of 10 V has become a de facto standard; this V_m will be assumed, but is not mandated (slight modifications of the test procedures may be required if a different V_m is used). The main amplifier contains a pulse shaping network (hence the alternate term "shaping amplifier") to improve the SNR and reduce the width of the pulses that emerge from the preamplifier (see A2.3). Pulse shaping is an item of central importance in high-resolution spectroscopy. The shaping time of a unipolar pulse shall be defined as the width of that pulse measured at 50% of its peak height and shall be referred to as the "shaping index", "$t_{0.5}$" or "$t_{1/2}$"[3] (see 4.1.1 and 4.1.2 for nomenclature that shall appear on the front panel of a main amplifier). The importance of this indicator of shaping time is that it facilitates energy-resolution comparisons between amplifiers with different shaping networks. This comparison is illustrated in Fig 2. Main amplifiers from three manufacturers were used, with a different shaping network in each amplifier. The same high-purity germanium detector supplied the signals for all of the measurements, which were made at 2 kc/s and 62 kc/s on the 1.33 MeV λ-ray from a ^{60}Co source. If $t_{1/2}$ is the index of shaping time, all of the test points at the lower counting rate fall very nearly on the same line. At the higher rate, performance differences appear. If the shaping times indicated on the front panels of the different amplifiers were used instead, each amplifier would have produced a resolution curve displaced laterally from the others, making it difficult to compare performance.

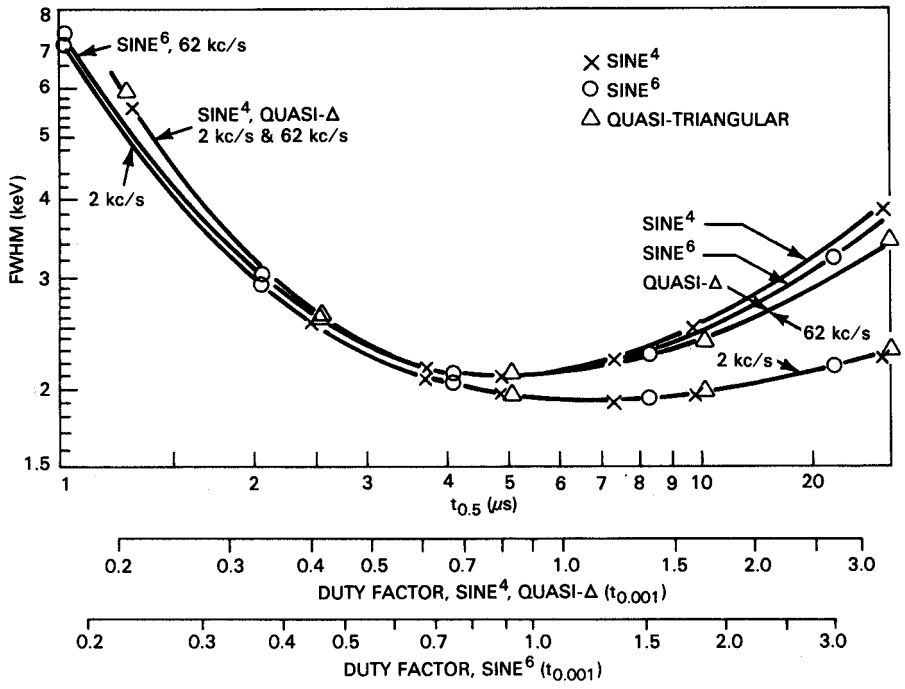

Figure 2—Energy Resolution vs $t_{1/2}$

[3]This parameter replaces t_p used in earlier standards.

Copyright © 1989 IEEE All Rights Reserved

Copyright The Institute of Electrical and Electronics Engineers, Inc.
Provided by IHS under license with IEEE
No reproduction or networking permitted without license from IHS
Not for Resale

Other parameters of interest are t_p and $t_{.01}$ (Fig 5). The ratio $2t_p/t_{.01}$ is a measure of the pulse symmetry, therefore an indicator of series-noise performance (see Fig A-2). The width $t_{.01}$ in conjunction with t_p shows how closely two pulses may be spaced before the first affects the height of the second. Also, $t_{.01}$ is near the threshold level of the BLR; the duty cycle measured at this level is a good indication of when the BLR will lose control of the baseline.[4] If no qualifications are given, it shall be understood that the resolving time of a shaped pulse is its width at $t_{.01}$.

Bipolar-pulse parameters of interest are t_{p1}, t_{p2}, width of the leading lobe (1% to crossover), width of the trailing lobe (crossover to 1%), and V_{a2}. A measure of symmetry of the unipolar pulse before it undergoes the second differentiation is the ratio of the pulse heights of primary to secondary lobes, V_{a1}/V_{a2}. The preceding definition of resolving time shall apply to bipolar pulses as well as to unipolar pulses.

2.4 Biased Amplifier

A biased amplifier has an adjustable threshold below which the signal amplification is zero and above which it can be varied (usually, in the range of ×1-×10). The effect is to magnify the portion of a spectrum that lies above the threshold (bias) setting. Because most of the peaks in an α-particle spectrum fall into a narrow band of energies, a biased amplifier is particularly useful in this measurement—the amplifier spreads the band over A times as many channels as would otherwise occur, where A is the gain setting. For example, with $A = 8$ and with an MCA having only 500 channels, the resolving power of a 4000-channel MCA is obtained over a 12.5% region of the spectrum. Alternatively, a 4000-channel MCA in conjunction with an eight-channel linear multiplexer can be used to acquire data from eight spectrometers on a time-sharing basis if each has its own biased amplifier; each spectrometer will have the equivalent resolution of the full 4000 channels, but its data will occupy only 500.

2.5 Multichannel Analyzer

An MCA basically consists of an analog-to-digital converter (ADC), a memory unit, and a display. The spectrum distortion in the ADC renders an MCA unsuitable for testing high-resolution amplifiers and preamplifiers. For that reason, the tests herein avoid its use.

3. Test Instruments

3.1 Test Setup

A test setup is shown in Fig 3. By altering cable connections at the dotted lines, the setup can be used for all tests except crossover walk and nonlinearity measurements of the preamplifier and biased-amplifier. The ac voltmeter is not required for linearity tests and the bridge is not required for noise measurements. The preamplifier and capacitor box are not required for measurements made only on the main amplifier.

In this and other test setups, it is essential that the BNC connectors at the ends of the cables be in good mechanical condition to assure low-resistance electrical connections. The same is true of adapters, such as tees and elbows. In the cable connectors, it may be necessary to slightly bend (with a jeweler's screwdriver) the ears of the internal grounding ring to restore the spring action. In tees and elbows, the center pin should be screwed into its mating part with needle-nosed pliers. It should be recognized that with source and terminating resistors of 50 Ω, a resistance variation of 0.1 Ω in a connector causes a 0.1% variation in pulse height.

A back-terminating resistance of 50 Ω is assumed for the pulse generator and amplifiers under test, but any value of R_O may be used as long as the attenuator and cables are compatible with it, that is, correctly terminated.

[4] In the earlier standard, t[.001] was the measure of pulse width, but this low level is subject to errors caused by P/Z misadjustment, noise, and generator artifacts. The pulse width at $t_{.001}$ is 10% to 25% wider than at $t_{.01}$, depending on the particular shaping network that is used (App Fig A-2).

Copyright © 1989 IEEE All Rights Reserved

Copyright The Institute of Electrical and Electronics Engineers, Inc.
Provided by IHS under license with IEEE
No reproduction or networking permitted without license from IHS
Not for Resale

3.1.1 Test Instrument Accuracy

The particular components of the setup requiring high accuracy are C_c, the attenuator, the ac voltmeter, the arms of the nonlinearity bridge, and the oscilloscope sweep time. Neither the generator amplitude nor the oscilloscope sensitivity need be separately accurate if they are calibrated against each other (see 3.9). Also, if the ac voltmeter is calibrated against the generator (see A3.6.2), the same may be said of the voltmeter.

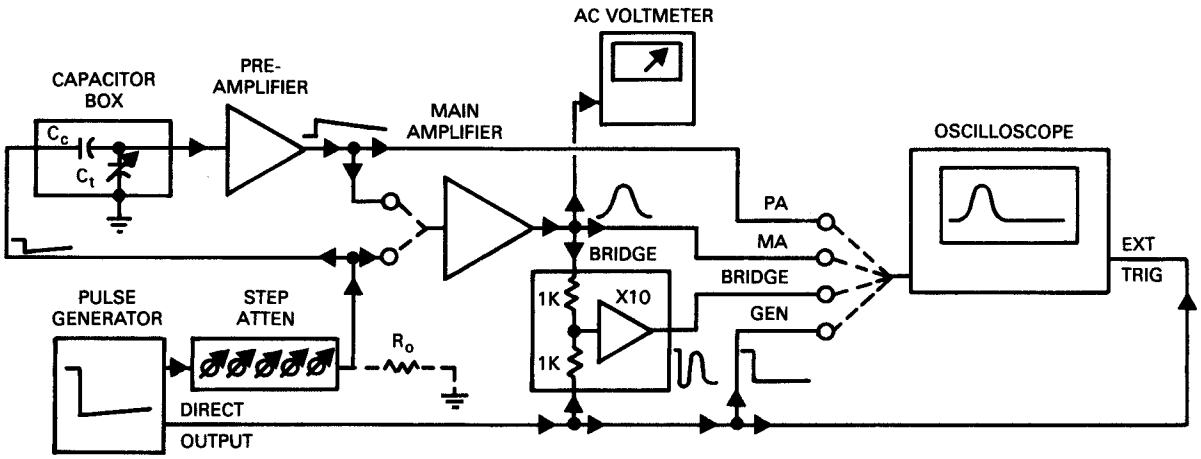

Figure 3—Test Setup

3.1.2 Measurement Accuracy

For items like noise, a measurement accuracy of 1% is usually adequate. For items like nonlinearity, higher accuracy may be required. However, no more decimal places shall be given in instrument specifications than are required for the accuracy of the parameter specified or are inherent in the accuracy of the measurement.

Because errors accumulate when several instruments are used in a measurement, the final accuracy is likely to be less than that of any one of the test instruments. If errors are random, it shall be assumed that the separate errors add as the square root of the sum of the squares.

3.2 Pulse Generators

The open-circuit output voltage V_p of the generator shall be at least 10.0 V and the output shall be controlled with resolution at least as good as that afforded by a multiturn pulse-height control with 1000 divisions full scale. (In the test procedures, the 10 Volt V_p and a 1000 div dial will be assumed unless otherwise stated. A different V_p or means of controlling it may affect some of the details of the tests, but not the methods.)

The generator shall be provided with at least two outputs, each with its own back-terminating resistor, and with a common source resistance r_o of 0.5 Ω or less. An additional output for triggering the oscilloscope sweep is highly desirable, but is not shown in Fig 3.

Generators shall be operable both at and away from the power-line frequency as a means of uncovering hum pickup in the system under test (if hum is present, a generator operated at the power-line frequency will not uncover it).

Copyright © 1989 IEEE All Rights Reserved

Copyright The Institute of Electrical and Electronics Engineers, Inc.
Provided by IHS under license with IEEE
No reproduction or networking permitted without license from IHS Not for Resale

3.2.1 Pulse Generator, Preamplifier Tests

It is recommended that the pulse generator produce a fiat-topped pulse, although a tail pulse may be used for all tests except examination of the preamplifier's exponential recovery to the baseline. Here, a rectangular pulse shall be used for the test because the decay of a tail-pulse signal will be confused with that of the preamplifier (see A3.2.1 and A4.2).

For the determination of t_r, the generator signal shall have a rise time less than 1/3rd that of the preamplifier's and shall have a settling time shorter than that of the preamplifier's. Flat-topped pulse generators with t_r of 1 ns or less are commercially available (but not with 10-turn dials); mercury-relay tail-pulse generators are available with t_r of 5 ns or less (see A3.2.1). When testing preamplifiers for use with scintillation detectors, the generator t_r shall first be shorter than that of the preamplifier in order to examine it for incipient instability (excessive ringing), then be adjusted to match the t_r of the scintillator if it is longer than the t_r of the preamplifier. Usually, shunting the output terminal of the generator with a capacitor of appropriate size can be used to adjust t_r (if connections are short to avoid ringing). When testing preamplifiers for use with semiconductor and gas-filled detectors, the t_r of the generator shall be less than 1/3rd that of the shortest t_r of the detector-preamplifier combination (see 2.1.2).

3.2.2 Pulse Generator, Main-Amplifier Tests

A rectangular-pulse generator is recommended (see A3.2.2), but a tail-pulse generator may be used. When testing overload or P/Z operation, use of a tail pulse is mandatory. A tail pulse can be obtained from a flat-topped pulse by interposing a film-type capacitor between the generator and the attenuator or between the attenuator and its terminating resistor. The former location is preferred because the attenuator acts as a buffer against variations in loading at the output of the attenuator.

3.3 Step Attenuator

The attenuator may be part of the generator or external to it. If internal, it is recommended that its input be accessible to aid in checking the calibration. It is also recommended that the attenuator steps match the coarse-gain steps of the main amplifier. A popular sequence is $\times\sqrt{2}$, $\times 2$, $\times 5$, $\times 10$, $\times 10$, $\times 10$, for a maximum attenuation factor of $\sqrt{2} \times 10^4$. The stability and accuracy of the terminating resistors, internal and external, shall be as good as those used in the attenuator. With all steps switched in, the spurious feedthrough shall not exceed 1% of the output signal expected from the switch settings.

Each step of the attenuator can be calibrated by applying a dc voltage to the input, measuring that voltage with a DVM, then measuring the output with the DVM.

3.3.1 Attenuator Termination

If the attenuator is loaded by no other resistor except its output termination R_o and if the source resistance for the attenuator is R_o, removing the output termination doubles the output voltage. If the attenuator is loaded by the input impedance of the following device, the voltage will be less than doubled.

If the source resistance for the attenuator is other than R_o, the output will not double when the termination is removed at low attenuation, but will nearly double for attenuations of $\times 10$ or more. As an extreme example, if the source resistance is zero ohms and the attenuation factor is $\times 10$, the voltage multiplier will be 1.98 when the output termination is removed; if the attenuation factor is $\times 5$, the multiplier will be 1.92.

If the source resistance for the attenuator is R_o, the step factors are unaffected by mistermination at the output end, that is, whatever voltage appears at the output will be reduced exactly N times when the $\times$N attenuator step is switched in, regardless of the output termination.

An unterminated attenuator presents a source resistance of R_o to the load; terminated, the source resistance is $R_o/2$.

Copyright © 1989 IEEE All Rights Reserved

Copyright The Institute of Electrical and Electronics Engineers, Inc.
Provided by IHS under license with IEEE
No reproduction or networking permitted without license from IHS Not for Resale

3.3.2 Attenuator Error

Errors in the attenuation factors due to resistor tolerance accumulate algebraically as steps are switched in.

3.4 Capacitor Box

The circuit of a capacitor box is shown in the test setup of Fig 3. The coupling capacitor C_c shall be known with an error not greater than 1% (see A3.4). The box shall also contain a group of switchable shunt capacitors, enough to span the range of input capacitance for which the preamplifier was designed. C_c shall be shielded or isolated from the shunt-capacitor switch so that changing its setting does not affect the through-capacitance of C_c.

Capacitors shall be made with low-loss insulation, such as quartz, porcelain, low-loss ceramic, polystyrene, or polycarbonate. Dielectric materials such as polyester, mica, and high-dielectric-constant ceramic are unsuitable. All other insulators within the box (switches, connectors) shall be of low-loss materials such as fluorocarbons or the materials of which the capacitors are made.

3.5 Shaping Amplifier

When used to measure preamplifier noise, the shaping amplifier shall contain a quasi-Gaussian filter network (see A2.3). The shaping index $t_{0.5}$ shall be specified. The influence of the BLR on noise measurements shall be removed (see A4.5).

3.6 AC Voltmeter

The voltmeter shall have full-wave average response or full-wave true rms response with a crest factor not less than four. For measurements of series noise on an amplifier with CR-$(RC)^4$ shaping, BW × $t_{1/2}$ shall be not less than $3.8/\sqrt{\theta}$, and for parallel noise, not less than $1.6/\sqrt{\theta}$, where BW is the 3 dB bandwidth (in MHz) of the meter, $t_{1/2}$ is the shaping index in μs, and θ is the permissible error in percent (see A3.6-A3.6.2).

3.7 Oscilloscope

The oscilloscope shall have a dc-coupled input, have external sweep triggering, shall have sufficient internal delay for observing the leading edge of an input signal, and shall have a rise time not greater than 1/3rd of the shortest t_r to be observed or measured. For measurements of crossover walk, the oscilloscope shall also have a delayed sweep with the sweep speed commensurate with the walk to be measured.

3.8 Nonlinearity Bridge

A nonlinearity bridge basically consists of two series-connected resistors (usually 1 kΩ each), one of which is connected to the amplifier under test, the other to the signal generator (see the bridge block in Fig 3). If the two signals are of opposite polarity but alike in amplitude, a null will occur at the peak (Fig 4). In testing the main amplifier, varying the generator output will not change the null if the amplifier is perfectly linear, but will if it is nonlinear.

In the bridge circuit that produces the waveforms shown in Fig 4, there is a switch that disconnects the amplifier when moved to the ADJUST position. This reduces the "gain" to ×0.5 and increases the dynamic range of the bridge to ±5 V. This reduction in sensitivity facilitates a quick trial balance; the resulting waveform is one of those shown in Fig 4 along the ADJUST trajectory. (In the absence of the amplifier pulse, the generator signal will lie along the −5 V line. The top of the generator pulse can be considered as the baseline for the amplifier pulse.) In the USE position, the gain is ×10 and the signal trajectory follows the -1 V line. This allows the oscilloscope sensitivity to be increased to 0.2 V/DIV.

Copyright © 1989 IEEE All Rights Reserved

Copyright The Institute of Electrical and Electronics Engineers, Inc.
Provided by IHS under license with IEEE
No reproduction or networking permitted without license from IHS Not for Resale

For the oscilloscope to have adequate sensitivity without being subjected to overload, the bridge shall have a built-in amplifier with a gain of ×10, a rise time not greater 50 ns, a linear output range of ≈±0.5 V, and a saturation voltage not over ±1 V. The bridge arms shall be temperature insensitive so that transient heating caused by amplifier and generator signals does not cause unbalance in the bridge itself. It is also necessary that the input resistance remain constant over a range of at least ±10 V. Bridges of this type are not commercially available at this writing, but one may be constructed from the information given in A3.8.

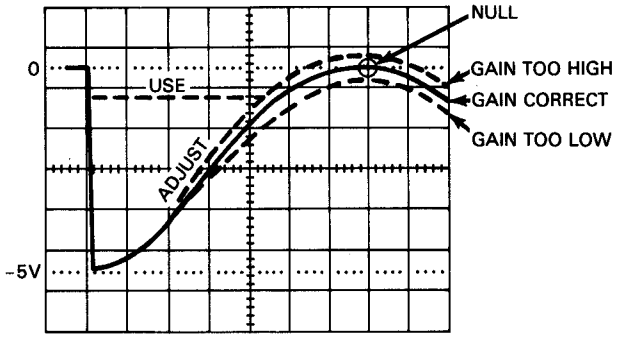

(NOTE: See text for the meaning of USE and ADJUST.

Figure 4—Oscillogram of Bridge Balance

Because the bridge allows high-sensitivity viewing of the difference between two large voltages, it has uses in addition to the measurement of nonlinearity, such as the examination of the top of a generator pulse to determine whether any ringing or sag that seems to be present is in the device under test or in the generator. This examination is made possible by bucking the generator output against a dc voltage. Other examples will be given in 4.9–4.11.

3.9 Oscilloscope/Generator Calibration

For measurements such as gain, charge sensitivity, and noise, the output and input voltages appear in equations as ratios; neither voltage need be individually accurate, but it is necessary that the oscilloscope be calibrated against the generator. The procedure is as follows:

1) Connect the oscilloscope to one of the direct-output terminals of the generator.
2) Adjust the generator output to 5.00 V as indicated by its dial(s).
3) At a sweep speed likely to be used for amplifier measurements, adjust the oscilloscope vertical sensitivity for 5.00 DIV trace deflection (vertically-centered waveform. “DIV” refers to major graticule divisions, and “div” to minor graticule divisions).

When a tail-pulse generator is used, the calibration shall be made at the top leading corner of the pulse, that is, where the projection of the leading edge (in the upward direction) meets the projection of the exponential tail (in the direction towards zero time), averaging any ringing that may be present.

With the usual CRT graticule, 25 div will be included within a 5 DIV deflection (see Fig 5). With a narrow, well-focussed trace splitting horizontal graticule lines at the baseline and the top of the pulse, a resettability to less than 0.1 div is possible, yielding a precision of better than 0.5%. If possible, the calibration should be fixed by internal adjustment of the oscilloscope or generator so that the variable sensitivity control on the front panel of the oscilloscope can be fixed at full scale. The calibration shall be checked before each test run.

Copyright © 1989 IEEE All Rights Reserved

Copyright The Institute of Electrical and Electronics Engineers, Inc.
Provided by IHS under license with IEEE
No reproduction or networking permitted without license from IHS Not for Resale

Wherever possible, the tests described here are designed to keep the trace deflection at 5.00 DIV, thereby eliminating oscilloscope nonlinearity as a source of error. The precision can be enhanced 100 times if the nonlinearity bridge is used to compare the signals from amplifier and generator, but this is rarely necessary.

4. Main-Amplifier Measurements and Specifications

Generally, a preamplifier should not be used when making main-amplifier measurements. The source of the signal should be either a tail-pulse or rectangular-pulse generator. If a preamplifier is used, a rectangular-pulse generator is preferred, but a tail-pulse generator may be used if the conditions described in A4.2 are met.

4.1 Pulse-Shape Parameters

Unipolar and bipolar quasi-Gaussian pulses are shown in Fig 5. The bipolar pulse is derived from the unipolar pulse by adding a CR differentiator to the unipolar shaping network. The parameters of interest were listed in 2.3 and shown in Fig 5. In this figure, the same time scale represents both unipolar and bipolar pulses. For the outer traces, the vertical scale factor for the leading and trailing edges has been magnified 10 times to show where the 1% points lie.

4.1.1 Front-Panel Nomenclature, Unipolar Shaping

If the front panel of a commercially-manufactured main amplifier contains a shaping-time dial, the calibration shall be in units of $t_{1/2}$ in ns, μs, or ms, when the amplifier is in the unipolar shaping mode, and the dial shall be entitled "SHAPING INDEX", "INDEX", "$T_{1/2}$", or some variation that clearly indicates that the width of the shaped pulse is $t_{1/2}$. Conversely, the term "SHAPING INDEX" shall not be used for shaped-pulse widths other than $t_{1/2}$. Other pulse-shaping parameters may appear on the panel, but shall be clearly subsidiary to the one referring to $t_{1/2}$. When two modes of unipolar operation are possible (such as quasi-Gaussian and quasi-triangular), if $t_{1/2}$ differs between the two, a multiplying factor that relates them shall appear on the panel, or the dial shall be such that the two waveforms are separately calibrated.

Heretofore, some manufacturers have calibrated the shaping-time dial in units of t_p. With the exception of the sines unipolar shaping network, $t_{1/2}$ is numerically different from t_p (see the table in Fig A-2. With the sines network, the factor relating $t_{1/2}$ to t_p is very nearly unity: 0.98).

Copyright © 1989 IEEE All Rights Reserved

Copyright The Institute of Electrical and Electronics Engineers, Inc.
Provided by IHS under license with IEEE
No reproduction or networking permitted without license from IHS Not for Resale

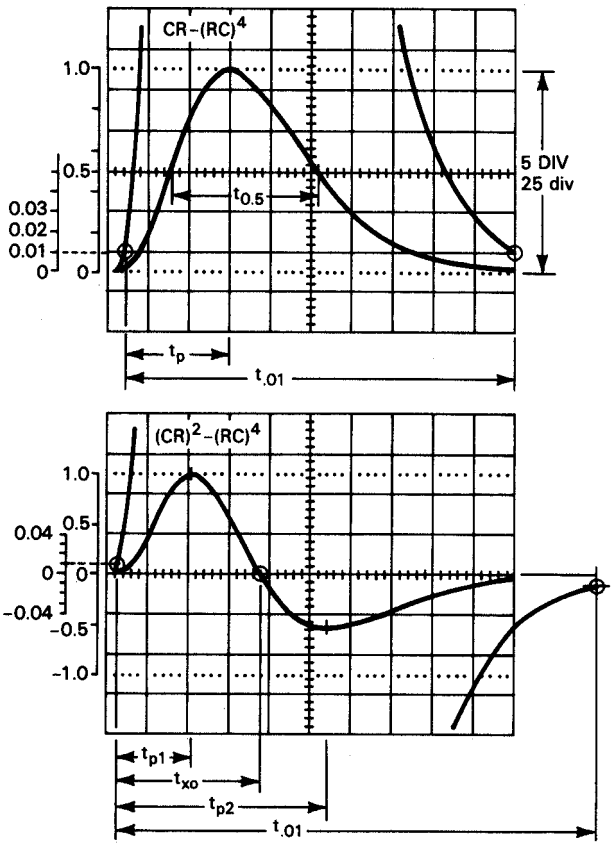

Figure 5—Unipolar and Bipolar Pulses

4.1.2 Front-Panel Nomenclature, Bipolar Shaping

For bipolar shaping derived from a unipolar network by the addition of a differentiator with the same time constant as the first one, a waveform is produced in which the primary lobe is slightly wider than $t_{1/2}$ of its progenitor unipolar pulse. Front-panel indication of the bipolar pulse width is optional, but that information shall be included in the specifications.

4.2 Pulse Width

1) Begin with unipolar shaping and turn off the BLR.
2) If the amplifier does not contain a circuit for automatic P/Z-cancellation, adjust it manually so that the trailing edge of the pulse returns exactly to the baseline.
3) Adjust the pulse height for 5.00 DIV on the CRT and center the peak on a major vertical graticule line.
4) Increase the vertical sensitivity 10 times, causing 2.5 div to represent 1% of the pulse height.

In Fig 5, t_p is shown as the time difference between the peak location and the encircled 1% point. (Note that 5 DIV = 25 div.)

The width $t_{.01}$ also can be measured at this time; for highest accuracy, the leading 1% point should be located on a major vertical graticule line, and the sweep width should be adjusted to make the pulse occupy at least 5 DIV horizontally.

Copyright © 1989 IEEE All Rights Reserved

Copyright The Institute of Electrical and Electronics Engineers, Inc.
Provided by IHS under license with IEEE
No reproduction or networking permitted without license from IHS
Not for Resale

To measure $t_{0.5}$, return to the original sensitivity, center the leading 50% point on a vertical graticule line, and determine the time to the trailing 50% point. Using the preceding methods, measure the points of interest on the bipolar pulse.

4.3 Overload Recovery

Overload recovery time shall be included in the amplifier specifications and shall be specified as the ratio between the following two time intervals:

1) The time required to recover from a stated overload factor to a stated percentage of V_m,
2) The time required for a nonoverloaded pulse to recovery to that same percentage of V_m.

The maximum overload factor and the percentage of V_m to which recovery is specified are at the option of the manufacturer, but the method of measurement shall be the one described in 4.3.1.

At high gain and heavy overload, baseline artifacts in the signal source that would be invisible in normal operation may become prominent. Because the distributed capacitance across the high-megohm feedback resistor in the preamplifier can cause departure from a simple exponential decay and cause such an artifact, a preamplifier shall not be part of the signal chain during tests of overload recovery time. Instead, a tail-pulse generator shall be the source of the signal. The overload-recovery time shall be specified for a signal-decay time constant of 50 μs or more, and that time constant shall be included as part of the overload-recovery specifications. If the amplifier contains a BLR or an automatic P/Z-cancellation circuit, or both, and if overload performance depends on the settings of those circuits, that fact shall be stated in the specifications.

The minimum practical gain for the main amplifier is ×2 (if it is lower, the preamplifier will saturate at a counting rate too low to be useful). If, at that minimum gain, a generator signal of amplitude $V_m/2$ is applied to the input of the main amplifier, the output signal will be V_m. If now the gain control is advanced to its maximum setting, the amplifier will be overloaded by a factor equal to the range of its gain control. The overload recovery-time specification shall not specify an overload factor greater than the gain-control range of the main amplifier because to do so requires:

1) An unrealistic operating condition for the preamplifier.
2) A tail-pulse-generator open-circuit output signal greater than 10 V.

4.3.1 Overload Recovery Time, Unipolar

1) Terminate the generator in its characteristic resistance and do not remove the termination during the test. An attenuator is not required and shall not be used.
2) If a BLR or an automatic P/Z control or both are part of the amplifier and are adjustable by the user, include the settings in the specifications at which the tests are made.
3) Set the amplifier at minimum gain, adjust the generator to produce V_m at the amplifier's output terminal, and adjust the oscilloscope for a 5.DIV pulse height on the CRT.
4) Increase the oscilloscope sensitivity by some factor that places the desired “recovery-to” level on a horizontal graticule line (for example, in 4.1 and Fig 5, a ×10 increase placed the 1% level 2.5 div from the baseline).
5) Advance the gain control to the desired overload level and, in amplifiers with non-automatic P/Z cancellation circuits, adjust the P/Z control for best possible baseline recovery. The P/Z setting shall not be changed for the remainder of the test.
6) Adjust the oscilloscope sweep width so that an integral number of DIV is included between the leading-edge and trailing-edge markers (for example, 8 DIV). The sweep need not be in a calibrated mode for this setting.
7) Finally, return to the minimum-gain setting and, without touching the sweep controls, count the divisions included between the leading and trailing edges at the desired recovery level. The overload recovery time is the ratio between the overloaded and incipiently overloaded pulse widths.

Copyright © 1989 IEEE All Rights Reserved

Copyright The Institute of Electrical and Electronics Engineers, Inc.
Provided by IHS under license with IEEE
No reproduction or networking permitted without license from IHS Not for Resale

Example: For an arbitrary shaping index, the sweep is adjusted for an 8.0 DIV separation between the 1% V_m levels at ×1000 overload. At minimum gain, the separation drops to 3.9 DIV. The times-overload recovery is 8.0/3.9 = 2.1 nonoverloaded pulse widths at the 1% level for ×1000 overload.

The baseline recovery due to P/Z cancellation artifacts shall be observed as the gain setting is reduced step by step from its maximum. If at any gain setting an undershoot or back porch develops, the times-overload specification shall be reduced to that gain range for which the baseline recovery is unaffected P/Z cancellation artifacts.

Example: If in the foregoing procedure it is found that reducing the gain setting from ×1000-×500 causes an undershoot to develop due to incomplete P/Z cancellation, but no further change occurs for settings below ×500, the specification for overload recovery in the previous example shall be reduced to "2.1 nonoverloaded pulse widths at the 1% level for ×500 overload" (or whatever it turns out to be).

It might seem that setting the gain to maximum and changing the signal height by means of an external step attenuator is an equally valid way of determining overload recovery time. It is not, particularly if a mercury-relay tail-pulse generator is the signal source. The reason is that the input impedance of the amplifier loads the attenuator, and when its setting is changed, the load on the storage capacitor in the generator changes. This change in load affects the decay time and the P/Z cancellation.

4.3.2 Overload Recovery Time, Bipolar

Bipolar overload recovery time is measured in the same way as for unipolar, except that the criterion for recovery is measured at the trailing edge of the second lobe. It will be observed that the sensitivity to P/Z misadjustment is less for bipolar shaping than for unipolar, but the adjustment (in non-automatic P/Z-cancellation amplifiers), which should be made in the unipolar mode, may not be ignored.

4.3.3 Blocking (Paralysis)

Following a heavy overload, it is possible for the output signal of the amplifier to return to the baseline and give the impression of normal recovery when in fact the amplifier is paralyzed, that is, internally saturated so that a small-amplitude signal will not be transmitted to the output. This can occur in the bipolar mode if the P/Z compensation has not been carefully adjusted, or the phenomenon may be a consequence of the amplifier and/or preamplifier design. A sensitive and accurate indication of full recovery is the appearance of a normal noise level on the baseline: the noise constitutes the low-amplitude signal referred to above, the absence of which is an indication of paralysis.

4.3.4 Baseline Artifacts

As the gain is raised to increase the overload by a factor of 1000 or more, mechanical oscillation of the armature in a mercury-relay generator will cause oscillations to become visible on the baseline. This spurious signal is not due to a shortcoming in the amplifier but to the voltage induced in the relay armature by its movement within the magnetic field of the actuating coil, or modulation of the resistance at the relay contacts, or both. This artifact can be identified by physically striking the generator: if caused by the relay, the oscilloscope pattern will change.

4.4 Gain-Control Calibration and Main-Amplifier Gain

The most accurate method of gain determination and gain-control calibration is to compare the amplifier gain settings with the steps on an attenuator. If the dial markings do not match, differences can be adjusted with the calibrated pulse-height control on the generator. The basic principle is that if the output voltage of the amplifier and the input voltage to the attenuator are made equal, the amplifier gain is numerically equal to the attenuation factor to which the attenuator is set.

The setup of Fig 3 is used without the preamplifier, bridge, or voltmeter. The attenuator shall be unterminated, and the oscilloscope shall have been calibrated against the generator as described in 3.9.

Copyright © 1989 IEEE All Rights Reserved

Copyright The Institute of Electrical and Electronics Engineers, Inc.
Provided by IHS under license with IEEE
No reproduction or networking permitted without license from IHS Not for Resale

4.4.1 Coarse-Gain Calibration

1) Set the generator's pulse-height dial at 500.
2) Set the amplifier's coarse-gain dial to maximum and the generator's attenuator switches to match the coarse-gain setting, that is, if the gain-control setting is 2000, the product of the attenuator indications should also be 2000.
3) Move the oscilloscope connection to the output of the amplifier and adjust its fine gain to produce a trace deflection of 5.00 DIV.
4) Switch the coarse gain to the next lower step and reduce the attenuator setting by the same factor.
5) With the generator pulse-height dial, restore the trace deflection to 5.00 DIV and record the percentage change in the dial setting necessary to accomplish this. This percentage change is the error of the second gain step relative to the first.
6) Repeat for each of the coarse gain steps.

By following the foregoing procedure, all errors will be normalized with respect to the maximum gain setting. Normalization to a different gain setting may be preferred and is equally valid.

The coarse-gain range and step sequence shall be specified, and it is recommended that tolerance of gain settings be specified as well.

4.4.2 Fine-Gain Calibration

The setup is the same as for the coarse-gain calibration, and the procedure is similar, except that any convenient setting of the coarse gain (and corresponding attenuator setting) may be used as a starting point. If the fine-gain control covers a range of 3:1 or less, only the ×2 and ×√2 attenuator settings will prove usable if an exact parallel of the earlier procedure is followed. A finer calibration can be made by comparison with the generator's pulse-height control.

The fine-gain range shall be specified and it is recommended that the accuracy of dial calibration be specified as well.

4.5 Noise, Main Amplifiers

The SNR in the present context is defined as the ratio of peak signal to rms noise. In a linear amplifier, that ratio does not change from output to input. It follows that if the two quantities are measured at the output and if the input signal is known, the equivalent input noise is $e_{ni} = e_{no}/A$, where e_{no} is the rms output noise and A is the gain V_a/V_{in}.

In the setup of Fig 3, the preamplifier and bridge are not used. Connect the oscilloscope to the output of the amplifier and adjust the P/Z control if necessary (see A4.2 and A4.2.1). If the amplifier contains a BLR, it may suppress part of the noise (see A4.5). Also, the system may be subject to external noise pickup (see A4.5.1). The preceding artifacts must be removed before a valid noise measurement can be made. However, noise pickup from the power bin due to the physical or electrical design of the amplifier shall not be covered up by removing the module from the bin.

With the sequence of settings used in 4.1.1, record the noise voltage e_{no} at each gain step with the generator off, but connected to the amplifier. The equivalent noise referred to the input $e_{ni} = e_{no}/A$. If the meter is an average-responding meter, the indications shall be multiplied by 1.13 for conversion to rms volts. No corrections are necessary with a true-rms meter, but it must have adequate bandwidth for the measurement (see A3.6.1.).

Copyright © 1989 IEEE All Rights Reserved

Copyright The Institute of Electrical and Electronics Engineers, Inc.
Provided by IHS under license with IEEE
No reproduction or networking permitted without license from IHS Not for Resale

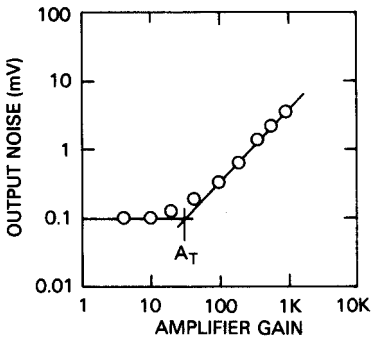

Figure 6—Output Noise vs Gain Setting. The noise transition gain is at A_T.

4.6 Noise Transition Gain

Using the data from the preceding test, graph e_{no} vs A. A curve similar to the one shown in Fig 6 will be obtained. It is recommended that the noise transition gain, defined by the intersection of the two asymptotes, be made part of the amplifier's specifications.

4.7 Pole/Zero Range

In amplifiers equipped with manual P/Z cancellation, fix the P/Z control at its maximum compensation. With a test fixture consisting of an adjustable CR differentiator between the generator and the main amplifier, find the time constant for perfect P/Z compensation. Change the shaping time of the amplifier and repeat until the worst-case condition is found. For example, if at one shaping time the P/Z control will compensate down to a 35 μs time constant, but at a different shaping time only down to 45 μs, the latter shall be specified as the lower limit of P/Z compensation.

In amplifiers equipped with automatic P/Z cancellation, the range of control shall be specified and the method of testing it shall be included in the instruction manual.

4.8 Nonlinearity

Curvature of the dynamic characteristic V_o vs V_{in} constitutes nonlinearity. Integral nonlinearity L_I, which is illustrated in Fig 7, is defined as $100\Delta V_o/V_m$, where ΔV_o is the maximum deviation between the two lines, and V_m is the rated maximum output voltage.

In a modern amplifier, ΔV_o may be less than 0.01% of V_m at the point of maximum deviation. When a bridge is used to measure the nonlinearity, the intersection of the lines at V_m is established by nulling the bridge at that point.

Copyright © 1989 IEEE All Rights Reserved

Copyright The Institute of Electrical and Electronics Engineers, Inc.
Provided by IHS under license with IEEE
No reproduction or networking permitted without license from IHS
Not for Resale

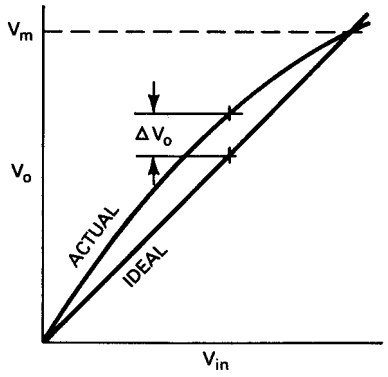

Figure 7—Dynamic Characteristic Illustrating Integral Nonlinearity

To measure L_I, connect the bridge as shown in Fig 3 and connect the oscilloscope to the null detector. Set the generator output to V_m (usually 10 V), with the polarity opposite to that of the amplifier output. (In amplifiers that cannot invert the input signal, it will be necessary to add an inverting stage to the path containing the amplifier under test. See A4.8 for details.) Then proceed as follows:

1) Set the amplifier gain to ≈50 (close to where it might be for a measurement of 1 MeV γ-rays with a germanium detector).
2) Switch out the BLR and adjust the P/Z control, if necessary.
3) Set the output dc offset to zero.
4) Adjust the generator step attenuator and the amplifier fine-gain control to establish a null.

Then, slowly reduce the dial setting of the generator while observing the change in output voltage ΔV_{br} (if any) from the bridge. If there is a change, it should reach a maximum and return to zero when the generator output is below 0.5 V. If the change fails to return to zero at the low end, it may be due to an internal offset generated by the action of the BLR, despite its having been switched off at the front panel. To compensate, note ΔV_{br} at ≈0.5 V. Return to V_m, and with the fine-gain control, unbalance the bridge to produce the same ΔV_{br}. (In some amplifiers, it may be necessary to change the zero offset instead of the gain.) Repeat the test, using the peak of ΔV_{br} as the reference instead of a true null. (This peak will be displaced vertically from the bright dot at the start of the sweep.) If an adjustment can be found for which ΔV_{br} does not change in the range above some minimum voltage on the generator dial, or if ΔV_{br} changes linearly over the range, the amplifier is linear in that range, otherwise not.

The nonlinearity expressed as a percentage of rated maximum output shall be given for the output-voltage range, shaping index, and gain for which the measurements were made.

4.9 Source Resistance

The source resistance r_o can be measured without making internal connections to the amplifier when:

1) There are no back-terminating resistors at the amplifier output terminal(s), or
2) When there are two or more output terminals, each with its own back-terminating resistor (see Fig 8). The method of measurement consists of loading an output terminal and measuring the resulting voltage drop at the junction between r_o and the back-terminating resistors (if any), from which r_o can be computed (see A4.9).

The setup is the same as for measuring integral nonlinearity.

Copyright © 1989 IEEE All Rights Reserved

Copyright The Institute of Electrical and Electronics Engineers, Inc.
Provided by IHS under license with IEEE
No reproduction or networking permitted without license from IHS Not for Resale

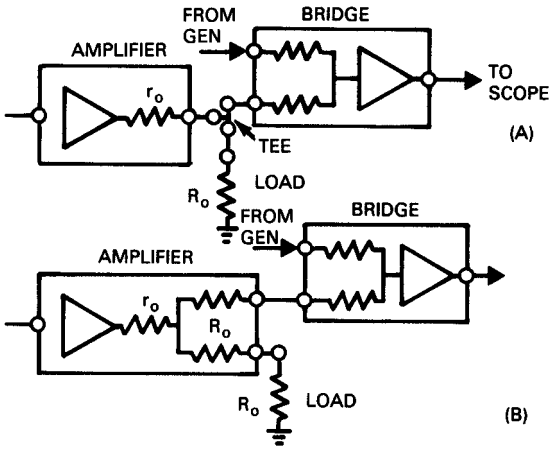

Figure 8—Measurement of Source Resistance r_o. (A) The Amplifier does not Contain Back-Terminating Resistors; (B) The Amplifier Contains Back-Terminating Resistors

If the amplifier has only one output terminal with no back-terminating resistor, drive the bridge through one arm of a tee connector (Fig 8(A)). With the amplifier unloaded except for the bridge, balance it at V_m, then apply a load R_o to the other arm of the tee and note the null unbalance ΔV_{br}. The source resistance is:

$$r_o = \frac{\Delta V_{br} R_o}{A_{br} V_m} \quad (1)$$

where

r_o = source resistance (ohms)
ΔV_{br} = bridge output (volts)
A_{br} = bridge-amplifier gain (volts per volt)
V_m = rated output from amplifier under test (volts).

If the output terminals are back-terminated, apply a load R_o to one of the terminals to which the bridge is not connected (Fig 8(B)). In this instance:

$$r_o = \frac{2\Delta V_o R_o}{A_{br} V_m} \quad (2)$$

Example: 50 Ω back-terminated amplifier, where

V_a =10 V,
Ext load = 50 Ω,
ΔV_{br} = 60 mV,
A_{br} = ×10

The source resistance is:

$$r_o = \frac{(2 \times 0.06\ \text{V} \times 50\ \Omega)}{(10 \times 10\ \text{V})} = 0.06\ \Omega.$$

The back-terminating resistance shall be specified. If none is used, or if there are two or more output terminals, the common source resistance shall be specified.

Copyright © 1989 IEEE All Rights Reserved

Copyright The Institute of Electrical and Electronics Engineers, Inc.
Provided by IHS under license with IEEE
No reproduction or networking permitted without license from IHS
Not for Resale

4.10 Temperature Sensitivity

To measure temperature sensitivity, a bridge-balance setup shall be used with the amplifier placed in an environmental chamber, but with all other instruments kept outside. The bridge shall be balanced at V_m and room temperature. The temperature T shall then be changed in increments of 10 °C or less throughout the range to be covered. The unbalance shall be recorded at each temperature after equilibrium is established. Simultaneously, the dc output shall be measured and recorded. The dc measurements indicate the dc-offset sensitivity vs changes in temperature. A change in offset does not affect the bridge balance, but it does move the whole pattern up or down on the CRT screen. The cycling time shall be long enough to eliminate hysteresis. Each temperature test shall consist of at least one full cycle beginning and ending at room temperature, and the difference in readings between the start and finish shall be no more than one-fourth of the variation occurring in a contiguous temperature increment. The sensitivity shall be expressed in ppM/°C over a temperature range specified by the manufacturer, and the gain and shaping index at which the test was performed shall be stated.

4.11 Supply-Voltage Sensitivity

Using the same electrical setup as for measuring temperature stability, the sensitivity to power supply changes shall be determined. The supply buses shall be changed one at a time, and both gain and dc offset shall be determined by the method described in 4.10, in which changes in temperature in this instance are to be interpreted as changes in supply voltage. Supply voltage sensitivity shall be expressed in percent change per volt or in ppM per volt, and the gain and shaping index at which the test was performed shall be stated. A simple test fixture for changing the bus voltages is described in A4.11.

4.12 Crossover Walk

Ideally, the timing of the baseline crossing of a bipolar pulse (Fig 5) relative to the causative event is proportional to its rise time and invariant with its amplitude, making t_{xo} a useful timing marker. However, imperfections in the amplifier may cause t_{xo} to walk as the pulse height varies. Note that amplifier saturation ends the invariance; walk measurements are meaningful only within the amplifier's rated dynamic range.

A measuring setup consists of a rectangular-pulse generator, attenuator, the main amplifier, a crossover detector, and the oscilloscope. The oscilloscope sweep must be triggered from the generator at a high rate to produce a bright trace. The generator pulse width need be only slightly wider than the bipolar signal from the amplifier. A generator duty cycle of ≈10% is appropriate, but if there is any indication of a drift in crossover due to component heating, the duty cycle shall be reduced. The attenuator shall have one ×10 section permanently switched in to act as a buffer against changes in generator loading caused by the input impedance of the amplifier.

Crossover pickoff circuits are commercially available. If used, it and the attenuator shall be calibrated prior to measurements of crossover walk (A4.12). The null amplifier/limiter in a nonlinearity bridge also can be used as the crossover detector.

The measurement consists of first setting the amplifier output level at V_m, then switching in attenuator steps beginning with x√2 while recording the walk that appears on the CRT. Before data are recorded, offsets and threshold levels should be adjusted to minimize the walk over the dynamic range. However, none of the controls except the attenuator switches shall be moved during the final measurement. Except at the shortest shaping times, it will be necessary to use the delayed sweep to position the crossover point on the CRT screen.

If the null amplifier/limiter in a nonlinearity bridge is used as the crossover detector, the unused input should be left open, and the oscilloscope sensitivity should be set at 0.1 V/DIV. It will be found that with wide pulses or low pulse height, the angle at which the signal crosses the baseline on the CRT screen will become too low to establish t_{xo} with usable accuracy when the range of measurement becomes too great. This range will at best be 20:1. As more and more attenuation is switched in, it will be necessary to use extreme care in adjusting the offsets and in keeping the start of the CRT trace on the zero line. If the oscilloscope graticule has a row of open dots near the lower edge of the screen, accuracy will be improved if the baseline is made to fall on this line.

Copyright © 1989 IEEE All Rights Reserved

Copyright The Institute of Electrical and Electronics Engineers, Inc.
Provided by IHS under license with IEEE
No reproduction or networking permitted without license from IHS Not for Resale

In specifying the crossover walk, the gain and shaping index at which the measurement was made shall be given, and the walk figures shall be corrected for the walk in the attenuator and crossover-pickoff detector. Also, the walk vs duty cycle shall be specified.

It is recommended that crossover walk vs amplifier gain setting also be specified.

5. Preamplifier Measurements

The parameters of interest are charge sensitivity, charge sensitivity vs external capacitance C_t, rise time t_r, t_r vs C_t, t_f, noise performance, size of the internal test capacitor C_c, dynamic range, count-rate limit, and differential nonlinearity L_D. The test setup of Fig 3 can be used to measure all parameters except L_D.

A rectangular-pulse generator shall be used in the measurement of t_f and, in 2-stage preamplifiers, in the setting of the preamplifier's internal P/Z control. For other measurements, a tail-pulse generator can be used, but the rectangular-pulse generator is preferred.

5.1 Measurement of Charge Sensitivity

Charge sensitivity can be measured at the output of an isolated preamplifier or at the output of the main amplifier. Measurements on an isolated preamplifier can be misleading ballistic deficit will cause a signal loss in the main amplifier by an amount which depends on the shaping constant and detector capacitance. Because of this, charge-sensitivity of a preamplifier shall be determined by measurements at the output of the main amplifier.

If the preamplifier has two stages, the P/Z compensation between stages shall be adjusted as a prelude to further measurements. This adjustment must be made with the oscilloscope connected to the output of the preamplifier (A4.2 and A4.2.1).

Next, gain A of the main amplifier should be set to a convenient value (such as ×10). The method described in 4.4 can be used. In setting the gain, the attenuator shall be considered as replacing the preamplifier, that is, the output impedance and the terminating conditions of the attenuator shall be the same as would exist for the preamplifier in normal operation.

After setting the main-amplifier gain, connect the generator to the capacitor box and adjust the P/Z compensation if necessary. Then set the generator to produce 5.00 V at the output of the main amplifier. The charge sensitivity will be $5/AV_{in}C_c$ volts per coulomb.

Charge sensitivity shall be specified at a particular detector capacitance (which may be simulated) and at a main-amplifier shaping index consistent with the expected principal use of the preamplifier. That shaping index shall be specified.

5.1.1 Charge Sensitivity vs Capacitance

In a continuation of the preceding test, the change in charge sensitivity shall be established while C_t is varied over the capacitance range for which the preamplifier was designed. The measurement can be made with a nonlinearity bridge or with an MCA having at least 1000 channels.

5.1.2 Charge Sensitivity vs Capacitance, MCA Method

In the MCA method, C_t is set at its minimum value, then the amplifier output pulse is located near full scale of the MCA, using either the pulse generator controls or amplifier gain controls to move the peak location. Finally, C_t is increased a step at a time while noting the change in peak-channel location.

Copyright © 1989 IEEE All Rights Reserved

Copyright The Institute of Electrical and Electronics Engineers, Inc.
Provided by IHS under license with IEEE
No reproduction or networking permitted without license from IHS Not for Resale

5.1.3 Charge Sensitivity vs Capacitance, Bridge-Balance Method

In the bridge-balance method (see 3.8), the measurement can be made in either of two ways:

1) Balancing the bridge at one end of the C_t range, then noting the change in bridge output voltage that occurs as C_t is varied.
2) Balancing the bridge at the high end of the C_t range with the generator also near the top of its range, then readjusting the generator voltage to keep the bridge in balance as C_t is switched to lower settings. The change in generator voltage must be recorded at each step.

5.1.4 Charge Sensitivity vs Capacitance, Specifications

From the numbers obtained, it is recommended that a table or graph be prepared of the charge sensitivity vs C_t, normalized to the value at zero pF. The specifications shall include the change in charge sensitivity occurring at the maximum capacitance for which the preamplifier was designed; if the change is greater than 1% at this capacitance, the change for at least one intermediate capacitance value shall be included. The specification shall indicate whether or not the rise time was optimized at each of the data points, and the shaping index at which the measurements were made shall be given.

5.2 Size of the Internal Test Capacitor

After measuring the charge sensitivity, transfer the generator signal to the preamplifier test-input terminal and readjust the generator for the same output signal as was obtained when using the capacitor box. The size of the internal test capacitor $C_{c\ int}$ can be computed from $C_{c\ int} = V_{in1.}C_c/V_{in2.}$, where $V_{in1.}$ and $V_{in2.}$ are the input signals before and after transfer, respectively. It is recommended that the nominal value of the internal test capacitor be specified with an accuracy of ±1%.

5.3 Rise Time vs Capacitance

In the measurement described in 5.1.1, T_r vs C_t can be measured at the same time. If t_r vs C_t is specified, it shall be stated whether or not t_r was optimized at each capacitance increment. If t_r is adjustable, it is recommended that a graph or table be presented with two sets of data, one with t_r optimized at $C_t = 0$ (or the minimum capacitance for which the preamplifier was designed) but fixed thereafter, and another with t_r optimized at each incremental change of C_t.

5.4 Noise, Preamplifiers

The test setup of Fig 3 is required (without the bridge).

Prior to the test, the BLR masking effect, if present, shall be eliminated (A4.5), and a search for correlated noise shall be made (A4.5.1). The P/Z compensation shall be adjusted if necessary (A4.2 and A4.2.1).

With preamplifiers designed for use with nonmultiplying detectors, such as gridded ionization chambers, germanium, and silicon detectors, the noise shall be specified in eV or keV FWHM for the applicable detector.

For multiplying detectors such as scintillation and proportional counters, the noise shall be specified in equivalent coulombs rms. In some instances, the noise expressed in equivalent ion pairs rms may be desirable.

For preamplifiers not designed for use with a specific detector, the noise performance shall be specified for zero detector capacitance, maximum capacitance, and for several intermediate values.

Copyright © 1989 IEEE All Rights Reserved

--`,,`-`-`,,`,,`,`,,`---

Copyright The Institute of Electrical and Electronics Engineers, Inc.
Provided by IHS under license with IEEE
No reproduction or networking permitted without license from IHS Not for Resale

When changing the (simulated) detector capacitance for a sequence of noise measurements, the output pulse height shall be kept fixed throughout the run by readjustment of the amplifier gain at each change in capacitance. The shaping index and the generator setting shall be fixed throughout the sequence.

5.4.1 Noise, Preamplifiers for Germanium Detectors

A test procedure in which the voltmeter indication is in units of 100 eV FWHM per mV is recommended (see A5.4.1). In this procedure,

1) An average-responding voltmeter is recommended
2) $V_{in}C_c$ should be set to 0.985×10^{-14} C, (for example, 9.85 mV and 1.00 pF).
3) The amplifier gain should be set for $V_a = 5.00$V. A true rms meter can be used, but then $V_{in}C_c$ must be set at 1.11×10^{-14} C (for example, 11.1 mV and 1.00 pF).

Set up as described in 5.4, then:

a) Set the shunt capacitance C_t to one end of the desired range and adjust the generator and main amplifier to the settings described in 5.4.1. (For maximum accuracy in fixing the pulse amplitude, the attenuator switch settings should be such that the pulse-height dial can be positioned in the upper half of its range.)
b) Turn off the generator. If it is disconnected, a terminating resistor must be left in place at the input of the capacitor box to prevent external noise pickup.
c) Record the indication e_{no} of the ac voltmeter, which will be in units of 100 eV FWHM per mV.
d) Change C_t and repeat.

Note the comments in the last paragraph of 5.4.

5.4.2 Noise, Preamplifiers for Silicon Detectors

The procedure is the same as in 5.4.1, except that $V_a = 6.00$ V (A5.4.2). Alternatively, V_a can remain at 5.00 V, but $V_{in}C_c$ must be reduced to 0.833 x 10^{-14} C.

If a true rms voltmeter is used, $V_{in}C_{in}$ must be set at 0.887×10^{-14} C for $V_a = 6.00$ V, or, 0.739×10^{-14} C for $V_a = 5.00$ V.

As stated in 5.4.1, the units of ac voltmeter response for the measurements in this paragraph are 100 eV FWHM per mV, but for silicon rather than germanium detectors.

5.4.3 Noise, Units of Equivalent rms Charge and Equivalent rms Ion Pairs

Set $V_{in}C_e$ at 1.00×10^{-14} C (for example, 10.0 mV and 1.00 pF), and adjust the main-amplifier gain so that $V_a = 5.00$V. Then follow the procedure described in the last two paragraphs of 5.4.1.

To obtain the noise in units of equivalent input rms charge q_{ni}, use Eq 3 for a true rms voltmeter, or Eq 4 for an average-responding ac voltmeter (see A5.4):

$$q_{ni\ \mathrm{rms\ vm}} = 2.00 \times 10^{-18}\ \mathrm{C_{rms}/mV} \tag{3}$$

$$q_{ni\ \mathrm{ave\ vm}} = 2.26 \times 10^{-18}\ \mathrm{C_{rms}/mV} \tag{4}$$

To obtain the noise in units of equivalent rms ion pairs N_{ni} referred to the input, use Eq 5 for a true rms voltmeter, or Eq 6 for an average responding voltmeter (see A5.4):

Copyright © 1989 IEEE All Rights Reserved

Copyright The Institute of Electrical and Electronics Engineers, Inc.
Provided by IHS under license with IEEE
No reproduction or networking permitted without license from IHS Not for Resale

$$N_{ni\ \text{rms vm}} = 14.1 \text{ electrons rms/mV} \quad (5)$$

$$N_{ni\ \text{ave vm}} = 12.5 \text{ electrons rms/mV} \quad (6)$$

5.4.4 Correction for Main-Amplifier Noise

The measured preamplifier noise shall be corrected for the main-amplifier noise in the following way: after determining e_{no}, disconnect the preamplifier and terminate the input of the main amplifier with an impedance that is the same as the output impedance of the preamplifier. Record the new e'_{no}. The corrected noise due to the preamplifier alone is the quadratic difference $[(e_{no})^2-(e'_{no})^2]^{1/2}$.

5.5 Preamplifier Nonlinearity

The test described in this section is one of differential nonlinearity. The test setup is shown in Fig 9, and the test is implemented as follows:

1) A fixed charge is applied to the preamplifier to produce a pulse that is small compared with the preamplifier's dynamic range.
2) An adjustable direct current is injected into the gate of the input FET.
3) The output of the main amplifier is monitored with a nonlinearity bridge while the dc output voltage of the preamplifier is swung through its dynamic range by a variable current applied to the input of the FET. Within the preamplifier's linear range, the output pulse height should remain constant.

To apply the variable current referred to above, a resistor R'_f is added temporarily to the preamplifier. This resistor should approximate the size of the existing feedback resistor R_f. The current is adjusted by changing the setting of the potentiometer that is connected to the supply buses. The gate end of R'_f must be shielded from the surrounding components to avoid changing the preamplifier's charge sensitivity.

An appropriate pulse height at the output of the preamplifier is ≈0.2 V. For the initial balance, the dc output from the preamplifier should be at its normal operating level and the pulse output from the main amplifier should be its rated maximum V_m.

$$L_D = \frac{100\Delta V_o}{A_n V_m}\%$$

where A_n is the gain of the amplifier in the nonlinearity bridge.

It is recommended that L_D be specified for a stated $t_{1/2}$, stated dynamic range, and stated input capacitance.

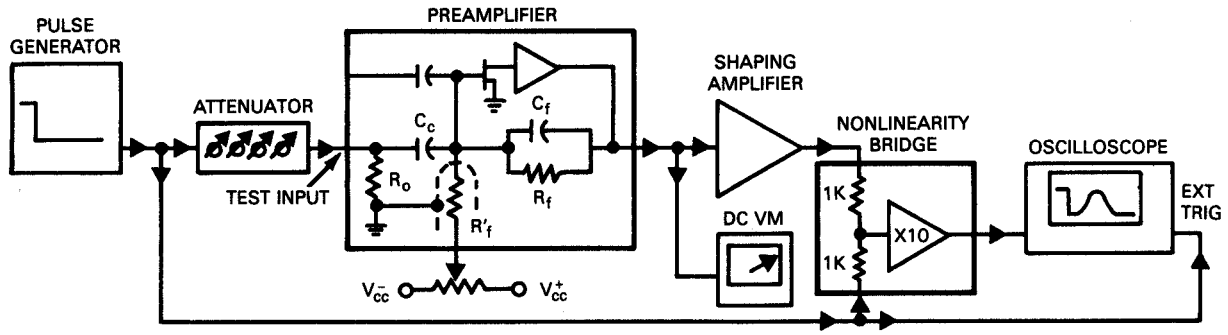

Figure 9—Test Setup for Measuring Preamplifier Differential Nonlinearity

Copyright © 1989 IEEE All Rights Reserved

Copyright The Institute of Electrical and Electronics Engineers, Inc.
Provided by IHS under license with IEEE
No reproduction or networking permitted without license from IHS
Not for Resale

5.6 Energy × Count-Rate Product (ECRP)

The counting rate in a spectrometer may be limited either in the preamplifier or in the main amplifier.

In the main amplifier, the duty cycle measured at the threshold level of the BLR (usually, at the $t_{.001}$ to $t_{.01}$ level) is the key factor: if too many pulses pile up, the charge in the memory capacitor of the BLR will not reset, and the BLR will lose control of the baseline. This phenomenon is nearly independent of pulse height, but depends on the counting rate, the design of the shaping network, and the design of the BLR. The duty-cycle limit may be as high as 3.0 (see Fig 2).

In preamplifiers, the count-rate limit also depends on the energy, that is, on the product of the energy and the count-rate. In the following paragraphs, it is assumed that all of the events are monoenergetic. Except for α-particle spectra, this is an unusual situation, with the result that computations of Energy × Count-Rate Product (ECRP) are pessimistic, that is, the count rate at which saturation occurs may be three or more times higher than the computed value. However, in this standard, the worst-case condition of a monoenergetic spectrum will be assumed and is the basis for the calculations and measurements to follow.

In a dc-coupled preamplifier with resistive feedback, the sum of the detector leakage current and the average current (caused by ionizing events) flowing through R_f determines the dc output of the preamplifier: when IR_f reaches the end of the dynamic range, the preamplifier saturates.

With a reset-type preamplifier, reset occurs before this can happen, and the limit is likely to be set by resolution-destroying pile-up in the main amplifier. Reset-type preamplifiers are not covered in this standard.

In an ac-coupled preamplifier with resistive feedback, the limit in pulsed-type operation (as occurs in pulsed accelerators) is essentially the same as that for the dc-coupled case because the preamplifier will block before the charge on the coupling capacitor can accommodate to the sudden change in counting rate. If the rate increases gradually, the upper limit is determined by the statistical fluctuation of the pile-up. This last case and the dc-coupled case are addressed here. In the latter, R_f must be known; in the former, the decay constant R_fC_f must be known. Component values specified by their manufacturers cannot be depended on: C_f because it is so low that stray capacitance cannot be ignored, and R_f because if the input stage is cooled, R_f may change from its room-temperature value in an unpredictable way. Methods for making measurements in place are described below.

5.6.1 Determination of C_f.

In a single-stage preamplifier, $C_f = 1/(\text{charge sensitivity})$, in units of volts and farads. In a 2-stage unit, the same is true of the input stage; the oscilloscope must be connected to the output of the first stage and the measurement made as described in 5.1. If the input is not accessible because of encapsulation with a silicon or germanium detector, a radioactive source containing at least one peak of known energy must be used as the signal source. In this situation, the measurement can be made at the output of the main amplifier: measure the pulse height V_a corresponding to the energy E of the peak and compute $C_f = AqE/\varepsilon V_a$, where A is the gain between the output of the charge-sensitive stage and the output of the main amplifier (not the preamplifier), and the other terms are as defined in 1.3.

5.6.2 Determination of R_fC_f.

If the time constant is measured, R_f can be computed using the value of C_f determined above. The method described here is applicable to all measurements of decay time constant, and is based on the principle that the halving time of a single-time-constant exponential decay is independent of where the measurement begins (a parallel exists in the measurement of half lives). Because of its simplicity and accuracy, this method is recommended over that of measuring the 90-10% decay time. A rectangular-pulse generator shall be used for the signal source because a tail-pulse generator will introduce a second time constant.

1) Set up the system shown in Fig 3, but connect the oscilloscope to the output of the charge-sensitive stage (the nonlinearity bridge, voltmeter, and main amplifier are not required).
2) Switch in a ×√2 and a ×10 attenuator position (or a ×8 if available), but none of the others.

Copyright © 1989 IEEE All Rights Reserved

Copyright The Institute of Electrical and Electronics Engineers, Inc.
Provided by IHS under license with IEEE
No reproduction or networking permitted without license from IHS Not for Resale

3) With the baseline near the lower edge of the CRT screen, adjust the controls of the generator or the oscilloscope, or both, to obtain a decay curve which is approximately full-screen vertically.
4) Switch out the ×√2 attenuator step and approximation the curve so that it intersects a crossing of two major graticule lines (arrowed circle on the ×8 curve of Fig 10. Reducing the attenuation at this step is solely to avoid the region where rise time and decay time interact). The curve should cross at an angle of ≈45°. If the curve can be positioned to simultaneously cross two intersections (circle and square in the figure), so much the better.
5) Switch out a ×2 attenuator step without moving any other control.

The curve will move towards the right (the ×4-curve in the figure). The horizontal graticule line(s) passing through the initial reference point(s) now represent 50% of the former pulse height (because the curve has expanded off screen in a vertical direction by a factor of ×2), and the time shift along the horizontal line(s) represents

$$\frac{R_f C_f}{\ln 2} = 1.443 \cdot R_f C_f$$

In the illustration, the shift is 0.28 ms,

$$R_f C_f = 1.443 \times 0.28 = 0.404 \text{ ms}$$

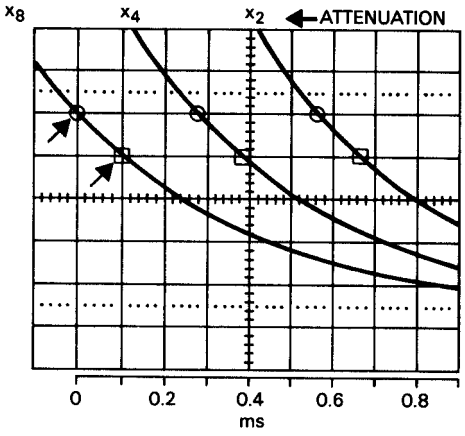

Figure 10—Curves of Exponential Decay. Although three curves are shown, only one at a time is visible on the CRT screen

The same result should be obtained if an additional x2 step is switched out (see x2 curve).

Note the following:

a) The initial zero and peak height levels are immaterial.
b) The sweep trace in the absence of a signal must be exactly parallel to the horizontal graticule lines (this restriction can be removed if a calibrated delayed sweep is used to move the second intersection to the position of the first, using the delay dial to indicate the time shift).
c) The oscilloscope must not be overloaded to the degree that an error occurs when an attenuator position is switched out.
d) It is unnecessary that only ×2 switch positions be used: the multiplier on $R_f C_f$is

$$\left|\frac{1}{\ln M}\right|$$

Copyright © 1989 IEEE All Rights Reserved

Copyright The Institute of Electrical and Electronics Engineers, Inc.
Provided by IHS under license with IEEE
No reproduction or networking permitted without license from IHS
Not for Resale

where

M is the size of the attenuator step (or its reciprocal), for example,

$$\left|\frac{1}{\ln 4}\right| = 0.721,\ \left|\frac{1}{\ln 5}\right| = 0.621,\ \left|\frac{1}{\ln 10}\right| = 0.434,$$

etc.

The $R_f C_f$ product of the preamplifier under actual operating conditions shall be specified.

5.6.3 Count-Rate Limit, DC-Coupled Preamplifier

From the preceding measurements, R_f can be calculated.

With monoenergetic signals, the count-rate limit N_m is that at which the preamplifier output voltage reaches saturation:

$$N_m = 6.25 \times 10^{12} \frac{\varepsilon V_m}{E R_f} \tag{7}$$

where

ε is in eV
E is in MeV

Example: Germanium detector,

$V_m = 10\text{V}$
$E = 1\ \text{Mev}$
$R_f = 5 \times 10^9 \Omega$
$\varepsilon = 2.97\ \text{eV/ion pair}$

Substituting in Eq 7, the maximum count-rate N_m proves to be ≈37 000 c/s.

5.6.4 Count-Rate Limit, AC-Coupled Preamplifier

In an ac-coupled preamplifier, the average baseline remains at the zero count-rate level, but statistical fluctuations about the mean can cause pulses to saturate if the counting rate is high enough. By applying Campbell's theorem, it can be shown that the rms fluctuation of the baseline is:

$$v_{rms} = 1.6 \times 10^{-13} \frac{E}{\varepsilon C_f [n R_f C_f / 2]^{1/2}} \tag{8}$$

The fluctuations approximate a normal distribution when the mean spacing between pulses is short compared with $R_f C_f$.

The baseline will exceed V_m 1% of the time at 2.6σ, that is, at 2.6 V_{rms}. Using this factor and the above expression, the upper count-rate limit becomes

$$N_m \approx \frac{(1.2\ V_m^{\ 2}\ \varepsilon^2 C_f \times 10^{13})}{E^2 R_f}$$

Copyright © 1989 IEEE All Rights Reserved

Copyright The Institute of Electrical and Electronics Engineers, Inc.
Provided by IHS under license with IEEE
No reproduction or networking permitted without license from IHS
Not for Resale

Example: Germanium detector,

V_m = 10V

C_f = 1pF

E = 1 Mev

R_f = $5\times 10^9\Omega$

ε = 2.97 eV per ion pair

Substituting in Eq , the maximum rate proves to be $\approx 2 \times 10^6$ c/s. This is over 50 times higher than the dc limit for the same operating parameters.

The energy × count-rate product (ECRP) of a preamplifier for which 1% of the pulses exceed the saturation level shall be specified. In the case of an ac-coupled preamplifier, the specification shall include the ECRP for an instantaneous burst of pulses.

6. Biased Amplifier Measurements

After setting the bias control to zero, the gain of a biased amplifier (BA) can be measured by the method described in 4.4, using a pulse generator and shaping amplifier as a signal source.

The bias control can be calibrated against the dial of a pulse generator if the direct output of that generator is used as the signal source (with no intervening amplifier). The two dial settings should match when the output signal from the BA just emerges from the baseline.

Gain and bias specifications shall be given, and it is recommended that tolerances for the dial calibration be given as well.

Because the demand on slew rate in the amplifier stage of a BA is greater than in the stages of a shaping amplifier, the likelihood of nonlinearity is also greater. For example, if the BA is operating at a gain of ×10 on 9 V pulses from the main amplifier, the width of the shaped pulse at this level is ≈1/7th its width at the 1% level, and the slew rate must be approximately seven times greater.

6.1 Nonlinearity, Biased Amplifier

In the method described here, a nonlinearity bridge is used, with one input driven by a reference biased amplifier (RBA) and the other input by the BA under test. The setup is shown in Fig 11. A suitable RBA is described in A6.1. What makes this method viable is that the RBA receives an approximately flat-topped signal directly from the signal generator; the delay between the onset of the generator signal and the peak of the main-amplifier output pulse allows the RBA to settle before the peak arrives, greatly lowering the slew-rate requirement.

For a given shaping index, the most stringent operating conditions for the BA occur:

1) At its maximum gain
2) With the bias adjusted to produce V_m
3) With the shaping amplifier that precedes it also operating at V_m

Copyright © 1989 IEEE All Rights Reserved

Copyright The Institute of Electrical and Electronics Engineers, Inc.
Provided by IHS under license with IEEE
No reproduction or networking permitted without license from IHS Not for Resale

The region near V_m is the one in which the main amplifier is most likely to show differential nonlinearity, and since this will affect the accuracy of the test, it is important that a highly-linear main amplifier be used as part of the setup.

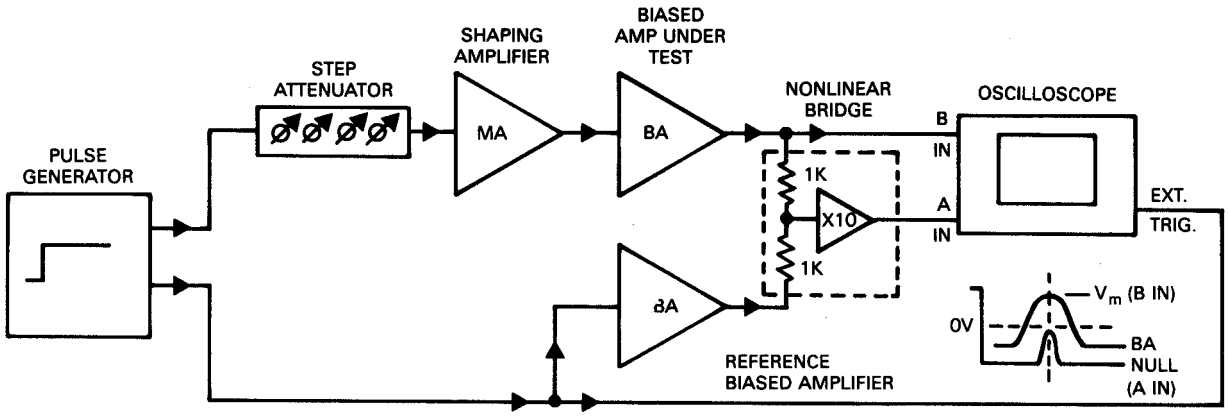

Figure 11—Test Setup for Measuring Nonlinearity of a Biased Amplifier

Using the preceding criterion,

a) Set the shaping amplifier for its longest shaping time.
b) Set the sensitivity of the oscilloscope A-input to 0.2 V/DIV and the B-input to 2 V/DIV.
c) With signal polarities as shown, set the generator and the three amplifiers at V_m as indicated on the oscilloscope, changing its connections as needed.
d) Operate the shaping amplifier below its noise transition gain for best possible SNR. The gain of the RBA and the BA should be nearly the same.
e) Use the B channel of the oscilloscope to observe the signal from the BA, and the A channel to observe the output of the bridge.
f) Adjust the bias of the RBA to get the bridge output signal ΔV_{br} near zero volts (which should be halfway between the saturation levels).
g) Slowly reduce the generator signal while observing the peak of ΔV_{br}. If it moves in the same direction as the signal from the BA, decrease its gain (or increase the gain of the RBA) and repeat.

The final adjustment for obtaining a stationary signal over the widest possible amplitude range should be made with the fine-gain control of the RBA. (It takes patience to find the final setting.)

Note that the nonlinearity referred back to the main amplifier is L_I/A_{BA}, where A_{BA} is the gain of the BA. If the gain is high, ($\approx\times10$), the integral nonlinearity of the BA approximates a differential nonlinearity measurement of the main amplifier. As stated earlier, it is important that a highly linear main amplifier be used for the test, otherwise nonlinearity ascribed to the BA may actually be due to the main amplifier that drives it.

Repeat the test for shorter shaping times.

The nonlinearity test shall be carried out with the condition that when the BA is operating at its maximum rated output voltage, the main amplifier is operating at its maximum rated output voltage. The nonlinearity shall be expressed as a percentage of V_m. The upper and lower limits of the dynamic range over which that nonlinearity applies shall be specified. The lowest $t_{1/2}$ of the shaping amplifier shall be stated for which the nonlinearity specification applies.

Copyright © 1989 IEEE All Rights Reserved

Copyright The Institute of Electrical and Electronics Engineers, Inc.
Provided by IHS under license with IEEE
No reproduction or networking permitted without license from IHS
Not for Resale

7. BIBLIOGRAPHY

[B1] BROWN, W. L., Higinbotham, W. A., Miller, G. L., and Chase, R. L. Semiconductor Nuclear Particle Detectors and Circuits, National Academy of Sciences, Pub no 1593, Washington, DC, 1969.

[B2] GILLESPIE, A. B. *Signal, Noise and Resolution in Nuclear Counter Amplifiers*, McGraw-Hill Book Co, New York, NY, 1953.

[B3] GOULDING, F. S. Pulse Shaping in Low-Noise Nuclear Amplifiers, A Physical Approach to Noise Analysis, *Nuclear Instruments and Methods*, 100, 493, 1972.

[B4] KOWALSKI, E. *Nuclear Electronics*, Springer Verlag, New York, 1970.

[B5] WALTER, F. J. Characterization of X-Ray Energy Spectrometers, ASTM Special Technical Publication 485, 1971.

Copyright © 1989 IEEE All Rights Reserved

Copyright The Institute of Electrical and Electronics Engineers, Inc.
Provided by IHS under license with IEEE
No reproduction or networking permitted without license from IHS Not for Resale

Annex A
(Informative)

(This Appendix is not a part of IEEE Std 301-1988, IEEE Standard Test Procedures for Amplifiers and Preamplifiers used with Detectors of Ionizing Radiation, but is included for information only.)

A2.2 Preamplifiers[5]

A voltage-sensitive preamplifier (VSP) and a charge-sensitive preamplifier (CSP) are illustrated in Fig A-1. The charge Q originates in the detector that has a capacitance C_d. The preamplifier input capacitance is C_{in}, which is an important parameter because it affects the SNR. The SNR is essentially the same for both configurations, but the way in which the signal and noise are separately affected depends on the difference between the "cold" and "hot" capacitances (see 1.2). Noise depends on cold capacitance, which is virtually the same for both units, while signal depends on hot capacitance, which is drastically different between the two: In the VSP, hot and cold capacitances are nearly alike, but because of the feedback to the signal terminal of the CSP, its hot capacitance is A_oC_f, where A_o is the open-loop amplifier gain. In the CSP, if $A_o = 10^4$ and $C_f = 1$ pF, hot $C_{in} = 0.01$ μF.

The effects of the configuration on the signal parameters are given in Table A-1 and in Eqs A-1–A-3. In the VSP, the output noise is nearly independent of C_{in}, but the output signal amplitude is inversely proportional to it.

In the CSP, when series noise controls, its rms value is directly proportional to C_{in}, but the output signal amplitude is nearly independent of it.

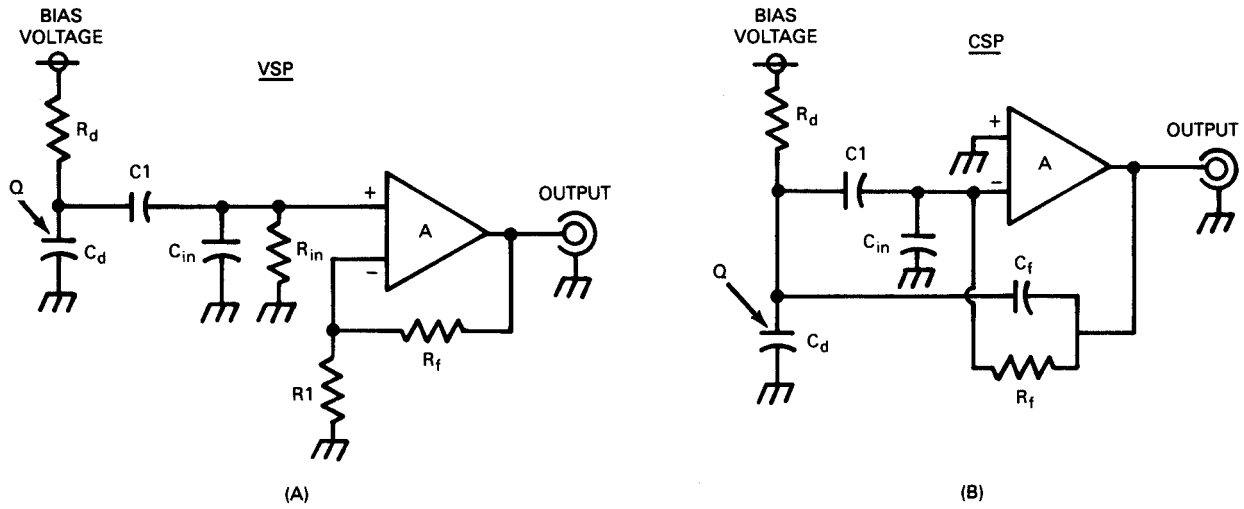

Figure A-1—(A) Voltage-Sensitive and (B) Charge-Sensitive Preamplifiers

Table A-1—Parameter Proportionalities (Approximate) in Voltage-Sensitive and Charge-Sensitive

[5] Section numbers in this appendix correspond to section numbers in the text.

Copyright © 1989 IEEE All Rights Reserved

Copyright The Institute of Electrical and Electronics Engineers, Inc.
Provided by IHS under license with IEEE
No reproduction or networking permitted without license from IHS
Not for Resale

Preamplifiers

Parameter	Voltage-Sensitive	Charge-Sensitive
Signal Polarity	Noninverting	Inverting
Signal Amplitude	$(C_a+C_{in}\ hot)^{-1}$	Independent of C_d
RMS Noise	Independent of C_d	$(C_d+C_{in\ cold})^{+1}$
Decay Time	$(C_d+C_{in\ hot})^{+1}$	Independent of C_d

The closed-loop output of the VSP is:

$$V_a = \frac{Q}{(C_d + C_{in\ hot})} A_{VSP}\ e^{[-t/(R_{in}\ \|\|R_d)(C_d + C_{in\ hot})]} \quad \text{(A-1)}$$

where

$$A_{VSP} = \frac{(R_f + R_1)}{R_1}$$

The closed-loop output of the CSP is:

$$V_a = \frac{Q}{C_f\left(1 + \frac{C_d}{AC_f}\right)} e^{[-t/R_f C_f(1 + C_d/AC_f)]} \quad \text{(A-2)}$$

where

A >> 1

If $C_d << AC_f$,

$$V_a = \frac{Q}{C_f} e^{[-t/R_f C_f]} \quad \text{(A-3)}$$

The term "gain" is applicable to a VSP (A_{VSP} in EQ A1), but not to a CSP. For the latter, the term "charge-sensitivity" must be used, which has the units of $1/C_f$ volts per coulomb and represents Q/C_f factor in EQ A3 for unit charge Q. (Charge sensitivity may also be expressed in units of volts per keV for specific, nonmultiplying detectors.) Gain and charge sensitivity can be compared, however, by setting Eqs A-1 and A-3 equal (disregarding the exponential terms because they signify the decay characteristics rather than the initial pulse height).

It is useful to note that if a test capacitor C_c is connected to the input of a CSP for the purpose of injecting a test charge (see Fig A-7), the impedances of C_c and C_f can be considered as the input and feedback impedances of an operational amplifier; in this instance, the concept of gain is valid, amounting to C_c/C_f volts per volt with respect to the pulse generator. If the two capacitors have the same value, which is often the case, the output voltage of the preamplifier is equal but opposite in polarity to that of the generator.

In both configurations, if the coupling capacitor $C_1 >> C_{in\ hot}$, C_1 may be considered as a short circuit regarding signal transmission. However, if C_f in the CSP is connected to the preamplifier side of C_1, V_a will be diminished by the factor $C_1/C_1 + C_d$).

Copyright © 1989 IEEE All Rights Reserved

Copyright The Institute of Electrical and Electronics Engineers, Inc.
Provided by IHS under license with IEEE
No reproduction or networking permitted without license from IHS Not for Resale

A2.3 Pulse Shaping Networks

Because of the long decay time in a preamplifier (as much as 5 ms), pulses pile up at unacceptably low counting rates. Also, short rise times and long decay times are linked to wide bandwidth and a high noise level. Through the use of a pulse-shaping network in the main amplifier, both the count-rate capability and the SNR are improved. The network comprises a "differentiator" to hasten signal recovery, and one to six "integrators" to slow the rise time. A single differentiator results in a unipolar pulse, two equal differentiators, in a bipolar pulse. The feedback network R_fC_f in the preamplifier constitutes an undesired differentiator that, in conjunction with the desired one, causes an undershoot of magnitude $\approx \tau_D/3R_fC_f$ and duration $\approx R_fC_f$, where τ_D is the differentiating time constant. This undershoot is eliminated by the pole/zero (P/Z) cancellation network, which may be manually adjustable or adjusted automatically by a circuit designed for that purpose.

The simplest shaping network is made up of resistors and capacitors, with *m* high-pass sections and n low-pass sections, all of the same time constant. The network is symbolized by $(CR)^m$ - $(RC)^n$. A unipolar pulse results from $m = 1$ and a bipolar pulse from $m = 2$. The response to a voltage step is $V_a = (x^n/n!)e^{-x}$ (where $x = t/RC$), which, although shaped like a Poisson distribution (an accidental similarity), is described as "quasi-Gaussian". Other networks are known as "sine^n" (which is also part of the quasi-Gaussian family), "quasi-triangular", and "cusp", where the nomenclature refers to the pulse shape. A comparison between shapes is shown in Figs A-2 and A-3. In Fig A-2, the scale is linear and shows the waveforms as they would appear on an oscilloscope. In Fig A-3, the vertical scale is logarithmic to show details of the pulse recovery in the region below 10% of peak height. The sine^n networks do not generate undershoots, but do produce secondary peaks (shown near $t = 3.5$); these are below 0.01% of the primary peak height and do not affect energy resolution to a noticeable degree.

Pulse parameters are given in Table A-2; the entries are arranged according to noise performance. In the equations below the table, the constants required to produce unit pulse height and unit width at $t = \pm 0.5$ are given in the CONSTANTS columns. The widths $t_{.001}$, $t_{.01}$, and t_p are given in the WIDTHS columns. The instant of pulse initiation on the time axis and, similarly, the instant at which the peak occurs, is given in the ZERO and PEAK columns. In the SYMMETRIES column, the numbers refer to pulse symmetry about the $t = 0$ line; peaking time t_p was doubled arbitrarily so that a perfectly symmetrical pulse shows a symmetry factor of 1.000 (cusp, triangle, and Gaussian). The symmetry factor $t_{.001}/t_{.01}$ gives an indication of how quickly the pulses leave and return to the baseline. The cusp is the worst in this regard, and the triangle the best. The FIGURE of MERIT, which was the criterion for arranging the order in the table, is the mean proportional between the rms series and parallel noise components and is characteristic of the particular network. The separate noise components (last two columns) change with the pulse width, but the products do not. The parallel noise is virtually constant for the Gaussian and quasi-Gaussian (sine^n and CR - $(RC)^n$) networks, and varies for the other four. With the exception of the cusp and triangle, the series noise varies inversely as the symmetry factor $2t_p/t_{.01}$. An *n*th-order sine^n network, while requiring the same number of resistors and capacitors as an nth-order CR -$(RC)^n$ network, yields better symmetry, lower series noise, and shorter resolving time ($t_{.001}$ or $t_{.01}$) than the latter. The contrast is most noticeable between the sine^4 and CR - $(RC)^6$ networks, where the figures of merit are the same, but where the 4th-order sine^n network has shorter resolving time than the 6th-order CR - $(RC)^2$ network.

The quasi-triangular network is obtained from the sine^6 network by summing the weighted outputs of the first two integrating pairs with that of the third. The figure of merit is only 0.3% better than that of the progenitor pulse, but the resolving time at $t_{.001}$ is nearly 10% better.

A3.2.1 Mercury-Relay Tail-Pulse Generator

Probably the simplest precision pulse generator that can be built is one in which a relay with mercury-wetted contacts is the active switching element (Fig A-4). During half of the cycle, the storage capacitor is charged via the relay from the precision pulse-height potentiometer. During the other half, the capacitor is discharged into the load to produce the tail pulse. The surface tension of the mercury film maintains conductivity across the contacts during mechanical bounce, but the contact design must not allow bridging during the transition between charge and discharge. Rise times ≤5 ns are common, but because of the relay, the repetition rate is limited to ≈100 pulses per second. To assure charging of the storage capacitor to within 0.1% of the supply voltage during each cycle, the half-period of the generator must be ≥7 time constants of the charging circuit. If a similar time is not allowed for the discharge, the sudden drop in output

Copyright © 1989 IEEE All Rights Reserved

Copyright The Institute of Electrical and Electronics Engineers, Inc.
Provided by IHS under license with IEEE
No reproduction or networking permitted without license from IHS
Not for Resale

voltage at the end of the cycle will cause a reverse-polarity pulse to appear in the amplifier under test. This will not cause a measurement error if the amplifier has fully recovered before the next pulse arrives.

Electronic generators are commercially available that operate at higher repetition rates than is possible with relay-type generators.

A3.2.2 Rectangular-Pulse Generators

In principle, a relay can be used to generate fiat-topped pulses, but at this writing, there are no commercially-available generators of this type. There are many all-electronic rectangular-waveform generators available, but only those designed specifically for the tests described in this Standard are suitable. The principal shortcomings of general-purpose generators are ringing and sag during the first several microseconds following a waveform transition, lack of pulse-height stability, and lack of precise pulse-height control.

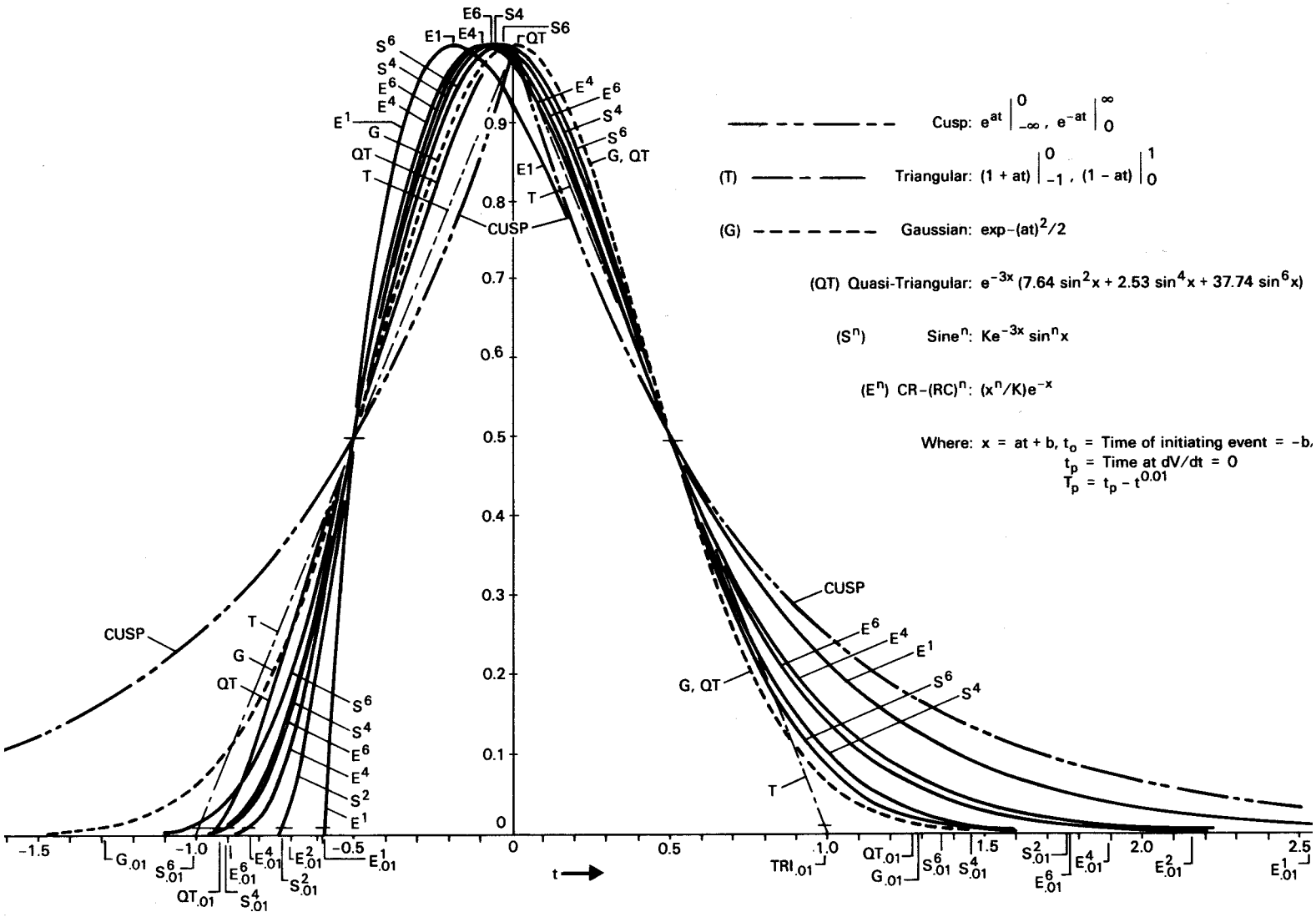

Figure A-2—Step-Function Responses of Pulse-Shaping Networks, Linear Scale. All pulses widths are normalized to $t_{1/2}$

Copyright © 1989 IEEE All Rights Reserved

Copyright The Institute of Electrical and Electronics Engineers, Inc.
Provided by IHS under license with IEEE
No reproduction or networking permitted without license from IHS
Not for Resale

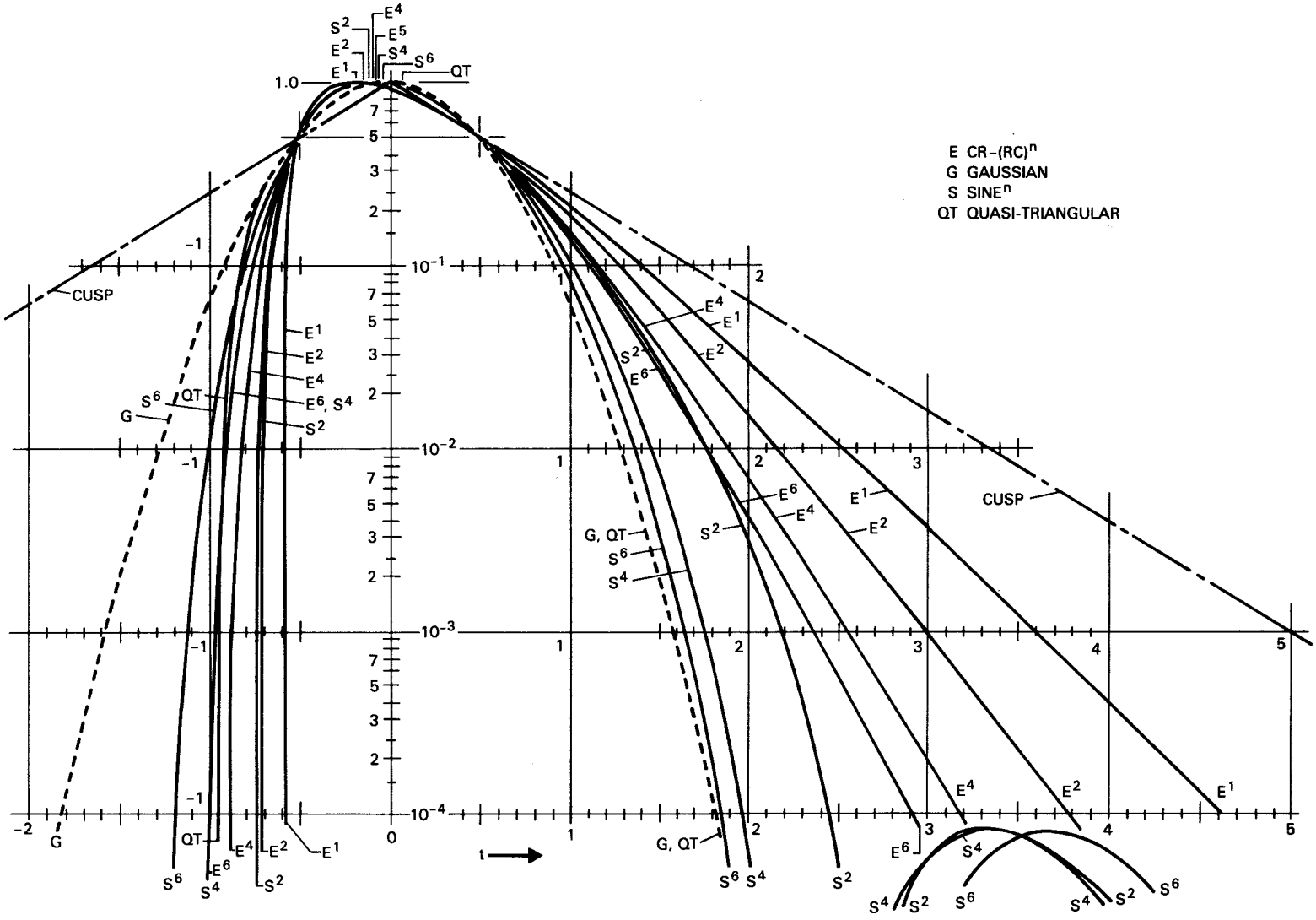

Figure A-3—Step-Function Responses of Pulse Shaping Networks, Semilog Scale. All pulse widths are normalized to t1/2

Copyright © 1989 IEEE All Rights Reserved

Copyright The Institute of Electrical and Electronics Engineers, Inc.
Provided by IHS under license with IEEE
No reproduction or networking permitted without license from IHS
Not for Resale

Table A-2—Pulse Shaping Networks, Figure of Merit, and Pulse Width Parameters

	Constants			Widths			Zero	Peak	Symmetries		*F.O.M.	rms Series	rms Par
Network	K	a	b	$T_{.001}$	$T_{0.01}$	T_p	t_o	t_p	$\underline{2T_p}T0.01$	$\underline{T_{.001}}T0.01$	$\sqrt{e_{ns}e_{np}}$;	e_{np}	e_{ns}
Cusp	-	1.3863	-	9.966	6.242	1.956	∞	0	1.000	1.500	1.0000	1.1774	0.8493
Triangle	-	1.0000	-	1.998	1.980	0.990	-1.000	0	1.000	1.009	1.0746	1.4142	0.8165
Gaussian	-	2.3546	-	3.157	2.578	1.289	∞	0	1.000	1.225	1.1196	1.4446	0.8676
Quasi-Δ	-	1.0383	0.9992	2.514	2.199	0.940	-0.962	0.0147	0.855	1.143	1.1322	1.4870	0.8621
Sine^6	54.102	0.8478	1.1374	2.771	2.376	0.978	-1.342	-0.0366	0.823	1.166	1.1354	1.4868	0.8671
Sine^4	39.427	0.9278	0.9814	2.736	2.360	0.848	-1.058	-0.0583	0.718	1.159	1.1481	1.5203	0.8670
Sine^2	18.966	0.9195	0.6918	2.936	2.489	0.614	-0.752	-0.1129	0.492	1.179	1.2000	1.6602	0.8674
CR.(RC)^6	115.65	5.8052	6.4609	3.340	2.671	0.816	-1.130	-0.0794	0.611	1.251	1.1481	1.5189	0.8678
CR.(RC)^4	4.6889	4.7551	4.4603	3.432	2.719	0.729	-0.938	-0.0968	0.537	1.262	1.1636	1.5599	0.8679
CR-(RC)^2	0.5413	3.3947	2.4586	3.701	2.858	0.567	-0.724	-0.1351	0.397	1.295	1.2156	1.7018	0.8683
CR-(RC)^1	0.3679	2.4464	1.4552	4.183	3.121	0.407	-0.594	-0.1861	0.261	1.340	1.3592	2.1258	0.8690

*Figure of Merit

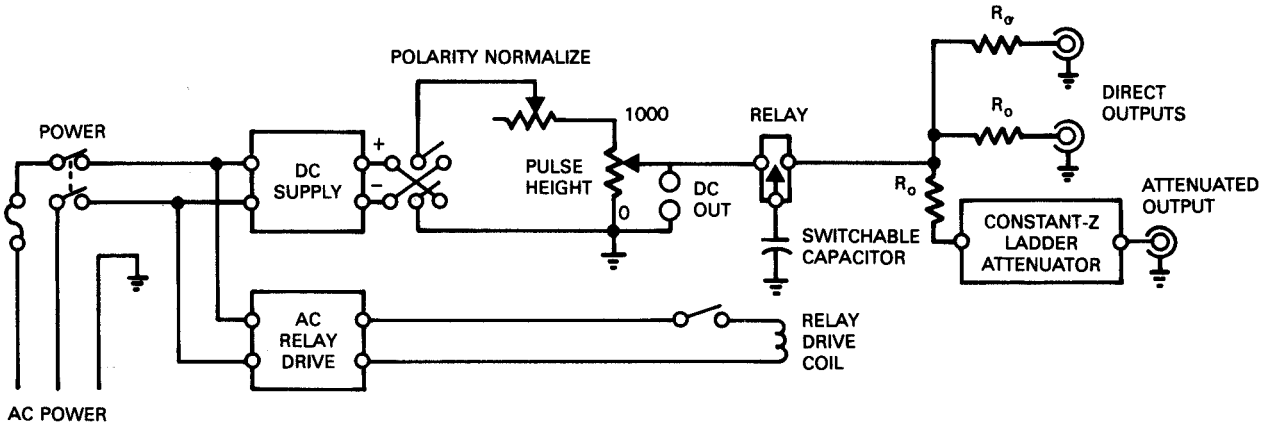

Figure A-4—Tail-Pulse Generator with a Relay as the Switching Element

A3.4 Calibration of C_c.

A popular size for C_c is 1 pF (see Fig 3, main text), and is the assumed value in the following text.

The important parameter of C_c is its capacitance between terminals, not the parasitic capacitance to ground from each terminal. Ordinarily, the calibration requires a wide-range, 3-terminal bridge, but the following procedure allows the use of the more commonly available 2-terminal bridge:

A larger capacitor (≈100 pF) which is within the high-accuracy range of a low-cost 2-terminal bridge is measured first and serves as an intermediate standard. Then, that capacitor and the "unknown" 1 pF capacitor are connected to the input of a preamplifier and compared. The first task is to measure the intermediate standard.

Copyright © 1989 IEEE All Rights Reserved

Copyright The Institute of Electrical and Electronics Engineers, Inc.
Provided by IHS under license with IEEE
No reproduction or networking permitted without license from IHS
Not for Resale

Mount a low-loss 100 pF capacitor in a completely shielded container with BNC connectors at both ends. (Some porcelain and polystyrene capacitors are physically small enough to fit into a pair of UG-88C/U BNC connectors mounted back-to-back. The flange of the cable nut can be sawed off and the threaded portion used to join the connector bodies).

The architecture of a conventional bridge is shown in Fig A-5. The C_c fixture is connected to the bridge through short shielded cables. The bridge terminals must be completely shielded from each other, and all shields must be grounded to the case of the bridge. After the measurement is made, C_c is disconnected (leaving the connecting cables in place) and the bridge rebalanced to determine the offset error, which is then subtracted from the preceding measurement. It might seem that the parasitic capacitance due to the cables will cause an error, but

1) the capacitance to ground across the detector is not part of the measurement, and
2) the capacitance to ground across the 0.1 uF standard (within the bridge assembly) is so low (<20 pF) as to produce a negligible error. In effect, a 3-terminal measurement has been made.

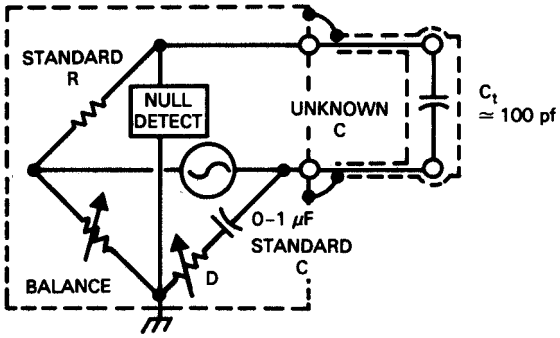

Figure A-5—Capacitance Bridge

The next step is to connect the test setup of Fig 3 (main text, without the nonlinearity bridge). Both the 100 pF intermediate standard and the capacitor box containing the "unknown" 1 pF capacitor should be connected to the preamplifier via a tee connector as shown in Fig A-6.

Then,

1) Connect the generator to the input of C_c, and terminate the input of the intermediate standard C_2 in 50 Ω.
2) Adjust the generator and amplifier controls for a pulse height of precisely 5.00 DIV on the CRT, and record the generator voltage and attenuator settings.

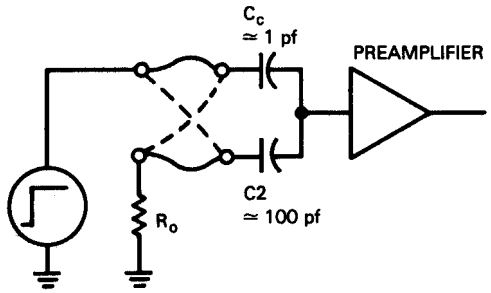

Figure A-6—Test Setup for Calibrating C_c

3) Interchange the input connections to the two capacitors.
4) Without touching the amplifier or oscilloscope controls, reset the generator dial and attenuator to again produce the 5.00 DIV pulse height, and record the new settings.

Copyright © 1989 IEEE All Rights Reserved

Copyright The Institute of Electrical and Electronics Engineers, Inc.
Provided by IHS under license with IEEE
No reproduction or networking permitted without license from IHS
Not for Resale

To produce the same output voltage, the input charge before and after the interchange must have been the same. That charge is $V_1C_c = V_2C_2$. Since the two voltage settings and C_2 are known, the unknown C_c can be computed.

The error in reading the pulse height on the CRT screen can be virtually eliminated by using a nonlinearity bridge to compare the peak of the amplifier output pulse with a fixed dc voltage. The RLC bridge contributes its error (which can be obtained from the instruction manual for the bridge), as does the step attenuator and pulse-height dial in the generator (because they affect the ratio of the two voltages). Next, if C_c is mounted in BNC connectors as suggested earlier, the unavoidable rotation of the end rings with respect to the bodies of the connectors will cause a variation due to eccentricity of the mechanical assembly. This last effect may generate an error of 1%, but it is usually less. It can be checked during the measurement. Finally, see 3.1 regarding errors due to faulty connectors.

It might seem that C_c must be small compared with the input capacitance of the preamplifier if the charge transfer is to be exactly V_pC_c. That's not the case. In Fig A-7, let Q be the charge from the detector and let C_{in} be the input capacitance of the preamplifier. The voltage developed at the input node due to the detector is $Q/(C_c + C_{in})$. The voltage due to the generator is $V_pC_c(C_c + C_{in})$. Equating the two voltages, it can be seen that the denominators of the expressions cancel, leaving $Q = V_pC_c$, independent of C_{in}.

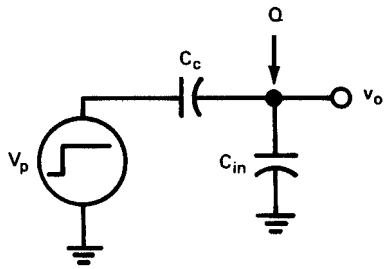

Figure A-7—Test Input to a Preamplifier

The internal resistance of the generator affects the rate of charge transfer, but not the final value. With 50 Ω and 1 pF, the time constant of the transfer is 50 ps.

A3.6 Average-Responding AC Voltmeter, Average-to-RMS Correction

The indication of an average-responding voltmeter calibrated for sine-wave response must be multiplied by $2/\sqrt{\pi} = 1.1284$ to obtain the rms level of a random-noise signal exhibiting a normal distribution. This factor is arrived at as follows:

Average-responding voltmeters are calibrated to read the rms value of a true sine wave. The ratio of rms to average is $(\pi/4)\sqrt{2} = 1.1107$, which must be divided into the indicated voltage to convert back to average. The ratio of rms to average for a normal distribution is $\sqrt{(2/\pi)} = 0.7979$, which also must be divided into the rms value to obtain the average. The reciprocal of the product of these divisors gives the multiplier $2/\sqrt{\pi} = 1.1284$.

A3.6.1 AC Voltmeter, Bandwidth Limiting

Regarding the measurement of noise, the effect of high-frequency roll-off of an ac voltmeter is equivalent to adding RC sections to the shaping network of the main amplifier; the meter will indicate less than the true noise level. The error will be greater for the series-noise component than for the parallel noise component. For a $CR\text{-}(RC)^4$ network, calculation shows that BW x $t_{1/2}$ must be $\geq 3.8/\sqrt{\theta}$ for the series noise component, and $\geq 1.6/\sqrt{\theta}$ for the parallel, where BW is the meter bandwidth in MHz, $t_{1/2}$ is in μs, and θ is the permissible error in % (in the range 0.1-10%).

Copyright © 1989 IEEE All Rights Reserved

Copyright The Institute of Electrical and Electronics Engineers, Inc.
Provided by IHS under license with IEEE
No reproduction or networking permitted without license from IHS Not for Resale

Example 1: 10 MHz meter bandwidth, 2% permissible error in a series-noise measurement. What is the shortest permissible shaping index?

$$t_{1/2} = \frac{3.8}{(\sqrt{2 \times 10\ \text{MHz}})} = 0.27\ \mu\text{s}$$

Example 2: 200 kHz cutoff, series noise.

Permissible shaping index for a 1% error is

$$t_{1/2} = \frac{3.8}{(\sqrt{1 \times 0.2\ \text{MHz}})} = 19\ \mu\text{s}$$

This relatively low cutoff frequency is often found in low-cost digital multimeters; they are suited for noise measurements only with relatively slow amplifiers.

The preceding formulas were derived on the basis of an ac voltmeter having three, equal-valued RC sections determining the -3 dB cut-off frequency. The formula is conservative; bandwidth specifications of ac voltmeters are usually based on the -0.5 dB limits. In one popular true-rms meter, the rated frequency response is 10 MHz, but a 22 MHz cutoff network (-3 dB limits) matched the meter's measured frequency response within ±1.5 dB from 10 MHz-65 MHz.

A3.6.2 AC Voltmeter Calibration

Because ac voltage standards are are not commonly available in small laboratories, a method of checking the accuracy of an ac voltmeter against a dc standard is useful. This can be done with two instruments commonly available: a square-wave generator with its baseline at 0 V dc, and a dc DVM. The method is based on measuring the output of the square wave with both the dc DVM and the ac voltmeter. With a full-wave, true rms meter, the two readings should agree because the average and rms values of a square wave are the same. With a full-wave, average-responding ac voltmeter calibrated for sine-wave signals, the square wave should be adjusted to produce $(2\sqrt{2})/\pi = 0.9003$ V on the DVM display for a 1.000 V indication on the ac voltmeter. Three conditions must be met:

1) The rise and fall times of the generator must occupy less than 1% of the period (that is, the period must be long compared with the rise time)
2) The ac signal must not interfere with the operation of the DVM (which can be avoided by interposing a 5 kΩ, 1 μF RC low-pass filter between the generator and the DVM)
3) The square wave must have a duty cycle of 50.0%.

This last requirement can be checked with an oscilloscope as follows:

a) Adjust the instruments to produce a half period of the square wave which is vertically centered on the screen and occupies nearly all of its horizontal width, with the leading and trailing edges accurately centered on vertical graticule lines.
b) Switch the sweep trigger polarity so that the polarity of the half period is reversed. If the duty cycle is precisely 50.0%, the widths of the half periods will not change when their polarities are reversed, otherwise they will.

A3.8 Nonlinearity Bridge

The circuit diagram of a practical bridge with a gain-of-ten amplifier is shown in Fig A8. Semiconductor characteristics are listed at the end of this section. It is recommended that the circuit be built into a box small enough to be attached directly to the oscilloscope input connector. The linear range is ≈0.55 V, and saturated output is ≈0.9 V. Rise time is under 20 ns if the unit is attached directly to the oscilloscope input terminal, approximately twice that if

Copyright © 1989 IEEE All Rights Reserved

Copyright The Institute of Electrical and Electronics Engineers, Inc.
Provided by IHS under license with IEEE
No reproduction or networking permitted without license from IHS Not for Resale

a 1 m connecting cable is used. The calibration factor for measuring integral nonlinearity is 0.001ΔV%, where ΔV in mV is the change in null signal measured at the output when V_m is 10 V, that is, a 100 mV change at the output indicates an integral nonlinearity of 0.1% over an amplifier swing of 10 V.

With switch S1 in the ADJUST position, the bridge amplifier is disconnected and the bridge "gain" is ×0.5, allowing a quick trial balance to be obtained; in this position, the active bridge arms are R1 and R2. In the USE position, the bridge amplifier is connected; the active bridge arms become R4 and R5.

The bridge amplifier contains two inverting stages with gains of 1.33 and 7.5, respectively, for a total gain of ×10. This combination of gains proved to be optimum for speed of response. The auxiliary amplifier stages comprising the two halves of IC3 reduce the offset voltages inherent in IC1 and IC2, but the ZERO adjustment that is shown is necessary to compensate for offsets in the signal source. The output is linear to ≈0.55 V, where the diode networks initiate limiting; limiting is complete at ≈±0.9 V. The diode biasing networks control the loop gain to prevent oscillation during the transition from the linear to the saturated mode. The critical resistors are R12, R13, R27, and R28, which may require slight changes if instability occurs at the onset of limiting.

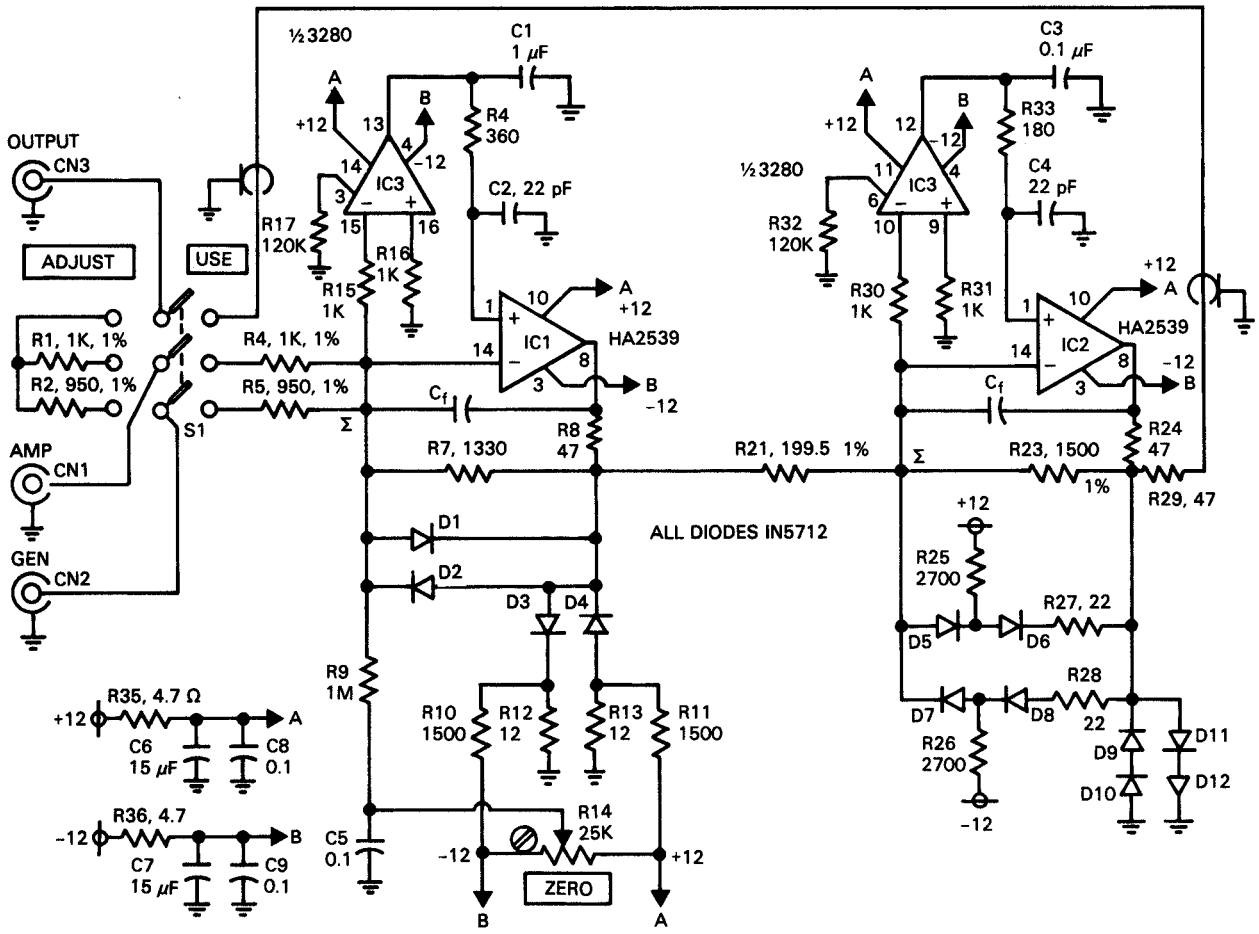

Figure A-8—Nonlinearity Bridge with Amplifier. An Unbalance of 100 mV at the Output Signifies an Integral Nonlinearity of 0.1% in an Amplifier with a 10 V Maximum Output

Because only the top 1% of an amplifier pulse occupies the linear range of the bridge amplifier during a nonlinearity measurement, the signals issuing from it are a fraction of $t_{1/2}$. As the shaping index is reduced, the ballistic deficit due to the finite rise time of the bridge amplifier reduces the accuracy of the measurement. For amplifiers with two or more integrating poles, the apparent L_I due to the ballistic deficit is $\approx 0.5\tau_r/t_{1/2}\%$, where τ_r is the rise time of the bridge amplifier and $t_{1/2}$ is the shaping index of the amplifier being tested, with both quantities measured in ns. In the unit described above, if its τ_r is 20 ns the apparent L_I of a perfectly linear amplifier with $t_{1/2}$ = 1 μs will be 0.01%.

Copyright © 1989 IEEE All Rights Reserved

Copyright The Institute of Electrical and Electronics Engineers, Inc.
Provided by IHS under license with IEEE
No reproduction or networking permitted without license from IHS
Not for Resale

The bridge amplifier over its useful dynamic range need not be particularly linear because its fractional nonlinearity does not *add* to a measurement of nonlinearity, but contributes as a *multiplier*. For example, assume the measured nonlinearity of an amplifier to be 0.1% and the null-amplifier nonlinearity to be 10%; the corrected nonlinearity will be 0.11%. In view of the preceding, it is sufficiently accurate to test the nonlinearity of the null amplifier over its limited dynamic range by plotting V_a vs V_{in} with a pulse generator and oscilloscope. If there is doubt about the oscilloscope's linearity, it can be tested separately against the generator's pulse-height control.

The requirements for the semiconductor devices used in the nonlinearity bridge are given below:

The operational amplifier in the IC1 and IC2 positions is an HA2539 with a gain-bandwidth product of 600 MHz and a maximum bias current of 20 μA.

The op amp in the IC3 position is a CA3280 dual transconductance amplifier with an input offset current ≤0.2 μA at a gain-control bias current of 100 μ A and an input offset voltage ≤3 mV.

All diodes are Schottky-barrier types with ≤1 pF at 0 V, ≤0.6 V at 10 mA, and ≤1 μA at 1 V reverse bias.

A4.2 Pole/Zero Cancellation

The *RC* feedback network of a charge-sensitive preamplifier constitutes a differentiator which, in conjunction with that of the main amplifier, causes a unipolar pulse to undershoot the baseline. This is undesirable because in pulse-height measurements with randomly-occurring pulses, the peak height of a pulse is diminished by the amplitude of an underlying undershoot. This causes peak broadening in a spectrum because pulse overlaps on the undershoots occur randomly. To eliminate the undershoot, it is customary to dc-couple a fraction of the preamplifier output signal into the main amplifier input. This path parallels the ac coupling of the first differentiator and furnishes a compensating signal that offsets the effect of R_fC_f. ("Poles" and "zeroes" are mathematical quantities that appear in the shaping-network response function, hence the term "pole/zero cancellation".)

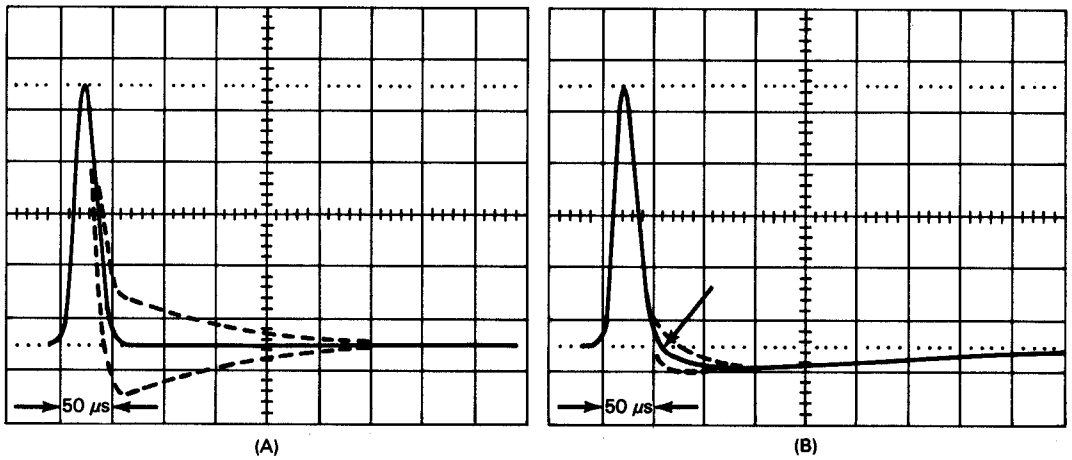

Figure A-9—Effect of Pole/Zero Compensation on Pulse Recovery. In both graphs, the correct adjustment yields the solid curves.

A4.2.1 Effect of Pole/Zero Compensation on Pulse Recovery

In Fig A-9(A), the lower dotted waveform shows the undershoot that occurs when a signal having a decay time constant of 100 μs drives a main amplifier with a $t_{1/2}$ of 24 μs. The 100 μs decay time may be that of a tail-pulse generator coupled to the main amplifier, or of a preamplifier driven either by a detector or by a rectangular-pulse

Copyright © 1989 IEEE All Rights Reserved

Copyright The Institute of Electrical and Electronics Engineers, Inc.
Provided by IHS under license with IEEE
No reproduction or networking permitted without license from IHS
Not for Resale

generator. The solid line, which returns to the baseline monotonically, results from a correctly-adjusted P/Z network. The upper dotted waveform is caused by overcompensation, resulting in a slowly decaying “back porch”.

A4.2.2 Effect of Tail-Pulse Generator on Pole/Zero Compensation

When a preamplifier and main amplifier are combined, a tail-pulse generator should not be the source of the test signal because it adds still another differentiator; the P/Z network can compensate for the effect of the generator or the preamplifier, but not both (except at one point on the tail of the pulse rather than over the full range of recovery). This is shown in Fig A-9(B): an undershoot occurs regardless of how the P/Z network is adjusted. Nevertheless, if a tail-pulse generator is used, there is a range of operation where noise measurements can be made accurately (see A4.2.3) if the P/Z network is adjusted so that the point of maximum curvature on the tail of the pulse intersects the baseline (arrow in Fig A-9 (B)).

A4.2.3 Pole/Zero Compensation and Noise

Depending on the particular circuit configuration of the P/Z compensation network, misadjustment may or may not have an effect on the *absolute* noise level, but because the P/Z control affects the amplitude of the shaped pulse, the signal-to-noise *ratio* will be affected. With a perfectly symmetrical pulse, the fractional error in measured SNR caused by a misadjustment of the P/Z control is one-half of the ratio of peak undershoot to peak pulse height (or one-half the ratio of peak back-porch height to peak pulse height). With a CR - $(RC)^4$ network, the error is ≈40% of that ratio. When a tail-pulse signal is used for testing a preamplifier/main amplifier combination, the least error occurs when the P/Z adjustment is that shown by the solid line in Fig A-9 (B), but there is still an error. For it to be ≤1%, the ratio of $T_g T_f / (T_g + T_f)$ to $t_{1/2}$ should be ≥10, where T_g, T_f, and $t_{1/2}$ are, respectively, the tail-pulse decay constant, the preamplifier decay constant, and the shaped-pulse width. That condition is not met for the waveform in Fig A-9 (B), where T_g is 100 μs, T_f is 50 μs, and $t_{1/2}$ is 24 μs; the error is 16% for parallel noise and 10% for series noise.

A4.5 Elimination of Noise Suppression by the Baseline Restorer

If the BLR is optimized for energy resolution at a short shaping time, but the amplifier is operated at a long one, the BLR will suppress low-level noise from a voltmeter but not from an MCA. In this circumstance, a voltmeter measurement of noise will give a falsely-optimistic indication. To test for this condition, examine the baseline with an oscilloscope as follows:

1) Switch in the BLR.
2) Set the amplifier for high gain and its longest shaping time.
3) Set the oscilloscope sweep for 1 ms/DIV; turn the sensitivity up so that the peak-to-peak noise, if present, has an amplitude of 1-2 DIV. If a bright line or band appears on the baseline, noise signals falling below the BLR threshold are being suppressed and a noise measurement will be inaccurate.
4) Switch out the BLR. The bright band should disappear completely, leaving a normal, random-noise signal having a greater amplitude than with the BLR switched in.
5) If the bright band does not disappear, the BLR's storage capacitor is too small and must be shunted by one large enough to accomplish the disappearance, with “large enough” meaning that a further doubling will not increase the measured noise by more than ≈2%.

Copyright © 1989 IEEE All Rights Reserved

Copyright The Institute of Electrical and Electronics Engineers, Inc.
Provided by IHS under license with IEEE
No reproduction or networking permitted without license from IHS Not for Resale

A4.5.1 Search for External Noise Pickup

With the generator off but connected to the amplifier, and with the oscilloscope sensitivity turned up far enough to observe the noise on the baseline, carefully examine the noise for components which do not arise in the amplifier system but which may be correlated with the power-line frequency and its harmonics, or with digital noise arising from MCAs, microprocessors, computers, and the carrier frequencies of local radio stations. AM broadcast stations can be particularly troublesome because their operating frequencies are close to the bandwidth of the amplifiers dealt with in this standard. The search should be made throughout the range of oscilloscope sweep speeds, with the oscilloscope sweep synchronized and unsynchronized to the power-line frequency. An MCA can help with this search if noise spikes are large enough to register as low-energy peaks.

A4.5.2 Reduction of External Noise Pickup

The external noise should be eliminated before making measurements. It usually helps to closely cluster the various parts of the test setup so that the connecting cables can be kept short, thereby reducing pickup on the cable shield braid. (The braid is less than a perfect conductor and will allow high-amplitude, high-frequency noise to enter the system.) Also, the system and its test instruments should be plugged into a single power block rather than into several which are spaced around the walls of a test area.

A4.8 Measurement of Nonlinearity in Non-inverting Amplifiers

In using a nonlinearity bridge to make measurements on an amplifier, it is necessary that it invert the input signal. If the design does not permit that, an inverting stage must be added somewhere along the signal chain. A commercially-available sum-and-invert amplifier is suitable for this purpose, but the question of its nonlinearity arises. If placed where the signal level is low, that is, at the input of the amplifier under test, the nonlinearity measurement may not be necessary. If placed where measure the level is high, it will be necessary. A flat-topped pulse generator should be used for such a test. The setup should be the one used for measuring nonlinearity of a main amplifier (see 4.8).

Because there is no shaping filter in such an amplifier, the null signal will be a horizontal line on the CRT rather than a peak. The point on the time axis chosen for the null criterion should correspond to the point where the peak occurs in the shaping amplifier to be tested. To obtain the null condition, the gain must be adjusted precisely to unity. Since sum-and-invert amplifiers ordinarily do not contain gain controls, it will be necessary to add one temporarily. For reducing the gain, a 10-turn potentiometer can be interposed between the generator and the inverting amplifier. To increase the gain, the potentiometer can be used to inject a fraction of the generator signal into the second input of the sum-and-invert amplifier (the input that would ordinarily be unused in this measurement).

A4.9 Measurement of Source Resistance

It is assumed that the equivalent circuit of an output stage consists of an ideal amplifier coupled to the outside world through a source resistance r_o (Fig 8(A)). If the output is loaded with a current 1, it causes a voltage drop V_{ro} across r_o. It follows that:

$$r_o = \frac{v_{ro}}{I} \qquad \text{(A-4)}$$

where

the terms have the meanings given above, and the units are ohms, volts, and amperes.

Copyright © 1989 IEEE All Rights Reserved

Copyright The Institute of Electrical and Electronics Engineers, Inc.
Provided by IHS under license with IEEE
No reproduction or networking permitted without license from IHS Not for Resale

Note that in Fig 8(A), if V_a is the output voltage, loading it will cause a drop of $\Delta V_a = V_{ro}$. A convenient means of loading is with a resistor R_o, which causes a current flow of $I = V_a/R_o$. It follows that:

$$r_o = \frac{v_{ro} R_o}{V_a} = \frac{\Delta V_a R_o}{V_a} \quad \text{(A-5)}$$

(By rearranging Eq A-5, it can be seen that $r_o/R_o = \Delta V_a/V_a$, which is valid as long as $\Delta V_a << V_a$.)

Because ΔV_a ordinarily is a small fraction of V_a, it will be necessary to buck the output of the amplifier against the output of the generator (using a bridge circuit) to measure the change that occurs under loading. The procedure is to first balance the bridge with no load on the amplifier, then to load it with R_o. The bridge will become unbalanced and produce a signal ΔV_{br}. If the bridge contains an amplifier with a gain A_{br}, ΔV_{br} must be divided by A_{br} to determine $\Delta V = \Delta V_a$, and Eq A-5 becomes:

$$r_o = \frac{(\Delta V_{br} R_o)}{(A_{br} V_m)} \quad \text{(A-6)}$$

The output V_a should be the rated output V_m because even if not stated in the specifications, it usually is assumed that an amplifier will accept a load of 50 Ω. It should be noted that if $V_m = 10$ V and $R^o = 50$ Ω, the current will be 0.2A. If this overloads the output stage, ro is likely to be much greater at 10 V than it is at a lower voltage.

In Fig 8(B), *ro* does not connect directly with the output terminal, but through two back-terminating resistors, each of value R_o. In this case, V_{ro} does not equal ΔV_a at the loaded output terminal, but nearly so at the one to which the bridge must be connected. (With a back-terminating resistor of 50 Ω and a 1000 Ω bridge load, the error is 5%). Note that if the loaded output is simply shorted to ground, the current is the same as before, that is, $I = V_a/R_o$, but if the external load is R_o, the current is halved, that is, $I = V_a/2R_o$.

A4.11 Test Fixture for Changing the Supply Voltage

With modular systems, a convenient test fixture to connect between the module and the power bin consists of a box containing as many silicon rectifiers as there are power buses, each rectifier shunted by a SPST toggle switch, and each network connected in series with one of the buses. When switched in, each of the diodes will cause a bus voltage drop of between 0.5 V and 1 V, which can be measured with a DVM while the change in offset and V_m are measured at the amplifier output.

A4.12 Crossover-Walk Calibration

Instruments used in walk measurements are a step attenuator and a crossover pickoff detector. Walk in the attenuator vs its switch settings can be measured with an accuracy of ±0.1 ns if the oscilloscope has a sweep speed of 1 ns/DIV.

A4.12.1 Crossover Walk, Attenuator

A test setup is shown in Fig A-10. The generator must produce 10 V, 1 μs pulses with a rise time under 30 ns into a shorted delay line. The differentiating action of the line produces a bipolar pulse. Impedance matching is not important because reflections following the first crossover do not affect the measurement. The line consists of ≈25 m of 50-93 Ω cable that must be isolated from the attenuator by a unity-gain buffer stage with a t_r of 10 ns or less and capable of supplying ±10 V to the attenuator. (A type LH0033 IC is suitable.) Connections to the generator should be via BNC fittings without intervening cables. The detector can be a nonlinearity bridge with one input left open or it can be a crossover-pickoff discriminator. Cabling between the attenuator, crossover detector, and oscilloscope should be under 50 cm, and the same cables must be used in the final tests of the amplifier. If the sensitivity desired is ±1 ns, the

 Copyright © 1989 IEEE All Rights Reserved

Copyright The Institute of Electrical and Electronics Engineers, Inc.
Provided by IHS under license with IEEE
No reproduction or networking permitted without license from IHS Not for Resale

oscilloscope must have a sweep speed of 1 ns/DIV with delayed-sweep capability. If the detector is the nonlinearity bridge described in A3.8, it must be attached directly to the input connector of the oscilloscope.

In the first test, connect the oscilloscope to the attenuator to measure its walk, then:

1) Adjust the generator pulse width to produce a 10 V bipolar pulse at the input of the buffer. The slope should be as high as possible in the region of the crossover.
2) Set the baseline precisely on a graticule line as shown in the lower waveform of Fig 5 (main text), and carefully adjust zero settings so that the baseline does not move when switching the attenuator or oscilloscope sensitivity.

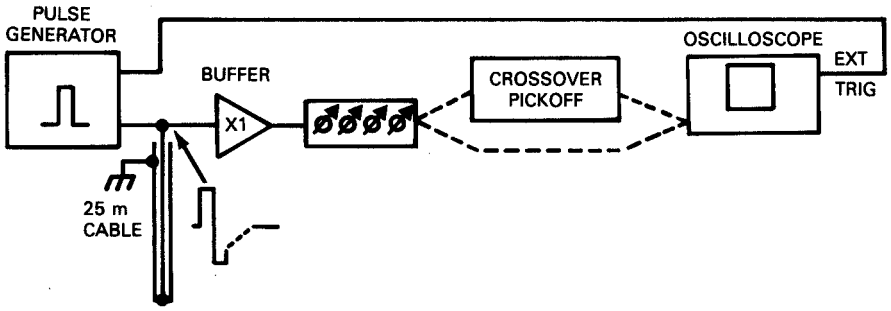

Figure A-10—Test Setup for Measuring Attenuator Walk.

3) Begin with a sensitivity of 0.5 V/DIV, the delayed sweep, and an expanded time scale.
4) Switch in attenuator settings beginning with $\times\sqrt{2}$ and record the walk, with and without output termination.

Shifts toward the right are time lags. As the attenuation increases, the slope of the trace decreases and accurate zeroing of the baseline becomes increasingly important. Also, as the attenuation increases, it is necessary to increase the oscilloscope sensitivity to maintain usable slope, but oscilloscope saturation must never be allowed to cause walk. At each increase, the preceding step must be used as a timing reference for the current one. This is a time-consuming part of the test, and an optimum switching routine should be worked out. The generator settings must not be changed during the test.

In a carefully constructed 50 Ω attenuator with metal-film resistors, walk should not exceed 1 ns.

A4.12.2 Crossover Walk, Crossover-Pickoff Module

The module should be checked for walk by connecting it between the attenuator and the oscilloscope. The attenuator must be operated without a termination in order to apply a maximum of 10 V to the module. The test is the same as for the attenuator, but corrections must be made for attenuator walk. Also, the fast rise from the generator may cause slewing; it may be necessary to slow the generator's rise time to check for this.

A4.12.3 Crossover Walk, Nonlinearity Bridge

The speed and limiting action of the nonlinearity bridge make it usable for measuring crossover walk.

Connect the bridge between the attenuator and the oscilloscope, leaving one input terminal open, and repeat the walk test with the oscilloscope sensitivity at 0.1 V/DIV. It will be observed that the oscilloscope sensitivity need not be increased as attenuator steps are switched in, and it will also be observed that the walk is greater and not as consistent with the limiter as it was without it. Nevertheless, the walk should be under ±2 ns for the combination of attenuator and limiter. Note that all attenuator steps must be out and the termination disconnected to obtain a 10 V signal into the limiter.

Copyright © 1989 IEEE All Rights Reserved

--`,,`-`-`,,`,,`,`,,`---
Copyright The Institute of Electrical and Electronics Engineers, Inc.
Provided by IHS under license with IEEE
No reproduction or networking permitted without license from IHS
Not for Resale

A5.4 Noise-Measurement Formulas

The formula for determining equivalent input noise is based on the principle that the SNR in a linear system is the same at the input as at the output (see 4.5). The noise can be expressed in different units by invoking appropriate multipliers in the following equations.

The equivalent input noise charge $q_{ni\ rms\ vm}$ as determined with a true rms voltmeter is:

$$q_{ni\ rms\ vm} = \frac{V_{in}C_c}{V_a}e_{no}\ \text{C rms} \qquad \text{(A-7)}$$

where

units are in farads and volts.

Example: $V_{in} = 0.01$ V

$C_c = 1$ pF

$V_a = 5.00$ V

$e_{no} = 1.00$ mV.

$$q_{ni\ rms\ vm} = \frac{(0.01\ \text{V}) \times (1 \times 10^{-12}\ \text{F})}{5.00\ \text{V}}(0.001\ \text{V})$$

$= 2.00 \times 10^{-18}$ C rms

The preceding example illustrates Eq 3 in 5.4.3.

If an average-responding voltmeter is used, Eq A-7 must be multiplied by 1.128; from the preceding example,

qni rms vm becomes:

qni ave vm $= 2.26 \times 10^{-18}$ C,

illustrating Eq 4 in 5.4.3.

To convert charge to ion pairs, multiply by the factor

$1/q = 6.24 \times 10^{18}$ electrons per C. Eq A-7 becomes:

$$N_{ni\ rms\ vm} = 6.24 \times 10^{18}\frac{V_{in}C_c}{V_a}e_{no}\ \text{equiv elect rms} \qquad \text{(A-8)}$$

If an average-responding voltmeter is used, Eq A-8 must be multiplied by 1.128 to give:

Copyright © 1989 IEEE All Rights Reserved

Copyright The Institute of Electrical and Electronics Engineers, Inc.
Provided by IHS under license with IEEE
No reproduction or networking permitted without license from IHS Not for Resale

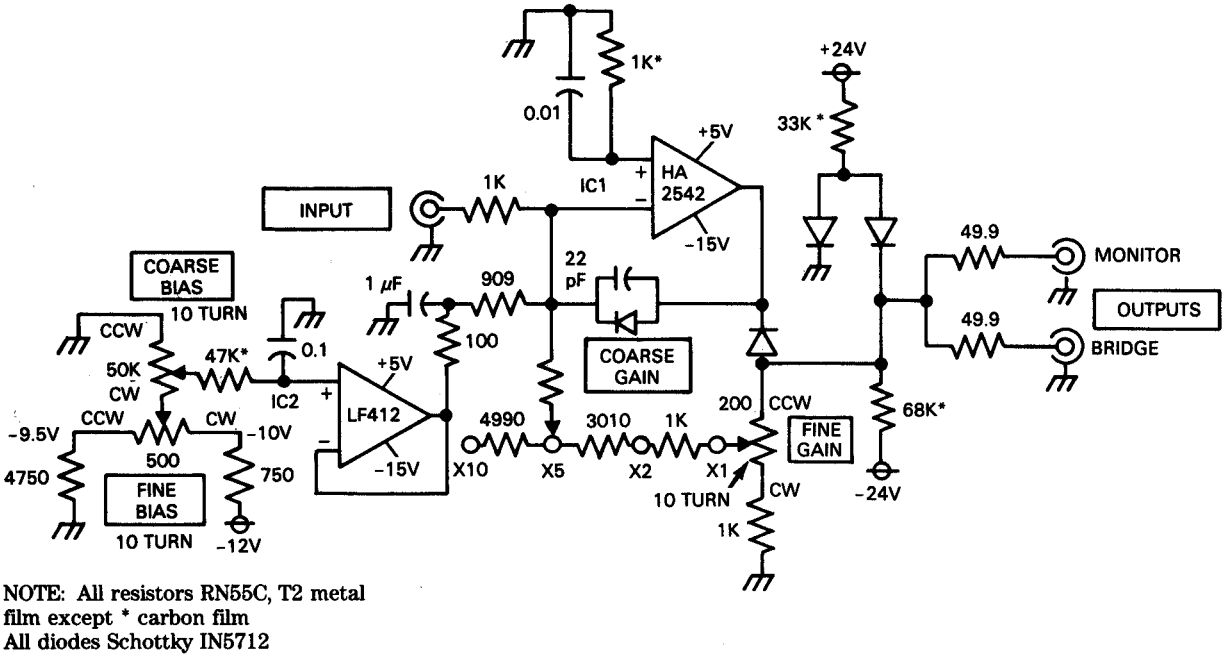

NOTE: All resistors RN55C, T2 metal film except * carbon film
All diodes Schottky IN5712

Figure A-11—Reference Biased Amplifier for Nonlinearity Measurement

$$N_{ni\ ave\ vm} = 7.04 \times 10^{18} \frac{V_{in} C_c}{V_a} e_{no} \text{ equiv elect rms} \quad \text{(A-9)}$$

If the multipliers of Eqs A-8 and A-9 are applied to the earlier example, the results are $N_{\text{ne rms vm}} = 12.5$ and $N_{\text{ne aver vm}} = 14.1$ equivalent electrons rms per mV, corresponding to Eqs 6 and 5, respectively, in 5.4.

A5.4.1 Noise Formulas, Preamplifiers for Germanium Detectors

To obtain the noise in keV FWHM (Ge) when measurements are made with an average-responding voltmeter, the following formula must be used:

$$\text{FWHM} = 1.128 \frac{2.355\ \varepsilon \times V_{in} C_c}{q V_a} e_{no} \text{ eV} \quad \text{(A-10)}$$

where

1.128 = conversion factor, average to rms
2.355 = conversion factor, rms to FWHM
q = 1.602 × 10-19 C per electron
ε = 2.97 for Ge, 3.63 for Si

FWHM is in units of eV, and the remaining terms are in units of V and F. Combining terms:

$$\text{FWHM} = 4.295 \times 10^{19} \frac{\varepsilon V_{in} C_c}{Va} e_{no} \text{ eV} \quad \text{(A-11)}$$

for an average-responding ac voltmeter.

Copyright © 1989 IEEE All Rights Reserved

Copyright The Institute of Electrical and Electronics Engineers, Inc.
Provided by IHS under license with IEEE
No reproduction or networking permitted without license from IHS
Not for Resale

In the special case of a germanium detector when an average-responding voltmeter is used,

$$\begin{aligned} \varepsilon &= 2.97 \text{ eV per hole-electron pair} \\ V_{in}C_c &= 0.985 \times 10^{-14} \text{ C (9.85 mV and 1.00 pF)} \\ V_a &= 5.00 \text{ V} \end{aligned} \qquad \text{(A-12)}$$

resulting in FWHM = 100 eV per MV of e_{no}.

A5.4.2 Noise Formula for Silicon Detectors

For the special case of a silicon detector when an average-responding voltmeter is used,

$$\begin{aligned} \varepsilon &= 3.63 \text{ eV per hole-electron pair} \\ V_{in}C_c &= 10^{-14} \text{ C (10.0 mV and 1.00 pF)} \\ V_a &= 6.00 \text{ V} \end{aligned} \qquad \text{(A-13)}$$

resulting in FWHM = 100 eV/mV of e_{no}.

A6.1 Reference Biased Amplifier, Nonlinearity Measurement

The circuit is shown in Fig A-11. Semiconductors are listed below. The adjustable dc bias is applied to the summing junction of IC1 through the buffer stage IC2. Coarse gain is adjusted by switching resistors in the feedback network, and fine gain by a 10-turn control. The diode network keeps the output from going positive in the absence of an input signal. The circuit inverts input signals.

The operational amplifier IC1 should have a slew rate of not less than 100V/μs, be stable with a closed-loop gain of 2.5 and have a linear output capability of-10 V at 20 mA. The HA-2542 is ideal for this purpose. Other op amps may require an output buffer to supply the 20 mA load, making the circuit subject to feedback stability problems.

The buffer stage, IC2, should have an FET input stage; any slow, unity-gain-stable op amp, such as the TL-082 or LF-412, will do.

Copyright © 1989 IEEE All Rights Reserved

Copyright The Institute of Electrical and Electronics Engineers, Inc.
Provided by IHS under license with IEEE
No reproduction or networking permitted without license from IHS Not for Resale