IEEE Std 1580-2001

IEEE Standards

1580™

IEEE Recommended Practice for Marine Cable for Use on Shipboard and Fixed or Floating Platforms

IEEE Industry Applications Society

Sponsored by the
International Marine Industry Committee



Published by
The Institute of Electrical and Electronics Engineers, Inc.
3 Park Avenue, New York, NY 10016-5997, USA

17 December 2001

Print: SH94944
PDF: SS94944

Copyright The Institute of Electrical and Electronics Engineers, Inc.
Provided by IHS under license with IEEE
No reproduction or networking permitted without license from IHS

Not for Resale

IEEE Recommended Practice for Marine Cable for Use on Shipboard and Fixed or Floating Platforms

Sponsor

Petroleum and Chemical Industry Committee
of the
IEEE Industrial Applications Society

Approved 14 June 2001

IEEE-SA Standards Board

Abstract: Requirements are given for single or multiconductor cables, with or without metal armor and/or jacket, and rated 300 V to 35 kV, intended to be installed aboard marine vessels, fixed and floating offshore facilities, and in accordance with industry installation standards and the regulations of the authorities having jurisdiction (AHJ).
Keywords: marine cable, platforms, shipboard

The Institute of Electrical and Electronics Engineers, Inc.
3 Park Avenue, New York, NY 10016-5997, USA

Copyright © 2001 by the Institute of Electrical and Electronics Engineers, Inc.
All rights reserved. Published 20 December 2001. Printed in the United States of America.

Print: ISBN 0-7381-2934-8 SH94944
PDF: ISBN 0-7381-2935-6 SS94944

No part of this publication may be reproduced in any form, in an electronic retrieval system or otherwise, without the prior written permission of the publisher.

Copyright The Institute of Electrical and Electronics Engineers, Inc.
Provided by IHS under license with IEEE
No reproduction or networking permitted without license from IHS Not for Resale

IEEE Standards documents are developed within the IEEE Societies and the Standards Coordinating Committees of the IEEE Standards Association (IEEE-SA) Standards Board. The IEEE develops its standards through a consensus development process, approved by the American National Standards Institute, which brings together volunteers representing varied viewpoints and interests to achieve the final product. Volunteers are not necessarily members of the Institute and serve without compensation. While the IEEE administers the process and establishes rules to promote fairness in the consensus development process, the IEEE does not independently evaluate, test, or verify the accuracy of any of the information contained in its standards.

Use of an IEEE Standard is wholly voluntary. The IEEE disclaims liability for any personal injury, property or other damage, of any nature whatsoever, whether special, indirect, consequential, or compensatory, directly or indirectly resulting from the publication, use of, or reliance upon this, or any other IEEE Standard document.

The IEEE does not warrant or represent the accuracy or content of the material contained herein, and expressly disclaims any express or implied warranty, including any implied warranty of merchantability or fitness for a specific purpose, or that the use of the material contained herein is free from patent infringement. IEEE Standards documents are supplied "**AS IS**."

The existence of an IEEE Standard does not imply that there are no other ways to produce, test, measure, purchase, market, or provide other goods and services related to the scope of the IEEE Standard. Furthermore, the viewpoint expressed at the time a standard is approved and issued is subject to change brought about through developments in the state of the art and comments received from users of the standard. Every IEEE Standard is subjected to review at least every five years for revision or reaffirmation. When a document is more than five years old and has not been reaffirmed, it is reasonable to conclude that its contents, although still of some value, do not wholly reflect the present state of the art. Users are cautioned to check to determine that they have the latest edition of any IEEE Standard.

In publishing and making this document available, the IEEE is not suggesting or rendering professional or other services for, or on behalf of, any person or entity. Nor is the IEEE undertaking to perform any duty owed by any other person or entity to another. Any person utilizing this, and any other IEEE Standards document, should rely upon the advice of a competent professional in determining the exercise of reasonable care in any given circumstances.

Interpretations: Occasionally questions may arise regarding the meaning of portions of standards as they relate to specific applications. When the need for interpretations is brought to the attention of IEEE, the Institute will initiate action to prepare appropriate responses. Since IEEE Standards represent a consensus of concerned interests, it is important to ensure that any interpretation has also received the concurrence of a balance of interests. For this reason, IEEE and the members of its societies and Standards Coordinating Committees are not able to provide an instant response to interpretation requests except in those cases where the matter has previously received formal consideration.

Comments for revision of IEEE Standards are welcome from any interested party, regardless of membership affiliation with IEEE. Suggestions for changes in documents should be in the form of a proposed change of text, together with appropriate supporting comments. Comments on standards and requests for interpretations should be addressed to:

Secretary, IEEE-SA Standards Board
445 Hoes Lane
P.O. Box 1331
Piscataway, NJ 08855-1331
USA

Note: Attention is called to the possibility that implementation of this standard may require use of subject matter covered by patent rights. By publication of this standard, no position is taken with respect to the existence or validity of any patent rights in connection therewith. The IEEE shall not be responsible for identifying patents for which a license may be required by an IEEE standard or for conducting inquiries into the legal validity or scope of those patents that are brought to its attention.

The IEEE and its designees are the sole entities that may authorize the use of the IEEE-owned certification marks and/or trademarks to indicate compliance with the materials set forth herein.

Authorization to photocopy portions of any individual standard for internal or personal use is granted by the Institute of Electrical and Electronics Engineers, Inc., provided that the appropriate fee is paid to Copyright Clearance Center. To arrange for payment of licensing fee, please contact Copyright Clearance Center, Customer Service, 222 Rosewood Drive, Danvers, MA 01923 USA; +1 978 750 8400. Permission to photocopy portions of any individual standard for educational classroom use can also be obtained through the Copyright Clearance Center.

Copyright The Institute of Electrical and Electronics Engineers, Inc.
Provided by IHS under license with IEEE
No reproduction or networking permitted without license from IHS
Not for Resale

Introduction

(This introduction is not part of IEEE Std 1580-2001, IEEE Recommended Practice for Marine Cable for Use on Shipboard and Fixed or Floating Platforms.)

The following were members of the Electrical Installations on Marine Cable for Use on Shipboard and Fixed or Floating Marine Platforms Working Group:

Frank H. Rocchio, *Chair*
Rudy Bright, *Vice Chair*

Edward Aberbach
Chuck Barlow
Richard J. Collins
Walter Constantine
Ronald Essigmann
Marcelo Hirschler
Philip Laudicina
Dieter Popoff
Nancy Robinson
Siegfried Schauffele
H. R. Stewart

Contributors and invited experts:

Steve Boggs
James M. Daly
George Dobrowolski
Brian S. Ensign
Thomas Feil
Thomas Guida
Bal Kher
Gerard Maz
L. Bruce McClung
Art Pack
David Quinn
Dan Rodriguez
John Rosata
Gary Savage
Bill Wilkens

The following members of the balloting group voted on this standard. Balloters may have voted for approval, disapproval, or abstention:

Edward Aberbach
Chuck Barlow
David N. Bishop
Frederick Bried
Rudy Bright
David B. Burns
Richard J. Collins
Walter Constantine
Harry Conte
James M. Daly
Donald Davis
Guru Dutt Dhingra
Gary Donner
Donald G. Dunn
Marcus O. Durham
Brian S. Ensign
C. James Erickson
Ronald Essigmann
Marcelo Hirschler
Paul House
Richard H. Hulett
Ben C. Johnson
Philip Laudicina
Wayne Madden
George Mahl
Michael Mayfield
Lorraine K. Padden
Dieter Popoff
John E. Propst
Frank H. Rocchio
James A. Ruggieri
Chet Sandberg
Scott W. Shannon
H. R. Stewart
Donald A. Voltz

Copyright © 2001 IEEE. All rights reserved.

Copyright The Institute of Electrical and Electronics Engineers, Inc.
Provided by IHS under license with IEEE
No reproduction or networking permitted without license from IHS
Not for Resale

When the IEEE-SA Standards Board approved this standard on 14 June 2001, it had the following membership:

Donald N. Heirman, *Chair*
James T. Carlo, *Vice Chair*
Judith Gorman, *Secretary*

Satish K. Aggarwal
Mark D. Bowman
Gary R. Engmann
Harold E. Epstein
H. Landis Floyd
Jay Forster*
Howard M. Frazier
Ruben D. Garzon
James H. Gurney
Richard J. Holleman
Lowell G. Johnson
Robert J. Kennelly
Joseph L. Koepfinger*
Peter H. Lips
L. Bruce McClung
Daleep C. Mohla
James W. Moore
Robert F. Munzner
Ronald C. Petersen
Gerald H. Peterson
John B. Posey
Gary S. Robinson
Akio Tojo
Donald W. Zipse

*Member Emeritus

Also included is the following nonvoting IEEE-SA Standards Board liaison:

Alan Cookson, *NIST Representative*
Donald R. Volzka, *TAB Representative*

Noelle D. Humenick
IEEE Standards Project Editor

Copyright © 2001 IEEE. All rights reserved.

Copyright The Institute of Electrical and Electronics Engineers, Inc.
Provided by IHS under license with IEEE
No reproduction or networking permitted without license from IHS
Not for Resale

Contents

1. Overview 1

1.1 Scope 1
1.2 Vessel classification 1
1.3 Cable construction, testing, and certification 1

2. References 2

3. Definitions, abbreviations, and acronyms 4

3.1 Definitions 4
3.2 Abbreviations and acronyms 6

4. Government codes, rules, and regulations 6

4.1 Code of federal regulations 6

5. Cable construction 7

5.1 Conductors 7
5.2 Conductor shielding 7
5.3 Insulation 8
5.4 Insulation shield (5–35 kV shielded cable) 8
5.5 Tapes 9
5.6 Glass braid 9
5.7 Conductor identification 9
5.8 Cabling 9
5.9 Fillers 9
5.10 Composite cables with optical fibers 10
5.11 Shielding 10
5.12 Cable jackets 10
5.13 Marker 10
5.14 Armor 11
5.15 Overall sheath 12
5.16 Dimension and weight tolerances 12
5.17 Tests on finished cable 13
5.18 Basic construction details for various cable types 22
5.19 Cable designations 24

6. Cable application and installation 42

Annex A (informative) Repeated flexing test equipment 43

Annex B (informative) Typical cable dimensions and weights 44

Annex C (informative) Conversion tables 67

English treatment of subclause 5.17.4 69

Copyright © 2001 IEEE. All rights reserved.

Copyright The Institute of Electrical and Electronics Engineers, Inc.
Provided by IHS under license with IEEE
No reproduction or networking permitted without license from IHS
Not for Resale

Copyright © 2001 IEEE. All rights reserved.

Copyright The Institute of Electrical and Electronics Engineers, Inc.
Provided by IHS under license with IEEE
No reproduction or networking permitted without license from IHS

Not for Resale

IEEE Recommended Practice for Marine Cable for Use on Shipboard and Fixed or Floating Platforms

1. Overview

1.1 Scope

This recommended practice contains the requirements for single or multiconductor cables, with or without metal armor and/or jacket, and rated 300 V to 35 kV, intended to be installed aboard marine vessels, fixed and floating offshore facilities, and in accordance with industry installation standards and the regulations of the authorities having jurisdiction (AHJ).

The recommendations define what is considered good engineering practice with reference to the reliability and durability of the cable.

1.2 Vessel classification

Marine vessels and platforms are grouped as follows:

— *Group 1:* Ocean-going vessels that navigate on any ocean, gulf, bay, sound, lake, or river.
— *Group 2:* Fixed and floating offshore petroleum facilities on any ocean, gulf, bay, sound, lake, or river.

Applicability

These recommendations have been prepared for application to all vessels in groups 1 and 2. Recreational vessels are governed by other standards.

1.3 Cable construction, testing, and certification

Electrical cable should be constructed and tested in accordance with this recommended practice. The cable should be listed or classified by a nationally recognized testing laboratory (NRTL) in accordance with this recommended practice.

Copyright © 2001 IEEE. All rights reserved.

Copyright The Institute of Electrical and Electronics Engineers, Inc.
Provided by IHS under license with IEEE
No reproduction or networking permitted without license from IHS
Not for Resale

2. References

This recommended practice should be used in conjunction with the following publications. Various organizations have developed numerous codes, guides, and standards that have substantial acceptance by industry and governmental bodies. Codes, guides, and standards useful in the design and installation of electrical cable systems are listed below as references only. These documents are not considered a part of this recommended practice except for those specific clauses of documents referenced elsewhere in this recommended practice. Those publications listed with dates are specific to this publication and other versions should not be utilized.

API RP 2A-WSD, 1993, Recommended Practice for Planning, Designing and Constructing Fixed Offshore Platforms—Working Stress Design.[1]

API RP 14F, 1999, Recommended Practice for Design and Installation of Electrical Systems for Fixed and Floating Offshore Petroleum Facilities for Unclassified and Class 1, Division 1 and Division 2 Locations.

API RP 14FZ, Recommended Practice for Design and Installation of Electrical Systems for Fixed and Floating Offshore Petroleum Facilities for Unclassified and Class 1, Zone 0, Zone 1 and Zone 2 Locations.

ASTM B3, Standard Specification for Soft or Annealed Copper Wire.[2]

ASTM B8, Standard Specification for Concentric-Lay-Stranded Copper Conductors, Hard, Medium-Hard, or Soft.

ASTM B33, Standard Specification for Tinned Soft or Annealed Copper Wire for Electrical Purposes.

ASTM B117, Standard Practice for Operating Salt Spray (Fog) Apparatus.

ASTM B172, Standard Specification for Rope-Lay-Stranded Copper Conductors Having Bunch-Stranded Members, for Electrical Conductors.

ASTM B173, Standard Specification for Rope-Lay-Stranded Copper Conductors Having Concentric-Stranded Members, for Electrical Conductors.

ASTM B174, Standard Specification for Bunch-Stranded Copper Conductors for Electrical Conductors.

ASTM B189, Standard Specification for Lead-Coated and Lead-Alloy-Coated Soft Copper Wire for Electrical Purposes.

ASTM B496, Standard Specification for Compact Round Concentric Lay Stranded Copper Conductor.

ASTM D470, Standard Methods of Testing Crosslinked Insulations and Jackets for Wire and Cable.

ASTM D2671, Standard Test Methods for Heat-Shrinkable Tubing for Electrical Use.

ASTM D4066 Type VIII, Standard Classification System for Nylon Injection and Extrusion Materials (PA).

ASTM F1166, Standard Practice for Human Engineering Design for Marine Systems, Equipment and Facilities.

---

[1]API publications are available from the Publications Section, American Petroleum Institute, 1200 L Street NW, Washington, DC 20005, USA (http://www.api.org/).

[2]ASTM publications are available from the American Society for Testing and Materials, 100 Barr Harbor Drive, West Conshohocken, PA 19428-2959, USA (http://www.astm.org/).

Copyright © 2001 IEEE. All rights reserved.

Copyright The Institute of Electrical and Electronics Engineers, Inc.
Provided by IHS under license with IEEE
No reproduction or networking permitted without license from IHS
Not for Resale

ASTM G23, Standard Practice for Operating Light-Exposure Apparatus (Carbon-Arc Type) With and Without Water for Exposure of Nonmetallic Materials.

CSA C22.2 No. 0.3, Test Methods for Electrical Wires and Cables.[3]

CSA C22.2 No. 38, Thermoset Insulated Wires and Cables.

ICEA T-28-562, Test Method for Measurement of Hot Creep of Polymeric Insulations.[4]

IEC 60068-2-6, 1995, Environmental testing.[5]

IEC 60228, Conductors of insulated cables.

IEC 60331-11, Tests for electric cables under fire conditions—Circuit Integrity.

IEC 60331-21, Cables of rated voltage up to and including 0.6/1.0 kV.

IEC 60331-23, Electric data cable.

IEC 60331-25, Optical fibre cable.

IEEE Std 4, IEEE Standard Techniques for High-Voltage Testing.[6]

IEEE Std 45, IEEE Recommended Practice for Electric Installations on Shipboard.

IEEE Std 1202, IEEE Standard for Flame Testing of Cables for Use in Cable Tray in Industrial and Commercial Occupancies.

MIL-DTL-24643B, General Specification for Cables and Cords, Electric, Low Smoke, for Shipboard Use.[7]

MIL-STD-167-1 (ships), Mechanical Vibrations of Shipboard Equipment.

NEMA WC 54, Guide for Frequency of Sampling Extruded Dielectric Power, Control, Instrumentation, and Portable Cables for Test (ICEA T-26-465).[8]

NEMA WC 57, Standard for Control Cables (ICEA S-73-532).

NEMA WC 70, Standard for Nonshielded Power Cables Rated 2000 V or Less for the Distribution of Electrical Energy (ICEA S-95-658).

NEMA WC 74, 5-46 kV Shielded Power Cable For Use in the Transmission and Distribution of Electrical Energy (ICEA S-93-639).

---

[3]CSA publications are available from the Canadian Standards Association (Standards Sales), 178 Rexdale Blvd., Etobicoke, Ontario, Canada M9W 1R3 (http://www.csa.ca/).

[4]ICEA publications are available from ICEA, P.O. Box 20048, Minneapolis, MN 55420, USA (http://www.icea.org/).

[5]IEC publications are available from the Sales Department of the International Electrotechnical Commission, Case Postale 131, 3, rue de Varembé, CH-1211, Genève 20, Switzerland/Suisse (http://www.iec.ch/). IEC publications are also available in the United States from the Sales Department, American National Standards Institute, 11 West 42nd Street, 13th Floor, New York, NY 10036, USA.

[6]IEEE publications are available from the Institute of Electrical and Electronics Engineers, 445 Hoes Lane, P.O. Box 1331, Piscataway, NJ 08855-1331, USA (http://standards.ieee.org/).

[7]MIL publications are available from Customer Service, Defense Printing Service, 700 Robbins Ave., Bldg. 4D, Philadelphia, PA 19111-5094, USA.

[8]NEMA publications are available from Global Engineering Documents, 15 Inverness Way East, Englewood, CO 80112, USA (http://global.ihs.com/).

Copyright © 2001 IEEE. All rights reserved.

Copyright The Institute of Electrical and Electronics Engineers, Inc.
Provided by IHS under license with IEEE
No reproduction or networking permitted without license from IHS
Not for Resale

NFPA 70-1999, National Electrical Code.[9]

UL 62, Flexible Cord and Fixture Wire.[10]

UL 44, Thermoset Insulated Wires and Cables.

UL 83, Thermoplastic-Insulated Wires and Cables.

UL 1072, Medium-Voltage Power Cables.

UL 1569, Metal-Clad Cables.

UL 1581, Reference Standard for Electrical Wires, Cables, and Flexible Cords.

UL 1685, Standard Vertical-Tray Fire-Propagation and Smoke-Release Test for Electrical and Optical-Fiber Cables.

3. Definitions, abbreviations, and acronyms

3.1 Definitions

3.1.1 alternating current (ac): A periodic current with an average value over a period of time of zero. (The term refers to a current that reverses at regularly recurring intervals of time and that has alternately positive and negative values.)

3.1.2 ampacity: The current that a device can carry within specified temperature limitations in a specified environment.

3.1.3 approved: Acceptable to the authority enforcing the rules. Electrical devices, which carry NRTL approval, are normally acceptable.

3.1.4 bending radius: The minimum radius at which a cable can be bent normally 8 times the diameter for armored cable and 6 times the diameter for unarmored.

3.1.5 capacitance (capacity): That property of a system of conductors and dielectrics that permits the storage of electricity when potential differences exist between the conductors. Its value is expressed as the ratio of a quantity of electricity to a potential difference. A capacitance value is always positive.

3.1.6 continuous duty: A requirement of service that demands operation at a constant load for an indefinite period of time.

3.1.7 copper-free or low copper content aluminum: Aluminum alloys containing 0.4% or less copper.

3.1.8 current: The rate of transfer of electricity.

3.1.9 CWCMC: *See:* **MC cable.**

[9]NFPA publications are available from Publications Sales, National Fire Protection Association, 1 Batterymarch Park, P.O. Box 9101, Quincy, MA 02269-9101, USA (http://www.nfpa.org/).

[10]UL standards are available from Global Engineering Documents, 15 Inverness Way East, Englewood, CO 80112, USA (http://global.ihs.com/).

Copyright © 2001 IEEE. All rights reserved.

Copyright The Institute of Electrical and Electronics Engineers, Inc.
Provided by IHS under license with IEEE
No reproduction or networking permitted without license from IHS Not for Resale

3.1.10 cycle: The complete series of values of a periodic quantity that occurs during a period. (It is one complete set of positive and negative values of an alternating current.)

3.1.11 derating: Lowering of the cable ampacity.

3.1.12 direct current (dc): A unidirectional current in which the changes in polarity are zero or so small that they may be neglected. (As ordinarily used, the term designates a nonpulsating current.)

3.1.13 discharge resistant cable: Cable that has been deemed to be highly resistant to corona discharge in accordance with the requirements of NEMA WC 74, subclauses 3.3.2 and 9.16, for discharge resistant cables.

3.1.14 festooned cable: Flexible cable that is installed in hanging loops to facilitate movement as on a trolley system used to move cargo or equipment as part of a crane or hoisting device.

3.1.15 frequency: The number of periods occurring in unit time of a periodic quantity, in which time is the independent variable.

3.1.16 hertz (Hz): The unit of frequency, one cycle per second.

3.1.17 incidental motion: Repeated flexing as listed in Title 46 CFR Subchapter J, clause 111.60-23, and defined in MC cable with the test in 5.17.14 of this recommended practice.

3.1.18 jacketed cable: Cable with a nonmetallic protective covering.

3.1.19 marine cable: *See:* **shipboard cable, marine.**

3.1.20 metal-clad (MC) cable: Continuously corrugated metal-clad cable as defined by Article 334 of the NEC and UL 1569.

The following definitions apply to the use of continuously corrugated metal (CWCMC) armored cables:

3.1.20.1 flexing, repeated. Items that exceed the average wave motion of one wave every 13 s (4.6 waves per minute) as defined in API RP 2A-WSD for platforms, or for ships the average revolutions of a ship propeller times the number of blades on the propeller.

NOTE—The repeated flexing test in 5.17.14 of IEEE Std 1580-2001 reflects the actual type of incidental motion that the cable would be subjected to when installed aboard ship with the cable securely fastened at intervals not exceeding 2 m or installed in a raceway.

3.1.20.2 movement, excessive. Any motion at less than the bending radius of the cable.

3.1.20.3 twisting. Flexing and bending at less than the bending radius of the cable.

3.1.20.4 vibration, high. Items that exceed the vibration limitations shown in Table 1:

Table 1—Vibration limitations

Frequency range (Hz)	Amplitude (mm)
4–15	0.763 ± 0.152
16–25	0.508 ± 0.102
26–33	0.254 ± 0.051
34–40	0.128 ± 0.025
40–50	0.076 + 0.000 – 0.025

Copyright © 2001 IEEE. All rights reserved.

Copyright The Institute of Electrical and Electronics Engineers, Inc.
Provided by IHS under license with IEEE
No reproduction or networking permitted without license from IHS
Not for Resale

3.1.21 medium voltage (MV) cable: Medium voltage single or multiphase solid dielectric insulated conductor or cable rated 2001 V or higher as defined by NEC Article 326.

3.1.22 oil-resistant: Ability to withstand exposure to oil as defined by UL 83, Safety Standard for Thermoplastic Insulated Wires.

3.1.23 shipboard cable, marine: Armored or nonarmored cable constructed in accordance with this recommended practice, and certified as "Shipboard Cable, Marine" by a nationally recognized testing laboratory (NRTL).

3.1.24 sunlight-resistant: Ability to withstand exposure to direct sunlight as defined by UL 62, Flexible Cord and Fixture Wire.

3.2 Abbreviations and acronyms

ABS	American Bureau of Shipping
AHJ	Authority having jurisdiction
AWG	American Wire Gauge
CDA	Copper Development Association
CWCMC	Continuous Corrugated Metal Clad
ICEA	Insulated Cable Engineers Association
NRTL	Nationally recognized testing laboratory
PE	Polyethylene
PVC	Polyvinylchloride
USCG	United States Coast Guard

4. Government codes, rules, and regulations

Federal regulatory agencies have established certain requirements for the design, installation, and operation of facilities in marine applications. These requirements may influence the design, installation, and operation of the electrical systems. The following codes may pertain to offshore oil and gas producing operations and should be used when applicable:

4.1 Code of federal regulations

a) Title 30, Part 250, Oil and Gas and Sulfur Operation in the Outer Continental Shelf (US Department of the Interior, Minerals Management Service).
b) Title 33, Subchapter N, Outer Continental Shelf Activities, Parts 140–147 (USCG).
c) Title 46, Shipping Subchapter I-A, Parts 107-108, Mobile Offshore Drilling Units (USCG).
d) Title 46, Shipping Subchapter J. Electrical Engineering, Parts 110–113 (USCG).

Copyright © 2001 IEEE. All rights reserved.

Copyright The Institute of Electrical and Electronics Engineers, Inc.
Provided by IHS under license with IEEE
No reproduction or networking permitted without license from IHS
Not for Resale

5. Cable construction

5.1 Conductors

5.1.1 General

The conductors should be of soft annealed copper wire. All conductors should be tinned or alloy coated where necessary to ensure compatibility with primary insulation.

5.1.2 Composition

Conductors should be manufactured in accordance with the most current edition of following American National Standards: ASTM B3, B8, B33, B172, B173, B174, B189, and B496.

Metric conductors meeting IEC 60228 are also allowed.

5.1.3 Stranding

The construction requirements and nominal resistance of standard Class B concentric conductors are found in Table 10. Combination stranded, compressed stranded to a reduction in diameter of 3% maximum of concentric stranded conductors, flexible stranded conductors, or conductors as described in Table 11 may be substituted for Class B concentric stranded conductors. Compact stranded conductors may not be used in areas subjected to vibration or flexing.

5.1.4 Separator

Where required to ensure free stripping, a suitable separator tape may be applied to the conductor.

The separator shall be colored or shall be opaque to make the separator clearly distinguishable from the conductor once the insulation is removed. The color shall be other than copper, silver, green, or green and yellow and shall be solid, striped, or in some other pattern.

5.2 Conductor shielding

Conductor shielding should be used on conductors of cables rated above 2000 V.

Conductor shielding should be an extruded semiconducting compound to a minimum thickness of 0.305 mm. The semiconducting compound should have an operating temperature equal to or greater than that of the overlying layer of insulation. It should be firmly bonded to the overlying layer of insulation with no protrusions into the insulation exceeding 0.254 mm. A semiconducting nonmetallic tape with a minimum thickness of 0.0635 mm may be used over the conductor and under the extruded semiconducting layer.

Extruded conductor shielding should have a maximum volume resistivity of 100 000 Ω·cm at room temperature and at the maximum normal operating temperature of the cable. Extruded conductor shielding should meet the following requirements when tested according to procedure in UL 1072 or NEMA WC 74.

a) Elongation after air oven at 121 ± 1 °C for 168 hours, minimum 100%
b) Brittleness temperature, not warmer than –10 °C

For discharge resistant cables the conductor shield shall consist of a nonconducting high permittivity extruded compound as designated in NEMA WC 74, subclauses 3.3.2 and 9.16.

Copyright © 2001 IEEE. All rights reserved.

Copyright The Institute of Electrical and Electronics Engineers, Inc.
Provided by IHS under license with IEEE
No reproduction or networking permitted without license from IHS
Not for Resale

5.3 Insulation

5.3.1 General

The insulation should be one of the types shown in Table 2. For 5000 V and above, Type E rated at 105 °C meeting UL 1072 may be used.

Table 2—Insulation types

Insulation-type designation			Max conductor temperature °C
T	PVC	Polyvinylchloride	75
T/N	PVC/polyamide	Polyvinylchloride/nylon	90
E	EPR	Ethylene propylene rubber	90
X	XLPE	Cross-linked polyethylene	90
LSE	LSEPR	Low-smoke, halogen-free ethylene propylene rubber	90
LSX	LSXLPO	Low-smoke, halogen-free cross-linked polyolefin	90
S	Silicone	Silicone rubber	100
P	XLPO	Cross-linked polyolefin	100

5.3.2 Properties

The physical and electrical properties of Type(s) T, T/N, E, X, LSE, LSX, S, and P insulation materials should meet the requirements of Table 12, Table 13, or Table 14. The material of the nylon jacket for Type T/N should additionally meet the requirements of ASTM-D4066 Type VIII. The manufacturer should perform type tests and periodic testing to ensure insulation materials meet these requirements.

5.3.3 Thickness of insulation

The average thickness of T, T/N, E, X, LSE, LSX, S, and P insulation should not be less than the values given in Table 15. The minimum thickness at any point should not be less than 90% of the minimum average.

5.4 Insulation shield (5–35 kV shielded cable)

Shielded cable rated 5–35 kV shall contain an insulation shield in accordance with UL 1072.

The insulation shield compound should be free stripping from the underlying insulation. Minimum adhesion requirements, per UL 1072, shall be maintained.

These cables should contain the metallic shield of 5.18.4, 5.18.5, 5.18.6, and 5.18.7.

5.4.1 Rating of metallic shield

When specified by the user, the metallic shield, or combination of metallic shield and grounding conductors (optional), shall have sufficient cross-sectional area to carry the ground fault current for the time duration specified. The ICEA method shall be used for calculating the cross-sectional area.

Copyright © 2001 IEEE. All rights reserved.

Copyright The Institute of Electrical and Electronics Engineers, Inc.
Provided by IHS under license with IEEE
No reproduction or networking permitted without license from IHS
Not for Resale

5.5 Tapes

Where binder or separator tapes are provided, a polyester film tape or compound-filled tape should be used. Where a compound-filled tape is used, the tape should be made from cloth treated on one or both sides with an insulating compound.

5.6 Glass braid

Silicone rubber insulated conductors should be covered with a glass braid with the same coverage as listed in 5.14.2. Silicone insulation requires the glass braid covering the insulation to be coated with a suitable anti-fraying coating.

5.7 Conductor identification

Conductor identification of distribution and control cables should be an Arabic number plus a number to be printed on single-colored insulation. Example: "1-ONE," "2-TWO," etc. or "1-BLACK," "2-WHITE," etc., per color code Table 22 or Table 23. The legend shall be repeated at intervals not exceeding 8 cm. The characters shall be clear and legible. Colored insulation may be used as an alternate. If an insulated conductor is functioning as a grounding conductor (normally not a current carrying conductor) in a distribution system, then it shall be colored as green or green and yellow.

Conductor identification of signal cable:

a) Pairs should contain one black insulated conductor and one white (or red) insulated conductor. The pair number should be identified on the pair. Pair numbering should be sequential and start from the center of the cable.
b) Triads should contain one black insulated conductor, one white insulated conductor, and one red insulated conductor. The triad number should be identified on the triad. Triad numbering should be sequential and start from the center of the cable.

5.8 Cabling

Conductors, pairs, triads, or groups of conductors should be cabled in concentric layers (see Table 3).

Table 3—Cable or unit lay

No. of conductors or units	Maximum lay length
2 conductors or units	30 × individual conductor or unit diameter
3 conductors or units	35 × individual conductor or unit diameter
4 conductors or units	40 × individual conductor or unit diameter
5 or more conductors or units	15 × calculated overall diameter of the outer layer

5.9 Fillers

Fillers should be nonhygroscopic and compatible with other cable components. Fillers may be used, as necessary, to give the completed cable a substantially circular cross section.

Copyright © 2001 IEEE. All rights reserved.

Copyright The Institute of Electrical and Electronics Engineers, Inc.
Provided by IHS under license with IEEE
No reproduction or networking permitted without license from IHS
Not for Resale

5.10 Composite cables with optical fibers

Cables covered in Clause 5 may include optical fiber members.

5.11 Shielding

When required, instrumentation and signal cables shall contain shielded components, which may consist of shielding over single conductors, pairs, triads, groups, and/or the completed cable core.

5.11.1 Individually shielded components and overall shielding

5.11.1.1 Shield types and drains

The shielding should consist of either polyester/aluminum tape applied helically with a minimum overlap of 25% or a bare or coated copper braid. Where a polyester/aluminum tape shield is used, a coated copper, stranded drain wire should be applied in contact with the aluminum side.

The size of the drain wire should be no smaller than two gauge sizes less than the instrumentation or signal circuit conductor size.

Where a braided coated or bare copper shield is used, it should be constructed using a minimum of 34 AWG wire.

5.11.1.2 Shield identification

Cables with individual and overall shielding should be identified as such in accordance with 5.19.1.2.

5.12 Cable jackets

5.12.1 General

The jacket should be thermoplastic Type T (PVC) or TPO (TPPO), thermosetting Type CP (CSPE), CPE, N (PCP), or L (XLPO) complying with the requirements of Table 16 or Table 17. The manufacturer should perform type tests and periodic testing to ensure jacket materials meet these requirements. The temperature rating of a jacket shall be not less than 15 °C lower than the temperature rating of the insulation.

5.12.2 Thickness of overall jacket

The average thickness of the cable jacket is shown in Table 18. The minimum thickness at any point should not be less than 80% of the average values shown.

5.13 Marker

A durable printing or embossing on the jacket or a marker under the cable jacket should provide cable identification. Marker material should be suitable for its service. Marking should give the following information at intervals not exceeding 1 m:

a) Manufacturer
b) Cable designations (see 5.19)
c) Voltage rating
d) The listing (or classification) mark of an independent product testing and certification organization

Copyright © 2001 IEEE. All rights reserved.

Copyright The Institute of Electrical and Electronics Engineers, Inc.
Provided by IHS under license with IEEE
No reproduction or networking permitted without license from IHS
Not for Resale

e) Applicable specification and the year of the standard, e.g., IEEE Std 1580-2001
f) Other information that does not confuse or mislead may be added to the marking (such as the year of manufacture)

Only cable that is in total conformance with the requirements of this recommended practice should be marked "IEEE Std 1580-2001."

5.14 Armor

5.14.1 General

Armor should be basket-weave type braid or continuous corrugated metal. The armor is not to be used as a shield or ground conductor.

5.14.2 Basket-weave armor

The armor should consist of wire laid closely together, flat and parallel, and forming a basket weave that should firmly grip the cable. The wire should be 0.32 mm diameter ± 0.01 mm, and should be free from cracks, splits, or other flaws. The wire should be commercial bronze, aluminum, or tinned copper. The weave should be either the one over-one under or the two over-two under type. The selection of the number of ends per carrier and the number of carriers per braider should be such as to produce a basket weave with a braid angle and coverage within the limits shown in Table 4.

Table 4—Braid angle and coverage

Diameter over jacket (mm)	Percent coverage		Braid angle	
	Min	Max	Min	Max
0–15.24	88	94	30	60
15.25–25.4	88	94	35	60
25.41–38.1	88	94	40	70
38.11–50.8	88	94	45	70
50.81 and larger	88	94	50	80

Where the percent coverage = $(2F - F^2)\ 100$

and

$$F = \frac{NPd}{\sin a}$$

where

a = angle of braid with axis of cable:

$$\tan a = \frac{2\ \pi\ DP}{C}$$

Copyright © 2001 IEEE. All rights reserved.

Copyright The Institute of Electrical and Electronics Engineers, Inc.
Provided by IHS under license with IEEE
No reproduction or networking permitted without license from IHS
Not for Resale

d = diameter of individual braid wire (mm)
C = number of carriers
D = diameter of cable under armor (mm)
N = number of wires per carrier
P = picks per mm of cable length

The maximum number of ends per carrier should conform to the values shown in Table 5.

Table 5—Maximum ends per carrier

	Maximum number of ends per carrier	
Cable diameter under armor (mm)	**One over-one under**	**Two over-two under**
0–10.16	8	5
10.17–20.32	12	8
20.33–38.1	15	10
38.11 and larger	20	10

5.14.2.1 Aluminum armor

Aluminum armor braid should be aluminum alloy 5154 or an equivalent alloy having a minimum tensile strength of 350 N/mm^2 and a minimum elongation of 2% in 254 mm.

5.14.2.2 Commercial bronze armor

Commercial bronze armor braid should be annealed 90-10 bronze; Copper Development Association (CDA) alloy number 220.

5.14.2.3 Tin-coated copper armor

Tin-coated copper armor braid should meet the requirements of ASTM B33. An overall sheath is required on cables with a tin-coated armor.

5.14.2.4 Continuous corrugated metal armor

This armor should be a continuous corrugated metal tube in accordance with the requirements of UL 1569 (Type MC cable). The armor material should be copper free aluminum alloy (containing no more than 0.4% of copper), commercial bronze, copper, or stainless steel. An overall sheath is required on cables with a continuous corrugated metal armor of aluminum or copper.

5.15 Overall sheath

Where an overall sheath is applied, the sheath material should be in accordance with the requirements for cable jackets in 5.12. The overall sheath will increase the cable diameter and weight. An optional separator may be used over the armor to ensure strippability.

5.16 Dimension and weight tolerances

The dimensional and weight values given in Table B.1 through Table B.16 are for informational purposes only. As these values vary from manufacturer to manufacturer, a consultation is recommended with individual manufacturers for specific dimensional and weight values.

Copyright © 2001 IEEE. All rights reserved.

Copyright The Institute of Electrical and Electronics Engineers, Inc.
Provided by IHS under license with IEEE
No reproduction or networking permitted without license from IHS
Not for Resale

5.17 Tests on finished cable

Finished cable should be tested in accordance with the requirements shown in Table 6.

Table 6—Performance test requirements

Test to be performed	Test categories		
	Type test (TT)[a]	Production sample (PST)[b]	Routine test (RT)[c]
Insulation (Table 12, Table 13, Table 14, and Table 15)	X	X	—
Jacket (Table 16, Table 17, and Table 18)	X	X[d]	—
High voltage (5.17.1)	—	X	X
Partial discharge (5.17.2)	—	—	X
Conductor resistance (5.17.3)	—	—	X
Insulation resistance (5.17.4)	—	—	X
Flammability (5.17.5)	X	X[e]	—
Ease of stripping (5.17.6)	—	X	—
Salt water immersion (5.17.7)	X	—	—
Cable immersion in oil (5.17.8)	X	—	—
Pull-through metal plates (5.17.9)	X	—	—
Bending endurance (5.17.10)	X	—	—
Cold bend test (5.17.11)	X	—	—
Cold impact test (5.17.12) (optional)	X[f]	—	—
Vibration (5.17.13)	X[g]	—	—
Incidental motion (repeated flexing) (5.17.14)	X[h]	—	—
Insulation discharge resistance test (5.17.15)	X	—	—

[a]Type tests (TT)—Type tests are the minimum initial testing for a manufacturer to determine compliance with this recommended practice. TT should be qualified by a third party NRTL as meeting this recommended practice. Unless otherwise specified, TT should be performed on a 3 conductor 6 AWG cable for power and distribution, 7 conductor 12 or 14 AWG cable for control, and a 7 or 8 pair 18 AWG for signal cables. Any other cables in their respective cable designation for distribution, control, or signal that are 23 mm in diameter or larger may also be considered representative. This does not relieve the manufacturer from ensuring compliance with the test requirements for all cable types and sizes.

[b]Production sample tests (PST)—Production sample tests should be performed at the frequency established in NEMA WC 54 (ICEA T-26-465). Where no frequency is identified for a particular test in NEMA WC 54 (ICEA T-26-465), the testing frequency should be determined by the product certification organization.

[c]Routine tests (RT)—Routine tests should be performed on each length of finished cable.

[d]PST for weatherometer and mechanical water absorption as related to the jacket/sheath shall be done at a frequency of every three years.

[e]PST for flammability and when invoked for smoke, acid gas, and toxicity tests as related to the insulation/jacket/sheath shall be done at a frequency of every three years.

[f]This test applies to Transport Canada requirements test at –35 °C cold impact test per clause 4.13 of CSA 22.2 No. 03.

[g]This test applies to Type MC (CWCMC) for use in areas of high vibration.

[h]This test applies to Type MC (CWCMC) for use in areas of repeated flexing.

Copyright © 2001 IEEE. All rights reserved.

Copyright The Institute of Electrical and Electronics Engineers, Inc.
Provided by IHS under license with IEEE
No reproduction or networking permitted without license from IHS
Not for Resale

5.17.1 High voltage test

Each reel of finished cable should be tested and successfully withstand for a period of five minutes the high-voltage ac test potential given in Table 19, as applicable. The ac potential should be applied between conductor (or conductors) and the metallic sheath, metallic shield, metallic armor, or water as described in 5.17.1.1, 5.17.1.2, 5.17.1.3, or 5.17.1.4. The test should be in accordance with IEEE Std 4.

5.17.1.1 Unshielded or unarmored cable

Each reel of single conductor unshielded or unarmored cable should be immersed in water for at least 6 hours. The ac test potential should be applied between the insulated conductor and the metal water tank or other electrode immersed in the water if the tank is nonmetallic. For single conductor cables, rated 0–2000 V manufactured without shield or armor, the spark test requirement of UL 1581, section 900, with the values of Table 20 may be used in lieu of wet tank testing.

5.17.1.2 Shielded or armored cable

For shielded or armored single conductor cables, the voltage tests should be applied between the conductor and the shield or armor.

5.17.1.3 Cables having 2 to 5 conductors

For cables having from 2 to 5 conductors, with or without metallic armor, the voltage tests should be applied in turn between each conductor and all other conductors connected together and to the metal covering, if any.

5.17.1.4 Cables having more than 5 conductors

For cables having more than 5 conductors, the voltage test should be applied as follows:

a) Between all conductors of uneven number in all layers and all conductors of even number in all layers
b) Between all conductors of even layers and all conductors of uneven layers
c) Between the first and last conductors of each layer where there are an uneven number of conductors

5.17.2 Partial discharge test

Shielded cables rated 5 kV and higher should comply with the partial discharge test requirements of UL 1072. This test is not applicable to discharge resistant cables.

5.17.3 Conductor resistance test

Conductor resistance should be measured on finished cable in accordance with the procedures outlined in UL 1581, section 220, and corrected to 20 °C or 25 °C. Maximum resistance values should be in accordance with the appropriate standards referenced in 5.1.2.

5.17.4 Insulation resistance test[11]

Each reel of finished cable should have an insulation resistance measured between each conductor and ground (metallic sheath, metallic shield, metallic armor, or water).

For single conductor cables rated 0–2000 V manufactured without shield or armor, the insulation resistance test is not required when spark tested according to the spark test requirement of UL 1581, section 900, with the values of Table 20 in this recommended practice.

[11]For a parallel treatment using English units, see Annex C.

Copyright © 2001 IEEE. All rights reserved.

Copyright The Institute of Electrical and Electronics Engineers, Inc.
Provided by IHS under license with IEEE
No reproduction or networking permitted without license from IHS Not for Resale

5.17.4.1 Method of test

Compliance with the insulation resistance test is determined in accordance with the method described in subclause 4.28.2 of CSA Standard C22.2 No. 03 or UL 1581. The insulation resistance constant *K* for a test at 15.6 °C is obtained in Table 12, Table 13, or Table 14 for the specific insulation under test.

The current should be measured after one minute with a continuous direct-current potential of not less than 100 V nor more than 500 V, the conductor being negative to ground. If the test for insulation resistance is carried out in water or air having a temperature different from 15.6 °C, the measured value should be multiplied by the proper correction factor, *M,* obtained in Table 21. This factor appears in the formula for insulation resistivity.

$$R = KM\log_{10}\frac{D}{d}$$

where

R = Insulation resistivity (MΩ·km)
K = insulation resistance constant (from Table 12, Table 13, or Table 14) (MΩ·km)
M = Temperature correction factor to 15.6 °C
D = Diameter over the insulation
d = Diameter under the insulation

The factor *M* should be determined in accordance with the method of 5.17.4.2.

The measured insulation resistivity is related to the measured insulation resistance of the sample under test by the formula

$$R = 0.001R_{meas}L$$

where

R = insulation resistivity (MΩ·km)
R_{meas} = measured insulation resistance (MΩ)
L = length of the test sample (m)

5.17.4.2 Test procedure for determining the multiplying-factor column for adjusting insulation resistance

5.17.4.2.1 Samples

Two samples, conveniently of a No. 14, 12, or 10 AWG solid conductor with a 1.14 mm wall of insulation, are to be selected as representative of the insulation under consideration. The samples are to be of a length (at least 60 m) that yields insulation-resistance values that are stable within the calibrated range of the measuring instrument at the lowest water-bath temperature.

5.17.4.2.2 Water bath temperature

The two samples are to be immersed in a water bath equipped with heating, cooling, and circulating facilities. The ends of the samples are to extend at least 60 cm above the surface of the water to reduce electrical leakage. The samples are to be left in the water at room temperature for 16 hours before adjusting the bath temperature to 10.0 °C or before transferring the samples to a 10.0 °C bath.

Copyright © 2001 IEEE. All rights reserved.

Copyright The Institute of Electrical and Electronics Engineers, Inc.
Provided by IHS under license with IEEE
No reproduction or networking permitted without license from IHS
Not for Resale

5.17.4.2.3 DC Resistance

The dc resistance of the metal conductor is to be measured at applicable intervals of time until the temperature remains unchanged for at least five minutes. The insulation then is to be considered as being at the temperature of the bath indicated on the bath thermometer.

5.17.4.2.4 Test temperatures

Each of the two samples is to be exposed (5.17.4.2.3 applies) to successive water temperatures of 10.0, 16.1, 22.2, 27.8, and 35.0 °C and returning, 27.8, 22.2, 16.1, and 10.0 °C. Insulation-resistance readings are to be taken at each temperature after equilibrium is established.

5.17.4.2.5 Plot

The two sets of readings (four readings in all) taken at the same temperature are to be averaged for the two samples. These four average values and the average of the single readings at 35.0 °C are to be plotted on semilog paper. A continuous curve (usually a straight line) is to be drawn through the five points. The value of insulation resistance at 15.6 °C is then to be read from the graph.

5.17.4.2.6 Results

The resistivity coefficient C for a 1 °C change in temperature is to be calculated to two decimal places by dividing the insulation resistance at 15.0 °C read from the graph by the insulation resistance at 16.0 °C. The temperature correction factor M required to correct to the standard test temperature of 15.6 °C is then calculated from the following formula:

$$M = C^{(t - 15.6)}$$

where

t is the actual test temperature in degrees Celsius.

The columns of Table 21 give M for various values of C and t.

5.17.5 Flammability test

All cable constructions covered in Clause 5 should be flame retardant and should meet IEEE Std 1202-1991.

Cables meeting the flame and smoke requirements of UL 1685, Vertical Tray Fire-Propagation and Smoke-Release Test for Electrical and Optical-Fiber Cables (FT4 / IEEE 1202 flame test with optical density check) may bear the "-LS" (limited smoke) marking. Cable damage height may not exceed 1.5 m as measured from the lower edge of the burner face and total smoke release may not exceed 150 m^2 with a peak rate of smoke release not to exceed 0.40 m^2/s.

Cables designated fire resistant (-FS), in addition to meeting the flame test of IEEE Std 1202-1991, should also meet the circuit integrity flame test with the equipment of IEC 60331-11 and the procedures of IEC 60331-21 for cables rated to and including 1000 V; IEC 60331-23 for electric data cable; or IEC 60331-25 for optical fiber cable.

UL 1581 VW-1 is a requirement for insulated conductors installed as single conductors outside a metallic enclosure (switchboard, conduit, pipe, electrical box, etc.). Compliance should be determined by testing a 14 AWG or smaller insulated conductor.

Copyright © 2001 IEEE. All rights reserved.

Copyright The Institute of Electrical and Electronics Engineers, Inc.
Provided by IHS under license with IEEE
No reproduction or networking permitted without license from IHS
Not for Resale

5.17.6 Ease of stripping test

Cable should be tested in accordance with the following procedure:

a) A specimen of multiple conductor cable approximately 38 cm long should have its jacket and filler material cut using a razor blade or similar instrument.

b) The cut should be longitudinally and vertically down to the insulation for approximately 15 cm.

c) A second cut around the circumference of the cable is to be made at the end of the first cut.

d) The resulting jacket piece is then to be removed by pulling at right angles away from the cable. When the jacket is removed, the cable core should show no evidence of damage. Remaining particles, which can be removed by light brushing, are acceptable.

e) A 76 mm length of the insulation should be stripped from a sample length of the finished stranded conductor and the outer layer of strands opened. When the insulation is removed, there should be no evidence of insulation compound beneath the outer layer of conductor strands.

5.17.7 Salt water immersion test

Cable should be tested in accordance with the following procedure:

Three 1.1 m lengths of cable should be immersed in a 20% (by weight) common salt (sodium chloride) solution at 60 °C ± 1 °C for 240 hours. The cable should be immersed in a U-bend such that each leg of the U-bend of the cable is 30 cm above the water.

After immersion in salt water, the cable should comply with the following:

a) The cable should pass the dielectric voltage withstand test described in 5.17.1.

b) The mechanical properties of the jacket or insulation should not be degraded to the point where they will crack when wound around a mandrel having a diameter equal to nine times the sample overall diameter.

c) The insulation and jacket should not degrade to the point where either will crack or separate from the cable during the conditioning or during the testing described in items a) or b) above.

5.17.8 Cable immersion in oil test

Cable should be tested in accordance with the following procedure:

Three 1.1 m jacketed lengths of cable should be immersed in IRM 902 oil at 100 °C ± 1 °C for 96 hours or as an alternative at 60 °C ± 1 °C for 60 days. The cable should be immersed in the oil in a U-bend such that each leg of the U-bend is 30 cm above the surface of the oil.

After immersion in oil, the cable should comply with the following:

a) The cable should pass the dielectric voltage withstand test described in 5.17.1.

b) The mechanical properties of the jacket or insulation should not be degraded to the point where they will crack when wound around a mandrel having a diameter equal to nine times the sample overall diameter.

c) The insulation and jacket should not degrade to the point where either will crack or separate from the cable during the conditioning or during the testing described in items a) or b) above.

Copyright © 2001 IEEE. All rights reserved.

Copyright The Institute of Electrical and Electronics Engineers, Inc.
Provided by IHS under license with IEEE
No reproduction or networking permitted without license from IHS
Not for Resale

5.17.9 Pull-through metal plates test

Cable should be tested using the apparatus and procedure described below:

Apparatus

a) The metal plates for the test set up shown in Figure 1 are to be four 150 mm or longer lengths of 12 mm × 100 mm cold rolled steel. Both ends of each length are to be cut perpendicular to the long surfaces.

b) Three holes of the size given in Table 7 are to be bored through the broad faces of each plate as shown in Figure 1 (view of broad face). The longitudinal axis of the holes are to be parallel and at an angle of 15° to the horizontal as shown in the end view, and 38 mm apart. The edges of the hole are to be reamed sufficiently to remove burrs and rough edges caused by the drilling.

Table 7—Hole diameters for pull-through test

Calculated diameter over finished round cable or length of major axis of finished flat cable (mm)	Nominal diameter of each hole (mm)
0–18.04	28.6
18.05–20.32	31.8
20.33–22.22	34.9
22.23–24.13	38.1
24.14–26.03	41.3
26.04 and larger	1-1/2 times cable OD

An open, rigid metal frame is to be provided on which the four plates are to be supported on edge (broad faces vertical) at approximately 2.13 m above the floor. The centerlines are to be 406 mm apart and parallel to one another in a horizontal plane. The plates are to be secured to the frame with all of their holes inclined in the same direction (longitudinal axis of holes parallel); see the four end views in Figure 1 (top view). The plates are also to be progressively offset a horizontal distance of 150 mm as also shown in Figure 1, which is a view looking down from above the plates.

a) A reel of finished cable mounted on a stand should be located so that the distance between the bottom of the cable reel and a line perpendicular to the center of the plates is 2 m. The distance between the first plate and a line tangent to the coil at the point where the cable comes off the coil is 450 mm. Upon completion of the period of cooling (24 hours at –10 °C in air), the procedures described in the following paragraphs are to be carried out immediately.

b) One end of the sample is to be threaded in succession through the holes labeled A, B, C, and D in Figure 1. As soon as the first part of the sample has been threaded through the four holes, the end of the sample emerging from hole D (head end) is to be grasped manually so that the cable emerges from hole D at an angle of about 45° to the vertical. While maintaining this angle, pull 15 m of the sample entirely through the holes until the end of this sample (tail end) emerges from hole D. The sample is to be pulled through rapidly, and no effort is to be made to straighten or adjust the sample except to remove kinks that would prevent the sample from being pulled completely through the four holes. All of the pulling is to be done from beyond hole D, not from between plates.

Copyright © 2001 IEEE. All rights reserved.

Copyright The Institute of Electrical and Electronics Engineers, Inc.
Provided by IHS under license with IEEE
No reproduction or networking permitted without license from IHS
Not for Resale

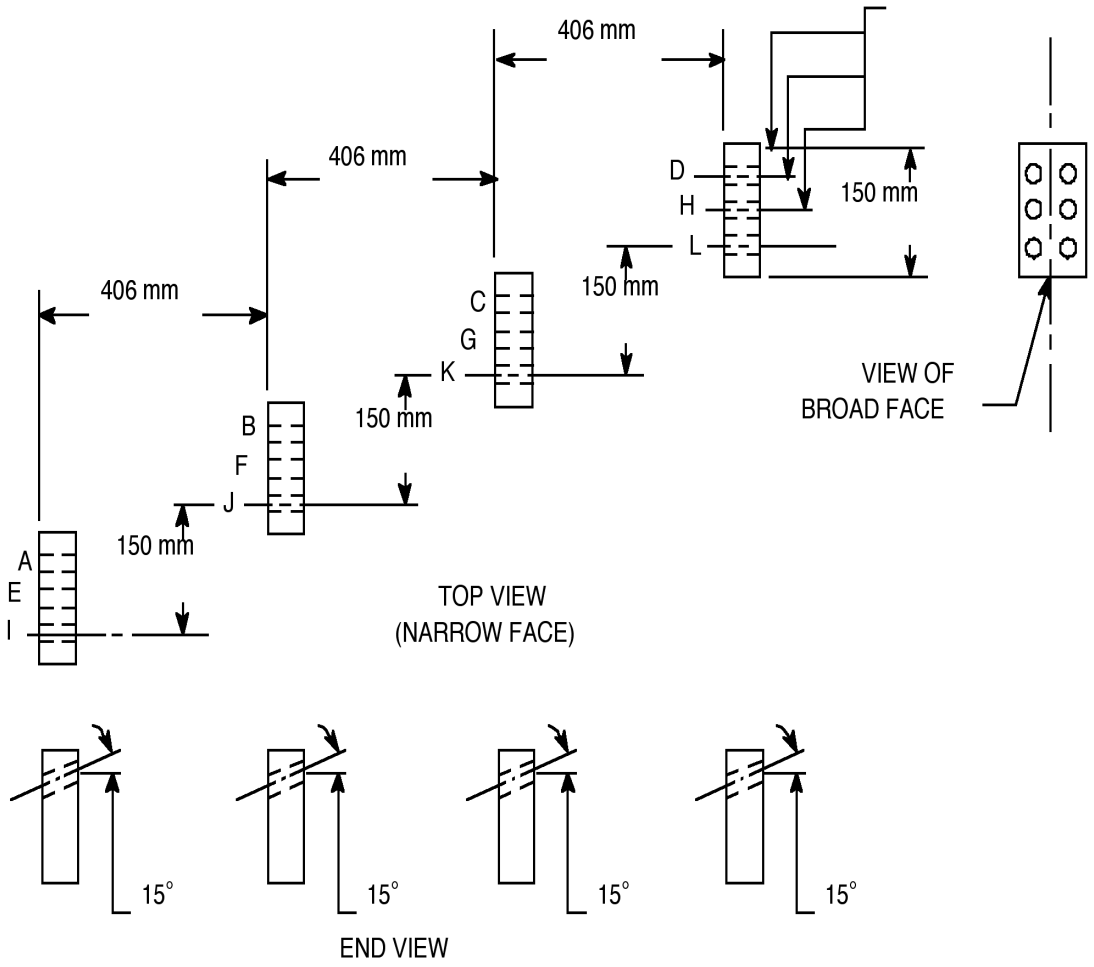

Figure 1—Test setup for pull-through metal plates test

c) As soon as the tail end of the sample emerges from hole D, the sample is to be cut to provide a 15 m length. The head end of this sample is to be threaded in succession through holes E, F, G, and H. The entire length of the sample is to be pulled through in the manner indicated in the preceding paragraph.

d) As soon as the tail end of the sample emerges from hole H, the head end of the sample is to be threaded in succession through holes I, J, K, and L. The entire length of the sample is to be pulled through in the manner indicated in paragraph b). The overall sample is to be examined visually to determine if the cable is damaged and the degree of damage.

There should be no damage to the overall covering or jacket to the extent that the parts of the cable underlying the covering or jacket are exposed to view.

5.17.10 Bending endurance test

Cable should be tested in accordance with the following procedure:

After a period of 4 hours in a cold chamber at a temperature of –25 °C and while at that temperature, each sample is to be tightly wound for three turns around a mandrel having a diameter equal to 12 times the overall diameter of the specimen. The specimen is to be straightened to its original position, and then bent for

Copyright © 2001 IEEE. All rights reserved.

Copyright The Institute of Electrical and Electronics Engineers, Inc.
Provided by IHS under license with IEEE
No reproduction or networking permitted without license from IHS
Not for Resale

three turns in the opposite direction and then straightened. This procedure is to be repeated 9 more times for a total of 10 times.

There should be no evidence of the cable insulation or jacket cracking because of this bending test. The specimens are then to be subjected to the dielectric withstand test described in 5.17.1. The results of the dielectric withstand test should meet the requirements specified for that test.

5.17.11 Cold bend test

Cable should be tested in accordance with the following procedure:

After a period of 4 hours in a cold chamber at the temperature shown in Table 8 and while at that temperature, each sample is to be tightly bent 180° around a mandrel having a diameter equal to eight times the overall diameter of the specimen. The test should be conducted in accordance with clause 4.12.1 of CSA Standard C22.2 No. 0.3 or Section 580 of UL 1581.

There should be no evidence of cracking, when examined under normal or corrected to normal vision of the cable insulation, insulation shield, or jacket as a result of this bending test.

Table 8—Temperature requirements for cold bend test

Cable jacket		Test temperature (°C) (no higher than)
T	PVC	–25
CP	CSPE	–40
N	PCP	–40
CPE		–40
L	XLPO	–40
TPO	TPPO	–25
P (integral insulation/jacket)		–55

5.17.12 Cold impact (optional)

Cables meeting Transport Canada requirements shall pass a –35 °C cold impact per subclause 4.13 of CSA C22.2, No. 0.3.

5.17.13 Vibration

Cable that is armored with continuously corrugated metal for use in areas of high vibration shall pass the vibration test of MIL-STD-167-1 or IEC 60068-2-6 to a frequency range of 50 Hz, as shown in Table 9.

Copyright © 2001 IEEE. All rights reserved.

Copyright The Institute of Electrical and Electronics Engineers, Inc.
Provided by IHS under license with IEEE
No reproduction or networking permitted without license from IHS
Not for Resale

Table 9—Vibration amplitude

Frequency range (Hz)	Amplitude (mm)
4–15	0.763 ± 0.152
16–25	0.508 ± 0.102
26–33	0.254 ± 0.051
34–40	0.128 ± 0.025
40–50	0.076 + 0.000 – 0.025

WARNING

Armored cable (both braided and continuously corrugated) approximately 91 mm in diameter may be subject to resonance in the range of marine frequencies and should be avoided, where possible.

5.17.14 Incidental motion test

(Repeated flexing as listed in Title 46 CFR, subchapter J, subclause 111.60-23 and defined in Clause 3 of this recommended practice.)

Cable that is armored with continuously corrugated metal for use in areas of repeated flexing, on fixed or floating platforms, should pass this test. The apparatus (see Annex A) is comprised of a rocker assembly mechanism and a cable support fixture. The rocker mechanism is two vertical stanchions 2 m apart on a common base. Each stanchion is fitted with a set of rollers that provide a cradle configuration to support the wheels that carry the cable support fixture. The cable support fixture is a suitable metallic conduit 2.25 m long with two 20-cm long windows cutting away approximately one-half the diameter of the conduit. The far ends of the windows are 2 m apart and are equidistant from the midpoint of the conduit. The windows align in the same plane along the axis of the conduit.

The test sample is 2.75 m long, marked to identify 104 cm from the center on each side of the center. The cable sample is installed into the conduit through the windows. The 104 cm marks are aligned with the 2 m edges of the conduit to form a catenary outside the conduit. The conduit section containing the cable is filled with a potting compound to encapsulate and anchor the cable sample in the conduit. The ends of the cable sample are exposed for voltage termination.

The sample fixture is securely set in the rocker assembly with the axis of the support fixture conduit concentric to the axis of the rocker assembly so the catenary loop hangs vertically into the neutral position.

The drive is a gear-motor with a crank and connecting rod that rotates the sample along the horizontal axis. The drive mechanism provides motion to the rocker assembly plus and minus 30° from the vertical at 60 cycles per minute. A counter registers each total cycle.

The specimens are to be subjected to the dielectric withstand test described in 5.17.1 prior to starting the test to assure sample integrity. The results of the dielectric withstand test shall meet the requirements specified for those tests. The flexibility test will be run for a total of 500 000 cycles with the dielectric test in 5.17.1 performed after every 100 000 cycles. Any failure will result in conclusion of the testing. After 500 000 cycles, the sample shall meet the dielectric test in 5.17.1. The sample will then be dissected. If any deterioration (cracking or splitting) is found in any of the cable components, the cable fails the test.

Type CWCMC cables that meet the test above may be marked “-IM”.

Copyright © 2001 IEEE. All rights reserved.

Copyright The Institute of Electrical and Electronics Engineers, Inc.
Provided by IHS under license with IEEE
No reproduction or networking permitted without license from IHS
Not for Resale

5.17.15 Insulation discharge resistance test

Shielded cable rated 5 kV and higher that is discharge resistant should comply with the requirements of the insulation corona discharge test prescribed in NEMA WC 74 (ICEA S-93-639) subclause 9.16.

5.18 Basic construction details for various cable types

5.18.1 Halogen free constructions

For halogen-free constructions, Type LSX or LSE insulation with a Type L or TPO jacket/sheath may be used.

5.18.2 Single conductor 600/1000 V or 2000 V

Single conductor, thermoset or thermoplastic insulated, jacketed, with or without armor or armor and sheath, 600/1000 V (Table B.1 or Table B.3) or 2000 V (Table B.2 or Table B.4).

Construction details are as follows:

1) Stranded copper conductor tin or alloy coated where necessary to ensure compatibility with insulation
2) Separator tape (optional)
3) Insulation, Type X, E, T, T/N, S, P, LSX, or LSE
4) Jacket, Type T, CP, N, CPE, L, or TPO jacket (optional for Type P with HD thicknesses)
5) Armor (optional)
6) Sheath, Type T, CP, N, CPE, L, or TPO sheath (optional)

5.18.3 Multiconductor 600/1000 V or 2000 V

Multiconductor thermoset or thermoplastic insulated, jacketed with or without armor and armor and sheath, 600/1000 V (Table B.1, Table B.2, or Table B.5) or 2000 V (Table B.2 or Table B.4).

Construction details are as follows:

1) Stranded copper conductor tin or alloy coated where necessary to ensure compatibility with insulation
2) Separator tape (optional)
3) Insulation, Type X, E, T, T/N, S, P, LSX, or LSE
4) Conductors cabled with fillers, where necessary, to form a round foundation
5) Binder tape, as required
6) Jacket, Type T, CP, N, CPE, L, or TPO jacket
7) Armor (optional)
8) Sheath, Type T, CP, N, CPE, L, or TPO sheath (optional)

5.18.4 Single conductor 5 kV–35 kV

Single-conductor, thermoset insulated, jacketed, with or without armor or armor and sheath, 5 kV–35 kV (Table B.6).

Copyright © 2001 IEEE. All rights reserved.

Copyright The Institute of Electrical and Electronics Engineers, Inc.
Provided by IHS under license with IEEE
No reproduction or networking permitted without license from IHS Not for Resale

Construction details are as follows:

1) Stranded copper conductor tin or alloy coated where necessary to ensure compatibility with overlying material
2) Conductor shield of semiconducting extruded compound or tape and extruded compound in accordance with UL 1072 or NEMA WC 74
3) Insulation, Type X or E with semi-conducting shield in accordance with UL 1072 or NEMA WC 74
4) Metallic shield, copper tape, or braid
5) Jacket, Type T, CP, N, CPE, L, or TPO jacket
6) Armor (optional)
7) Sheath, Type T, CP, N, CPE, L, or TPO sheath (optional)

5.18.5 Single conductor 5 kV–35 kV discharge resistant

Single-conductor, discharge resistant, jacketed, with or without armor or armor and sheath, 5 kV–35 kV (Table B.6).

Construction details are as follows:

1) Stranded copper conductor tin or alloy coated where necessary to ensure compatibility with overlying material
2) Conductor shield of nonconducting high permittivity extruded compound or tape and extruded compound in accordance with UL 1072 or NEMA WC 74
3) Insulation, Type E (discharge resistant with semiconducting shield) in accordance with UL 1072 or NEMA WC 74
4) Metallic shield, copper tape, or braid
5) Jacket, Type T, CP, N, CPE, L, or TPO jacket
6) Armor (optional)
7) Sheath, Type T, CP, N, CPE, L, or TPO sheath (optional)

5.18.6 Three conductor 5 kV–35 kV

Three-conductor, thermoset insulated, jacketed, with or without armor or armor and sheath, 5 kV–35 kV (Table B.7).

Construction details are as follows:

1) Stranded copper conductors tin or alloy coated where necessary to ensure compatibility with over-lying materials
2) Conductor shield of semiconducting extruded compound or tape and extruded compound in accordance with UL 1072 or NEMA WC 74
3) Insulation, Type X or E with semiconducting shield in accordance with UL 1072 or NEMA WC 74
4) Metallic shield, copper tape, or braid
5) Three conductors cabled with fillers, where necessary, and optional grounding conductors
6) Binder tape, as required
7) Jacket, Type T, CP, N, CPE, L, or TPO jacket
8) Armor (optional)
9) Sheath, Type T, CP, N, CPE, L, or TPO sheath (optional)

Copyright © 2001 IEEE. All rights reserved.

Copyright The Institute of Electrical and Electronics Engineers, Inc.
Provided by IHS under license with IEEE
No reproduction or networking permitted without license from IHS
Not for Resale

5.18.7 Three-conductor 5 kV–35 kV discharge resistant

Three-conductor, discharge resistant, jacketed, with or without armor or armor and sheath, 5 kV–35 kV (Table B.7).

Construction details are as follows:

1) Stranded copper conductors tin or alloy coated where necessary to ensure compatibility with over-lying materials
2) Conductor shield of nonconducting high permittivity extruded compound or tape and extruded compound in accordance with UL 1072 or NEMA WC 74
3) Insulation, Type E (discharge resistant) with semiconducting shield in accordance with UL 1072 or NEMA WC 74
4) Metallic shield, copper tape, or braid
5) Three conductors cabled with fillers, where necessary, and optional grounding conductors
6) Binder tape, as required
7) Jacket, Type T, CP, N, CPE, L, or TPO jacket
8) Armor (optional)
9) Sheath, Type T, CP, N, CPE, L, or TPO sheath (optional)

5.18.8 Signal cable, twisted pair/triad, 300 or 600/1000 V

Signal cable, twisted pair/triad, thermoset or thermoplastic insulated, jacketed, with or without armor or armor and sheath, 300 V or 600/1000 V; pairs (Table B.11, Table B.12, Table B.13, Table B.14, or Table B.16); triads (Table B.15).

Construction details are as follows:

1) Stranded conductors, AWG 16, 18, or 20
2) Insulation, Type X, E, T, T/N, S, P, LSX, or LSE
3) Two/three conductors twisted together to form a pair/triad
4) Component shield, shielded by a coated copper braid or by a polyester supported aluminum foil tape spirally wrapped in contact with a stranded coated copper drain wire (no smaller than two conductor sizes below the primary conductor size); minimum thickness polyester 0.0127 mm, aluminum foil 0.00889 mm (optional)
5) Components cabled with fillers, where necessary, to form a round foundation
6) Binder tape, as required
7) Optional overall shield, shielded by a coated copper braid or by a polyester supported aluminum foil tape spirally wrapped in contact with a stranded coated copper drain wire (no smaller than two conductor sizes below the primary conductor size); minimum thickness polyester 0.0127 mm, aluminum foil 0.00889 mm (optional)
8) Jacket, Type T, CP, N, CPE, L, or TPO jacket
9) Armor (optional)
10) Sheath, Type T, CP, N, CPE, L, or TPO sheath (optional)

5.19 Cable designations

5.19.1 Cable types T, T/N, E, P, X, LSE, LSX, and S

The following cable designations should be used in connection with the cables described in 5.18.1 to 5.18.5 inclusive. The designations are made up of letters and numbers signifying, to the extent shown below, the service, number of conductors, types of insulation, jacket, armor, and conductor size comprised of the components listed in 5.19.1.1–5.19.1.7:

Copyright © 2001 IEEE. All rights reserved.

Copyright The Institute of Electrical and Electronics Engineers, Inc.
Provided by IHS under license with IEEE
No reproduction or networking permitted without license from IHS
Not for Resale

5.19.1.1 Cable type (service symbol)

“S”	Single conductor distribution
“D”	Two conductor distribution
“T”	Three conductor distribution
“F”	Four conductor distribution
“Q”	Five conductor distribution
“C”	Control cable (1)
“TP”	Twisted pair (1)
“TT”	Twisted triad (1)

(1) = Insert AWG size of conductors following service symbol for C, TP, and TT.

5.19.1.2 Shielding

No marking	Unshielded
“OS”	Overall shield
“IS”	Individual shield
“IS-OS”	Individual and overall shield
“OBS”	Overall braid shield

5.19.1.3 Insulation type (2)

“E”	Ethylene propylene rubber
“X”	Crosslinked polyethylene
“P”	Crosslinked polyolefin
“S”	Silicone rubber
“LSX”	Low smoke, halogen-free crosslinked polyolefin
“LSE”	Low smoke, halogen-free ethylene propylene rubber
“T”	Polyvinyl chloride
“T/N”	Polyvinyl chloride/nylon

(2) = For insulation types E, X, T, T/N, and S where the VW-1 is the option, the letter “V” is added after the insulation type to indicate compliance with this optional requirement.

5.19.1.4 Jacket type

“T”	Polyvinyl chloride
“CP”	Chlorosulfonated polyethylene
“N”	Polychloroprene (neoprene)
“L”	Low smoke, zero halogen crosslinked polyolefin
“TPO”	Low smoke, zero halogen thermoplastic polyolefin
“CPE”	Thermoset chlorinated polyethylene

5.19.1.5 Armor

No marking	Unarmored
“A”	Aluminum armor
“B”	Bronze armor
“T”	Tinned copper armor
“_S”	Armor and sheath (3)
“CWCMC”	Continuously corrugated metal armor

(3) = Add the type of armor, A, B, or T, before the S.

Copyright © 2001 IEEE. All rights reserved.

Copyright The Institute of Electrical and Electronics Engineers, Inc.
Provided by IHS under license with IEEE
No reproduction or networking permitted without license from IHS
Not for Resale

5.19.1.6 Size

The wire size is designated for distribution cable by adding a dash (-), followed by the conductor size in kcmil.

5.19.1.7 Voltage rating

The rated distribution cable voltage is added to the symbol following a dash (-), as follows:

2 000 V	2 kV
5 000 V	5 kV
8 000 V	8 kV
15 000 V	15 kV
25 000 V	25 kV
28 000 V	28 kV
35 000 V	35 kV

The complete type designation should include the following parts:

— Cable type (S, D, T, F, Q, C, TP, TT)
— Shielding designation, if applicable
— Insulation type
— Jacket type
— Armor, if applicable
— "S" if jacket over armor

For Types S, D, T, F, and Q, distribution cables.

Following a dash (-), the conductor size in kcmil.

— DTTB-4 = AWG 14 (4.11 kcmil), two-conductor, polyvinylchloride-insulated, thermoplastic polyvinyl chloride jacketed, and bronze armored
— SXNA-250 = 250 kcmil, single conductor, cross-linked polyethylene insulated, thermosetting neoprene jacketed, and aluminum armor
— TPNBS-313 = 3 conductor, 313 kcmil, polyolefin insulation with neoprene jacket, bronze armor, and overall sheath

Following a second dash (-), the voltage rating:

— TPNBS-313-5KV = 3 conductors, 313 kcmil, polyolefin insulation with neoprene jacket, bronze armor, and overall sheath, 5 kV.

For Types C, TP, and TT, the number of conductors, pairs or triads, as applicable; the number of conductors of control, and the number of conductor pairs/triads of signal cable, is added to the cable designation, as follows:

— C14TCPB-20 = 20 conductor control cable, 14 AWG, thermoplastic-insulated, thermosetting chlorosulfonated polyethylene jacketed, and bronze armor
— TP18TNA-10 = 10 twisted pair signal cable, 18 AWG, thermoplastic-insulated, thermosetting neoprene jacketed, and aluminum armor
— C14PCP-3 = 3 conductor, 14 AWG, polyolefin insulated, and chlorosulfonated polyethylene jacketed
— TP (OS) 18PNBS-2 = 2 twisted pairs, 18 AWG with polyolefin insulation, overall tape shield and drain wire, neoprene jacketed, with bronze armor and overall outer sheath

Copyright © 2001 IEEE. All rights reserved.

Copyright The Institute of Electrical and Electronics Engineers, Inc.
Provided by IHS under license with IEEE
No reproduction or networking permitted without license from IHS
Not for Resale

Table 10—Construction and resistance of standard class B concentric conductors

Conductor area in circular mils	AWG or kcmil	Class B stranding			Conductor dia. (in)	Maximum dc resistance					
		Number of wires	Wire dia. (mils)	mm^2		Ohms per 1000 ft at 25 °C		Ohms per 1000 ft at 20 °C		Ohms per km at 20 °C	
						Bare	Coated	Bare	Coated	Bare	Coated
640	22	7	10.0	0.32	0.029	15.1	16.9	14.8	16.6	48.6	54.4
1020	20	7	12.6	0.52	0.036	9.51	10.5	9.33	10.3	30.6	33.8
1620	18	7	15.9	0.82	0.046	5.97	6.58	5.86	6.45	19.2	21.2
2580	16	7	19.2	1.31	0.058	4.17	4.56	4.09	4.47	13.4	14.6
4110	14	7	24.2	2.08	0.073	2.68	2.78	2.62	2.73	8.62	8.96
6530	12	7	30.5	3.31	0.092	1.68	1.75	1.65	1.72	5.43	5.64
10 380	10	7	38.5	5.26	0.116	1.06	1.10	1.04	1.08	3.41	3.55
16 510	8	7	48.6	8.37	0.146	0.666	0.693	0.654	0.68	2.14	2.23
20 820	7	7	54.5	10.55	0.164	0.528	0.550	0.518	0.539	1.70	1.77
26 240	6	7	61.2	13.30	0.184	0.419	0.436	0.411	0.428	1.35	1.40
33 090	5	7	68.8	16.77	0.206	0.332	0.346	0.326	0.339	1.07	1.11
41 740	4	7	77.2	21.15	0.232	0.264	0.274	0.259	0.269	0.848	0.882
52 620	3	7	86.7	26.66	0.260	0.209	0.218	0.205	0.213	0.673	0.700
66 360	2	7	97.4	33.67	0.292	0.166	0.172	0.163	0.169	0.534	0.555
83 690	1	19	66.4	44.47	0.332	0.131	0.136	0.129	0.134	0.423	0.440
105 600	1/0	19	74.5	53.50	0.373	0.104	0.108	0.102	0.106	0.335	0.349
133 100	2/0	19	83.7	67.44	0.419	0.083	0.086	0.0811	0.0843	0.266	0.277
167 800	3/0	19	94.0	85.02	0.470	0.0656	0.068	0.0643	0.0669	0.211	0.219
211 600	4/0	19	105.5	107.20	0.528	0.0520	0.0535	0.0501	0.0525	0.167	0.172
250 000	250 kcmil	37	82.2	126.70	0.575	0.0440	0.0458	0.0432	0.0449	0.142	0.147
300 000	300 kcmil	37	90.0	152.00	0.630	0.0367	0.0381	0.0359	0.0374	0.118	0.123
350 000	350 kcmil	37	97.3	177.30	0.681	0.0314	0.0327	0.0308	0.0321	0.101	0.105
400 000	400 kcmil	37	104.0	203.00	0.728	0.0275	0.0283	0.0270	0.0278	0.0885	0.0911
500 000	500 kcmil	37	116.2	253.30	0.813	0.0220	0.0226	0.0216	0.0222	0.0780	0.0729
600 000	600 kcmil	61	99.2	304.00	0.893	0.0183	0.0191	0.0180	0.0187	0.0590	0.0613
750 000	750 kcmil	61	110.9	380.00	0.998	0.0147	0.0151	0.0144	0.0148	0.0472	0.0486
1 000 000	1000 kcmil	61	128.0	506.70	1.152	0.0110	0.0113	0.0108	0.0111	0.0354	0.0364
1 250 000	1250 kcmil	91	117.2	633.30	1.289	0.00882	0.00904	0.00866	0.00888	0.0283	0.0291
1 500 000	1500 kcmil	91	128.4	760.00	1.412	0.00738	0.00755	0.00725	0.00740	0.0236	0.0243
2 000 000	2000 kcmil	127	125.5	1013.30	1.632	0.00555	0.00565	0.00544	0.00555	0.0177	0.0182

Tolerance for maximum resistance[12]

Single conductor	R_{max} = value from Table 10
Multiple conductor cable	
One layer of conductors	R_{max} = value from Table 10 × 1.02
More than one layer of conductors	R_{max} = value from Table 10 × 1.03
Pairs or other precabled units	R_{max} = value from Table 10 × 1.04
More than one layer of pairs or other precabled units	R_{max} = value from Table 10 × 1.05

[12]From NEMA WC-55

Copyright © 2001 IEEE. All rights reserved.

Copyright The Institute of Electrical and Electronics Engineers, Inc.
Provided by IHS under license with IEEE
No reproduction or networking permitted without license from IHS
Not for Resale

Table 11—Construction and resistance of flexible stranded conductors

Conductor area in circular mils	AWG or kcmil	Nominal stranding			Max conductor dia. (in)	Maximum dc resistance					
		Number of wires	Individual strand dia. (in)	mm^2		Ohms per 1000 ft at 25 °C		Ohms per 1000 ft at 20 °C		Ohms per km at 20 °C	
						Bare	Coated	Bare	Coated	Bare	Coated
1900	18	19	0.0100	0.96	0.049	6.95	7.21	6.82	7.06	22.4	23.2
2601	16	19	0.0117	1.32	0.059	4.27	4.52	4.19	4.43	13.7	14.5
4106	14	19	0.0147	2.08	0.074	2.68	2.85	2.63	2.79	8.63	9.15
6503	12	19	0.0185	3.29	0.093	1.69	1.79	1.66	1.75	5.45	5.74
10 319	10	37	0.0167	5.23	0.113	1.09	1.13	1.07	1.11	3.51	3.63
14 948	8	37	0.0201	7.57	0.136	0.669	0.694	0.656	0.679	2.15	2.23
24 645	6	61	0.0201	12.49	0.175	0.421	0.436	0.413	0.427	1.36	1.40
41 668	4	133	0.0177	21.11	0.258	0.276	0.286	0.271	0.280	0.889	0.918
	or 4	105	0.0201								
66 140	2	133	0.0223	33.51	0.324	0.169	0.175	0.166	0.171	0.545	0.561
	or 2	150	0.0201								
84 438	1	209	0.0201	42.79	0.361	0.135	0.140	0.132	0.137	0.433	0.449
107 467	1/0	266	0.0201	54.45	0.407	0.107	0.111	0.105	0.109	0.344	0.358
138 172	2/0	342	0.0201	70.01	0.461	0.0853	0.0885	0.0837	0.0866	0.275	0.284
168 876	3/0	418	0.0201	85.57	0.510	0.0682	0.0702	0.0669	0.0687	0.219	0.225
214 933	4/0	532	0.0201	108.91	0.575	0.0538	0.0557	0.0528	0.0545	0.173	0.179
260 991	262	646	0.0201	132.25	0.654	0.0444	0.0460	0.0436	0.0450	0.143	0.148
313 916	313	777	0.0201	159.06	0.720	0.0371	0.0384	0.0364	0.0376	0.119	0.123
373 709	373	925	0.0201	189.36	0.785	0.0308	0.0320	0.0302	0.0313	0.0991	0.103
448 451	444	1110	0.0201	227.23	0.860	0.0260	0.0270	0.0255	0.0264	0.0836	0.0866
538 141	535	1332	0.0201	272.68	0.941	0.0216	0.0224	0.0212	0.0219	0.0695	0.0718
642 780	646	1591	0.0201	325.70	1.029	0.0179	0.0186	0.0176	0.0182	0.0577	0.0597
777 315	777	1924	0.0201	393.87	1.132	0.0149	0.0154	0.0146	0.0151	0.0479	0.0495
1 109 008	1111	2745	0.0201	561.94	1.354	0.0102	0.0106	0.0100	0.0104	0.0328	0.0341

NOTE—The total number of wires should be as specified ± 1% providing that the maximum conductor diameter and conductor resistance does not exceed the values indicated.

Tolerance for maximum resistance[13]

Single conductor	R_{max} = value from Table 11
Multiple conductor cable	
One layer of conductors	R_{max} = value from Table 11 × 1.02
More than one layer of conductors	R_{max} = value from Table 11 × 1.03
Pairs or other precabled units	R_{max} = value from Table 11 × 1.04
More than one layer of pairs or other precabled units	R_{max} = value from Table 11 × 1.05

[13]From NEMA WC-55

Copyright © 2001 IEEE. All rights reserved.

Copyright The Institute of Electrical and Electronics Engineers, Inc.
Provided by IHS under license with IEEE
No reproduction or networking permitted without license from IHS
Not for Resale

Table 12—Insulation, electrical, and physical requirements; Types E, X, S, T, and T/N

Insulation material	Ethylene propylene rubber		Cross-linked polyethylene rubber		Silicone	Polyvinyl chloride	Polyvinyl chloride/nylon
Insulation-type designation	E	E[a,b]	X	X	S	T	T/N
Voltage rating (V)	0–2000	2001–35 000	0–2000	2001–35 000	0–600	0–600/1000	0–600/1000
Insulation resistance constant (*K*) at 15.6 °C MΩ·km, min	3050	6100	3050	6100	1220	610	610
Accelerated water absorption:[c] Electrical method 75 °C water:							
Dielectric constant after 1 day, max	6.0	4.0	6.0	3.5	4.0	10.0	10.0
Increase in capacitance, max 1–14 days	5.0	3.5	4.0	3.0	10.0	4.0	4.0
7 to 14 days	3.0	1.5	2.0	1.5	3.0	2.0	2.0
Stability factor after 14 days, max	1.0	1.0	1.0	1.0	1.0	1.0	1.0
Physical requirements: unaged							
Tensile strength, N/mm^2, min	8.2	4.8	12.5	12.5	5.5	13.8	13.8
Elongation at rupture, min, %	150	200	150	250	250	150	150
Aging requirements: After air oven test							
Temperature (°C)	121 ± 1	121 ± 1	121 ± 1	121 ± 1	200 ± 1	121 ± 1	136 ± 1
Duration (hours)	168	168	168	168	168	168	168
Tensile strength % of unaged, min	75	75	85	75	65	75	75
Elongation at rupture, min, % of unaged value	75	75	60	75	50	65[d]	65[d]
Heat distortion, 121 °C, max, %							
4/0 AWG and smaller	—	—	30	25	—	25	25
Larger than 4/0 AWG	—	—	10	15	—	25	25
Mandrel test for nylon jacket	—	—	—	—	—	—	no cracks
VW-1 Flame Test[e]	optional	N/A	optional	N/A	optional	optional	optional
Test procedure reference	NEMA WC 70	NEMA WC 74	NEMA WC 70	NEMA WC 74	NEMA WC 57	UL 1581	UL 1581

[a]If using discharge resistant cable insulations, the insulation should meet the requirements of NEMA WC 74 subclause 4.3.2 in lieu of the values above.
[b]Insulations for use at 105 °C should meet the requirements of UL 1072 in lieu of the above requirements.
[c]For test procedure refer to NEMA WC 57.
[d]For 6 AWG and larger, buffed samples, value is 45%.
[e]For test procedures refer to UL 1581. Compliance should be determined by testing a 14 AWG or smaller insulated conductor.

Copyright © 2001 IEEE. All rights reserved.

Copyright The Institute of Electrical and Electronics Engineers, Inc.
Provided by IHS under license with IEEE
No reproduction or networking permitted without license from IHS
Not for Resale

Table 13—Insulation, electrical, and physical requirements types LSE and LSX

	Low-smoke, halogen-free	Low-smoke, halogen-free
Insulation material	**Ethylene propylene rubber**	**Cross-linked polyolefin**
Insulation-type designation	LSE	LSX
Voltage rating (V)	0–600/1000	0–600/1000
Insulation resistance constant *(K)* at 15.6 °C, MΩ·km, min	3050	3050
Accelerated water absorption:[a] electrical method in 75 °C water:		
Dielectric constant, max	10.0	10.0
Increase in capacitance, max 1–14 days	10.0	10.0
7–14 days	4.0	4.0
Stability factor after 14 days, max	1.0	1.0
Physical requirements: unaged		
Tensile strength, N/mm^2, min	8.2	10.3
Elongation at rupture, %, min	150	150
Aging requirements: after air oven test		
Temperature (°C)	121	121
Duration (hours)	168	168
Tensile strength, % of unaged, min	75	80
Elongation at rupture, % of unaged value, min	75	80
Heat distortion, 121 °C max, %		
4/0 AWG and smaller	30	30
Larger than 4/0 AWG	10	10
Acid gas equivalent[b]		
Percent, max	5	2
Smoke index, max[b]	45	25
Toxicity index, max[b]	1.5	1.5
Halogen content, percent, max[a]	0.2	0.2
Hot creep test per ICEA T-28-562		
Temperature of air oven	150 °C ± 2 °C	150 °C ± 2 °C
Hot creep elongation, max	50%	50%
Hot creep set, max	5%	5%
VW-1 flame test[c]	pass	pass
NEMA test procedure reference	NEMA WC 70	NEMA WC 70

[a]For test procedures refer to NEMA WC 57, part 7.
[b]For test procedures refer to MIL-DTL-24643B.
[c]For test procedures refer to UL 1581. Compliance should be determined by testing a 14 AWG or smaller insulated conductor.

Copyright © 2001 IEEE. All rights reserved.

Copyright The Institute of Electrical and Electronics Engineers, Inc.
Provided by IHS under license with IEEE
No reproduction or networking permitted without license from IHS
Not for Resale

Table 14—Insulation, electrical, and physical requirements for crosslinked polyolefin insulation (type P), voltage rating 0–2000 V

Insulation resistance constant (K) at 15.6 °C, MΩ·km, min	3050
or MΩ per 1000 ft, min	10 000
Accelerated water absorption:[a] Electrical method in 75 °C water:	
Dielectric constant, max	6.0
Increase in capacitance, max 1–14 days	3.0
7–14 days	1.5
Stability factor after 14 days, max	0.5
Physical requirements: unaged	
Tensile strength, N/mm^2, min	12.5
Elongation at rupture, min, %	250
Aging requirements:	
After air oven test temperature (°C)	158 ± 1
Duration (hours)	168
Tensile strength % of unaged, min	90
Elongation at rupture, min % of unaged values	50
Heat distortion, 150 °C, max, % of unaged value 4/0 AWG and smaller	20
Larger than 4/0 AWG	10
Ozone after 24 hours exposure in concentration of .03% by volume at 90 °C ± 2 °C[b]	no cracks
Set NEMA WC 57 Clause 6.8 except gauge marks 4 in apart	3 specimens not to exceed tension set of 30%
VW-1 flame test[c]	Pass
Hot creep test per ICEA T-28-562 with following modifications:	
Temperature of air oven	175 °C ± 1 °C
Hot creep elongation, max	25%
Hot creep set, max	2%
NEMA test procedure reference	NEMA WC 70

Hot oil resistance

The insulated conductor cable diameter increase (swell) shall not exceed values shown below after the center 30 cm section of a 60 cm length of insulated conductor cable with ends stripped of 5 cm of insulation and exposed for 100 hours to the following fluids and temperatures:

Fluid	**Temperature**	**Allowable % swell**
IRM 902	150 °C	60
Diesel (fuel) oil	60 °C	60

The hot oil resistance test shall be performed on 12 AWG cable. Swelling should be evaluated no sooner than 24 hours and no later than 48 hours after immersion. The specimens should additionally show no cracks in insulation following immersion. The insulation should withstand an AC rms potential of 3500 V for five minutes conducted between conductor and aluminum foil wrapped around insulation.

[a]For test procedure refer to NEMA WC57.
[b]For test procedures refer to NEMA WC 57 or CSA C22.2 No. 0.3.
[c]For test procedures refer to UL 1581. Compliance should be determined by testing a 14 AWG or smaller insulated conductor.

Copyright © 2001 IEEE. All rights reserved.

Copyright The Institute of Electrical and Electronics Engineers, Inc.
Provided by IHS under license with IEEE
No reproduction or networking permitted without license from IHS
Not for Resale

Table 15—Thickness of extruded insulations

Rated voltage	Conductor		Insulation thickness minimum average wall											
			Type E or X		Type LSE or LSX		Type P		Type S		Type T		Type T/N	
Phase to phase (V)	(mm^2)	(AWG or kcmil)	(mm)	(in)	(mm)	(in)	(mm)	(in)	(mm)	(in)	(mm)	(in)	(mm)	(in)
0–300	0.32–0.68	(22–19)	0.38	(0.015)	0.63	(0.025)	0.38	(0.015)	0.88	(0.035)	0.63	(0.025)	0.38/0.10	(0.015/ 0.004)
	0.69–1.31	(18–16)	0.50	(0.020)	0.63	(0.025)	0.50	(0.020)	0.88	(0.035)	0.63	(0.025)	0.38/0.10	(0.015/ 0.004)
301–1000	0.32– 0.68	(22–19)	0.76	(0.030)	0.76	(0.030)	0.76	(0.030)	1.14	(0.045)	—		—	
	0.69–1.50	(18–15)	0.76	(0.030)	0.76	(0.030)	0.76	(0.030)	1.14	(0.045)	0.76	(0.030)	0.38/0.10	(0.015/ 0.004)
	1.51–4.00	(14–11)	0.76	(0.030)	0.76	(0.030)	0.76	(0.030)	1.14	(0.045)	1.14	(0.045)	0.38/0.10	(0.015/ 0.004)
	4.01–7.00	(10–9)	0.76	(0.030)	0.76	(0.030)	0.76	(0.030)	1.14	(0.045)	1.14	(0.045)	0.51/0.10	(0.020/ 0.004)
	7.01–17.0	(8–5)	1.14	(0.045)	1.14	(0.045)	1.14	(0.045)	1.52	(0.060)	1.52	(0.060)	0.76/0.13	(0.030/ 0.005)
	17.1–34.0	(4–2)	1.14	(0.045)	1.14	(0.045)	1.14	(0.045)	1.52	(0.060)	1.52	(0.060)	1.02/0.15	(0.040/ 0.006)
	34.1–107	(1–4/0)	1.40	(0.055)	1.40	(0.055)	1.40	(0.055)	2.03	(0.080)	2.03	(0.080)	1.27/0.18	(0.050/ 0.007)
	108–254	(213–500)	1.65	(0.065)	1.65	(0.065)	1.65	(0.065)	2.41	(0.095)	2.41	(0.095)	1.52/0.20	(0.060/ 0.008)
	255–400	(501–777)	2.03	(0.080)	2.03	(0.080)	2.03	(0.080)	2.79	(0.110)	2.79	(0.110	1.78/0.23	(0.070/ 0.009)
	401–508	(778–1000)	2.03	(0.080)	2.03	(0.080)	2.03	(0.080)	2.79	(0.110)	2.79	(0.110)	1.78/0.23	(0.070/ 0.009)
	509–1015	(1001-2000)	2.41	(0.095)	2.41	(0.095)	2.79	(0.110)	—		—		—	
Minimum point is 90% of minimum average.														

Copyright © 2001 IEEE. All rights reserved.

Copyright The Institute of Electrical and Electronics Engineers, Inc.
Provided by IHS under license with IEEE
No reproduction or networking permitted without license from IHS

Not for Resale

Copyright The Institute of Electrical and Electronics Engineers, Inc.
Provided by IHS under license with IEEE
No reproduction or networking permitted without license from IHS

Table 15—Thickness of extruded insulations (continued)

Rated voltage	Conductor			Type E or X			Type LSE or LSX			Type P				
Phase to phase (V)	(mm^2)	(AWG or kcmil)		(mm)	(in)		(mm)	(in)		(mm)	(in)			
1001–2000	1.51–7.00	(14–9)		1.14	(0.045)		1.14	(0.045)		1.14	(0.045)			
	7.01–34.0	(8–2)		1.40	(0.055)		1.40	(0.055)		1.40	(0.055)			
	34.1–85.0	(1–3/0)		1.65	(0.065)		1.65	(0.065)		1.65	(0.065)			
	85.1–107	(4/0)		1.65	(0.065)		1.65	(0.065)		1.65	(0.065)			
				—			—			2.67	(0.105)	(HD)		
	108–254	(213–500)		1.90	(0.075)		1.90	(0.075)		1.90	(0.075)			
				—			—			2.67	(0.105)	(HD)		
	255–400	(501–777)		2.29	(0.090)		2.29	(0.090)		2.29	(0.090)			
				—			—			3.05	(0.120)	(HD)		
	401–508	(778–1000)		2.29	(0.090)		2.29	(0.090)		2.29	(0.090)			
				—			—			3.05	(0.120)	(HD)		
	509–1015	(1001–2000)		2.79	(0.110)		2.79	(0.110)		2.79	(0.110)			
				—			—			3.05	(0.120	(HD)		

Minimum point is 90% of minimum average.

(HD) Heavy-duty insulation thicknesses should be considered for applications where installations and service conditions are such that the additional mechanical protection is considered necessary. Heavy-duty (HD) constructions are permitted supplied in single conductor sizes 4/0 AWG and larger for applications as cable external to enclosures for interconnection purposes. Where HD thicknesses are used on single conductor cables, and the thickness is applied in two layers, both layers of material should be Type P material.

Copyright © 2001 IEEE. All rights reserved.

Not for Resale

Copyright The Institute of Electrical and Electronics Engineers, Inc.
Provided by IHS under license with IEEE
No reproduction or networking permitted without license from IHS

Table 15—Thickness of extruded insulations (continued)

					Type E or X								
Rated voltage		**Conducor**			**100% level**			**133% level**					
Phase to phase (V)		**(mm^2)**	**(AWG or kcmil)**		**(mm)**	**(in)**		**(mm)**	**(in)**				
2001–5000		7.01–508	(8–1000)		2.28	(0.090)		2.92	(0.115)				
8000		13.3–508	(6–1000)		2.92	(0.115)		3.56	(0.140)				
15 000		34.0–508	(2–1000)		4.44	(0.175)		5.46	(0.215)				
25 000		42.0–508	(1–1000)		6.60	(0.260)		8.76	(0.345)				
28 000		42.0–508	(1–1000)		7.11	(0.280)		8.76	(0.345)				
35 000		54.0–508	(1/0–1000)		8.76	(0.345)		10.66	(0.420)				

Minimum point is 90% of minimum average.

(HD) Heavy-duty insulation thicknesses should be considered for applications where installations and service conditions are such that the additional mechanical protection is considered necessary. Heavy-duty (HD) constructions are permitted supplied in single conductor sizes 4/0 AWG and larger for applications as cable external to enclosures for interconnection purposes. Where HD thicknesses are used on single conductor cables, and the thickness is applied in two layers, both layers of material should be Type P material.

100% and 133% levels per UL 1072 or NEMA WC 74.

Not for Resale

Copyright © 2001 IEEE. All rights reserved.

Table 16—Jacket properties; types T, CP, N, and CPE

Jacket material	Thermo-plastic polyvinyl chloride	Thermo-setting chloro-sulfonated polyethylene	Thermo-setting neoprene	Thermo-setting chlorinated polyethylene
Jacket type designation	T[a]	CP[b]	N[c]	CPE[c]
Physical requirements unaged				
Tensile strength, N/mm^2, min	10.3	12.5	12.5	12.5
Elongation at rupture, min %	100	300	300	300
Set, max %	—	30	20	30
For 60 °C rated jacket, aging requirements:				
After air oven at °C	100 ± 1	100 ± 1	100 ± 1	100 ± 1
Hours	120	168	168	168
Tensile strength, % of unaged, min	85	85	50	85
Elongation at rupture, % of unaged, min	60	65	50	55
For 75 °C rated jacket, aging requirements:				
After air oven at °C	100 ± 1	113 ± 1	100 ± 1	113 ± 1
Hours	240	168	240	168
Tensile strength, % of unaged, min	85	85	50	85
Elongation at rupture, % of unaged, min	60	65	50	55
For 90 °C rated jacket, aging requirements:				
After air oven at °C	121 ± 1	121 ± 1	121 ± 1	121 ± 1
Hours	168	168	240	168
Tensile strength, % of unaged, min	85	85	6.2 N/mm^2 [d]	85
Elongation at rupture, % of unaged, min	60	65	50%[d]	55
After oil immersion at °C	70 ± 1	121 ± 1	121 ± 1	121 ± 1
Hours	4	18	18	18
Tensile strength, % of unaged, min	80	60	80	60
Elongation at rupture, % of unaged, min	60	60	60	60
After weatherometer aging:[e] Tensile strength, % of unaged, min	80	80	80	80
Elongation at rupture, % of unaged, min	80	80	80	80
Heat distortion 121 °C ±, max %	50	—	—	—
Heat shock, 121 °C ± 1 °C	no cracks	—	—	—
Mechanical water absorption, mg/cm^2, max	3.88	15.5	20.2	20.2
Tear, N/mm, min[f]	6.1	6.1	6.1	6.1

[a]For test procedures refer to NEMA WC 57.
[b]For test procedures refer to NEMA WC 70.
[c]For test procedures refer to NEMA WC 70 for 0–2000 V or NEMA WC 74 for 2001 V and greater.
[d]Actual values, not retention of unaged values.
[e]For test procedures refer to UL 62 or ASTM G23-69 type D.
[f]For test procedures refer to ASTM D470.

Copyright © 2001 IEEE. All rights reserved.

Copyright The Institute of Electrical and Electronics Engineers, Inc.
Provided by IHS under license with IEEE
No reproduction or networking permitted without license from IHS
Not for Resale

Table 17—Low-smoke, halogen-free jacket properties: types L (XLPO) and TPO (TPPO)

Jacket material	Thermosetting cross-linked polyolefin (XLPO)	Thermoplastic polyolefin (TPPO)
Jacket type designation	L	TPO
Physical requirements Unaged:		
Tensile strength, N/mm^2, min	8.9	9.6
Elongation at rupture, min %	160	100
Aging requirements: after air oven at		
Temperature (°C)	121 ±1	100 ± 1
Duration (hours)	168	168
Tensile strength, % of unaged, min	60	75
Elongation at rupture, % of unaged, min	60	60
After oil immersion (ASTM No. 2 or IRM 902)		
Temperature (°C)	121 ± 1	70 ± 1
Duration (hours)	18	4
Tensile strength, % retention	50	60
Elongation, % retention	50	60
Heat distortion (°C) at	121 ± 1	90 ± 1
Max %	30	25
Weatherometer[a]	Pass	Pass
Acid gas equivalent, % max[b]	2	2
Halogen content, % max[c]	0.2	0.2
Smoke index, max[b]	25	25
Toxicity index, max[b]	5	5
Hot creep test per ICEA T-28-562 with following modifications:		
Temperature of air oven (°C)	200 ± 2	
Hot creep elongation, max	25%	—
Hot creep set, max	5%	—
Tear, N/mm, min[d]	6.1	6.1
NEMA test procedure reference	NEMA WC 57, Part 7	NEMA WC 57, Part 7

[a]For test procedure refer to UL 1581.
[b]For test procedure refer to MIL-DTL- 24643B.
[c]For test procedures refer to NEMA WC 57.
[d]For test procedure, refer to ASTM D470.

Copyright © 2001 IEEE. All rights reserved.

Copyright The Institute of Electrical and Electronics Engineers, Inc.
Provided by IHS under license with IEEE
No reproduction or networking permitted without license from IHS
Not for Resale

Table 18—Thickness of jackets

Calculated diameter of cable under jacket (mm)	Jacket thickness minimum average (mm)
0–10.79	1.14[a]
10.80–17.78	1.52
17.79–38.10	2.03
38.11–63.50	2.79
63.51 and larger	3.56

[a]1.52 mm is optional for a heavy-duty jacket. Minimum point is 80% of minimum average wall.

Table 19—High-voltage ac test potentials; types E, S, X, T, T/N, LSE, LSX, and P cables

	Test potentials (V)					
	0–300 V	301–600/ 1000 V	1001– 2000 V		2001–5000 V	
					Nonshielded	
Conductor AWG or circular mil						
22–19	1.5	1.5	—		—	
18–15	1.5	1.5	—		—	
14–9	—	3.5	5.5		—	
8–2	—	5.5	7.0		13.0	
1–4/0	—	7.0	8.0		13.0	
250 000–525 000	—	8.0	9.5		13.0	
525 001 and larger	—	10.0	11.5		13.0	
Shielded cable, rated at	5000 V	8000 V	15 000 V	25 000 V	28 000 V	35 000V
8	13.0	—	—	—	—	—
6–2	13.0	18.0	27.0	—	—	—
1	13.0	18.0	27.0	38.0	42.0	—
1/0 and larger	13.0	18.0	27.0	38.0	42.0	49.0

Copyright © 2001 IEEE. All rights reserved.

Copyright The Institute of Electrical and Electronics Engineers, Inc.
Provided by IHS under license with IEEE
No reproduction or networking permitted without license from IHS
Not for Resale

Table 20—AC spark test voltage

Cable voltage rating		0–300 V	301–600/1000 V	1001/2000 V
Conductor AWG or kcmil	mm^2	AC spark test voltage (kV)		
22–20	0.32–0.52	1.75	—	—
19–16	0.53–1.31	1.75	7.5	—
15–10	1.32–5.26	1.75	7.5	10.0
9–8	5.27–8.38	—	10.0	12.5
7–2	8.39–31.3	—	10.0	12.5
1–4/0	1.4 –107.0	—	12.5	15.0
250–500	107.1– 254.0	—	15.0	17.5
501–1000	254.1–508.0	—	17.5	20.0
1001–2000	508.1–1015.0	—	20.0	22.5

Copyright © 2001 IEEE. All rights reserved.

Copyright The Institute of Electrical and Electronics Engineers, Inc.
Provided by IHS under license with IEEE
No reproduction or networking permitted without license from IHS
Not for Resale

Table 21—Temperature correction factor M [a] for adjusting insulation resistance to 15.6 °C

Temp (°C)	Resistivity coefficient *C* (see 5.17.4.2.6)										
	1.02	**1.04**	**1.06**	**1.08**	**1.10**	**1.12**	**1.14**	**1.16**	**1.18**	**1.20**	**1.22**
5.0	0.81	0.66	0.54	0.44	0.36	0.30	0.25	0.21	0.17	0.14	0.12
6.0	0.83	0.69	0.57	0.48	0.40	0.34	0.28	0.24	0.20	0.17	0.15
7.0	0.84	0.71	0.61	0.52	0.44	0.38	0.32	0.28	0.24	0.21	0.18
8.0	0.86	0.74	0.64	0.56	0.48	0.42	0.37	0.32	0.28	0.25	0.22
9.0	0.88	0.77	0.68	0.60	0.53	0.47	0.42	0.38	0.34	0.30	0.27
10.0	0.90	0.80	0.72	0.65	0.59	0.53	0.48	0.44	0.40	0.36	0.33
11.0	0.91	0.83	0.76	0.70	0.65	0.59	0.55	0.51	0.47	0.43	0.40
12.0	0.93	0.87	0.81	0.76	0.71	0.66	0.62	0.59	0.55	0.52	0.49
13.0	0.95	0.90	0.86	0.82	0.78	0.74	0.71	0.68	0.65	0.62	0.60
14.0	0.97	0.94	0.91	0.88	0.86	0.83	0.81	0.79	0.77	0.75	0.73
15.0	0.99	0.98	0.97	0.95	0.94	0.93	0.92	0.91	0.91	0.90	0.89
15.6	1.00	1.00	1.00	1.00	1.00	1.00	1.00	1.00	1.00	1.00	1.00
16.0	1.01	1.02	1.02	1.03	1.04	1.05	1.05	1.06	1.07	1.08	1.08
17.0	1.03	1.06	1.08	1.11	1.14	1.17	1.20	1.23	1.26	1.29	1.32
18.0	1.05	1.10	1.15	1.20	1.26	1.31	1.37	1.43	1.49	1.55	1.61
19.0	1.07	1.14	1.22	1.30	1.38	1.47	1.56	1.66	1.76	1.86	1.97
20.0	1.09	1.19	1.29	1.40	1.52	1.65	1.78	1.92	2.07	2.23	2.40
21.0	1.11	1.24	1.37	1.52	1.67	1.84	2.03	2.23	2.44	2.68	2.93
22.0	1.14	1.29	1.45	1.64	1.84	2.07	2.31	2.59	2.88	3.21	3.57
23.0	1.16	1.34	1.54	1.77	2.02	2.31	2.64	3.00	3.40	3.85	4.36
24.0	1.18	1.39	1.63	1.91	2.23	2.59	3.01	3.48	4.02	4.63	5.31
25.0	1.20	1.45	1.73	2.06	2.45	2.90	3.43	4.04	4.74	5.55	6.48
26.0	1.23	1.50	1.83	2.23	2.69	3.25	3.91	4.68	5.59	6.66	7.91
27.0	1.25	1.56	1.94	2.40	2.96	3.64	4.45	5.43	6.60	7.99	9.65
28.0	1.28	1.63	2.06	2.60	3.26	4.08	5.08	6.30	7.79	9.59	11.77
29.0	1.30	1.69	2.18	2.80	3.59	4.57	5.79	7.31	9.19	11.51	14.36
30.0	1.33	1.76	2.31	3.03	3.95	5.11	6.60	8.48	10.84	13.81	17.52
31.0	1.36	1.83	2.45	3.27	4.34	5.73	7.52	9.83	12.79	16.57	21.38
32.0	1.38	1.90	2.60	3.53	4.77	6.41	8.58	11.41	15.10	19.89	26.08
33.0	1.41	1.98	2.76	3.82	5.25	7.18	9.78	13.23	17.81	23.86	31.82
34.0	1.44	2.06	2.92	4.12	5.78	8.05	11.14	15.35	21.02	28.64	38.82
35.0	1.47	2.14	3.10	4.45	6.35	9.01	12.70	17.80	24.80	34.36	47.36

[a]Calculated from the formula $M = C^{(t-60)}$ in which C is determined as described in 5.17.4 and t is the temperature of the cable in F.

Copyright © 2001 IEEE. All rights reserved.

Copyright The Institute of Electrical and Electronics Engineers, Inc.
Provided by IHS under license with IEEE
No reproduction or networking permitted without license from IHS
Not for Resale

Table 22—Color code (NEMA WC 57 Table E-1)

Conductor number	Base color	Tracer color	Tracer color	Conductor number	Base color	Tracer color	Tracer color
1	Black			45	White	Black	Blue
2	White			46	Red	White	Blue
3	Red			47	Green	Orange	Red
4	Green			48	Orange	Red	Blue
5	Orange			49	Blue	Red	Orange
6	Blue			50	Black	Orange	Red
7	White	Black		51	White	Black	Orange
8	Red	Black		52	Red	Orange	Black
9	Green	Black		53	Green	Red	Blue
10	Orange	Black		54	Orange	Black	Blue
11	Blue	Black		55	Blue	Black	Orange
12	Black	White		56	Black	Orange	Green
13	Red	White		57	White	Orange	Green
14	Green	White		58	Red	Orange	Green
15	Blue	White		59	Green	Black	Blue
16	Black	Red		60	Orange	Green	Blue
17	White	Red		61	Blue	Green	Orange
18	Orange	Red		62	Black	Red	Blue
19	Blue	Red		63	White	Orange	Blue
20	Red	Green		64	Red	Black	Blue
21	Orange	Green		65	Green	Orange	Blue
22	Black	White	Red	66	Orange	White	Red
23	White	Black	Red	67	Blue	White	Red
24	Red	Black	White	68	Black	Green	Blue
25	Green	Black	White	69	White	Green	Blue
26	Orange	Black	White	70	Red	Green	Blue
27	Blue	Black	White	71	Green	White	Red
28	Black	Red	Green	72	Orange	Red	Black
29	White	Red	Green	73	Blue	Red	Black
30	Red	Black	Green	74	Black	Orange	Blue
31	Green	Black	Orange	75	Red	Orange	Blue
32	Orange	Black	Green	76	Green	Red	Black
33	Blue	White	Orange	77	Orange	White	Green
34	Black	White	Orange	78	Blue	White	Green
35	White	Red	Orange	79	Red	White	Orange
36	Orange	White	Blue	80	Green	White	Orange
37	White	Red	Blue	81	Blue	Black	Green
38	Black	White	Green	82	Orange	White	
39	White	Black	Green	83	Green	Red	
40	Red	White	Green	84	Black	Green	
41	Green	White	Blue	85	White	Green	
42	Orange	Red	Green	86	Blue	Green	
43	Blue	Red	Green	87	Black	Orange	
44	Black	White	Blue	88	White	Orange	

Copyright © 2001 IEEE. All rights reserved.

Copyright The Institute of Electrical and Electronics Engineers, Inc.
Provided by IHS under license with IEEE
No reproduction or networking permitted without license from IHS
Not for Resale

Table 22—Color code (NEMA WC 57 Table E-1) (continued)

Conductor number	Base color	Tracer color	Tracer color	Conductor number	Base color	Tracer color	Tracer color
89	Red	Orange		109	Blue	Yellow	
90	Green	Orange		110	Black	Yellow	Red
91	Blue	Orange		111	White	Yellow	Red
92	Black	Blue		112	Green	Yellow	Red
93	White	Blue		113	Orange	Yellow	Red
94	Red	Blue		114	Blue	Yellow	Red
95	Green	Blue		115	Black	Yellow	White
96	Orange	Blue		116	Red	Yellow	White
97	Yellow			117	Green	Yellow	White
98	Yellow	Black		118	Orange	Yellow	White
99	Yellow	White		119	Blue	Yellow	White
100	Yellow	Red		120	Black	Yellow	Green
101	Yellow	Green		121	White	Yellow	Green
102	Yellow	Orange		122	Red	Yellow	Green
103	Yellow	Blue		123	Orange	Yellow	Green
104	Black	Yellow		124	Blue	Yellow	Green
105	White	Yellow		125	Black	Yellow	Blue
106	Red	Yellow		126	White	Yellow	Blue
107	Green	Yellow		127	Red	Yellow	Blue
108	Orange	Yellow					

Table 23—Color code without white and green (NEMA WC 57 Table E-2)

Conductor number	Base color	Tracer color
1	Black	
2	Red	
3	Blue	
4	Orange	
5	Yellow	
6	Brown	
7	Red	Black
8	Blue	Black
9	Orange	Black
10	Yellow	Black
11	Black	Red
12	Blue	Red
13	Blue	Red
14	Orange	Red
15	Yellow	Red
16	Brown	Red
17	Black	Blue
18	Red	Blue
19	Orange	Blue
20	Yellow	Blue
21	Brown	Blue

Copyright © 2001 IEEE. All rights reserved.

Copyright The Institute of Electrical and Electronics Engineers, Inc.
Provided by IHS under license with IEEE
No reproduction or networking permitted without license from IHS
Not for Resale

Table 23—Color code without white and green (NEMA WC 57 Table E-2) (continued)

Conductor number	Base color	Tracer color
22	Black	Orange
23	Red	Orange
24	Blue	Orange
25	Yellow	Orange
26	Brown	Orange
27	Black	Yellow
28	Red	Yellow
29	Blue	Yellow
30	Orange	Yellow
31	Brown	Yellow
32	Black	Brown
33	Red	Brown
34	Blue	Brown
35	Orange	Brown
36	Yellow	Brown

NOTE—If an insulated conductor is functioning as a grounding conductor (normally not a current carrying conductor), then it shall be identified as green or green and yellow. The grounding conductor is not counted in the number of conductors in the cable and is designated as: X/C W Z INSULATED GROUNDS.

Where

X is the number of conductors excluding the insulated grounding conductor.

Z is the number of grounding conductors.

6. Cable application and installation

For cable application and installation guidelines refer to API RP14F or API RP14FZ, as applicable, for fixed and floating offshore platforms and IEEE Std 45 for shipboard. Other cables not listed in this document are provided in API RP14F, API RP14FZ, and IEEE Std 45.

--`,,`-`-`,,`,,`,`,,`---
Copyright © 2001 IEEE. All rights reserved.
Copyright The Institute of Electrical and Electronics Engineers, Inc.
Provided by IHS under license with IEEE
No reproduction or networking permitted without license from IHS
Not for Resale

Annex A

(informative)

Repeated flexing test equipment

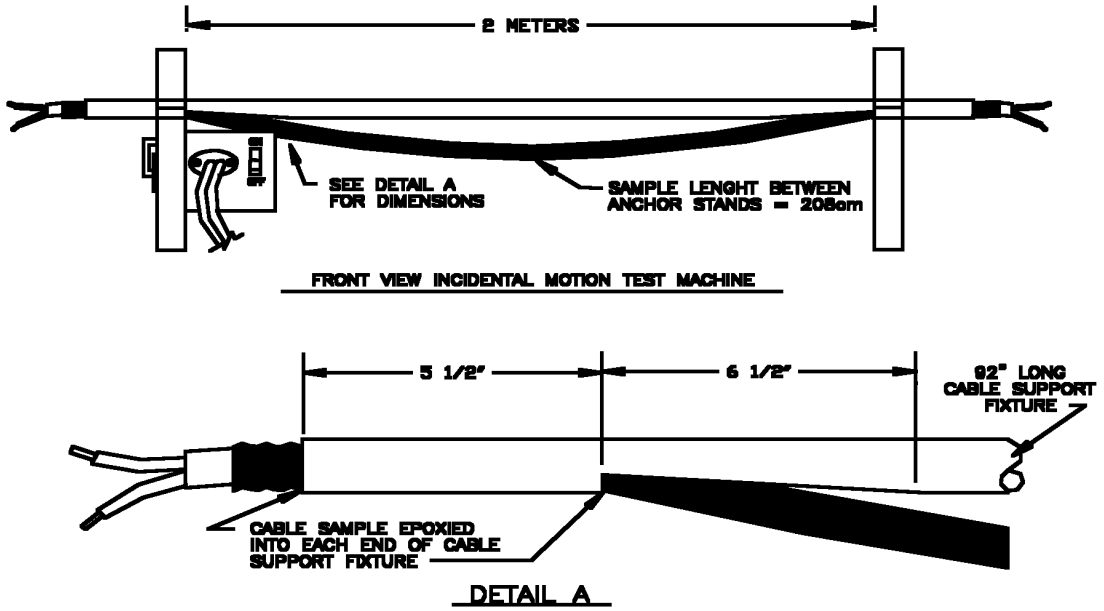

Figure A.1—Front view with cable support detail

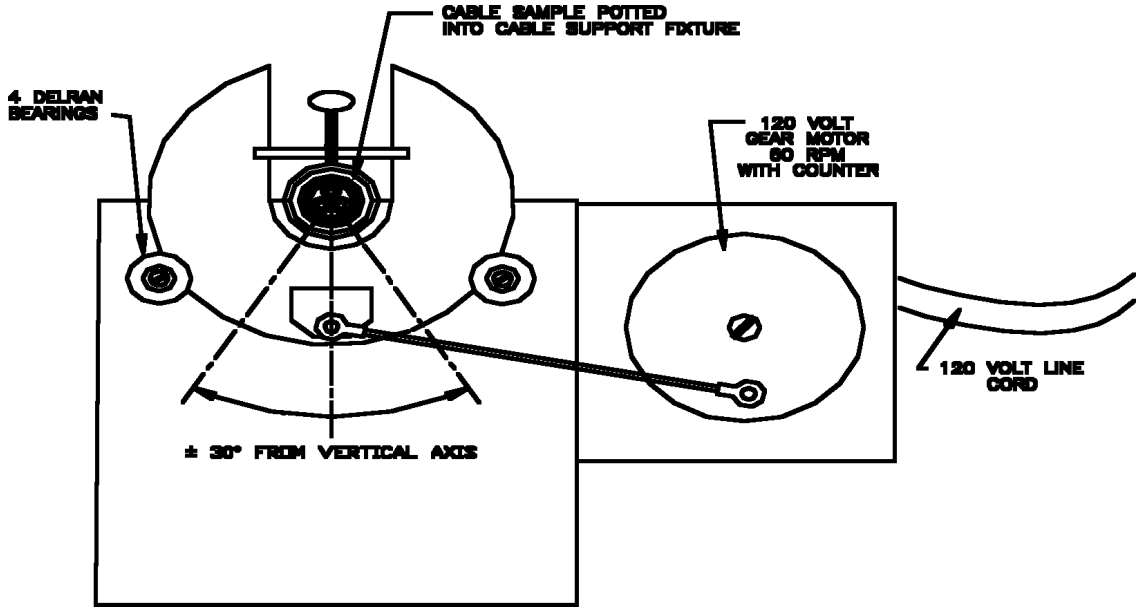

Figure A.2—Motion mechanism detail

Copyright © 2001 IEEE. All rights reserved.

Copyright The Institute of Electrical and Electronics Engineers, Inc.
Provided by IHS under license with IEEE
No reproduction or networking permitted without license from IHS
Not for Resale

Annex B

(informative)

Typical cable dimensions and weights

Table B.1—Typical dimensions and weights; single-, two-, three-, and four-conductor 600/1000 V; Type E, X, S, LSE, LSX, and T distribution cables

Number of conductors	AWG /kcmil	Unarmored		Armored		Armored and sheathed	
		Nom. dia. (in)	Approx. weight (lb/1000 ft)	Nom. dia. (in)	Approx. weight (lb/1000 ft)	Nom. dia. (in)	Approx. weight (lb/1000 ft)
1	14	0.22	32	0.28	45	0.38	77
1	12	0.24	42	0.30	55	0.40	89
1	10	0.27	58	0.33	74	0.43	111
1	8	0.33	87	0.39	105	0.49	147
1	6	0.36	121	0.42	142	0.52	187
1	4	0.41	177	0.47	201	0.60	268
1	2	0.47	261	0.53	288	0.66	363
1	1	0.57	348	0.63	379	0.75	459
1	1/0	0.61	423	0.67	456	0.79	540
1	2/0	0.66	519	0.72	554	0.88	678
1	3/0	0.71	635	0.77	672	0.93	803
1	4/0	0.77	781	0.83	821	0.99	962
1	250	0.88	954	0.94	999	1.11	1167
1	300	0.93	1122	0.99	1169	1.16	1345
1	350	0.98	1289	1.04	1339	1.21	1524
1	400	1.03	1453	1.09	1506	1.26	1698
1	500	1.11	1783	1.17	1839	1.34	2045
1	600	1.22	2136	1.28	2201	1.45	2425
1	750	1.33	2628	1.39	2699	1.56	2941
1	1000	1.48	3440	1.54	3518	1.77	3884
2	14	0.36	72	0.42	93	0.52	138
2	12	0.40	95	0.46	116	0.59	182
2	10	0.46	134	0.52	161	0.65	235
2	8	0.61	217	0.67	250	0.80	342
2	6	0.67	312	0.73	347	0.90	480
2	4	0.77	440	0.83	480	1.00	630
2	2	0.93	685	0.99	732	1.16	908
2	1	1.05	847	1.11	900	1.28	1095
2	1/0	1.13	1020	1.19	1076	1.36	1285

Copyright © 2001 IEEE. All rights reserved.

Copyright The Institute of Electrical and Electronics Engineers, Inc.
Provided by IHS under license with IEEE
No reproduction or networking permitted without license from IHS
Not for Resale

Table B.1—Typical dimensions and weights; single-, two-, three-, and four-conductor 600/1000 V; Type E, X, S, LSE, LSX, and T distribution cables (continued)

Number of conductors	AWG /kcmil	Unarmored		Armored		Armored and sheathed	
		Nom. dia. (in)	Approx. weight (lb/1000 ft)	Nom. dia. (in)	Approx. weight (lb/1000 ft)	Nom. dia. (in)	Approx. weight (lb/1000 ft)
2	2/0	1.23	1230	1.29	1295	1.46	1521
2	3/0	1.33	1489	1.39	1560	1.56	1802
2	4/0	1.45	1821	1.51	1897	1.75	2274
2	250	1.59	2157	1.65	2240	1.89	2650
2	300	1.76	2660	1.82	2754	2.05	3183
2	350	1.86	3031	1.92	3131	2.15	3583
2	400	1.96	3442	2.02	3548	2.25	4022
2	500	2.12	4193	2.18	4307	2.41	4816
2	600	2.34	5015	2.40	5142	2.63	5700
2	750	2.56	6106	2.62	6249	2.91	7022
3	14	0.38	93	0.44	114	0.57	177
3	12	0.42	123	0.48	147	0.61	215
3	10	0.49	176	0.55	203	0.68	280
3	8	0.65	290	0.71	323	0.88	453
3	6	0.72	409	0.78	446	0.94	578
3	4	0.82	591	0.88	634	1.05	793
3	2	0.99	903	1.05	953	1.22	1139
3	1	1.12	1138	1.18	1194	1.35	1401
3	1/0	1.21	1379	1.27	1444	1.44	1666
3	2/0	1.32	1693	1.38	1764	1.55	2004
3	3/0	1.43	2093	1.49	2169	1.65	2412
3	4/0	1.56	2553	1.62	2636	1.85	3020
3	250	1.77	3114	1.83	3208	2.06	3640
3	300	1.88	3666	1.94	3766	2.17	4222
3	350	1.99	4218	2.05	4324	2.28	4804
3	400	2.09	4776	2.15	4887	2.39	5412
3	500	2.27	5850	2.33	5973	2.56	6515
3	600	2.51	7015	2.57	7153	2.86	7912
3	750	2.81	8797	2.87	8953	3.16	9796
4	14	0.42	117	0.48	141	0.60	203
4	12	0.46	156	0.52	183	0.65	257
4	10	0.57	241	0.63	272	0.75	352
4	8	0.71	361	0.77	398	0.94	538
4	6	0.79	523	0.85	563	1.01	707
4	4	0.95	805	1.01	852	1.18	1032
4	2	1.09	1174	1.15	1230	1.32	1433
4	1	1.24	1485	1.30	1550	1.47	1777

Copyright © 2001 IEEE. All rights reserved.

Copyright The Institute of Electrical and Electronics Engineers, Inc.
Provided by IHS under license with IEEE
No reproduction or networking permitted without license from IHS
Not for Resale

Table B.1—Typical dimensions and weights; single-, two-, three-, and four-conductor 600/1000 V; Type E, X, S, LSE, LSX, and T distribution cables (continued)

Number of conductors	AWG /kcmil	Unarmored		Armored		Armored and sheathed	
		Nom. dia. (in)	Approx. weight (lb/1000 ft)	Nom. dia. (in)	Approx. weight (lb/1000 ft)	Nom. dia. (in)	Approx. weight (lb/1000 ft)
4	1/0	1.34	1814	1.40	1885	1.56	2113
4	2/0	1.46	2224	1.52	2302	1.75	2664
4	3/0	1.58	2719	1.64	2802	1.87	3192
4	4/0	1.79	3434	1.85	3528	2.08	3964
4	250	1.96	4058	2.02	4164	2.25	4638
4	350	2.20	5506	2.26	5622	2.49	6148
4	400	2.32	6242	2.38	6369	2.61	6922
4	500	2.51	7664	2.57	7802	2.87	8588
4	600	2.84	9357	2.90	9513	3.20	10 395
4	750	3.11	11 506	3.17	11 682	3.46	12 609

NOTE—Cables with Type T, S, LSE, and LSX insulated conductors will vary from those shown.

These values are for reference purposes only and should not be construed as requirements. Dimensions are based on the use of Class B conductors. Weights of armored constructions are based on aluminum braid armor. It is recommended that the user/specifier contact the manufacturer for manufacturer specific values.

Table B.2—Typical dimensions and weights; single-, two-, three-, and four-conductor 2000 V; Type E and X distribution cables

Number of conductors	AWG/ kcmil size	Unarmored		Armored		Armored and sheathed	
		Nom. dia. (in)	Approx. weight (lb/1000 ft)	Nom. dia. (in)	Approx. weight (lb/1000 ft)	Nom. dia. (in)	Approx. weight (lb/1000 ft)
1	14	0.25	37	0.31	50	0.41	85
1	12	0.27	48	0.33	64	0.43	101
1	10	0.30	63	0.36	79	0.46	119
1	8	0.35	91	0.41	109	0.51	153
1	6	0.38	127	0.44	148	0.57	211
1	4	0.43	183	0.49	207	0.62	276
1	2	0.49	268	0.55	295	0.68	372
1	1	0.59	356	0.65	387	0.77	469
1	1/0	0.63	432	0.69	465	0.81	552
1	2/0	0.68	527	0.74	562	0.90	688
1	3/0	0.73	645	0.79	682	0.95	816
1	4/0	0.79	792	0.85	832	1.01	976
1	250	0.90	966	0.96	1011	1.13	1182
1	300	0.95	1134	1.01	1181	1.18	1361
1	350	1.00	1302	1.06	1352	1.23	1540

Copyright © 2001 IEEE. All rights reserved.

Copyright The Institute of Electrical and Electronics Engineers, Inc.
Provided by IHS under license with IEEE
No reproduction or networking permitted without license from IHS
Not for Resale

Table B.2—Typical dimensions and weights; single-, two-, three-, and four-conductor 2000 V; Type E and X distribution cables (continued)

Number of conductors	AWG/ kcmil size	Unarmored		Armored		Armored and sheathed	
		Nom. dia. (in)	Approx. weight (lb/1000 ft)	Nom. dia. (in)	Approx. weight (lb/1000 ft)	Nom. dia. (in)	Approx. weight (lb/1000 ft)
1	400	1.05	1469	1.11	1522	1.28	1717
1	500	1.13	1798	1.19	1854	1.36	2063
1	600	1.24	2153	1.30	2218	1.47	2445
1	750	1.35	2646	1.41	2717	1.58	2962
1	1000	1.50	3460	1.56	3538	1.79	3910
2	14	0.42	82	0.48	106	0.61	174
2	12	0.46	108	0.52	135	0.65	209
2	10	0.55	162	0.61	191	0.74	276
2	8	0.65	229	0.71	262	0.88	392
2	6	0.71	326	0.77	363	0.94	503
2	4	0.81	453	0.87	496	1.04	652
2	2	0.97	702	1.03	752	1.20	935
2	1	1.09	864	1.15	920	1.32	1123
2	1/0	1.17	1041	1.23	1103	1.40	1318
2	2/0	1.27	1249	1.33	1317	1.50	1549
2	3/0	1.37	1512	1.43	1586	1.60	1834
2	4/0	1.49	1844	1.55	1922	1.79	2308
2	250	1.63	2182	1.69	2268	1.93	2687
2	300	1.80	2688	1.86	2782	2.09	3220
2	350	1.90	3062	1.96	3162	2.19	3622
2	400	2.00	3473	2.06	3579	2.29	4061
2	500	2.16	4227	2.22	4341	2.45	4859
2	600	2.38	5053	2.44	5167	2.67	5733
2	750	2.60	6146	2.66	6260	2.95	7044
3	12	0.49	141	0.55	168	0.68	245
3	10	0.59	211	0.65	242	0.77	324
3	8	0.69	303	0.75	338	0.92	475
3	4	0.91	648	0.97	695	1.14	868
3	2	1.04	933	1.10	986	1.27	1180
3	1	1.17	1168	1.23	1230	1.40	1445
3	1/0	1.25	1404	1.31	1469	1.48	1698
3	2/0	1.36	1714	1.42	1788	1.59	2035
3	4/0	1.60	2580	1.66	2663	1.89	3057
3	250	1.81	3146	1.87	3243	2.10	3683
3	300	1.92	3698	1.98	3801	2.21	4265
3	350	2.03	4252	2.09	4360	2.32	4849
3	400	2.14	4833	2.20	4947	2.43	5460

Copyright © 2001 IEEE. All rights reserved.

Copyright The Institute of Electrical and Electronics Engineers, Inc.
Provided by IHS under license with IEEE
No reproduction or networking permitted without license from IHS
Not for Resale

Table B.2—Typical dimensions and weights; single-, two-, three-, and four-conductor 2000 V; Type E and X distribution cables (continued)

Number of conductors	AWG/ kcmil size	Unarmored		Armored		Armored and sheathed	
		Nom. dia. (in)	Approx. weight (lb/1000 ft)	Nom. dia. (in)	Approx. weight (lb/1000 ft)	Nom. dia. (in)	Approx. weight (lb/1000 ft)
3	500	2.31	5890	2.37	6004	2.60	6555
3	600	2.55	7060	2.61	7174	2.90	7944
3	750	2.85	8847	2.91	8961	3.20	9815
4	14	0.49	131	0.55	158	0.67	228
4	10	0.64	261	0.70	294	0.83	390
4	8	0.76	381	0.82	421	0.99	569
4	4	1.00	831	1.06	881	1.22	1056
4	2	1.14	1205	1.20	1261	1.37	1472
4	1	1.29	1516	1.35	1584	1.52	1819
4	1/0	1.38	1840	1.44	1914	1.61	2164
4	2/0	1.51	2260	1.57	2340	1.80	2714
4	3/0	1.63	2762	1.69	2848	1.92	3248
4	4/0	1.83	3463	1.89	3560	2.13	4025
4	250	2.00	4091	2.06	4197	2.29	4679
4	300	2.12	4812	2.18	4926	2.42	5458
4	350	2.25	5562	2.31	5676	2.54	6214
4	400	2.37	6302	2.43	6416	2.66	6980
4	500	2.56	7729	2.62	7843	2.91	8616
4	600	2.89	9433	2.95	9547	3.24	10 412
4	750	3.16	11 587	3.22	11 701	3.51	12 642

NOTE—These values are for reference purposes only and should not be construed as requirements. Dimensions are based on the use of Class B conductors. Weights of armored constructions are based on aluminum braid armor. It is recommended that the user/specifier contact the manufacturer for manufacturer specific values.

Table B.3—Typical dimensions and weights; single-, two-, three-, and four-conductor 600/1000 V; Type T/N distribution cables

Number of conductors	AWG/ kcmil size	Unarmored		Armored		Armored and sheathed	
		Nom. dia. (in)	Approx. weight (lb/1000 ft)	Nom. dia. (in)	Approx. weight (lb/1000 ft)	Nom. dia. (in)	Approx. weight (lb/1000 ft)
1	14	0.21	31	0.27	44	0.37	74
1	12	0.23	41	0.29	54	0.39	87
1	10	0.26	58	0.32	74	0.42	110
1	8	0.32	90	0.38	108	0.48	149
1	6	0.34	123	0.40	141	0.50	184
1	4	0.42	188	0.48	212	0.61	280

Copyright © 2001 IEEE. All rights reserved.

Copyright The Institute of Electrical and Electronics Engineers, Inc.
Provided by IHS under license with IEEE
No reproduction or networking permitted without license from IHS
Not for Resale

Table B.3—Typical dimensions and weights; single-, two-, three-, and four-conductor 600/1000 V; Type T/N distribution cables (continued)

Number of conductors		Unarmored		Armored		Armored and sheathed	
	AWG/ kcmil size	Nom. dia. (in)	Approx. weight (lb/1000 ft)	Nom. dia. (in)	Approx. weight (lb/1000 ft)	Nom. dia. (in)	Approx. weight (lb/1000 ft)
1	1	0.58	364	0.64	395	0.76	476
1	1/0	0.63	440	0.69	473	0.81	560
1	2/0	0.67	536	0.73	571	0.89	696
1	3/0	0.73	653	0.79	690	0.95	824
1	4/0	0.79	801	0.85	841	1.01	985
1	250	0.89	977	0.95	1022	1.12	1192
1	300	0.96	1163	1.02	1213	1.19	1394
1	350	1.00	1315	1.06	1365	1.23	1553
1	400	1.05	1505	1.11	1558	1.28	1753
1	500	1.13	1811	1.19	1867	1.36	2076
1	600	1.24	2225	1.30	2290	1.47	2517
1	750	1.34	2686	1.40	2757	1.57	3001
1	1000	1.49	3530	1.55	3608	1.78	3978
2	14	0.34	68	0.40	86	0.50	129
2	12	0.38	94	0.44	115	0.57	178
2	10	0.44	134	0.50	158	0.63	228
2	8	0.59	223	0.65	254	0.78	343
2	6	0.63	316	0.69	349	0.82	444
2	4	0.79	463	0.85	503	1.02	656
2	2	0.95	711	1.01	758	1.18	938
2	1	1.07	881	1.13	937	1.30	1137
2	1/0	1.17	1058	1.23	1120	1.40	1335
2	2/0	1.25	1266	1.31	1331	1.48	1560
2	3/0	1.37	1529	1.43	1603	1.60	1851
2	4/0	1.49	1863	1.55	1941	1.79	2327
2	250	1.61	2203	1.67	2289	1.91	2703
2	300	1.82	2748	1.88	2845	2.11	3287
2	350	1.90	3088	1.96	3188	2.19	3648
2	400	2.00	3548	2.06	3654	2.29	4136
2	500	2.16	4254	2.22	4368	2.45	4886
2	600	2.38	5201	2.44	5331	2.67	5897
2	750	2.58	6226	2.64	6369	2.93	7147
3	12	0.40	122	0.46	143	0.59	209
3	10	0.47	177	0.53	204	0.65	272
3	8	0.63	300	0.69	333	0.81	420
3	6	0.67	411	0.73	446	0.90	579
3	4	0.89	664	0.95	709	1.11	868

Copyright © 2001 IEEE. All rights reserved.

Copyright The Institute of Electrical and Electronics Engineers, Inc.
Provided by IHS under license with IEEE
No reproduction or networking permitted without license from IHS
Not for Resale

Table B.3—Typical dimensions and weights; single-, two-, three-, and four-conductor 600/1000 V; Type T/N distribution cables (continued)

Number of conductors		Unarmored		Armored		Armored and sheathed	
	AWG/ kcmil size	Nom. dia. (in)	Approx. weight (lb/1000 ft)	Nom. dia. (in)	Approx. weight (lb/1000 ft)	Nom. dia. (in)	Approx. weight (lb/1000 ft)
3	2	1.02	949	1.08	1002	1.24	1181
3	1	1.15	1197	1.21	1256	1.37	1454
3	1/0	1.25	1429	1.31	1494	1.48	1723
3	2/0	1.34	1743	1.40	1814	1.57	2058
3	3/0	1.47	2145	1.53	2223	1.76	2587
3	4/0	1.60	2608	1.66	2691	1.89	3085
3	250	1.79	3181	1.85	3275	2.08	3711
3	300	1.94	3783	2.00	3886	2.23	4355
3	350	2.03	4292	2.09	4400	2.32	4889
3	400	2.14	4944	2.20	5058	2.43	5571
3	500	2.31	5930	2.37	6057	2.60	6608
3	600	2.55	7283	2.61	7421	2.90	8191
3	750	2.83	8972	2.89	9128	3.18	9976
4	14	0.39	108	0.45	129	0.58	193
4	12	0.44	155	0.50	179	0.63	249
4	10	0.51	223	0.57	252	0.70	332
4	8	0.69	377	0.75	412	0.92	549
4	6	0.74	532	0.80	569	0.97	714
4	4	0.97	846	1.03	896	1.20	1079
4	2	1.12	1230	1.18	1286	1.35	1493
4	1	1.26	1546	1.32	1614	1.49	1844
4	1/0	1.38	1873	1.44	1947	1.61	2197
4	2/0	1.48	2288	1.54	2366	1.77	2732
4	3/0	1.63	2795	1.69	2881	1.92	3281
4	4/0	1.83	3500	1.89	3597	2.13	4062
4	250	1.98	4142	2.04	4248	2.27	4726
4	300	2.15	4942	2.21	5056	2.44	5572
4	350	2.25	5616	2.31	5735	2.54	6273
4	400	2.37	6450	2.43	6580	2.66	7144
4	500	2.56	7782	2.62	7925	2.91	8698
4	600	2.89	9730	2.95	9889	3.24	10 754
4	750	3.13	11 731	3.19	11 907	3.49	2873

NOTE—These values are for reference purposes only and should not be construed as requirements. Dimensions are based on the use of Class B conductors. Weights of armored constructions are based on aluminum braid armor. It is recommended that the user/specifier contact the manufacturer for manufacturer specific values.

Copyright © 2001 IEEE. All rights reserved.

Copyright The Institute of Electrical and Electronics Engineers, Inc.
Provided by IHS under license with IEEE
No reproduction or networking permitted without license from IHS
Not for Resale

Table B.4—Typical dimensions and weights; single conductor 2000 V; Type P distribution cables

Conductor size in AWG or kcmil	Unarmored		Armored		Armored and sheathed	
	Nom. dia. (in)	Approx. weight (lb/1000 ft)	Nom. dia. (in)	Approx. weight (lb/1000 ft)	Nom. dia. (in)	Approx. weight (lb/1000 ft)
18	0.143	16	0.193	29	0.324	38
16	0.153	18	0.203	32	0.334	42
14	0.168	25	0.218	45	0.349	60
12	0.187	32	0.237	58	0.368	80
10	0.207	51	0.257	93	0.388	127
8	0.255	71	0.305	116	0.436	159
6	0.295	108	0.345	155	0.476	204
4	0.377	173	0.427	230	0.558	296
2	0.443	242	0.493	303	0.624	366
1	0.484	335	0.534	406	0.665	468
1/0	0.548	420	0.598	494	0.729	571
2/0	0.615	494	0.665	579	0.796	662
3/0	0.663	734	0.713	776	0.886	900
4/0	0.729	820	0.779	889	0.952	1036
262 kcmil	0.888	945	0.938	1147	1.111	1295
313 kcmil	0.954	1113	1.004	1332	1.177	1491
373 kcmil	1.018	1419	1.068	1576	1.241	1741
444 kcmil	1.094	1578	1.144	1816	1.317	1992
535 kcmil	1.212	1976	1.262	2246	1.435	2425
646 kcmil	1.300	2348	1.350	2559	1.523	2757
777 kcmil	1.395	2795	1.445	3013	1.618	3205
1111kcmil	1.652	3982	1.702	4129	1.938	4484

NOTE—These values are for reference purposes only and should not be construed as requirements. Weights of armored constructions are based on bronze braid armor. It is recommended that the user/specifier contact the manufacturer for manufacturer specific values.

Copyright © 2001 IEEE. All rights reserved.

Copyright The Institute of Electrical and Electronics Engineers, Inc.
Provided by IHS under license with IEEE
No reproduction or networking permitted without license from IHS
Not for Resale

Table B.5—Typical dimensions and weights; two-, three-, four-, and five-conductor 600/1000 V; Type P distribution cable

Number of conductors	Conductor size in AWG or kcmil	Unarmored		Armored		Armored and sheathed	
		Nom. dia. (in)	Approx. weight (lb/1000 ft)	Nom. dia. (in)	Approx. weight (lb/1000 ft)	Nom. dia. (in)	Approx. weight (lb/1000 ft)
2	16	0.373	75	0.423	141	0.554	202
2	14	0.403	95	0.453	165	0.584	230
2	12	0.441	117	0.491	194	0.622	263
2	10	0.481	148	0.531	233	0.662	307
2	8	0.600	221	0.650	327	0.781	416
2	6	0.680	308	0.730	424	0.903	559
2	4	0.887	516	0.937	664	1.110	835
2	1/0	1.224	1128	1.274	1334	1.447	1562
2	4/0	1.562	2003	1.612	2271	1.848	2680
3	16	0.392	66	0.442	128	0.573	182
3	14	0.424	102	0.474	176	0.605	236
3	12	0.465	133	0.515	212	0.646	276
3	10	0.508	189	0.558	281	0.689	352
3	8	0.637	274	0.687	385	0.818	477
3	6	0.723	390	0.773	519	0.946	650
3	4	0.942	678	0.992	843	1.165	1004
3	2	1.084	887	1.134	967	1.307	1194
3	1	1.208	1284	1.258	1458	1.431	1675
3	1/0	1.306	1448	1.356	1781	1.529	2015
3	2/0	1.422	1945	1.472	2082	1.645	2424
3	3/0	1.528	2379	1.578	2720	1.814	3106
3	4/0	1.670	2864	1.720	3233	1.956	3652
3	262	1.949	3452	1.999	3880	2.235	4434
3	313	2.092	4023	2.142	4434	2.378	4919
3	373	2.231	4772	2.281	5219	2.517	5718
3	444	2.394	5670	2.444	6176	2.680	6864
3	535	2.637	6784	2.687	7492	2.986	8250
3	646	2.890	7961	2.940	8414	3.239	9258
3	777	3.111	9573	3.161	10 065	3.460	10 945
4	16	0.423	99	0.473	154	0.604	227
4	14	0.459	128	0.509	213	0.640	275
4	12	0.505	168	0.555	256	0.686	323
4	10	0.553	243	0.603	313	0.734	390
4	8	0.698	355	0.748	466	0.921	591
4	6	0.794	533	0.844	669	1.017	808
4	4	1.035	879	1.085	1062	1.258	1236
4	2	1.194	1120	1.244	1345	1.417	1677

Copyright © 2001 IEEE. All rights reserved.

Copyright The Institute of Electrical and Electronics Engineers, Inc.
Provided by IHS under license with IEEE
No reproduction or networking permitted without license from IHS
Not for Resale

Table B.5—Typical dimensions and weights; two-, three-, four-, and five-conductor 600/1000 V; Type P distribution cable (continued)

Number of conductors	Conductor size in AWG or kcmil	Unarmored		Armored		Armored and sheathed	
		Nom. dia. (in)	Approx. weight (lb/1000 ft)	Nom. dia. (in)	Approx. weight (lb/1000 ft)	Nom. dia. (in)	Approx. weight (lb/1000 ft)
4	1	1.332	1602	1.382	1909	1.555	2144
4	1/0	1.442	1907	1.492	2180	1.665	2434
4	2/0	1.573	2535	1.623	2665	.859	3050
4	3/0	1.754	3206	1.804	3578	2.040	4003
4	4/0	1.913	3765	1.963	4214	2.199	4670
4	262	2.155	4625	2.205	4795	2.441	5610
4	313	2.315	5367	2.365	5868	2.601	6395
4	373	2.471	6462	2.521	6853	2.820	7576
4	444	2.653	7560	2.703	7987	3.002	8760
4	535	2.989	9284	3.039	9762	3.338	105 70
4	646	3.201	10 571	3.251	10 946	3.550	11 840
5	18	0.431	100	0.481	171	0.612	221
5	16	0.458	110	0.508	189	0.639	264
5	14	0.498	149	0.548	234	0.679	301
5	12	0.550	196	0.600	266	0.731	334
5	10	0.604	296	0.654	406	0.785	494
5	8	0.765	453	0.815	569	0.988	704
5	6	0.914	653	0.964	813	1.137	973
5	4	1.137	1073	1.187	1292	1.360	1481
5	2	1.315	1361	1.365	1637	1.538	1856
5	1	1.470	2130	1.520	2192	1.756	2482
5	1/0	1.593	2550	1.643	2746	1.879	3108
5	2/0	1.802	2954	1.852	3301	2.088	3734
5	4/0	2.112	3615	2.162	3955	2.398	4592

NOTE—These values are for reference purposes only and should not be construed as requirements. Weights of armored constructions are based on bronze braid armor. It is recommended that the user/specifier contact the manufacturer for manufacturer specific values.

Copyright © 2001 IEEE. All rights reserved.

Copyright The Institute of Electrical and Electronics Engineers, Inc.
Provided by IHS under license with IEEE
No reproduction or networking permitted without license from IHS
Not for Resale

Table B.6—Typical dimensions and weights; three-conductor 5000 V; Type E and X distribution cables

AWG/ kcmil size	Unarmored		Armored		Armored and sheathed	
	Nom. dia. (in)	Approx. weight (lb/1000 ft)	Nom. dia. (in)	Approx. weight (lb/1000 ft)	Nom. dia. (in)	Approx. weight (lb/1000 ft)
8	1.14	783	1.20	839	1.37	1050
6	1.21	934	1.27	999	1.44	1221
4	1.33	1163	1.39	1234	1.56	1476
2	1.46	1541	1.52	1619	1.75	1981
1	1.56	1760	1.62	1843	1.85	2227
1/0	1.63	2035	1.69	2121	1.92	2521
2/0	1.79	2498	1.85	2592	2.08	3028
3/0	1.91	2946	1.97	3049	2.20	3511
4/0	2.03	3476	2.09	3584	2.32	4073
250 kcmil	2.13	4006	2.19	4120	2.42	4631
300 kcmil	2.25	4611	2.31	4725	2.54	5263
350 kcmil	2.36	5210	2.42	5324	2.65	5886
400 kcmil	2.46	5767	2.52	5881	2.82	6653
500 kcmil	2.69	7008	2.75	7122	3.04	7932
600 kcmil	2.92	8331	2.98	8445	3.28	9350
750 kcmil	3.15	9068	3.21	9182	3.51	10 153

NOTE—These values are for reference purposes only and should not be construed as requirements. Dimensions are based on the use of Class B conductors. Weights of armored constructions are based on aluminum braid armor. It is recommended that the user/specifier contact the manufacturer for manufacturer specific values.

Table B.7—Typical Dimensions and weights; one conductor 5000 V; Type E and X distribution cables

AWG/ kcmil size	Unarmored		Armored		Armored and sheathed	
	Nom. dia. (in)	Approx. weight (lb/1000 ft)	Nom. dia. (in)	Approx. weight (lb/1000 ft)	Nom. dia. (in)	Approx. weight (lb/1000 ft)
8	0.58	234	0.64	265	0.76	346
6	0.61	279	0.67	312	0.79	396
4	0.66	345	0.72	380	0.89	512
2	0.72	453	0.78	490	0.95	632
1	0.77	525	0.83	565	1.00	715
1/0	0.80	608	0.86	648	1.03	802
2/0	0.89	755	0.95	800	1.12	970
3/0	0.94	883	1.00	930	1.17	1107

Copyright © 2001 IEEE. All rights reserved.

Copyright The Institute of Electrical and Electronics Engineers, Inc.
Provided by IHS under license with IEEE
No reproduction or networking permitted without license from IHS
Not for Resale

Table B.7—Typical Dimensions and weights; one conductor 5000 V; Type E and X distribution cables (continued)

AWG/ kcmil size	Unarmored		Armored		Armored and sheathed	
	Nom. dia. (in)	Approx. weight (lb/1000 ft)	Nom. dia. (in)	Approx. weight (lb/1000 ft)	Nom. dia. (in)	Approx. weight (lb/1000 ft)
4/0	1.00	1050	1.06	1100	1.23	1288
250 kcmil	1.04	1192	1.10	1245	1.27	1439
300 kcmil	1.10	1376	1.16	1432	1.33	1636
350 kcmil	1.15	1557	1.21	1616	1.38	1828
400 kcmil	1.20	1740	1.26	1802	1.43	2023
500 kcmil	1.30	2111	1.36	2179	1.53	2416
600 kcmil	1.38	2462	1.44	2536	1.61	2786
750 kcmil	1.49	2669	1.55	2747	1.78	3117
1000 kcmil	1.64	3835	1.70	3921	1.93	4323

NOTE—These values are for reference purposes only and should not be construed as requirements. Dimensions are based on the use of Class B conductors. Weights of armored constructions are based on aluminum braid armor. It is recommended that the user/specifier contact the manufacturer for manufacturer specific values.

Table B.8—Typical dimensions and weights; multiconductor control 600/1000 V; type T, E, X, S, LSE, and LSX cables

Number of conductors	Conductor AWG size	Unarmored		Armored		Armored and sheathed	
		Nom. dia. (in)	Approx. weight (lb/1000 ft)	Nom. dia. (in)	Approx. weight (lb/1000 ft)	Nom. dia. (in)	Approx. weight (lb/1000 ft)
2	18	0.32	43	0.38	61	0.48	102
3	18	0.34	53	0.40	71	0.49	110
4	18	0.37	65	0.43	86	0.55	143
7	18	0.43	94	0.49	118	0.62	187
10	18	0.57	145	0.63	176	0.76	263
14	18	0.62	187	0.68	220	0.80	306
16	18	0.65	206	0.71	239	0.88	369
19	18	0.68	233	0.74	268	0.91	403
24	18	0.79	288	0.85	328	1.02	481
30	18	0.88	380	0.94	425	1.11	593
37	18	0.94	444	1.00	491	1.17	668
40	18	1.01	483	1.07	536	1.24	725
61	18	1.16	678	1.22	740	1.39	954
2	16	0.34	50	0.40	68	0.50	111
3	16	0.36	64	0.42	85	0.51	125
4	16	0.39	77	0.45	98	0.58	162
7	16	0.46	119	0.52	146	0.65	220

Copyright © 2001 IEEE. All rights reserved.

Copyright The Institute of Electrical and Electronics Engineers, Inc.
Provided by IHS under license with IEEE
No reproduction or networking permitted without license from IHS
Not for Resale

Table B.8—Typical dimensions and weights; multiconductor control 600/1000 V; type T, E, X, S, LSE, and LSX cables (continued)

Number of conductors	Conductor AWG size	Unarmored		Armored		Armored and sheathed	
		Nom. dia. (in)	Approx. weight (lb/1000 ft)	Nom. dia. (in)	Approx. weight (lb/1000 ft)	Nom. dia. (in)	Approx. weight (lb/1000 ft)
10	16	0.61	181	0.67	214	0.80	306
14	16	0.66	233	0.72	268	0.89	400
16	16	0.70	263	0.76	298	0.93	437
19	16	0.73	309	0.79	346	0.96	490
24	16	0.89	404	0.95	449	1.12	619
30	16	0.94	480	1.00	527	1.17	704
37	16	1.01	570	1.07	623	1.24	812
40	16	1.09	623	1.15	679	1.32	882
61	16	1.25	881	1.31	946	1.48	1175
7	14	0.49	164	0.55	191	0.68	268
10	14	0.65	248	0.71	281	0.88	411
14	14	0.71	329	0.77	366	0.93	497
16	14	0.74	363	0.80	400	0.97	545
19	14	0.78	439	0.84	479	1.01	630
37	14	1.08	810	1.14	866	1.31	1067
40	14	1.16	876	1.22	938	1.39	1152
61	14	1.34	1272	1.40	1343	1.57	1587

NOTE—Weights and diameters given are for cables with Type E and X insulated conductors. Cables with Type T, S, LSE, and LSX insulated conductors will vary from those shown.

These values are for reference purposes only and should not be construed as requirements. Dimensions are based on the use of Class B conductors. Weights of armored constructions are based on aluminum braid armor. It is recommended that the user/specifier contact the manufacturer for manufacturer values.

--`,,`-`-`,,`,,`,`,,`---
Copyright © 2001 IEEE. All rights reserved.
Copyright The Institute of Electrical and Electronics Engineers, Inc.
Provided by IHS under license with IEEE
No reproduction or networking permitted without license from IHS
Not for Resale

Table B.9—Typical dimensions and weights; multiconductor control 600/1000 V; Type T/N cables

Number of conductors	Conductor AWG size	Unarmored		Armored		Armored and sheathed	
		Nom. dia. (in)	Approx. weight (lb/1000 ft)	Nom. dia. (in)	Approx. weight (lb/1000 ft)	Nom. dia. (in)	Approx. weight (lb/1000 ft)
2	18	0.28	38	0.34	54	0.44	92
3	18	0.29	47	0.35	63	0.45	102
4	18	0.32	59	0.38	77	0.47	114
7	18	0.37	88	0.43	109	0.56	171
19	18	0.58	221	0.64	252	0.77	340
24	18	0.67	273	0.73	308	0.90	441
30	18	0.71	329	0.77	366	0.94	506
37	18	0.76	391	0.82	431	0.99	579
40	18	0.82	427	0.88	470	1.04	618
61	18	0.98	648	1.04	698	1.21	883
2	16	0.32	49	0.38	67	0.48	108
3	16	0.34	62	0.40	80	0.49	119
4	16	0.37	77	0.43	98	0.55	155
7	16	0.43	116	0.49	140	0.62	209
10	16	0.57	176	0.63	207	0.76	294
14	16	0.62	230	0.68	263	0.80	349
16	16	0.65	255	0.71	288	0.88	418
19	16	0.68	303	0.74	338	0.91	473
24	16	0.79	362	0.85	402	1.02	555
30	16	0.88	473	0.94	518	1.11	686
37	16	0.94	558	1.00	605	1.17	782
40	16	1.01	606	1.07	659	1.24	848
61	16	1.16	866	1.22	928	1.39	1142
7	14	0.46	155	0.52	182	0.65	256
10	14	0.61	232	0.67	265	0.80	357
14	14	0.66	305	0.72	340	0.89	472
16	14	0.70	345	0.76	380	0.93	519
19	14	0.73	412	0.79	449	0.96	593
24	14	0.89	527	0.95	572	1.12	742
30	14	0.94	635	1.00	682	1.17	859
37	14	1.01	761	1.07	814	1.24	1003
40	14	1.09	829	1.15	885	1.32	1088
61	14	1.25	1195	1.31	1260	1.48	1489

NOTE—These values are for reference purposes only and should not be construed as requirements. Dimensions are based on the use of Class B conductors. Weights of armored constructions are based on aluminum braid armor. It is recommended that the user/specifier contact the manufacturer for manufacturer specific values.

Copyright © 2001 IEEE. All rights reserved.

Copyright The Institute of Electrical and Electronics Engineers, Inc.
Provided by IHS under license with IEEE
No reproduction or networking permitted without license from IHS
Not for Resale

Table B.10—Typical dimensions and weights; multiconductor control 600/1000 V; Type P cables

Number of conductors	Conductor size AWG	Unarmored		Armored		Armored and sheathed	
		Nom. dia. (in)	Approx. weight (lb/1000 ft)	Nom. dia. (in)	Approx. weight (lb/1000 ft)	Nom. dia. (in)	Approx. weight (lb/1000 ft)
4	16	0.423	99	0.473	154	0.604	227
5	16	0.458	110	0.508	171	0.639	264
7	16	0.494	155	0.544	265	0.675	300
8	16	0.531	164	0.581	255	0.712	330
10	16	0.615	206	0.665	366	0.796	445
16	16	0.700	299	0.750	465	0.923	602
20	16	0.773	360	0.823	560	0.996	724
24	16	0.899	462	0.949	718	1.122	809
37	16	1.020	658	1.070	819	1.243	989
44	16	1.096	807	1.146	980	1.319	1175
60	16	1.262	1053	1.312	1256	1.485	1496
91	16	1.504	1595	1.554	1896	1.790	2181
4	14	0.459	128	0.509	213	0.640	275
5	14	0.498	149	0.548	234	0.679	301
6	14	0.539	182	0.589	264	0.720	335
7	14	0.539	205	0.589	297	0.720	377
10	14	0.675	280	0.725	406	0.898	515
12	14	0.696	307	0.746	428	0.919	558
14	14	0.731	415	0.781	540	1.117	876
24	14	0.989	615	1.039	892	1.212	1132
30	14	1.045	780	1.095	965	1.268	1180
37	14	1.125	876	1.175	1135	1.348	1405
44	14	1.210	1087	1.260	1260	1.433	1477
91	14	1.669	2200	1.719	2465	1.955	2855
4	12	0.505	168	0.555	256	0.686	323
5	12	0.550	196	0.600	266	0.731	334
6	12	0.596	280	0.646	405	0.777	500
10	12	0.751	369	0.801	500	0.974	629
20	12	0.995	701	1.045	890	1.218	1055
24	12	1.103	861	1.153	1167	1.326	1468
37	12	1.258	1262	1.308	1467	1.481	1677

NOTE—These values are for reference purposes only and should not be construed as requirements. Weights of armored constructions are based on bronze braid armor. It is recommended that the user/specifier contact the manufacturer for manufacturer specific values.

--`,,`-`-`,,`,,`,`,,`---
Copyright © 2001 IEEE. All rights reserved.
Copyright The Institute of Electrical and Electronics Engineers, Inc.
Provided by IHS under license with IEEE
No reproduction or networking permitted without license from IHS
Not for Resale

Table B.11—Typical dimensions and weights; twisted-pair signal cable 300 V; Type T unshielded pairs

Number of pairs	AWG size	Unarmored		Armored		Armored and sheathed	
		Nom. dia. (in)	Approx. weight (lb/1000 ft)	Nom. dia. (in)	Approx. weight (lb/1000 ft)	Nom. dia. (in)	Approx. weight (lb/1000 ft)
1	20	0.28	35	0.34	51	0.44	88
2	20	0.39	58	0.45	79	0.57	139
3	20	0.44	76	0.50	100	0.62	165
4	20	0.48	92	0.54	119	0.66	189
5	20	0.56	127	0.62	158	0.75	241
6	20	0.58	142	0.64	173	0.77	260
8	20	0.64	174	0.70	207	0.82	298
10	20	0.72	210	0.78	247	0.95	391
15	20	0.80	283	0.86	323	1.03	480
20	20	0.91	392	0.97	439	1.14	610
25	20	1.04	477	1.10	530	1.27	726
30	20	1.09	550	1.15	606	1.32	806
40	20	1.22	698	1.28	763	1.45	989
50	20	1.34	845	1.40	916	1.56	1151
60	20	1.52	1002	1.58	1082	1.81	1465
1	18	0.30	43	0.36	59	0.46	98
2	18	0.42	74	0.48	98	0.61	166
3	18	0.48	98	0.54	125	0.66	196
4	18	0.55	138	0.61	167	0.74	250
5	18	0.61	165	0.67	198	0.80	289
6	18	0.63	186	0.69	219	0.82	312
8	18	0.69	232	0.75	267	0.92	402
10	18	0.78	281	0.84	321	1.01	471
15	18	0.91	424	0.97	471	1.14	640
20	18	0.99	533	1.05	583	1.22	765
25	18	1.13	652	1.19	708	1.36	912
30	18	1.19	758	1.25	820	1.42	1034
40	18	1.33	972	1.39	1043	1.56	1279
50	18	1.46	1185	1.52	1263	1.76	1637
60	18	1.66	1409	1.72	1498	1.96	1917
1	16	0.32	51	0.38	69	0.48	110
2	16	0.45	90	0.51	114	0.64	185
3	16	0.51	121	0.57	150	0.70	227
4	16	0.59	169	0.65	200	0.78	287
5	16	0.66	202	0.72	237	0.89	369

Copyright © 2001 IEEE. All rights reserved.

Copyright The Institute of Electrical and Electronics Engineers, Inc.
Provided by IHS under license with IEEE
No reproduction or networking permitted without license from IHS
Not for Resale

Table B.11—Typical dimensions and weights; twisted-pair signal cable 300 V; Type T unshielded pairs (continued)

Number of pairs	AWG size	Unarmored		Armored		Armored and sheathed	
		Nom. dia. (in)	Approx. weight (lb/1000 ft)	Nom. dia. (in)	Approx. weight (lb/1000 ft)	Nom. dia. (in)	Approx. weight (lb/1000 ft)
6	16	0.68	231	0.74	266	0.91	400
8	16	0.75	290	0.81	327	0.98	475
10	16	0.89	388	0.95	433	1.12	604
15	16	0.99	532	1.05	582	1.22	770
25	16	1.23	827	1.29	892	1.46	1117
30	16	1.30	966	1.36	1034	1.52	1261
40	16	1.45	1246	1.51	1322	1.74	1682
50	16	1.59	1524	1.65	1607	1.88	1994
60	16	1.88	1928	1.94	2028	2.17	2491

NOTE—These values are for reference purposes only and should not be construed as requirements. Dimensions are based on the use of Class B conductors. Weights of armored constructions are based on aluminum braid armor. It is recommended that the user/specifier contact the manufacturer for manufacturer specific values.

Table B.12—Typical dimensions and weights; twisted-pair signal cable, 300 V; Type T cables, shielded pairs

Number of pairs	AWG size	Unarmored		Armored		Armored and sheathed	
		Nom. dia. (in)	Approx. weight (lb/1000 ft)	Nom. dia. (in)	Approx. weight (lb/1000 ft)	Nom. dia. (in)	Approx. weight (lb/1000 ft)
1	20	0.28	36	0.34	52	0.44	90
2	20	0.44	64	0.50	88	0.63	159
3	20	0.47	80	0.53	107	0.65	175
4	20	0.51	97	0.57	126	0.70	206
5	20	0.59	132	0.65	163	0.78	253
6	20	0.64	152	0.70	185	0.87	314
8	20	0.69	185	0.75	220	0.92	357
10	20	0.81	226	0.87	269	1.04	425
15	20	0.97	346	1.03	396	1.20	579
20	20	1.08	429	1.14	485	1.30	673
25	20	1.22	519	1.28	584	1.45	808
30	20	1.26	592	1.32	660	1.49	890
40	20	1.42	750	1.48	826	1.64	1067
50	20	1.60	913	1.66	996	1.89	1390
60	20	1.77	1167	1.83	1261	2.06	1692
1	18	0.30	46	0.36	62	0.46	102
2	18	0.48	85	0.54	112	0.66	181

--`,,`-`-`,,`,,`,`,,`---
Copyright © 2001 IEEE. All rights reserved.
Copyright The Institute of Electrical and Electronics Engineers, Inc.
Provided by IHS under license with IEEE
No reproduction or networking permitted without license from IHS
Not for Resale

Table B.12—Typical dimensions and weights; twisted-pair signal cable, 300 V; Type T cables, shielded pairs (continued)

Number of pairs	AWG size	Unarmored		Armored		Armored and sheathed	
		Nom. dia. (in)	Approx. weight (lb/1000 ft)	Nom. dia. (in)	Approx. weight (lb/1000 ft)	Nom. dia. (in)	Approx. weight (lb/1000 ft)
3	18	0.51	109	0.57	138	0.69	211
4	18	0.59	153	0.65	184	0.77	266
5	18	0.64	182	0.70	215	0.87	344
6	18	0.70	211	0.76	246	0.93	384
8	18	0.76	262	0.82	302	0.98	441
10	18	0.93	359	0.99	406	1.16	582
15	18	1.06	490	1.12	546	1.29	743
20	18	1.17	619	1.23	681	1.40	896
25	18	1.33	755	1.39	826	1.56	1068
30	18	1.38	872	1.44	946	1.61	1196
40	18	1.55	1119	1.61	1199	1.84	1581
50	18	1.82	1481	0.88	1578	2.11	2020
60	18	1.93	1726	1.99	1829	2.22	2296
1	16	0.32	56	0.38	74	0.48	115
2	16	0.51	104	0.57	133	0.70	213
3	16	0.58	153	0.64	184	0.76	265
4	16	0.63	190	0.69	223	0.82	318
5	16	0.69	227	0.75	262	0.92	399
6	16	0.75	265	0.81	302	0.98	449
8	16	0.82	332	0.88	375	1.04	523
10	16	1.00	449	1.06	499	1.23	687
15	16	1.15	621	1.21	680	1.37	879
20	16	1.27	790	1.33	858	1.50	1090
25	16	1.45	967	1.51	1043	1.74	1403
30	16	1.50	1125	1.56	1203	1.79	1574
40	16	1.75	1556	1.81	1648	2.04	2075
50	16	1.98	1904	2.04	2010	2.27	2488
60	16	2.10	2228	2.16	2339	2.39	2843

NOTE—These values are for reference purposes only and should not be construed as requirements. Dimensions are based on the use of Class B conductors. Weights of Armored constructions are based on aluminum braid armor. It is recommended that the user/specifier contact the manufacturer for manufacturer specific values.

Copyright © 2001 IEEE. All rights reserved.

Copyright The Institute of Electrical and Electronics Engineers, Inc.
Provided by IHS under license with IEEE
No reproduction or networking permitted without license from IHS
Not for Resale

Table B.13—Typical dimensions and weights; paired shielded signal cable 600/1000 V; Type P cables

Number of pairs	Conductor size AWG	Unarmored		Armored		Armored and sheathed	
		Nom. dia. (in)	Approx. weight (lb/1000 ft)	Nom. dia. (in)	Approx. weight (lb/1000 ft)	Nom. dia. (in)	Approx. weight (lb/1000 ft)
			Individual and overall aluminum/polyester tape shields				
1	18	0.392	63	0.442	123	0.607	176
2	18	0.551	131	0.601	204	0.766	335
3	18	0.581	163	0.631	265	0.796	343
4	18	0.630	195	0.680	317	0.845	410
5	18	0.685	243	0.735	395	0.900	511
7	18	0.742	340	0.792	457	0.957	575
8	18	0.800	388	0.850	521	1.015	752
10	18	0.933	495	0.983	699	1.148	874
12	18	0.962	581	1.012	780	1.177	982
16	18	1.066	748	1.116	833	1.281	1182
18	18	1.123	824	1.173	1050	1.338	1300
24	18	1.314	1069	1.364	1151	1.529	1720
1	16	0.412	77	0.462	120	0.627	203
2	16	0.585	160	0.635	249	0.800	377
3	16	0.617	200	0.667	311	0.832	410
4	16	0.671	239	0.721	389	0.886	569
5	16	0.730	297	0.780	483	0.945	609
7	16	0.792	416	0.842	559	1.007	703
8	16	0.856	475	0.906	638	1.071	803
10	16	1.000	606	1.050	787	1.215	1098
12	16	1.032	711	1.082	923	1.247	1138
16	16	1.145	948	1.195	1231	1.360	1517
18	16	1.207	1100	1.257	1260	1.422	1570
24	16	1.415	1510	1.465	1625	1.630	2065
1	14	0.408	97	0.458	151	0.589	199
2	14	0.601	202	0.651	315	0.818	515
4	14	0.698	301	0.748	469	0.921	633
5	14	0.764	374	0.814	608	0.987	787
7	14	0.876	480	0.926	704	1.099	886
8	14	0.947	550	0.997	803	1.170	1011
10	14	1.109	747	1.159	1003	1.332	1196
12	14	1.145	896	1.195	1203	1.368	1434

NOTE—These values are for reference purposes only and should not be construed as requirements. Weights of armored constructions are based on bronze braid armor. It is recommended that the user/specifier contact the manufacturer for manufacturer specific values.

Copyright © 2001 IEEE. All rights reserved.

Copyright The Institute of Electrical and Electronics Engineers, Inc.
Provided by IHS under license with IEEE
No reproduction or networking permitted without license from IHS
Not for Resale

Table B.14—Typical dimensions and weights; triad shielded signal cable 600/1000 V; Type P cables

Number of triads	Conductor size AWG	Unarmored		Armored		Armored and sheathed	
		Nom. dia. (in)	Approx. weight (lb/1000 ft)	Nom. dia. (in)	Approx. weight (lb/1000 ft)	Nom. dia. (in)	Approx. weight (lb/1000 ft)
		Individual and overall aluminum/polyester tape shields					
1	18	0.380	75	0.430	144	0.561	199
2	18	0.624	183	0.674	290	0.805	380
3	18	0.662	190	0.712	305	0.885	393
4	18	0.726	281	0.776	408	0.949	551
5	18	0.796	286	0.846	419	1.019	561
7	18	0.911	409	0.961	565	1.134	724
8	18	0.985	515	1.035	680	1.208	870
12	18	1.193	766	1.243	965	1.416	1195
1	16	0.402	86	0.452	155	0.583	213
3	16	0.709	218	0.759	338	0.932	466
4	16	0.778	410	0.828	530	1.001	700
6	16	0.975	630	1.025	750	1.198	955
7	16	0.975	710	1.025	835	1.198	1050

NOTE—These values are for reference purposes only and should not be construed as requirements. Weights of armored constructions are based on bronze braid armor. It is recommended that the user/specifier contact the manufacturer for manufacturer specific values.

Table B.15—Typical dimensions and weights; twisted-pair signal cable 300 V; Type T/N cables, unshielded pairs

Number of pairs	AWG size	Unarmored		Armored		Armored and sheathed	
		Nom. dia. (in)	Approx. weight (lb/1000 ft)	Nom. dia. (in)	Approx. weight (lb/1000 ft)	Nom. dia. (in)	Approx. weight (lb/1000 ft)
1	20	0.26	31	0.32	47	0.41	79
2	20	0.36	51	0.42	72	0.51	112
3	20	0.40	66	0.46	87	0.59	153
4	20	0.44	80	0.50	104	0.63	175
5	20	0.48	95	0.54	122	0.67	198
6	20	0.50	107	0.56	134	0.69	212
8	20	0.58	150	0.64	181	0.77	269
10	20	0.65	180	0.71	213	0.88	343
15	20	0.72	242	0.78	279	0.95	421
20	20	0.79	303	0.85	343	1.02	496
25	20	0.94	408	1.00	455	1.17	608
30	20	0.99	469	1.05	519	1.22	697

Copyright © 2001 IEEE. All rights reserved.

Copyright The Institute of Electrical and Electronics Engineers, Inc.
Provided by IHS under license with IEEE
No reproduction or networking permitted without license from IHS
Not for Resale

Table B.15—Typical dimensions and weights; twisted-pair signal cable 300 V; Type T/N cables, unshielded pairs (continued)

Number of pairs	AWG size	Unarmored		Armored		Armored and sheathed	
		Nom. dia. (in)	Approx. weight (lb/1000 ft)	Nom. dia. (in)	Approx. weight (lb/1000 ft)	Nom. dia. (in)	Approx. weight (lb/1000 ft)
40	20	1.10	594	1.16	650	1.33	836
50	20	1.21	717	1.27	782	1.44	986
60	20	1.37	850	1.43	924	1.60	1146
1	18	0.28	38	0.34	54	0.44	92
2	18	0.39	66	0.45	87	0.58	152
3	18	0.44	88	0.50	112	0.63	183
4	18	0.48	109	0.54	136	0.67	212
5	18	0.56	148	0.62	179	0.75	265
6	18	0.58	167	0.64	198	0.77	286
8	18	0.64	208	0.70	241	0.83	337
10	18	0.72	252	0.78	289	0.95	431
15	18	0.80	347	0.86	387	1.03	542
20	18	0.91	477	0.97	524	1.14	697
25	18	1.04	583	1.10	636	1.27	830
30	18	1.09	677	1.15	733	1.32	935
40	18	1.22	868	1.28	933	1.45	1157
50	18	1.34	1057	1.40	1128	1.57	1371
60	18	1.52	1257	1.58	1337	1.81	1713
1	16	0.32	49	0.38	67	0.48	108
2	16	0.45	85	0.51	109	0.64	181
3	16	0.51	115	0.57	144	0.70	224
4	16	0.59	160	0.65	191	0.78	281
5	16	0.66	192	0.72	227	0.89	359
6	16	0.68	218	0.74	253	0.91	388
8	16	0.75	273	0.81	310	0.98	457
10	16	0.89	367	0.95	412	1.12	582
15	16	0.99	500	1.05	550	1.22	736
20	16	1.08	632	1.14	688	1.31	889
25	16	1.23	773	1.29	838	1.46	1063
30	16	1.30	901	1.36	969	1.53	1206
40	16	1.45	1160	1.51	1236	1.74	1596
50	16	1.59	1416	1.65	1499	1.88	1890
60	16	1.88	1797	1.94	1897	2.17	2353

NOTE—These values are for reference purposes only and should not be construed as requirements. Dimensions are based on the use of Class B conductors. Weights of armored constructions are based on aluminum braid armor. It is recommended that the user/specifier contact the manufacturer for manufacturer specific values.

Copyright © 2001 IEEE. All rights reserved.

Copyright The Institute of Electrical and Electronics Engineers, Inc.
Provided by IHS under license with IEEE
No reproduction or networking permitted without license from IHS
Not for Resale

Table B.16—Typical dimensions and weights; twisted-pair signal cable 300 V; Type T/N cables, shielded pairs

Number of pairs	AWG size	Unarmored		Armored		Armored and sheathed	
		Nom. dia. (in)	Approx. weight (lb/1000 ft)	Nom. dia. (in)	Approx. weight (lb/1000 ft)	Nom. dia. (in)	Approx. weight (lb/1000 ft)
1	20	0.26	32	0.32	48	0.41	80
2	20	0.40	56	0.46	77	0.59	143
3	20	0.43	69	0.49	93	0.62	163
4	20	0.47	84	0.53	111	0.66	186
5	20	0.51	99	0.57	128	0.70	208
6	20	0.59	132	0.65	163	0.78	253
8	20	0.63	160	0.69	193	0.82	288
10	20	0.74	195	0.80	232	0.97	377
15	20	0.89	299	0.95	344	1.12	514
20	20	0.98	369	1.04	419	1.21	603
25	20	1.11	445	1.17	501	1.34	707
30	20	1.14	507	1.20	563	1.37	774
40	20	1.28	640	1.34	708	1.51	942
50	20	1.45	778	1.51	854	1.74	1214
60	20	1.54	903	1.60	983	1.83	1363
1	18	0.28	43	0.34	59	0.44	97
2	18	0.44	80	0.50	104	0.63	175
3	18	0.47	103	0.53	130	0.66	205
4	18	0.51	128	0.57	157	0.70	237
5	18	0.59	172	0.65	203	0.78	293
6	18	0.64	199	0.70	232	0.83	328
8	18	0.69	248	0.75	283	0.92	420
10	18	0.81	305	0.87	348	1.04	504
15	18	0.97	463	1.03	513	1.20	696
20	18	1.08	586	1.14	642	1.31	843
25	18	1.22	714	1.28	779	1.45	1003
30	18	1.26	827	1.32	895	1.49	1125
40	18	1.42	1062	1.48	1138	1.65	1394
50	18	1.60	1302	1.66	1385	1.89	1779
60	18	1.77	1634	1.83	1728	2.06	2159
1	16	0.33	54	0.39	72	0.48	110
2	16	0.51	100	0.57	129	0.70	209
3	16	0.58	147	0.64	178	0.77	266
4	16	0.63	181	0.69	214	0.82	309
5	16	0.69	216	0.75	251	0.92	388
6	16	0.75	252	0.81	289	0.98	436

Copyright © 2001 IEEE. All rights reserved.

Copyright The Institute of Electrical and Electronics Engineers, Inc.
Provided by IHS under license with IEEE
No reproduction or networking permitted without license from IHS
Not for Resale

Table B.16—Typical dimensions and weights; twisted-pair signal cable 300 V; Type T/N cables, shielded pairs (continued)

Number of pairs	AWG size	Unarmored		Armored		Armored and sheathed	
		Nom. dia. (in)	Approx. weight (lb/1000 ft)	Nom. dia. (in)	Approx. weight (lb/1000 ft)	Nom. dia. (in)	Approx. weight (lb/1000 ft)
8	16	0.82	315	0.88	358	1.05	516
10	16	1.00	428	1.06	478	1.23	666
15	16	1.15	589	1.21	648	1.38	860
20	16	1.27	748	1.33	816	1.50	1048
25	16	1.45	914	1.51	990	1.74	1350
30	16	1.50	1061	1.56	1139	1.79	1510
40	16	1.75	1471	1.81	1563	2.04	1990
50	16	1.98	1798	2.04	1904	2.27	2382
60	16	2.10	2101	2.16	2212	2.39	2716

NOTE—These values are for reference purposes only and should not be construed as requirements. Dimensions are based on the use of Class B conductors. Weights of armored constructions are based on aluminum braid armor. It is recommended that the user/specifier contact the manufacturer for manufacturer specific values.

Copyright © 2001 IEEE. All rights reserved.

Copyright The Institute of Electrical and Electronics Engineers, Inc.
Provided by IHS under license with IEEE
No reproduction or networking permitted without license from IHS
Not for Resale

Annex C

(informative)

Conversion tables

Table C.1—Metric to English length conversions

Metric (mm)	English (in)	Metric (mm)	English (in)
0.00889	0.00035	0.01	0.0005
0.0127	0.0005	0.025	0.001
0.051	0.002	0.0635	0.0025
0.076	0.003	0.10	0.004
0.13	0.005	0.15	0.006
0.18	0.007	0.20	0.008
0.23	0.009	0.254	0.010
0.305	0.012	0.32	0.0126
0.38	0.015	0.51	0.020
0.63	0.025	0.76	0.030
0.88	0.035	1.02	0.040
1.14	0.045	1.27	0.050
1.40	0.055	1.52	0.060
1.65	0.065	1.90	0.075
2.03	0.080	2.29	0.090
2.41	0.095	2.67	0.105
2.79	0.110	2.92	0.115
3.05	0.120	3.56	0.140
4.44	0.175	5.46	0.215
6.60	0.260	7.11	0.280
8.76	0.345	10.16	0.400
10.17	0.401	10.66	0.420
10.80	0.426	12	0.5
15.24	0.600	15.25	0.601
17.78	0.700	18.04	0.710
20.32	0.800	20.33	0.801
22.23	0.876	24.13	0.950
24.14	0.951	25.4	1.000
25.41	1.001	26.03	1.025
26.04	1.026	28.6	1.125
31.8	1.250	34.9	1.375
38.1	1.500	38.11	1.501
41.3	1.625	50.8	2.000
50.81	2.001	63.50	2.500

Copyright © 2001 IEEE. All rights reserved.

Copyright The Institute of Electrical and Electronics Engineers, Inc.
Provided by IHS under license with IEEE
No reproduction or networking permitted without license from IHS
Not for Resale

Table C.1—Metric to English length conversions (continued)

76	3	100	4.0
150	6.0	254	10
380	15	406	16
450	18	1 m	39 in
1.1 m	42 in	1.5 m	4 ft 11 in
2 m	80 in	2.13 m	7 ft
15 m	50 ft	60 m	200 ft

Table C.2—Celsius to Fahrenheit temperature conversions

Temperature (°C)	Temperature (°F)	Temperature (°C)	Temperature (°F)	Temperature (°C)	Temperature (°F)
–25	–13	–10	14	0.55	1.0
1	1.5	4.4	40	5.0	41
5.6	42	6.1	43	6.7	44
7.2	45	7.8	46	8.3	47
8.9	48	9.4	49	10.0	50.0
10.6	51	11.1	52	11.7	53
12.2	54	12.8	55	13.3	56
13.9	57	14.4	58	15.0	59
15.6	60	16.1	61	16.7	62
17.2	63	17.8	64	18.3	65
18.9	66	19.4	67	20.0	68
20.6	69	21.1	70	22.2	72
22.8	72	22.8	73	23.3	74
23.9	75	24.4	76	25.0	77
25.6	78	26.1	79	26.7	80
27.2	81	27.8	82	28.3	83
28.9	84	29.4	85		
35.0	95	60	140	75	167
90.0	194	100	212	121	249

Copyright © 2001 IEEE. All rights reserved.

Copyright The Institute of Electrical and Electronics Engineers, Inc.
Provided by IHS under license with IEEE
No reproduction or networking permitted without license from IHS
Not for Resale

Table C.3—Force conversions

N/mm^2	lbf/in^2
4.8	700
5.5	800
6.2	900
8.2	1200
8.9	1300
9.6	1400
10.3	1500
12.5	1800
13.8	2000
350	50 000
61.3 N/cm	35 lbf/in

Table C.4—Insulation resistance constant conversions

MΩ·km	MΩ·(1000 ft)
610	2000
1220	4000
3050	10 000
6100	20 000

Table C.5—Water absorption conversions

mg/cm^2	mg/in^2
3.88	25
15.5	100
20.2	130

English treatment of subclause 5.17.4 and Table 21

C.5.17.4 Insulation resistance test

Each reel of finished cable should have the insulation resistance measured between each conductor and ground (metallic sheath, metallic shield, metallic armor, or water).

For single conductor cables rated 0–2000 V manufactured without shield or armor, the insulation resistance test is not required when spark tested according to spark test requirement of UL 1581, section 900, with the values of Table 20 in this recommended practice.

Copyright © 2001 IEEE. All rights reserved.

Copyright The Institute of Electrical and Electronics Engineers, Inc.
Provided by IHS under license with IEEE
No reproduction or networking permitted without license from IHS
Not for Resale

C.5.17.4.1 Method of test

Compliance with the insulation resistance test is determined in accordance with the method described in Clause 4.28.2 of CSA Standard C22.2 No. 03 or UL 1581. The insulation resistance constant K can be obtained from Table 12, Table 13, or Table 14 for the specific insulation under test.

The current should be measured after one minute with a continuous dc potential of not less than 100 V nor more than 500 V, the conductor being negative to ground. If the test for insulation resistance is carried out in water or air having a temperature differing from 60 ºF, the measured value should be multiplied by the proper correction factor, *M*, obtained from Table C-21. This factor appears in the formula for insulation resistivity

$$R = 3.28\ KM \log10(D/d)$$

where

R = insulation resistivity [**MΩ**·(1000 ft)]
K = insulation resistance constant (from Table 12, Table 13, or Table 14) (**MΩ** · km)
M = temperature correction factor to 60 ºF
D = diameter over the insulation
d = diameter under the insulation

The factor *M* should be determined in accordance with the method of C.5.17.4.2.

The measured insulation resistivity is related to the measured insulation resistance of the sample under test by the formula

$$R = 0.001\ R_{meas}L$$

where

R = insulation resistivity [**MΩ**·(1000 ft)]
R_{meas} = measured insulation resistance (**MΩ**)
L = length of the test sample (ft)

C.5.17.4.2 Test procedure for determining the multiplying-factor column for adjusting insulation resistance

C.5.17.4.2.1 Samples

Two samples, conveniently of a No. 14, 12, or 10 AWG solid conductor with a 0.045 in or 45 mil wall of insulation, are to be selected as representative of the insulation under consideration. The samples are to be of a length (at least 200 ft) that yields insulation-resistance values that are stable within the calibrated range of the measuring instrument at the lowest water-bath temperature.

C.5.17.4.2.2 Water bath temperature

The two samples are to be immersed in a water bath equipped with heating, cooling, and circulating facilities. The ends of the samples are to extend at least 2 ft above the surface of the water to reduce electrical leakage. The samples are to be left in the water at room temperature for 16 hours before adjusting the bath temperature to 50.0 °F or before transferring the samples to a 50.0 °F bath.

Copyright © 2001 IEEE. All rights reserved.

Copyright The Institute of Electrical and Electronics Engineers, Inc.
Provided by IHS under license with IEEE
No reproduction or networking permitted without license from IHS Not for Resale

C.5.17.4.2.3 DC resistance

The dc resistance of the metal conductor is to be measured at applicable intervals of time until the temperature remains unchanged for at least five minutes. The insulation is then to be considered as being at the temperature of the bath indicated on the bath thermometer.

C.5.17.4.2.4 Test temperatures

Each of the two samples is to be exposed (5.17.4.2.3 applies) to successive water temperatures of 50.0 °F, 61.0 °F, 72.0 °F, 82.0 °F, and 95.0 °F, and returning 82.0 °F, 72.0 °F, 61.0 °F , and 50.0 °F. Insulation-resistance readings are to be taken at each temperature after equilibrium is established.

C.5.17.4.2.5 Plot

The two sets of readings (four readings in all) taken at the same temperature are to be averaged for the two samples. These four average values and the average of the single readings at 95.0 °F are to be plotted on semilog paper. A continuous curve (usually a straight line) is to be drawn through the five points. The value of insulation resistance at 60.0 °F is then to be read from the graph.

C.5.17.4.2.6 Results

The resistivity coefficient C for a 1 ºF change in temperature is to be calculated to two decimal places by dividing the insulation resistance at 60.0 ºF read from the graph by the insulation resistance at 61.0 ºF. The temperature correction factor M required to correct to the standard test temperature of 60.0 ºF is then calculated from the formula

$$M = C^{(t-60)}$$

where

t is the actual test temperature in degrees Fahrenheit.

Copyright © 2001 IEEE. All rights reserved.

Copyright The Institute of Electrical and Electronics Engineers, Inc.
Provided by IHS under license with IEEE
No reproduction or networking permitted without license from IHS
Not for Resale

Copyright The Institute of Electrical and Electronics Engineers, Inc.
Provided by IHS under license with IEEE
No reproduction or networking permitted without license from IHS
Not for Resale