IEEE Standard for the Functioning of and Interfaces Among Propulstion, Friction Brake, and Train-borne Master Control on Rail Rapid Transit Vehicles

Sponsor

Rail Transit Vehicle Interface Standards Committee
of the
IEEE Vehicular Technology Society

Reaffirmed 9 June 2005
Approved 18 March 1999

IEEE-SA Standards Board

Abstract: The interfaces between and among functional systems on rail rapid transit vehicles is prescribed. The systems themselves are treated as “black boxes;” requirements for the input signals and the output response are given. For each category of interface, three type are listed in increasing technical sophistication.
Keywords: friction brake, interfaces, master control, propulsion, rail vehicles, rapid transit

---

The Institute of Electrical and Electronics Engineers, Inc.
3 Park Avenue, New York, NY 10016-5997, USA

Copyright © 1999 by the Institute of Electrical and Electronics Engineers, Inc.
All rights reserved. Published 30 June 2005. Printed in the United States of America.

IEEE is a registered trademark in the U.S. Patent & Trademark Office, owned by the Institute of Electrical and Electronics Engineers, Incorporated.

Print: ISBN 0-7381-1650-5 SH94736
PDF: ISBN 0-7381-1651-3 SS94736

No part of this publication may be reproduced in any form, in an electronic retrieval system or otherwise, without the prior written permission of the publisher.

Copyright The Institute of Electrical and Electronics Engineers, Inc.
Provided by IHS under license with IEEE
No reproduction or networking permitted without license from IHS
Not for Resale

IEEE Standards documents are developed within the IEEE Societies and the Standards Coordinating Committees of the IEEE Standards Association (IEEE-SA) Standards Board. Members of the committees serve voluntarily and without compensation. They are not necessarily members of the Institute. The standards developed within IEEE represent a consensus of the broad expertise on the subject within the Institute as well as those activities outside of IEEE that have expressed an interest in participating in the development of the standard.

Use of an IEEE Standard is wholly voluntary. The existence of an IEEE Standard does not imply that there are no other ways to produce, test, measure, purchase, market, or provide other goods and services related to the scope of the IEEE Standard. Furthermore, the viewpoint expressed at the time a standard is approved and issued is subject to change brought about through developments in the state of the art and comments received from users of the standard. Every IEEE Standard is subjected to review at least every five years for revision or reaffirmation. When a document is more than five years old and has not been reaffirmed, it is reasonable to conclude that its contents, although still of some value, do not wholly reflect the present state of the art. Users are cautioned to check to determine that they have the latest edition of any IEEE Standard.

Comments for revision of IEEE Standards are welcome from any interested party, regardless of membership affiliation with IEEE. Suggestions for changes in documents should be in the form of a proposed change of text, together with appropriate supporting comments.

Interpretations: Occasionally questions may arise regarding the meaning of portions of standards as they relate to specific applications. When the need for interpretations is brought to the attention of IEEE, the Institute will initiate action to prepare appropriate responses. Since IEEE Standards represent a consensus of all concerned interests, it is important to ensure that any interpretation has also received the concurrence of a balance of interests. For this reason, IEEE and the members of its societies and Standards Coordinating Committees are not able to provide an instant response to interpretation requests except in those cases where the matter has previously received formal consideration.

Comments on standards and requests for interpretations should be addressed to:

Secretary, IEEE-SA Standards Board
445 Hoes Lane
P.O. Box 1331
Piscataway, NJ 08855-1331
USA

Note: Attention is called to the possibility that implementation of this standard may require use of subject matter covered by patent rights. By publication of this standard, no position is taken with respect to the existence or validity of any patent rights in connection therewith. The IEEE shall not be responsible for identifying patents for which a license may be required by an IEEE standard or for conducting inquiries into the legal validity or scope of those patents that are brought to its attention.

Authorization to photocopy portions of any individual standard for internal or personal use is granted by the Institute of Electrical and Electronics Engineers, Inc., provided that the appropriate fee is paid to Copyright Clearance Center. To arrange for payment of licensing fee, please contact Copyright Clearance Center, Customer Service, 222 Rosewood Drive, Danvers, MA 01923 USA; (978) 750-8400. Permission to photocopy portions of any individual standard for educational classroom use can also be obtained through the Copyright Clearance Center.

and Electronics Engineers, Inc.
IEEE
nitted without license from IHS
Not for Resale

Introduction

(This introduction is not part of IEEE Std 1475-1999, IEEE Standard for the Functioning of and Interfaces Among Propulsion, Fiction Brake, and Train-borne Master Control on Rail Rapid Transit Vehicles.)

This introduction provides background on the rationale used to develop this standard, which may aid in the understanding, usage, and applicability of this standard.

Rail transit vehicles have been notable for their lack of standardization. Some real-life factors have contributed to this, primarily because of historic differences in the civil infrastructure and electrical power supply. This standard sets forth a framework for the interfaces among the propulsion system, friction brake system, and master control, but does not attempt to standardize the individual systems themselves and does not dictate that all vehicles must use the most advanced technology available.

This standard applies to rail transit vehicles, which are usually, but not exclusively, electrically powered. These vehicles include railway electric multiple unit (EMU) cars, Heavy rail vehicles (HRVs) (subway or elevated cars), Light rail vehicles (LRVs) (streetcars), including units that combine powered and unpowered trucks or axles. All of these vehicles can be operated under the control of a driver or varying levels of complexity of train control computer, which are lumped together for this purpose as vehicle on-board (master) control (VOBC). In general, the type of train operation does not normally affect the propulsion/brake interface, and this standard can be applied irrespective of the presence or absence of a human driver. Fully automated, driverless implementations of the above vehicle types are sometimes included in the mode of transit referred to as automated guideway transit (AGT) and, to the extent that the vehicle does not have other unique requirements, this standard can be applied. It is not intended that this standard be universally required for all AGT systems, and neither is it intended that this standard apply to locomotives hauling trains nor to locomotive-hauled (including “push-pull”) cars.

The classes of railway vehicles (such as those termed diesel multiple unit [DMU]), which use a diesel engine or other nonelectric prime mover, have features of the propulsion and braking systems used in these vehicles that are similar to those used in conventional electrically powered vehicles. To the extent that these systems are similar to those used in electrically powered vehicles, this standard can be applied.

NOTES:

1—Self-propelled railway vehicles operating on common carrier railroad trackage are subject to regulations issued by governmental bodies (e.g., federal, state, and local bodies). In selected jurisdictions, this is also true for rail transit vehicles. The user should recognize that such regulations always take precedence over a consensus standard.

2—Master control, as defined in 3.2 and utilized herein, is a term selected to apply broadly to any VOBC from manual control, as historically understood, to all forms of automatic train control (including, but not limited to, automatic train protection, automatic train stop, automatic train operation, and cab signals and all combinations thereof).

At the time this standard was completed, the VOBC/Propulsion/Brake Working Group had the following membership:

David R. Phelps, *Chair*

Nicholas J. Brearey	Harold B. Henderson	Rob E. McHugh
James H. Dietz	Paul E. Jamieson	Fred M. Perilstein
David Dimmer	Kevin D. Johnson	Radovan Sarunac
Harold C. Gillen	Richard J. Mazur	Matthieu Vanasse
George Heisey		Henry J. Wesling

Copyright © 1999 IEEE. All rights reserved.

and Electronics Engineers, Inc.
IEEE
nitted without license from IHS
Not for Resale

The following members of the balloting committee voted on this standard:

Robert Anderson
Linda Sue Boehmer
Lance G. Cooper
Brad Craig
Jim Dietz
Robert J. DiSilvestro
Charles P. Elms
John Ewing
Claude Gabriel
Harold C. Gillen
Robert L. Gottschalk
Yehuda Gross
Robert Heggestad
James R. Hoelscher
Paul E. Jamieson
Kevin D. Johnson
Donald A. Johnston
Don Kane
Ronald Kangas
Abe Kanner
James W. Kemp
William J. Kleppinger
Ron Lawrence
David A. Male
Thomas J. McGean
Robert E. McHugh
Kamel Mokhtech
Howard Moody
Ed Mortlock
Robert Pascoe
Fred M. Perilstein
William Petit
David R. Phelps
Alan F. Rumsey
Louis Sanders
Gene Sansone
Tom Sullivan
Arun Virginkar
Norman Vutz
David Yager

When the IEEE-SA Standards Board approved this standard on 18 March 1999, it had the following membership:

Richard J. Holleman, *Chair* **Donald N. Heirman,** *Vice Chair*
Judith Gorman, *Secretary*

Satish K. Aggarwal
Dennis Bodson
Mark D. Bowman
James T. Carlo
Gary R. Engmann
Harold E. Epstein
Jay Forster*
Ruben D. Garzon
James H. Gurney
Lowell G. Johnson
Robert J. Kennelly
E. G. “Al” Kiener
Joseph L. Koepfinger*
L. Bruce McClung
Daleep C. Mohla
Robert F. Munzner
Louis-François Pau
Ronald C. Petersen
Gerald H. Peterson
John B. Posey
Gary S. Robinson
Akio Tojo
Hans E. Weinrich
Donald W. Zipse

*Member Emeritus

Also included is the following nonvoting IEEE-SA Standards Board liaison:

Robert E. Hebner

Kim Breitfelder
IEEE Standards Project Editor

Copyright © 1999 IEEE. All rights reserved.
and Electronics Engineers, Inc.
IEEE
nitted without license from IHS
Not for Resale

Contents

1. Overview 1

1.1 Scope 1
1.2 Purpose 1

2. References 2

3. Definitions, abbreviations, and acronyms 2

3.1 Definitions 2
3.2 Abbreviations and acronyms 8

4. Complexity of interfaces 9

4.1 Type I interfaces 9
4.2 Type II interfaces 9
4.3 Type III interfaces 9

5. Functional interfaces 10

5.1 Emergency brake 10
5.2 Direction 11
5.3 Traction/brake mode selection 13
5.4 Modulation interfaces 17
5.5 Blending 25
5.6 Load weigh 27
5.7 Speed 28
5.8 Penalty brake 30
5.9 Spin/slide 31
5.10 No-motion detection 33
5.11 Alertness monitoring 34
5.12 Specialized brake functions 35
5.13 Specialized propulsion functions 36
5.14 Door status 38
5.15 Data and fault annunciation 39

Annex A (informative) Bibliography 41

Annex B (informative) Example block diagrams for the three interface types 42

Annex C (informative) Alternative forms of propulsion system response to power modulation interface signals 44

Copyright © 1999 IEEE. All rights reserved.

and Electronics Engineers, Inc.
IEEE
nitted without license from IHS

Not for Resale

Copyright The Institute of Electrical and Electronics Engineers, Inc.
Provided by IHS under license with IEEE
No reproduction or networking permitted without license from IHS
Not for Resale

IEEE Standard for the Functioning of and Interfaces Among Propulsion, Friction Brake, and Train-borne Master Control on Rail Rapid Transit Vehicles

1. Overview

This standard applies to new procurements or major rehabilitation of rail transit vehicles occurring on or after the effective date of this standard (18 March 1999). Existing rail transit vehicles and those vehicles that are currently being procured need not comply except where specifically required by the authority having jurisdiction. Where a need exists to maintain compatibility with existing rail transit vehicles, those portions of this standard in conflict with the compatibility requirement need not apply.

1.1 Scope

This standard prescribes the interface functionality among propulsion, friction brake, and train-borne master control. It encompasses performance parameters, communication methods, and the means for measurement and verification of performance. “Third party” systems performing functions traditionally carried out in one of the above systems are also covered.

1.2 Purpose

Numerous functional protocols presently exist for interfaces among train-borne master control, propulsion, friction brake, spin-slide control, etc. This has led to a lack of standardization, compatibility, and interchangeability, with attendant higher first cost and recurrent integration problems. Standards, when used by vehicle purchasers, carbuilders, and system suppliers, are expected to lower costs, reduce vehicle introduction problems, improve reliability, and facilitate upgrades. Standards will ensure prioritization of safety functionality.

`,,`---
and Electronics Engineers, Inc.
IEEE
nitted without license from IHS
Copyright © 1999 IEEE. All rights reserved.
Not for Resale

2. References

This standard shall be used in conjunction with the following publications. If the following publications are superseded by an approved revision, the revision shall apply. In case of a conflict between this standard and the referenced document, this standard shall take precedence. Those provisions of the referenced documents that are not in conflict with this standard shall apply as referenced.

IEEE Std 100-1996, The IEEE Standard Dictionary of Electrical and Electronics Terms, Sixth Edition.[1]

IEEE Std 1473-1999, IEEE Standard for Communication Protocol Aboard Trains.

IEEE P1476/D4.0, 16 April 1999, Interfaces for Passenger Train Auxiliary Power Systems.[2]

IEEE P1478/D4.0, 7 April 1999, Environmental Standards for Rail Rapid Transit Electronic Equipment.

IEEE P1482/D699, June 1999, Rail Vehicle Monitoring and Diagnostics Systems.

3. Definitions, abbreviations, and acronyms

3.1 Definitions

For the purposes of this standard, the following terms and definitions apply. IEEE Std 100-1996, The IEEE Standard Dictionary of Electrical and Electronics Terms, should be referenced for terms not defined in this clause. Because the rail transit industry possesses a significant amount of unique terminology, the *Urban Public Transportation Glossary* [B2][3] has been utilized as a source for many of the following definitions. *Webster's New Collegiate Dictionary* [B3] has been utilized as a general reference.

3.1.1 actual weight: The measured weight of a finished, ready-to-run vehicle; the tare weight. *Synonym:* **empty weight.**

3.1.2 adhesion (coefficient of): During rolling contact, the ratio between the longitudinal tangential force at the wheel-rail/running surface interface and the normal force.

3.1.3 alertness function: A device or system that monitors the operator for signs of incapacitation, usually by requiring movement or response to take place within a prescribed period of time.

3.1.4 authority: A geographical or political division created specifically for the single purpose of providing transportation service.

3.1.5 authority having jurisdiction: The entity that defines the contractual (including specification) requirements for the procurement.

3.1.6 automated guideway transit: Any guided transit mode with fully automated operation (i.e. no crew on the train). The term usually refers, however, only to guided modes with small and medium-sized vehicles that operate on exclusive right-of-way.

---

[1]IEEE publications are available from the Institute of Electrical and Electronics Engineers, 445 Hoes Lane, P.O. Box 1331, Piscataway, NJ 08855-1331, USA (http://www.standards.ieee.org/).

[2]Numbers preceded by P are IEEE authorized standards projects that were not approved by the IEEE-SA Standards Board at the time this publication went to press. For information about obtaining drafts, contact the IEEE.

[3]The numbers in brackets correspond to those in the bibliography in Annex A.

Copyright © 1999 IEEE. All rights reserved.
and Electronics Engineers, Inc.
IEEE
nitted without license from IHS
Not for Resale

3.1.7 automatic train control (ATC): The system for automatically controlling train movement, enforcing train safety, and directing train operations. ATC must include automatic train protection (ATP) and may include automatic train operation (ATO) and/or automatic train supervision (ATS).

3.1.8 automatic train operation (ATO): The subsystem within the automatic train control (ATC) system that performs any or all of the functions of speed regulation, programmed stopping, door control, performance level regulation or other functions otherwise assigned to the train operator.

3.1.9 automatic train protection (ATP): The subsystem within the automatic train control (ATC) system that maintains fail-safe protection against collisions, excessive speed, and other hazardous conditions through a combination of train detection, train separation, and interlocking.

3.1.10 automatic train stop: A wayside system that works in conjunction with equipment installed on the vehicle to apply the brakes at designated restrictions or on a dispatcher's signal, should the operator not respond properly.

3.1.11 automatic train supervision (ATS): The subsystem within the automatic train control (ATC) system that monitors trains, adjusts the performance of individual trains to maintain schedules, and provides data to adjust service to minimize the inconveniences otherwise caused by irregularities.

3.1.12 basic operating unit: (A) A single vehicle designed for independent operation. **(B)** A permanent or semipermanent combination, designed for independent operation, consisting of two or more vehicles of one or more types.

3.1.13 battery voltage: Voltage that is provided within specified limits by the low voltage power supply (or, in its absence, the control voltage on-board battery).

NOTE—Battery voltage limits are specified in IEEE P1476/D4.0.

3.1.14 blending: The combination of two or more modes of braking (e.g., rheostatic electric brake, regenerative electric brake, and friction brake) to produce the desired total retarding effort.

3.1.15 brakes applied: An indication that all friction brakes are applied to some agreed-upon preset level.

3.1.16 braking effort: Longitudinal retarding force generated by the friction brake system or the propulsion system (in electric brake).

3.1.17 builder: The entity manufacturing the product.

3.1.18 cab signal (system): A signal located in the cab, indicating a condition affecting the movement of a train and used in conjunction with interlocking signals and in conjunction with or in lieu of block signals.

3.1.19 car: *See:* **vehicle.**

3.1.20 car builder: The entity assembling or manufacturing the vehicle.

3.1.21 coast: The mode of operation of a vehicle or train in which both tractive effort from the propulsion system and braking effort from the propulsion and friction brake systems are zero.

NOTE—The inherent design characteristics of some propulsion systems require that a negligible level of electric brake be present in the coast mode.

3.1.22 cock: A pneumatic device having two positions, closed/shut and open/through.

--`,,`,`-`-`,,`,,`,`,,`---
Copyright © 1999 IEEE. All rights reserved.
and Electronics Engineers, Inc.
IEEE
nitted without license from IHS
Not for Resale

3.1.23 consist: The makeup or composition (number and specific identity) of individual units of a train.

3.1.24 control voltage: Voltage that is provided for operating the controlled elements of the vehicle. *See also:* **battery voltage.**

NOTE—Control voltage may or may not be the same nominal potential as the battery voltage.

3.1.25 crush loaded weight: The weight of a vehicle when loaded with crew, all seats occupied, and standees to a specified maximum number.

3.1.26 cut out: The state of being disabled by the conscious use of a cutout device or function.

3.1.27 cutout: A device or function whose purpose is deliberately to disable a specified device or function, e.g., “dynamic brake cutout.”

3.1.28 data recorder: The device used to record any type of data.

3.1.29 data recording: The act of recording any type of data.

3.1.30 deadman: A pressure- or activity-actuated alertness device to detect inattention or disability of a train operator.

NOTE—A deadman can be contained within the master controller main handle grip, obtained by a separate foot switch, or obtained through an alertness type function. The device, when not properly maintained in an operational condition, will result in an emergency or full service brake application.

3.1.31 derail detector: A device so arranged as to detect a derailment condition.

3.1.32 doors closed: A state, as given by trainline signal indication, in which doors are fully closed and locked.

3.1.33 doors locked: The condition reached in the door-closing cycle when the drive has achieved a latching condition that will hold doors closed mechanically until a door-opening cycle is initiated.

3.1.34 doors open: A state, as given by trainline signal indication, in which doors are not fully closed and locked.

3.1.35 electric brake: A mode of operation of the propulsion system in which retardation is provided.

NOTE—Although generally considered synonymous with dynamic brake, electric brake is a more global term, in that it includes the possibility of providing retardation by drawing power from the line or by other means not dependent on conversion of kinetic energy into retarding power, which is the key element of dynamic braking.

3.1.36 electric coupler: A device used to allow trainline signals to be transmitted from vehicle to vehicle or unit to unit in a train, with the connection of trainlines performed automatically when vehicles are coupled.

3.1.37 emergency brake: Fail-safe, open-loop braking to a complete stop with an assured maximum stopping distance, considering all relevant factors. Once the brake application is initiated, it is irretrievable, i.e., it cannot be released until the train has stopped or a predetermined time has passed.

3.1.38 empty weight: *See:* **actual weight.**

3.1.39 event recorder: An on-board device/system with crashworthy memory that records data to support accident/incident analysis.

Copyright © 1999 IEEE. All rights reserved.
and Electronics Engineers, Inc.
IEEE
nitted without license from IHS
Not for Resale

3.1.40 fade: (A) The condition occurring during a braking cycle at low speed wherein the fundamental characteristics of the propulsion system utilized do not support the power requirement of the level of dynamic electric brake called for. Consequently, the level of dynamic electric brake actually generated decreases as a function of speed along an inherent characteristic. **(B)** In electric braking systems capable of supporting the level called for to zero speed, a deliberately created characteristic wherein the level of electric brake decreases as a function of speed to allow a smooth transition to friction brake for the purpose of the final stop.

3.1.41 fail-safe: A design philosophy applied to safety-critical systems such that the result of a hardware failure or the effect of software error shall either prohibit the system from assuming or maintaining an unsafe state or shall cause the system to assume a state known to be safe.

3.1.42 forward: The direction of motion of the train corresponding to the direction of vision of an operator or attendant when occupying his or her normal position in a normal orientation.

NOTE—For an unattended vehicle, forward may be defined by the prevailing direction of operation on the guideway segment being utilized.

3.1.43 friction brake: The system of pneumatic, electropneumatic, hydraulic, electrohydraulic, or electric valves, controls, actuators and associated components which, in combination, provide the capability of braking the vehicle to a stop purely by the action of friction devices upon the wheel tread, disc rotors, or other surfaces.

3.1.44 full field: In a propulsion system, the motor connection in which, for series motors, the exciting field current is the same as the armature current, or, for separately excited motors, the exciting field current is at its maximum value relative to the armature current.

3.1.45 heavy rail transit: A mode of rail rapid transit generally characterized by fully grade-separated construction, operation on exclusive rights-of-way, and station platforms at the floor level of the vehicles.

3.1.46 heavy rail vehicle: A vehicle operating on a heavy rail transit system. Typically, electrically propelled, bidirectional, capable of operating in multiple unit, and designed for rapid, high-level boarding and discharging of passengers.

3.1.47 light rail transit: A mode of rail transit characterized by its ability to operate on exclusive rights-of-way, street running, center reservation running, and grade crossings, and its ability to board and discharge passengers at track or vehicle floor level.

3.1.48 light rail vehicle: A vehicle that operates on a light rail transit system, capable of boarding and discharging passengers at track or vehicle floor level.

3.1.49 load weighing: A function incorporated in the propulsion or friction brake system that measures changes in sprung vehicle weight. Its purpose is to permit control of tractive effort in order to achieve a constant effort-to-weight ratio for a given master control command.

3.1.50 master control: The train-borne device or system directly providing the control signals to the train.

3.1.51 master controller: A physical device utilized by a human operator to provide the master control of a train.

3.1.52 multiple unit: A system of simultaneous control of all vehicles in a consist from one master control through the means of trainlines.

Copyright © 1999 IEEE. All rights reserved.

and Electronics Engineers, Inc.
IEEE
nitted without license from IHS
Not for Resale

3.1.53 no motion: A safety-critical function utilized to indicate that the train is at zero speed or sufficiently close to zero speed. Used to inhibit the ability of the doors to open when the train is moving and can be used for functions, such as emergency brake reset, that may require an indication of the no motion condition.

3.1.54 parallel: In a propulsion system, the motor circuit in which the final parallel or series-parallel motor connection is achieved and the maximum available per-motor voltage is applied.

3.1.55 panic brake: Using any available form of braking, whether or not fail-safe, to obtain the shortest possible stopping distance.

3.1.56 parking brake: A means that supplies static braking forces to maintain a vehicle or train in a no motion state.

3.1.57 penalty brake: A function of the automatic train protection portion of the master control system, accomplished by a safety critical, full-service, or emergency brake application.

NOTE—Although most commonly associated with an overspeed operating condition, penalty braking may be initiated for a variety of reasons, depending on the vehicle design and the requirements of the authority having jurisdiction.

3.1.58 pneumatic brake pipe: A pressurized air line, continuous over the length of the train, used variously to indicate train integrity, provide indication of a emergency condition, equalize reservoir pressures, or propagate a brake application signal.

3.1.59 power knock out: A function, derived from friction brakes being applied above a low preset level on any truck, that removes propulsion power on every vehicle in the train.

3.1.60 propulsion system: The system of motors, drive mechanisms, controls, and other devices that propels or retards a vehicle.

3.1.61 purchaser: An entity that contractually acts as the customer.

3.1.62 redundancy: The existence in a system of more than one means of accomplishing a given function.

3.1.63 regenerative brake: A form of dynamic brake in which the electrical energy generated by braking is returned to the power supply line, provided to on-board loads, or a combination thereof during the braking cycle instead of being dissipated in resistors.

3.1.64 reliability: The probability that a system will perform its intended functions without failure, within design parameters, under specific operating conditions, and for a specific period of time.

NOTE—The ambient environmental conditions for operation are specified by the authority having jurisdiction, or, in the absence of such specifications, are specified by IEEE P1478/D4.0.

3.1.65 reverse: The direction of operation that is opposite to forward.

3.1.66 reverser: (A) The portion of the master controller used to change the commanded direction of train movement. **(B)** A circuit device used to change motor connections in order to change the direction of motor rotation and thus train movement.

3.1.67 rheostatic brake: A form of dynamic brake in which the electrical energy generated by braking is dissipated as heat in on-board resistors during the braking cycle.

Copyright © 1999 IEEE. All rights reserved.
and Electronics Engineers, Inc.
IEEE
nitted without license from IHS
Not for Resale

3.1.68 safety critical: A term applied to a system or function, the correct performance of which is critical to safety or personnel and/or equipment; also a term applied to a system or function, the incorrect performance of which may result in an unacceptable risk of a hazard. *See also:* **fail-safe.**

NOTE—A safety critical designation may require the incorporation of additional special safety design features.

3.1.69 sanding: Dropping or blowing of sand or similar material on the top of the rail head to increase the coefficient of friction to obtain better adhesion.

3.1.70 series: In a propulsion system, the motor connection in which all motors are connected in a series circuit for the purpose of applying to them some fraction (usually one half) of the maximum available per-motor voltage.

3.1.71 service: The operation of the vehicles under normal conditions with or without revenue passengers.

3.1.72 service brake (maximum): A nonemergency brake application that obtains the (maximum) brake rate that is consistent with the design of the brake system, retrievable under the control of master control.

3.1.73 service braking: *See:* **service brake (maximum).**

3.1.74 snow brake: A constant application of light friction brake intended to create enough heat to mitigate the buildup of snow and ice, which would interfere with the brake actuators.

3.1.75 straight air brake: An arrangement of brakes whereby air is admitted from the main reservoir through a brake valve to the straight air pipe to the brake cylinders in the operating unit.

NOTE—In most rail transit vehicle applications, an electropneumatic overlay is utilized to assist in the straight air brake command transmission.

3.1.76 straight air pipe: A method of transmitting a pneumatic command from the active cab to the straight air brake equipment on each vehicle in the operating unit.

3.1.77 supplier: The entity that contractually acts as the source of a product.

NOTE—The supplier may or may not be the actual builder.

3.1.78 switch (position): In a propulsion system, the historic name for the lowest level of positive tractive effort and power; so called because it is typically utilized for slow-speed switching movements, such as yard moves, train makeup, etc.

3.1.79 track brake: A magnetic friction brake that compresses against the running rail and is activated by an electrical signal.

3.1.80 traction system: *See:* **propulsion system.**

3.1.81 tractive effort: The force generated at the wheel-rail interface as a result of the action of the propulsion system. It may be either positive, indicating motoring/powering, or negative, indicating brake.

3.1.82 train: A consist of one or more basic operating units.

3.1.83 trainline(s): Wires routed through and/or between vehicles or units by means of couplers, jumpers, or other means so that power or signals may be transmitted to all vehicles of the train.

--`,,`,`-`-`,,`,,`,`,,`---

Copyright © 1999 IEEE. All rights reserved.

and Electronics Engineers, Inc.
IEEE
nitted without license from IHS
Not for Resale

3.1.84 trip switch/cock: A device mounted on the truck of a vehicle, responding to a raised arm on the wayside, used to cause an emergency brake application if a train attempts to pass a mandatory stop signal.

3.1.85 truck: A rail vehicle component that consists of a frame—normally two axles, brakes, suspension, and other parts—and supports the vehicle body and can swivel under it on curves. If powered, it may also contain traction motors and associated drive mechanisms.

3.1.86 unit: *See:* **basic operating unit.**

3.1.87 vehicle: A land conveyance assembly for carrying or transporting people or objects, capable of traversing a guideway, having structural integrity and general mechanical completeness, but not necessarily designed for independent operation.

3.1.88 weak field: In a propulsion system, a motor connection or operating mode in which the exciting field current is less than the full field value.

3.1.89 wheel diameter compensation: A function that corrects for either the wear of the wheel(s) or the difference(s) in rolling diameter between different wheels on the vehicle or both.

3.1.90 wheel slide: During braking, the condition existing when the rotational speed of the wheel is slower than that for pure rolling contact between tread and rail/running surface.[4]

3.1.91 wheel slip: The condition existing when the rotational speed of the wheel does not correspond with pure rolling contact between tread and rail/running surface.[5]

3.1.92 wheel spin: During acceleration, the condition existing when the rotational speed of the wheel is faster than that for pure rolling contact between tread and rail/running surface.[6]

3.2 Abbreviations and acronyms

AGT	automated guideway transit
ATC	automatic train control
ATO	automatic train operation
ATP	automatic train protection
ATS	automatic train stop; automatic train supervision
DMU	diesel multiple unit
EMU	electric multiple unit
HRV	heavy rail vehicle
LCD	liquid crystal display
LED	light emitting diode
LRV	light rail vehicle
PWM	pulse width modulation
TRB	Transportation Research Board
VOBC	vehicle on-board (master) control

[4]For convenience and simplicity, the definitions of wheel slide, wheel slip, and wheel spin ignore the presence of the microslip phenomenon generally called “creep,” physically necessary to generate longitudinal force at the wheel-rail interface.

[5]See footnote 4.

[6]See footnote 4.

--`,,`,,`-`-`,,`,,`,`,,`---

Copyright © 1999 IEEE. All rights reserved.
and Electronics Engineers, Inc.
IEEE
nitted without license from IHS
Not for Resale

4. Complexity of interfaces

For each of the interfaces specified in Clause 5, standards are established for up to three levels of complexity. In using this standard, the authority having jurisdiction shall specify a level of complexity for each interface, consistent with the design requirements of the vehicle.

NOTE—The requirements for some interfaces, as defined in this standard, may preclude the use of some interface types. In those instances, this standard will specify the type of interface to be used (e.g., “Same as Type I interface”).

4.1 Type I interfaces

A Type I interface, in the context of this standard, has the following characteristics:

a) Interface signals are primarily of the “off-on” form.
b) Except where the nature of the interface requires otherwise, the signals are transmitted at the voltage level of the control battery system.
c) Signal flow across a given interface is one-way.
d) Fault annunciation is limited to simple indicating lights or similar means.
e) No data recording or fault logging is provided, except as may be required by regulation.

4.2 Type II interfaces

A Type II interface, in the context of this standard, has the following characteristics:

a) Interface signals are a mix of digital and analog/proportional signals, usually at the vehicle battery voltage or from a power supply derived therefrom.
b) Signal flow across a given interface remains one way.
c) Fault annunciation is still limited to indicating lights or similar means, but more indications, both local and trainlined, may be provided.
d) Data recording or fault logging, if provided, is done at one system level, either at the vehicle level or at the functional system level. Both levels may be provided, but there is no exchange of information between the levels.

4.3 Type III interfaces

A Type III interface, in the context of this standard, has the following characteristics:

a) Most interface functions extensively use serial communication links or data buses.
b) Signal flow and communication across interfaces are two-way.
c) Comprehensive system, vehicle, and train information displays are available to the operator.
d) Integrated data recording and fault logging is provided, in which information is shared among system levels, including train level, vehicle level, and functional system level.

An example of a simplified block diagram for a consist of vehicles comprising Type I, Type II, and Type III interfaces is given in Annex B, Figure B.1, Figure B.2 and Figure B.3, respectively.

--`,,`,`-`-`,,`,,`,`,,`---

Copyright © 1999 IEEE. All rights reserved.

and Electronics Engineers, Inc.
IEEE
itted without license from IHS
Not for Resale

5. Functional interfaces

5.1 Emergency brake

5.1.1 Interfaces

To meet the safety critical requirements, the interfaces for the emergency brake shall be Type I. The emergency brake interface shall be one chosen from the following:

a) Trainlined pneumatic brake pipe
b) Trainlined pneumatic brake pipe with one digital battery trainline overlay (one or two wire, single or double break)
c) Four digital battery voltage trainlines; loop configuration with origin and destination being the same device:
   2 wires—battery positive
   2 wires—battery negative

NOTE—If the four-wire method is used, the voltage drop over wire length must be considered. The purchaser may select combinations of these methods.

5.1.2 Signal origin(s)

Any of the following systems or components, as utilized, shall be capable of initiating an emergency brake application as specified by the authority having jurisdiction:

— Master control
— Brake pipe and brake pipe control details
— Coupler equipment
— Derail detector
— Main reservoir pressure
— Passenger/crew emergency function
— Trip cock/trip switch
— Truck excess swivel
— Logic functions within the propulsion or friction braking systems

5.1.3 Signal destination(s)

The following systems shall receive an emergency brake signal:

— Master control
— Friction brake system
— Propulsion system
— Spin-slide system (if a separate functional system)

5.1.4 Signal characterization

For pneumatic or electric emergency brake system, signal condition shall be as follows:

— Presence of control signal = “1” = no emergency
— Absence of control signal = “0” = emergency

The emergency brake control must be treated as a safety critical interface function.

Copyright © 1999 IEEE. All rights reserved.
and Electronics Engineers, Inc.
IEEE
nitted without license from IHS
Not for Resale

The safety critical interface function of an emergency brake control arrangement shall be validated by conducting a formal analysis (e.g., fault tree analysis).

All devices attached to the emergency control circuit shall be in the nonemergency position in order properly to charge the emergency circuit. The charging apparatus shall not be capable of preventing an emergency application when both are simultaneously ordered.

Actions or changes in condition that initiate an emergency brake application shall include, but not be limited to, a rapid loss of brake pipe pressure (a small quantity of leakage shall be allowable), trip cock arm activation, main reservoir pressure below a specified value, etc. Transients that are less than 20 ms in duration shall not result in an emergency brake application.

NOTE—This transient time does not affect emergency brake operation.

Any monitoring of the emergency brake operation shall be independent of the primary control circuit; that is, the monitoring shall not have an impact on safety critical operation.

NOTES:

1—For pneumatic brake pipe arrangements, both with and without electric overlay, the charging of the brake pipe shall be accomplished from the controlling cab or shall utilize a sequential charging arrangement initiated at the controlling cab to verify the integrity of the pneumatic brake pipe. The electric overlay may be either deenergized (preferred) or energized to achieve the function.

2—For those emergency brake systems using a pneumatic brake pipe, the emergency braking stopping distance shall be calculated based on a pneumatic transmission only. (The pneumatic brake pipe arrangement with electric overlay is utilized to improve the response time.)

5.2 Direction

Table 1 lists the signal origins, destinations, and characterization for the interfaces for the control of train direction.

Table 1—Interfaces for the control of train direction

Interfaces	Signal origin(s)	Signal destination(s)	Signal characterization
Type I interfaces: Selection of direction of travel	Master control	Propulsion system	Presence of control battery voltage = “1” Absence of control battery voltage = “0”
Type II interfaces: Same as Type I interfaces			
Type III interfaces: Selection of direction of travel	Master control	Propulsion system	Serial transmission redundant As small as 2 b

5.2.1 Type I interfaces

5.2.1.1 Interfaces

A two-wire system using battery-level control voltage, mirrored in the electric coupler, shall be used to command the direction of travel. One wire shall be designated the *forward trainline wire*. When energized to a “1” state, the train shall be configured to move in the designated forward direction. One wire shall be desig-

Copyright © 1999 IEEE. All rights reserved.

and Electronics Engineers, Inc.
IEEE
nitted without license from IHS
Not for Resale

nated the *reverse trainline wire*. When energized to a "1" state, the train shall be configured to move in the designated reverse direction. If neither wire is energized, no propulsion (positive tractive effort) shall result. If both wires are energized, a fault condition shall result, and, if the train is equipped with appropriate monitoring equipment, a fault may be logged. See Table 2.

Table 2—Type I direction control interface

Trainline wires	Forward	Reverse
Forward mode	1	0
Reverse mode	0	1
No propulsion	0	0
(Fault condition)	1	1

The direction control shall be interlocked so that the direction call can only be changed if the vehicle is in the coast or any brake mode and meets the no motion criteria described in 5.10.

5.2.1.2 Signal origin(s)

The signal origin shall be the master control.

5.2.1.3 Signal destination(s)

The signal destination shall be the propulsion system.

5.2.1.4 Signal characterization

All signals shall be trainlined to allow all vehicles to respond simultaneously.

— Presence of control battery voltage = "1"
— Absence of control battery voltage = "0"

5.2.2 Type II interfaces

Type II interfaces shall be the same as Type I interfaces.

5.2.3 Type III interfaces

5.2.3.1 Interfaces

Interface functionality shall be the same as Type I interface, but shall be implemented in accordance with 5.2.3.4.

5.2.3.2 Signal origin(s)

Signal origins shall be the same as Type I interface.

Copyright © 1999 IEEE. All rights reserved.
and Electronics Engineers, Inc.
IEEE
nitted without license from IHS
Not for Resale

5.2.3.3 Signal destination(s)

Signal destinations shall be the same as Type I interface.

5.2.3.4 Signal characterization

Signals shall be transmitted by a serial communications bus meeting the requirements of IEEE Std 1473-1999. At least two bits shall be utilized, with transport time of 100 ms or less.

5.3 Traction/brake mode selection

5.3.1 Manual control

Manual control shall be by a combined brake and traction master controller that shall provide traction and brake control by means of a single control device. The device shall have positions (with a maximum of six detents) for traction control as specified by the authority having jurisdiction.

The device shall have positions (with a maximum of nine detents) for brake control as specified by the authority having jurisdiction.

The device position intermediate between the traction and brake regions shall be detented and shall be the coast position.

There may be provided, as an option, a manual “car wash/crawl” interface to master control for the purpose of commanding the propulsion system to apply power at a low, controlled speed.

5.3.2 Power/coast/brake selection

Table 3 lists the signal origins, destinations, and characterization for the interfaces for the control of the selection of power, coast, or brake.

Table 3—Interfaces for selection of power, coast, or brake

Interfaces	Signal origin(s)	Signal destination(s)	Signal characterization
Type I interfaces: Selection of vehicle operating mode	Master control	Propulsion system Brake systems	Presence of control battery voltage = “1” Absence of control battery voltage = “0”
Type II interfaces: Same as Type I interfaces			
Type III interfaces: Selection of vehicle operating mode	Master control	Propulsion system Brake system	Serial communications bus

5.3.2.1 Type I interfaces

5.3.2.1.1 Interfaces

Three discrete traction/brake operating modes shall be provided:

a) Brake

Copyright © 1999 IEEE. All rights reserved.

and Electronics Engineers, Inc.
IEEE
itted without license from IHS
Not for Resale

b) Coast
c) Power (traction propulsion motoring)

These modes shall be achieved by battery voltage trainline wires, as shown in Table 4.

Table 4—Type I power/coast/brake control interface

Trainline wires	Power	Brake
Power mode	1	1
Coast mode[a]	0	1
Brake mode	0	0
(Fault condition)[a]	1	0

[a]No propulsion (motoring or electric brake).

In addition, to achieve power, one of the direction trainline wires must be energized as described in 5.2.1.1.

5.3.2.1.2 Signal origin(s)

The signal origin shall be the master control.

5.3.2.1.3 Signal destination(s)

The signal destinations shall be the propulsion system and the friction brake system.

5.3.2.1.4 Signal characterization

All signals shall be trainlined to allow all vehicles to respond simultaneously.

— Presence of control battery voltage = “1”
— Absence of control battery voltage = “0”

The three traction/brake operating modes described in 5.3.2.1.1 shall be achieved by means of battery voltage trainline wires.

5.3.2.2 Type II interfaces

Type II interfaces shall be the same as Type I interfaces.

5.3.2.3 Type III interfaces

5.3.2.3.1 Interfaces

The signal interface shall be the selection of vehicle traction/brake operating mode.

5.3.2.3.2 Signal origin(s)

The signal origin shall be the master control.

--`,,`,`-`-`,,`,,`,`,,`---

Copyright © 1999 IEEE. All rights reserved.
and Electronics Engineers, Inc.
IEEE
nitted without license from IHS
Not for Resale

5.3.2.3.3 Signal destination(s)

The signal destinations shall be the propulsion system and the friction brake system.

5.3.2.3.4 Signal characterization

The three traction/brake operating modes described in 5.3.2 shall be achieved by means of a serial communications bus in accordance with IEEE Std 1473-1999. The mode selection word shall be two bits, analogous to the discrete battery voltage trainlines of simpler vehicles. Transport time shall be 100 ms or less.

5.3.3 Parking brake

Table 5 lists the signal origins, destinations, and characterization for the interfaces for the control of the parking brake.

Table 5—Interfaces for the control of the parking brake

Interfaces	Signal origin(s)	Signal destination(s)	Signal characterization
Type I interfaces: Parking brake application Parking brake status	Master control Parking brake control	Parking brake system Master control, propulsion and/or friction brake systems	Presence of control battery voltage = “1” Absence of control battery voltage = “0”
Type II interfaces: Same as Type I interfaces			
Type III interfaces: Parking brake application Parking brake status	Master control Parking brake control	Parking brake system Master control, propulsion and/or friction brake systems	Serial communications bus

5.3.3.1 Type I interfaces

5.3.3.1.1 Interfaces

The interfaces described herein are command and feedback interfaces.

There shall be a parking brake applied status signal. There may be a parking brake application request signal. If a discrete parking brake released signal is desired, it may be provided separately or may be combined with the service brake released signal.

5.3.3.1.2 Signal origin

The origin of the parking brake applied and parking brake released status signals shall be the parking brake control or actuators on each vehicle. The origin of the application request signal, if utilized, shall be the master control.

5.3.3.1.3 Signal destinations

The destination of the applied and released status signals shall be the master control (for annunciation), the friction brake system, and/or the propulsion system. The destination of the application request signal shall be the parking brake control or actuators.

Copyright © 1999 IEEE. All rights reserved.

and Electronics Engineers, Inc.
IEEE
nitted without license from IHS
Not for Resale

5.3.3.1.4 Signal characterizations

Command and feedback signals shall be battery voltage.

a) Application request—"0" to apply, "1" to release
b) Brake applied—"1" for applied
c) Brake released—"1" for released

NOTE—If both applied and released status indications are used, the steady-state simultaneous presence or absence of both signals shall be treated as a fault condition.

5.3.3.2 Type II interfaces

Type II interfaces shall be the same as Type I interfaces.

5.3.3.3 Type III interfaces

The Type III interfaces shall be the same as Type I interfaces, except that communication shall be by serial communications bus in accordance with IEEE Std 1473-1999. Each command or feedback signal requires 1 b; response timing shall be 250 ms or less.

5.3.4 Friction brakes applied

There shall be provided a power knock out signal and a friction brakes applied signal.

NOTE—If the snow brake interface is utilized, the low preset level must consider this interface. The low preset must be above the snow brake pressure setting.

5.3.4.1 Type I interfaces

5.3.4.1.1 Interfaces

The friction brakes applied signals shall be battery voltage digital on/off train lines.

5.3.4.1.2 Signal origin

The origin of the signals shall be the friction brake system.

5.3.4.1.3 Signal destinations

The destination of the signals shall be the master control.

5.3.4.1.4 Signal characterizations

Power knock-out	1 = at least one truck friction brakes applied
Friction brakes applied	1 = all trucks friction brakes applied

5.3.4.2 Type II interfaces

Type II interfaces shall be the same as Type I interfaces.

Copyright © 1999 IEEE. All rights reserved.
and Electronics Engineers, Inc.
IEEE
nitted without license from IHS
Not for Resale

5.3.4.3 Type III interfaces

The Type III interface shall be same as Type I interfaces, except that communication shall be by a serial communications bus in accordance with IEEE Std 1473-1999. Each signal requires 1 b; response timing shall be 100 ms or less.

5.4 Modulation interfaces

Although the power modulation and braking modulation interfaces are herein separately described for convenience, it should be noted that with Type II interfaces and Type III interfaces, the modulation of power and braking is continuous, with maximum braking achieved with the minimum modulation signal, coast achieved with a midpoint signal, and maximum power achieved with the maximum modulation signal.

For Type II interfaces specifically, a pulse-width-modulation (PWM) trainline is described in detail below. The characteristics and usage of this trainline are illustrated in Figure 1 and Figure 2, respectively.

NOTE—For the purpose of this standard, ac and dc current loop modulation arrangements and PWM systems based on the Verband Öffentlicher Verkehrsbetriebe (VÖV) 6.325.1 and derivatives thereof, although widely used, are not recommended for new applications.

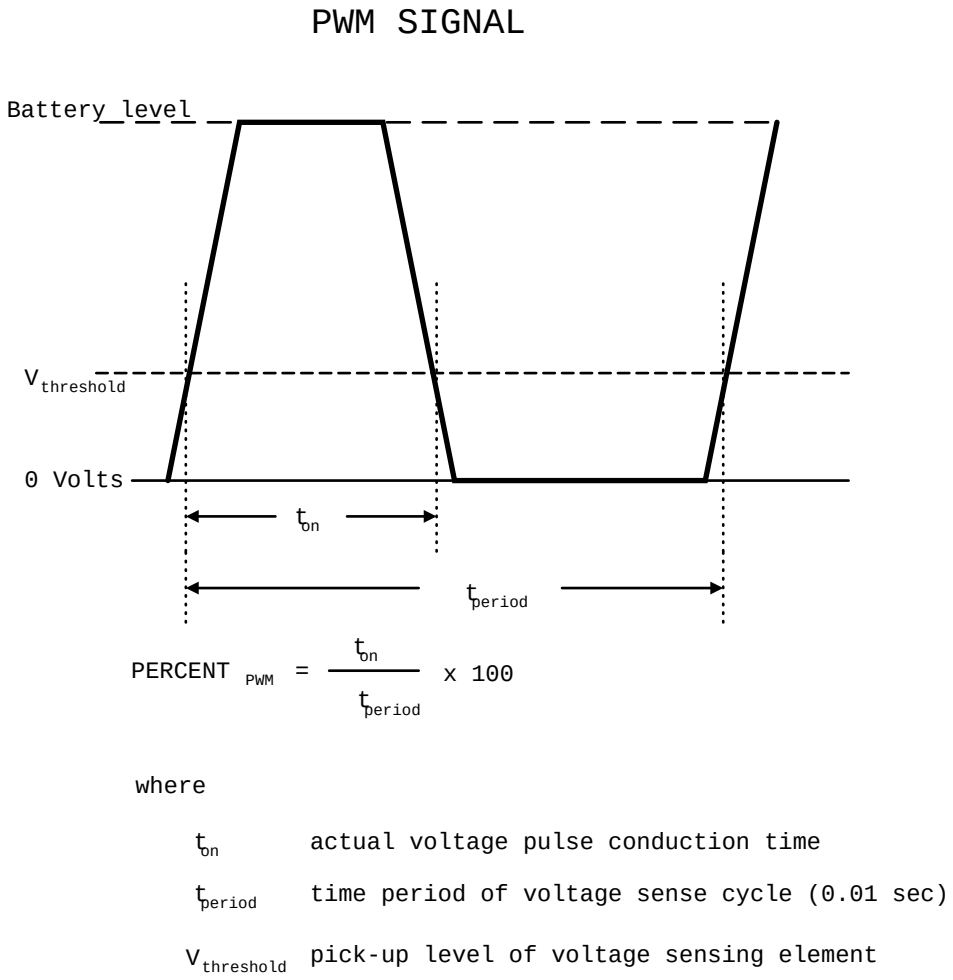

Figure 1—Time-ratio control using pulse-width-modulation (PWM)

--`,,`,`-`-`,,`,,`,`,,`---

Copyright © 1999 IEEE. All rights reserved.

and Electronics Engineers, Inc.
IEEE
nitted without license from IHS

Not for Resale

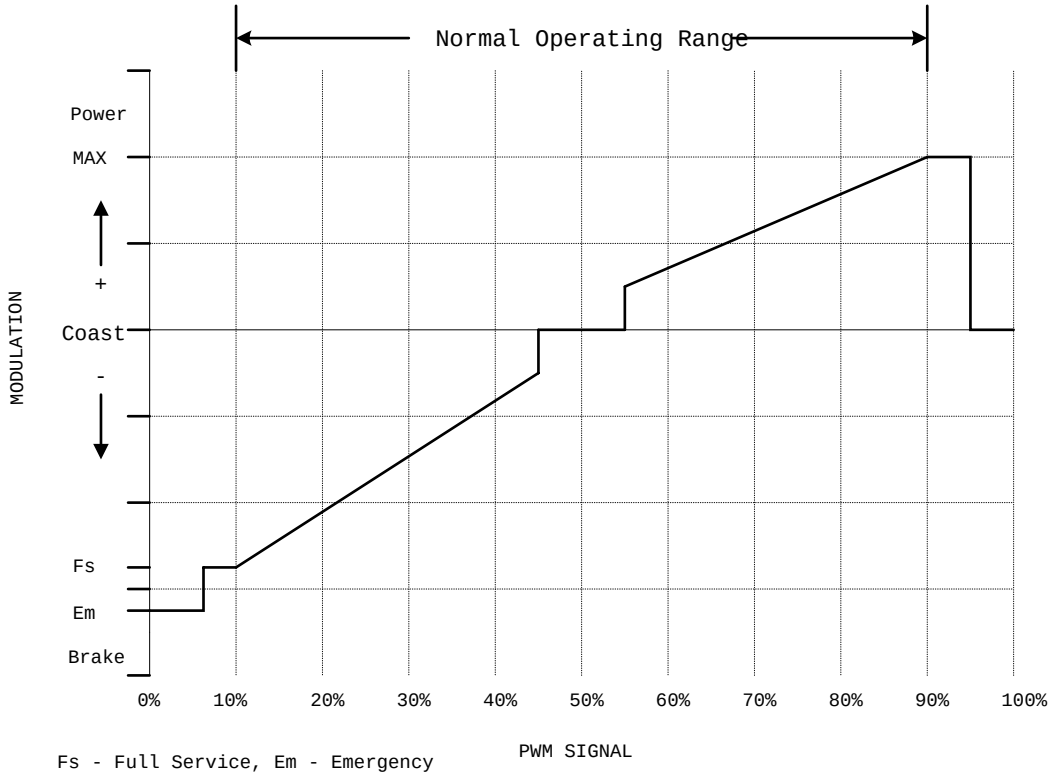

Figure 2—Control of power or brake by pulse-width-modulation (PWM)

5.4.1 Power modulation interfaces

Table 6 lists the signal origins, destinations, and characterization for the interfaces for the control of propulsion power modulation.

Table 6—Interfaces for the control of propulsion power modulation

Interfaces	Signal origin(s)	Signal destination(s)	Signal characterization
Type I interfaces: Levels of acceleration and power	Master control	Propulsion system	Presence of control battery voltage = “1” Absence of control battery voltage = “0”
Type II interfaces: Levels of acceleration, power, and/or speed	Master control	Propulsion system	Presence of control battery voltage = “1” Absence of control battery voltage = “0” PWM modulation trainline
Type III interfaces: Levels of acceleration, power, and/or speed	Master control	Propulsion system	Serial communications trainline

NOTE—The desired initial acceleration rate is usually expressed as a nominal rate based upon level tangent track and the design-specified passenger load. The actual tractive effort applied is based upon the desired acceleration rate and the load weigh system described in 5.6.

Copyright © 1999 IEEE. All rights reserved.
and Electronics Engineers, Inc.
IEEE
nitted without license from IHS
Not for Resale

5.4.1.1 Type I interfaces

Power modulation on Type I interfaces shall be achieved by selection of discrete levels of acceleration and power

5.4.1.1.1 Interfaces

Levels of acceleration and power available to master control shall be selected from the following list:

NOTE—Although modern terminology (i.e., “Power 1,” “Power 2,” etc.) is increasingly used, these levels typically correspond to the classic motor connections of dc-motored switched-resistor propulsion systems, and the older terminology is acceptable for Type I interfaces.

a) Power 1 (P1) Switch
b) Power 2 (P2) Series full field
c) Power 3 (P3) Series weak field (optional)
d) Power 4 (P4) Parallel full field (optional)
e) Power 5 (P5) Parallel intermediate field (optional)
f) Power 6 (P6) Parallel weak field

Higher levels selected shall provide normal (high) initial acceleration rate; however, if more than one additional level of propulsion initial acceleration rate is available to master control, they shall be the following:

— Low rate
— High rate

The master controller detents specified in 5.3.1 shall correspond to the selected levels of power. Low rate, if utilized, may be provided when master control selects power positions less than the maximum (typically, P2 and P3; occasionally P4 as well), or may be provided by a separate toggle switch activating the trainline available to master control.

5.4.1.1.2 Signal origin(s)

The signal origin shall be the master control.

5.4.1.1.3 Signal destination(s)

The signal destination shall be the propulsion system.

5.4.1.1.4 Signal characterization(s)

All signals shall be trainlined to allow all vehicles to respond simultaneously.

— Presence of control battery voltage = “1”
— Absence of control battery voltage = “0”

The following trainlines shall be provided, consistent with the interface functions listed above:

a) Forward
b) Reverse
c) Coast-brake (see 5.3.2.1.4)
d) Power-coast
e) Power 2 (P2) Full series
f) Power 3 (P3) Series weak field (optional)

Copyright © 1999 IEEE. All rights reserved.

and Electronics Engineers, Inc.
IEEE
nitted without license from IHS
Not for Resale

g) Power 4 (P4) Full parallel (optional)
h) Power 5 (P5) Parallel intermediate field (optional)
i) Power 6 (P6) Parallel weak field
j) Rate Control (optional): 0 = Low; 1 = High

Except as noted above, a “1” state is needed to command the mode described.

To achieve the application of propulsion tractive effort at the lowest power level [Power 1 (P1) Switch], energization of the following trainline wires to a defined “1” state shall be required:

— Forward/reverse
— Power-coast
— Coast-brake

Higher tractive effort and power characteristics shall be commanded by progressively energizing additional digital, battery voltage wires.

In the event of a fault (invalid combination) the system shall respond as follows:

— Default to lowest valid combination (recommended), or
— Default to coast (no power) (acceptable)

The choice of default shall be agreed between the authority having jurisdiction and the supplier.

5.4.1.2 Type II interfaces

Power modulation on Type II interfaces shall be continuously variable from the lowest level of initial acceleration rate, power, and/or speed to the highest. The modulation means shall be shared with braking, as described in 5.4.2.2.

5.4.1.2.1 Interfaces

The levels of propulsion initial acceleration rate, power, and/or speed available to master control shall be the following:

a) Minimum acceleration rate, power, and/or speed
b) A continuously variable region
c) Maximum acceleration rate, power, and/or speed

NOTE—The minimum acceleration rate, power, and/or speed position shall be equivalent to the Power 1 (P1)—Switch—position described in 5.4.1.1.1.

Master controller detents shall, at a minimum, be provided at positions a) and c).

Modulation shall be achieved by use of dedicated two-conductor, shielded trainline wires carrying a pulse-width-modulated (PWM) signal as shown in Figure 1 and Figure 2.

5.4.1.2.2 Signal origin(s)

The signal origin shall be the master control.

5.4.1.2.3 Signal destination(s)

The signal destination shall be the propulsion system.

Copyright © 1999 IEEE. All rights reserved.
and Electronics Engineers, Inc.
IEEE
nitted without license from IHS
Not for Resale

5.4.1.2.4 Signal characterization

All signals shall be trainlined to allow all vehicles to respond simultaneously.

— Presence of control battery voltage = “1”
— Absence of control battery voltage = “0”

The following trainlines shall be provided, consistent with the interface functions listed above:

a) Forward
b) Reverse
c) Power-coast (not required if the modulation trainline signal is purely a speed command)
d) Coast-brake (not required if the modulation trainline signal is purely a speed command)
e) The PWM modulation trainline as described above

The transition from coast mode to power mode shall occur concurrently with a PWM duty cycle of 55 ± 2%. Full acceleration rate and power shall be commanded at a PWM duty cycle of 90 ± 2%. Further increases in PWM duty cycle shall not result in additional acceleration rate or power. A PWM duty cycle above 95% shall result in a fault condition.

The PWM modulation trainline shall control simultaneously the initial acceleration rate, power, and/or speed envelope. See Annex C for recommendations on propulsion system response to the command.

5.4.1.3 Type III interfaces

Power modulation on Type III interfaces shall be variable from the lowest level of initial acceleration rate, power, and/or speed to the highest. The modulation means shall be shared with braking, as described in 5.4.2.3. In contrast with Type II interfaces, control of the modulation level shall be by means of a serial communications data bus.

5.4.1.3.1 Interfaces

Type III interface shall be the same as a Type II interface except that modulation shall be achieved by use of a serial communications data bus meeting the requirements of IEEE Std 1473-1999.

5.4.1.3.2 Signal origin(s)

The signal origin shall be the master control.

5.4.1.3.3 Signal destination(s)

The signal destination shall be the propulsion system.

5.4.1.3.4 Signal characterization

The serial communications trainline shall have 50 ms or less transport time. Eight bits of data shall be utilized for the full range of braking and motoring tractive effort. Decimal 126–129 shall be the coast steps. Decimal values above 129 shall be power.

5.4.2 Independent brake modulation interfaces

Table 7 lists the signal origins, destinations, and characterization for the interfaces for the control of independent brake modulation.

Copyright © 1999 IEEE. All rights reserved.

and Electronics Engineers, Inc.
IEEE
itted without license from IHS
Not for Resale

Table 7—Interfaces for the control of independent brake modulation

Interfaces	Signal origin(s)	Signal destination(s)	Signal characterization
Type I interfaces: Levels of deceleration rate	Master control	Propulsion and friction brake	Presence of control battery voltage = “1” Absence of control battery voltage = “0”
Type II interfaces: Levels of deceleration rate	Master control	Propulsion and friction brake	Presence of control battery voltage = “1” Absence of control battery voltage = “0” PWM modulation trainline
Type III interfaces: Levels of deceleration rate	Master control	Propulsion and friction brake	Serial communications trainline

5.4.2.1 Type I interfaces

5.4.2.1.1 Interfaces

Control of deceleration rate shall be achieved by the choice of one of the following:

a) Seven-step electric control of an electropneumatic or an all-electric braking system. Each braking step shall be detented on the master controller.
b) Application and release trainline wires as an overlay to the modulation of a pneumatic brake pipe or straight air pipe pressure. Minimum service brake, maximum service brake, and emergency brake shall be detented on the master controller.

5.4.2.1.2 Signal origin(s)

The signal origin shall be the master control.

5.4.2.1.3 Signal destination(s)

The signal destinations shall be the propulsion system and the friction brake system.

5.4.2.1.4 Signal characterization

All signals shall be trainlined to allow all vehicles to respond simultaneously. Depending on the interface approach chosen, the trainline signals shall be characterized as follows:

a) A seven-step control shall use three battery voltage trainline wires, with presence of battery voltage indicating a “1” and absence of battery voltage indicating a “0.” All wires energized to a “1” state shall indicate coast (brakes released), and a separate coast-brake trainline wire shall not be required. All wires deenergized to a “0” state shall result in maximum deceleration rate.

   NOTE—The authority having jurisdiction must specify if the maximum deceleration is full service brake or an equivalent brake cylinder pressure to the emergency brake.

b) Application (A) and release (R) overlay to modulate brake pipe pressure or straight air pipe pressure, as shown in Table 8.

Copyright © 1999 IEEE. All rights reserved.
and Electronics Engineers, Inc.
IEEE
nitted without license from IHS
Not for Resale

Table 8—Application and release trainline overlay control of friction brake

State	A	R
Apply	1	0
Release	0	1
Lap	0	0
Apply[a]	1	1

[a]A fault condition

5.4.2.2 Type II interfaces

Deceleration rate modulation on Type II interfaces shall be continuously variable from the lowest level of initial deceleration rate to the highest. The modulation means shall be shared with propulsion motoring, as described in 5.4.1.2.

5.4.2.2.1 Interfaces

The levels of deceleration rate available to the master control shall be the following:

a) Minimum brake
b) A continuously variable region
c) Maximum service brake
d) Emergency brake

Master controller detents shall, at a minimum, be provided at position a), c), and d).

Modulation shall be achieved by use of a dedicated trainline wire carrying a PWM signal as shown in Figures 1 and 2. If required by the electric braking design of the propulsion system, coast may be a low level of electric brake, which shall not exceed 0.22 m/sec^2 (0.1 m/h/s) above that resulting from natural friction, windage, and grade effects.

5.4.2.2.2 Signal origin(s)

The signal origin shall be the master control.

5.4.2.2.3 Signal destination(s)

The signal destinations shall be the propulsion system and the friction brake system, however, it shall be acceptable for the destination only to be the propulsion system, which shall optionally provide a controlling signal to the friction brakes as described in 5.4.3.

5.4.2.2.4 Signal characterization

All signals shall be trainlined to allow all vehicles to respond simultaneously.

— Presence of control battery voltage = “1”
— Absence of control battery voltage = “0”

The following trainlines shall be provided, consistent with the interface functions listed in 5.3.2.1.1:

a) Power-coast

Copyright © 1999 IEEE. All rights reserved.

and Electronics Engineers, Inc.
IEEE
nitted without license from IHS
Not for Resale

b) Coast-brake
c) The PWM modulation trainline as described above

The transition from coast to brake shall occur concurrently with a PWM duty cycle of 45 ± 2% which is the minimum deceleration rate. Maximum deceleration rate shall be commanded at a PWM duty cycle of 10 ± 2%. A duty cycle of less than 7% shall be considered as a fault condition.

5.4.2.3 Type III interfaces

Braking effort modulation on Type III interfaces shall be continuously variable from the lowest level of initial deceleration rate to the highest. The modulation means shall be shared with propulsion motoring, as described in 5.4.1.3. In contrast with Type II interfaces, control of the modulation level shall be by means of a serial communications data bus.

5.4.2.3.1 Interfaces

Type III interface shall be the same as a Type II interface except that modulation shall be achieved by use of a serial communications data bus meeting the requirements of IEEE Std 1473-1999. If required by the electric braking design of the propulsion system, coast may be a low level of electric brake, which shall not exceed 0.22 m/s^2 (0.1 m/h/s) above that resulting from natural friction, windage, and grade effects.

5.4.2.3.2 Signal origin(s)

The signal origin shall be the master control.

5.4.2.3.3 Signal destination(s)

The signal destinations shall be the propulsion system and the friction brake system.

5.4.2.3.4 Signal characterization

The serial communications trainline shall be 50 ms or less transport time. Eight bits of data shall be utilized for the full range of braking and motoring tractive effort. Decimal values of 126–129 shall be the coast steps. Decimal values below 126 shall be brake.

5.4.3 Integrated friction brake modulation interfaces

Optionally, the propulsion system on each vehicle may, as described in 5.4.2.2.3, be the sole destination of brake modulation signals. If the vehicle is so configured, the following signal characterizations shall be utilized:

a) Brake command signal (desired brake cylinder pressure)
   1) Type: Analog current loop
   2) Scaling: 4 to 20 ma
   3) Resolution: ±2%
   4) Configuration: 2 conductors with shield
   5) Characteristics:
      i) <4 ma = full scale bar (psig)
      ii) 4 ma = full scale bar (psig)
      iii) 4 ma to 20 ma = proportional brake cylinder pressure [bar (psig)]
      iv) 0 ma = full scale bar (psig)
      v) >20 ma = 0 bar (psig) (fault condition)
b) Brake cylinder pressure feedback
   1) Type: Analog voltage

Copyright © 1999 IEEE. All rights reserved.
and Electronics Engineers, Inc.
IEEE
nitted without license from IHS
Not for Resale

2) Scaling: X to Y volts
3) Resolution: ±2%
4) Configuration: 2 conductor with shield
5) Power input: Provided by propulsion
6) Characteristics:
   i) <X volts = 0 bar (psig) (fault condition)
   ii) X volts = 0 bar (psig)
   iii) X volts to Y volts = proportional brake cylinder pressure [bar (psig)]
   iv) Y volts = full scale bar (psig)
   v) >Y volts = 0 bar (psig) (fault condition)

5.5 Blending

Virtually all electrically propelled rail transit vehicles are equipped with propulsion systems with electric (dynamic) braking capability. Either the electric braking system or the friction braking system can be the controlling system with responsibility for providing the blending function.

If the electric brake is used during panic braking or emergency braking, the electric brake feedback signal shall not be used in determining the friction brake effort.

Table 9 lists the signal origins, destinations, and characterization for the interfaces for the control of blending.

Table 9—Interfaces for blending control

Interfaces	Signal origin(s)	Signal destination(s)	Signal characterization
Type I interfaces: Feedback to friction brake of the electric (dynamic) braking level, or command to friction brake of the required friction braking effort	Propulsion system	Friction brake system	Proportional signal Fade anticipation signal (optional)
Type II interfaces: Same as Type I interfaces			
Type III interfaces: Feedback to friction brake of the electric (dynamic) braking level, or command to friction brake of the required friction braking effort	Propulsion system	Friction brake system	Serial communication

5.5.1 Type I interfaces

5.5.1.1 Interfaces

The feedback interface shall be a PWM signal as described in Figure 1, except that the signal shall be proportional to the level of electric brake as shown in Figure 3.

In addition, for the purpose of fade anticipation, there may optionally be a digital, battery voltage signal provided by the propulsion system to the friction brake system indicating that the level of electric (dynamic)

Copyright © 1999 IEEE. All rights reserved.

and Electronics Engineers, Inc.
IEEE
nitted without license from IHS
Not for Resale

brake is about to fade. Such a signal, if used, shall be utilized at low speed as an anticipation signal to allow the friction brake time to respond and provide a smooth final stop. A “0” state indicates dynamic brake fading; a “1” signal indicates dynamic brake at normal levels.

NOTE—In some very simple interfaces, this signal has historically been the only feedback and was referred to as a “lockout” signal.

5.5.1.2 Signal origin(s)

The signal origin shall be the propulsion system.

5.5.1.3 Signal destination(s)

The signal destination shall be the friction brake system.

5.5.1.4 Signal characterization

The transfer characteristics of the feedback shall be as described in Figure 3.

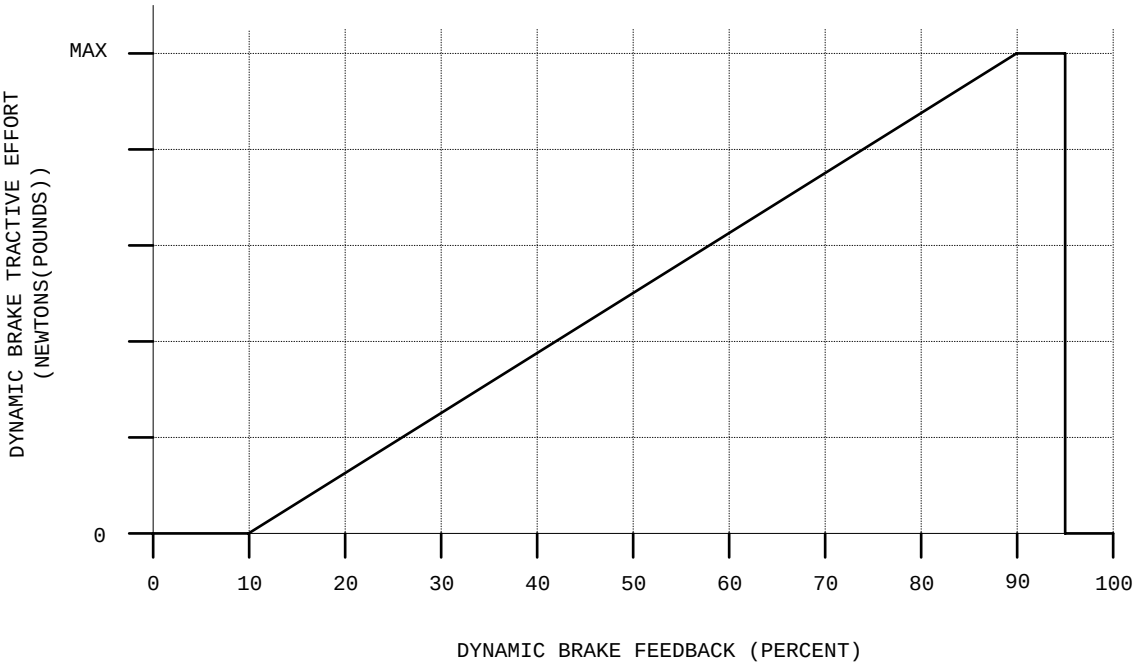

Figure 3—Electric brake feedback characteristics

5.5.2 Type II interfaces

Type II interfaces shall be identical to Type I interfaces.

5.5.3 Type III interfaces

5.5.3.1 Interfaces

The Type III feedback interface shall be by serial communications bus meeting the requirements of IEEE Std 1473-1999.

Copyright © 1999 IEEE. All rights reserved.
and Electronics Engineers, Inc.
IEEE
itted without license from IHS
Not for Resale

5.5.3.2 Signal origin(s)

The signal origin shall be the propulsion system.

5.5.3.3 Signal destination(s)

The signal destination shall be the friction brake system.

5.5.3.4 Signal characterization

The serial communications bus shall have a transport time of 20 ms or less. Eight bits of data shall be utilized to represent electric (dynamic) brake effort. This interface shall take one of two forms. The first (a) is used when friction brake has primary blending responsibility. The second (b) is used if propulsion has primary blending responsibility.

a) Feedback from the propulsion system to the friction braking system.

Value	Represents
0–7	Fault state—Taken as zero (0) braking effort
7–27	Zero (0) braking effort
28–227	Variable amounts of electric braking effort
228–248	Maximum electric braking effort
249–255	Fault state—Taken as zero (0) braking effort

b) A command to the friction brake system requesting the amount of friction brake required to either supplement or replace the electric braking effort, as determined by propulsion. Where this form is chosen, the command word shall be identical to that used for brake modulation, as described in 5.4.2.3.

5.6 Load weigh

The load weigh system provides a signal that indicates the passenger load. There is a direct correlation between the passenger load ([i. e., weight) and the value of the interface signal provided. A base signal is defined for the empty weight of the vehicle and the maximum signal that is defined for the crush loaded weight of the vehicle. This signal range from empty to loaded is utilized to adjust the positive and negative tractive effort required to meet the acceleration or deceleration rate specified by the control trainlines.

WARNING!

Certain systems may use load weigh as part of functions, such as safe stopping distance, which require safety critical design considerations.

NOTE—The standard is written considering an air pressure suspension system. Equivalent signals from other suspension systems could be used.

Copyright © 1999 IEEE. All rights reserved.

and Electronics Engineers, Inc.
IEEE
itted without license from IHS
Not for Resale

5.6.1 Type I interfaces

5.6.1.1 Interfaces

A signal shall be provided that is proportional to secondary suspension deflection or pressure.

Either a three-point or a four-point suspension shall be used; three-point is preferred. Pressure shall be sensed at the location of the single leveling valve if a three-point suspension is used.

5.6.1.2 Signal origin(s)

The origin of the load weigh signal shall be the suspension system, using a sensor or transducer supplied as part of either the friction brake system or the propulsion system.

5.6.1.3 Signal destination(s)

The signal destinations shall be the friction brake system and the propulsion system.

5.6.1.4 Signal characterization

The load weigh signal shall be transmitted in volts per bar (psig) or milliamperes per bar (psig) or directly as pressure in bar (psig). The signal accuracy shall be plus or minus 0.07 bar (1 psig) of actual pressure.

The load weigh signal shall be truncated such that propulsion and friction brake systems perform the calculations to a value that will provide for a smooth transition between propulsion electric braking and the friction brake.

The signal originator shall latch the load weigh signal so that the same value is used by the propulsion and friction brake system. The use of two latch values is recommended. The first latch value shall be established when the positive traction command is initiated. This initial value shall be used to establish the positive tractive effort. A second value may be utilized after the vehicle has reached a specified speed for further calculations of the positive and negative tractive effort.

NOTE—The friction brake equipment may use an instantaneous value of the load weigh signal for the emergency brake tractive effort level.

If a tilt system is provided as part of the vehicle, neither shall the pressure used for the tilt system be used as a load weigh nor shall the tilt system pressure affect the output of the load weigh system.

5.6.2 Type II interfaces

Type II interfaces shall be the same as Type I interfaces.

5.6.3 Type III interfaces

The Type III interface shall be the same as a Type I interface, except that a serial communications local data bus meeting the requirements of IEEE Std 1473-1999 shall be used, with a resolution of 5 b/bar (1 b per psig). Transport time shall be 250 ms or less.

5.7 Speed

Table 10 lists the signal origins, destinations, and characterization for the interfaces for speed signals.

Copyright © 1999 IEEE. All rights reserved.
and Electronics Engineers, Inc.
IEEE
itted without license from IHS
Not for Resale

Table 10—Speed signal interfaces

Interfaces	Signal origin(s)	Signal destination(s)	Signal characterization
Type I interfaces: Speed information, with or without wheel diameter compensation	Propulsion system, friction brake system, or ground speed sensor system	a) Friction brake or propulsion b) Spin-slide (if applicable) c) Master control (annunciation) d) Master control (speed control) e) Door control	a) Filtered pulses, uncompensated b) Unfiltered pulses, uncompensated c) Analog voltage, compensated d) Unfiltered pulses, uncompensated e) Unfiltered pulses, uncompensated
Type II interfaces: Speed information, with or without wheel diameter compensation	Propulsion system, friction brake system, or ground speed sensor system	a) Friction brake or propulsion b) Spin-slide (if applicable) c) Master control (annunciation) d) Master control (speed control) e) Door control f) Passenger information system (if utilized)	a) Filtered pulses, uncompensated b) Unfiltered pulses, uncompensated c) Analog voltage, compensated d) Unfiltered pulses, uncompensated e) Unfiltered pulses, uncompensated f) Analog voltage, compensated
Type III interfaces: Speed information, with or without wheel diameter compensation	Propulsion system, friction brake system, or ground speed sensor system	a) Friction brake or propulsion b) Spin-slide (if applicable) c) Master control (annunciation) d) Master control (speed control) e) Door control	a) Filtered pulses, uncompensated b) Unfiltered pulses, uncompensated c) Analog voltage, compensated d) Unfiltered pulses, uncompensated e) Unfiltered pulses, uncompensated

NOTE—Where speed information is shared among multiple systems, the system providing the speed information system shall define the potential effect on other systems connected to the signal source of the diagnostics utilized.

5.7.1 Type I interfaces

5.7.1.1 Interfaces

The means to transmit vehicle speed information shall be provided. The speed signals shall take one of the following three forms, consistent with the requirements of the signal origin and signal destination:

a) Transformer coupled or optically coupled pulses, unfiltered, from axle or motor rotation-sensing speed sensors.
b) Shaped pulses, filtered, synchronously derived from the speed sensor.
c) Voltage proportional to speed, with or without wheel diameter compensation.

In cases where speed information is transmitted among multiple suppliers and among multiple pieces of equipment by a single supplier, the speed signal(s) shall be sufficiently isolated or buffered to prevent faults and conditions external to the source equipment from affecting the source equipment itself and its internal use of the signal.

5.7.1.2 Signal origin(s)

The signal origin may be one or more speed sensors per axle, as required by the design of the system(s) using the signals. The sensors may be mounted on the end of the axle, as part of a bearing housing, in the gear unit or on the motor. There may optionally also be a ground speed sensor.

5.7.1.3 Signal destination(s)

Signal destinations shall be:

a) Friction brake system or propulsion system
b) Spin-slide system (if applicable)

Copyright © 1999 IEEE. All rights reserved.

and Electronics Engineers, Inc.
IEEE
nitted without license from IHS
Not for Resale

c) Master control annunciation
d) Master control speed control system
e) Door control system

5.7.1.4 Signal characterization

The speed signals shall be pulses or analog voltages proportional to wheel speed. There may optionally also be an analog voltage signal derived from a ground speed sensor.

The speed signals shall indicate speed down to at least 1.6 km/h (1.0 m/h), unless otherwise agreed to, but in no case more than 4.8 km/h (3.0 m/h). The speed signal shall indicate speed up to at least the limit specified by the customer or 20% above the maximum vehicle design speed, whichever is greater. Where speed sensing is dependent upon wheel diameter, the worst cases of wheel diameter shall be used in determining the range of unprocessed speed signal validity.

Exclusive of wheel diameter considerations, speed signal accuracy shall be within ±1.6 km/h (1.0 m/h).

For analog voltage signals, the units of the signal shall be according to the preference of the customer. Voltage signals shall be scaled such that 0.1 V equals 1.0 unit speed. Speed signal resolution shall be at least 0.1 unit speed. If used, ground speed sensors shall have a resolution of at least 1.0 unit speed.

Filtering shall be provided to keep the analog voltage speed signal within 0.1 unit of its average value, exclusive of the effects of wheel slip. Where multiple speed sensors are used, the signal supplier shall also provide a speed signal that results from the mixing of the independently filtered signals, in order to negate variations resulting from wheel slip.

Analog speed signals shall be compensated for wheel diameter variations to the nearest 6.4 mm (0.25 in) of reference wheel diameter. If an uncompensated signal is required, it shall be separately provided in addition to the compensated signal.

In addition to the above requirements, the supplier of the speed signal(s) shall fully characterize the parameters necessary for the proper use of the speed signal(s). This shall include, but not be limited to, definitions of allowable load, pulse voltage and waveform as a function of speed and load, pulse rate (i.e., Hz/km/h or r/m), filter characteristics, wheel diameter compensation operation and ground reference limitations. Users of the speed signals shall consider all of these factors in their system design.

5.7.2 Type II interfaces

The speed signal Type II interface shall be the same as a Type I interface, except that where the speed signal arrangement allows the determination of vehicle direction, such information shall be furnished. Direction information shall be provided either in digital form (forward/reverse) or as uncompensated phased pulses as generated by the tachometer.

5.7.3 Type III interfaces

The speed signal Type III interface shall be the same as a Type II interface, except that analog information shall be transmitted over a serial communications bus meeting the requirements of IEEE Std 1473-1999 and that digitized signals shall be scaled so that a value of “1” equals 0.1 unit speed, with transport time of 100 ms or less.

5.8 Penalty brake

NOTE—If this function is provided completely within master control, this subclause (in its entirety) is not applicable.

Copyright © 1999 IEEE. All rights reserved.
and Electronics Engineers, Inc.
IEEE
nitted without license from IHS
Not for Resale

5.8.1 Interfaces

The interfaces for the penalty brake shall be Type I to meet the safety critical requirements. The interface shall be separate signals for initiation of a penalty brake application resulting from a penalty condition detected by the master control system.

5.8.2 Signal origin(s)

The signal origin shall be the automatic train protection function of the master control system.

5.8.3 Signal destination(s)

The signal destinations shall be the friction brake system and/or propulsion system for initiating the requested penalty brake.

5.8.4 Signal characterization

Penalty brake application shall be achieved in a fail-safe manner.

NOTE—It is recommended that the penalty brake application use a dedicated signal and return; accordingly, the signal is herein referred to as a *control voltage* signal.

— Presence of control voltage = “1”: No penalty
— Absence of control voltage = “0”: Penalty brake request

5.8.5 Suppression

In order to avoid unwanted and unnecessary penalty brake applications resulting from the normal response time characteristics of the friction brake or electric brake systems, the master control or friction brake control shall sense that a brake application has been initiated in response to recognition of the penalty condition (e.g., overspeed). Having sensed such brake application, master control or friction brake control shall suppress initiation of a penalty brake application for a period of time sufficient to allow, under normal circumstances, the correction of the penalty condition. If, however, the penalty condition persists not withstanding a brake application, a penalty brake application shall be initiated.

5.9 Spin/slide

Table 11 lists the signal origins, destinations, and characterization for the interfaces for the detection and correction of wheel spins and slides.

NOTE—This subclause is written on the basis of the spin/slide system being a separate functional system.

5.9.1 Type I interfaces

5.9.1.1 Interfaces

Unfiltered speed sensor pulses from each axle shall be fed to the spin/slide system as described in 5.7. The spin/slide system shall determine the presence or absence of a slip condition and provide the appropriate signal to the propulsion or friction brake system. If the spin/slide system is integrated with the propulsion or friction braking system, other corrective action signals may be utilized within the respective system to enhance performance. Slide correction may be disabled in case of an emergency brake application.

,,`,,`,`,,`---
and Electronics Engineers, Inc.
IEEE
nitted without license from IHS
Copyright © 1999 IEEE. All rights reserved.
Not for Resale

Table 11—Spin/slide detection/correction interfaces

Interfaces	Signal origin(s)	Signal destination(s)	Signal characterization
Type I interfaces: Removal of power or brake to correct spin or slide condition	Spin/slide	Propulsion and friction brake	Spin correction per vehicle; slide correction per truck; "0" = no correction; "1" = correction; safety-critical timing
Type II interfaces: Removal of power or brake to correct spin or slide condition	Spin/slide	Propulsion and friction brake	Spin correction per vehicle or per truck; slide correction per truck or per axle; "0" = no correction; "1" = correction; safety-critical timing
Type III interfaces: Removal of power or brake to correct spin or slide condition	Spin/slide	Propulsion and friction brake	Spin and slide correction per truck or per axle; "0" = no correction; "1" = correction; safety-critical timing

5.9.1.2 Signal origin(s)

The origin of the slip correction signal shall be the spin/slide system.

5.9.1.3 Signal destination(s)

The destination of the slip correction signal shall be the propulsion and the friction brake system.

5.9.1.4 Signal characterization

Correction signals shall be local, battery voltage. A "0" state shall indicate normal operation. A "1" state shall indicate a command to take corrective action. Correction of a spin shall be on a per-vehicle basis. Correction of a slide shall be on a per-truck basis. There shall be provided a safety-critical timing function which prevents a "1" signal from being sent to the friction brake system for a time longer than required to correct a slide. This timer shall reset at each "0" so that it does not "time out" under poor adhesion conditions.

5.9.2 Type II interfaces

The interfaces, signal origins, signal destinations, and signal characterizations for spin/slide on Type II interfaces shall be the same as for Type I interfaces, with the following exceptions:

a) Spin correction may be either on a per-vehicle or a per-truck basis, depending on the design of the propulsion system.

b) Slide correction may be either on a per-truck, a per-axle, or a per-wheel basis, depending on the design of the propulsion and friction brake systems or the vehicle.

c) Friction brake correction may optionally use a more complex interface signal consistent with the use of a proportional application/lap/release valve rather than an "on-off" valve. Either one of two alternative forms may be used:

Copyright © 1999 IEEE. All rights reserved.
and Electronics Engineers, Inc.
IEEE
nitted without license from IHS
Not for Resale

1) A “lapping” dump valve; such a valve typically consists of a “lap (L)” solenoid valve portion (three-way valve) and a “release (R)” solenoid valve portion (two-way valve). The signal characteristics for such a valve shall be as shown in Table 12.

Table 12—Interfaces for a “lapping”-type modulating dump valve

L	R	State
0	0	Application (no slide)
0	1	Release (slide correction underway)
1	1	Lap; neither apply nor release brakes
1	0	Fault; design shall preclude this from occurring

2) An arrangement consisting of an application valve portion (two-way valve) and a release valve portion (two-way valve). The signal characteristics for such a valve shall be as shown in Table 13.

Table 13—Interfaces for a two-portion modulating dump valve

A	R	State
0	0	Application (no slide)
1	0	Lap; neither apply nor release brakes
1	1	Release (slide correction underway)
0	1	Fault; design shall preclude this from occurring

5.9.3 Type III interfaces

The interfaces, signal origins, signal destinations, and signal characterizations for spin/slide on Type III interfaces shall be the same as for Type II interfaces, with the following exceptions:

a) Spin correction may be on a per-truck or a per-axle basis.
b) Friction brake correction may be communicated over a dedicated local serial communications bus link per IEEE Std 1473-1999. Transport time shall be 20 ms or less.
c) Both the propulsion and the friction brake may contain slip detection systems, which may operate in parallel.

NOTE—If both propulsion and friction brake provide slip detection, their respective actions must be coordinated appropriately to ensure the absence of unwanted or unsafe interaction.

5.10 No-motion detection

The no-motion detection may be performed within the master control, propulsion, friction brake, door control, or spin/slide system.

Copyright © 1999 IEEE. All rights reserved.

and Electronics Engineers, Inc.
IEEE
nitted without license from IHS
Not for Resale

Table 14 lists the signal origins, destinations, and characterization for the interfaces no-motion detection.

Table 14—Interfaces for no-motion detection

Interfaces	Signal origin(s)	Signal destination(s)	Signal characterization
Type I interfaces: Signal that the train is at or below the no motion threshold.	No-motion system	Door control system; optionally, master control system	"0" = motion "1" = motion
Type II interfaces: Same as Type I interfaces			
Type III interfaces: Signal that the train is at or below the no motion threshold	No motion system	Door control system; optionally, master control system	One bit, redundant

5.10.1 Interfaces

The no-motion system shall detect that the train has slowed below a threshold speed. There shall be hysteresis such that a speed greater than this threshold speed must be attained in order to remove the no-motion signals. This detection shall be done in a safety-critical fashion. The safety-critical interface function of a no-motion system shall be validated by conducting a formal analysis (e.g., fault tree analysis). Upon detection of no motion, a signal shall be generated that may be used as authorization to respond to a command to open the doors, or for such other functions as may be required. The no-motion subsystem shall use unfiltered speed sensor pulses as described in 5.7.

5.10.2 Signal origin(s)

The signal origin shall be the no-motion system.

5.10.3 Signal destination(s)

The signal destination shall be the door control system. If the no-motion system is not within the master control system, then optionally the master control system shall also be a destination.

5.10.4 Signal characterization

For Type I and Type II interfaces, the signal shall be derived from a circuit in which the de-energized state indicates motion and the energized state indicates no motion. For Type III interfaces using serial communications, one bit of data with transport time of 250 ms or less may be used.

5.11 Alertness monitoring

5.11.1 Interfaces

The alertness of the human operator shall be continuously monitored. A manual deadman device built into the manual master controller may be provided, or, alternatively or in addition, an alertness device or system requiring the operator to respond or move in specified fashions. Failure of the operator to maintain the deadman device in the operative position or to respond appropriately to the alertness device shall cause a full service brake or emergency brake application.

Copyright © 1999 IEEE. All rights reserved.
and Electronics Engineers, Inc.
IEEE
nitted without license from IHS
Not for Resale

5.11.2 Signal origin(s)

The signal origin shall be the human operator, directly or through the deadman or alertness device.

5.11.3 Signal destination(s)

The signal destination shall be the master control system.

5.11.4 Signal characterization

Proper response of the operator shall result in a “1” signal, either through a battery voltage wire for Type I or Type II interfaces, or a single bit for serial communication. If serial communication is used for a Type III interface, transport time shall be 50 ms or less.

5.12 Specialized brake functions

The interfaces for specialized brake functions shall be as shown in Table 15.

NOTE—The functions described herein are optional.

Table 15—Interfaces for specialized brake functions

Interfaces	Signal origin(s)	Signal destination(s)	Signal characterization
Type I interfaces: a) Track brake[a] b) Sanding[a] c) Snow brake[a]	a) Manual master control; automatic in emergency brake[a] b) Manual master control; automatic in emergency brake[a] c) Manual master control	a) Track brake actuators (contactors) b) Sanding valves c) Friction brake system	Presence of control battery voltage = “1”[b] Absence of control battery voltage = “0” A “1” state on the trainline wire shall be required to command the function described
Type II interfaces: Same as Type I interfaces			
Type III interfaces: Same as Type I interfaces except for track brake	Same as Type I interfaces	Same as Type I interfaces	Serial communications

[a]Optional
[b]Except as may be provided under 5.12.1.4.

5.12.1 Type I interfaces

5.12.1.1 Interfaces

The interfaces listed are optional; if utilized, they shall be as follows:

a) Track brake
b) Sanding—The application of sand shall be interlocked with zero speed. This interlocked function shall limit the amount of sand to be disposed to a specific time after the vehicle speed is less than the zero speed threshold.
c) Snow brake

Copyright © 1999 IEEE. All rights reserved.

and Electronics Engineers, Inc.
IEEE
nitted without license from IHS
Not for Resale

5.12.1.2 Signal origin(s)

The signal origins shall be as follows:

a) Track brake—Manual master control; automatic in emergency brake (optional at the discretion of the authority having jurisdiction)
b) Sanding—Manual master control; automatic in emergency brake; and may be requested by the wheel spin-slide system (optional at the discretion of the authority having jurisdiction)
c) Snow brake—Manual master control

5.12.1.3 Signal destination(s)

The signal destinations shall be as follows:

a) Track brake—Track brake actuators (contactors)
b) Sanding—Sanding valves
c) Snow brake—Friction brake system

5.12.1.4 Signal characterization

Presence of control battery voltage = “1”

Absence of control battery voltage = “0”

A “1” state on the trainline wire shall be required to command the function described, except for permanent magnet track brakes, which shall be commanded in accordance with the specifications of the purchaser.

A snow brake application shall not result in a “brakes applied” signal; means shall be provided to cycle periodically so that the slack adjuster may function.

5.12.2 Type II interfaces

Type II interfaces shall be the same as Type I interfaces.

5.12.3 Type III interfaces

If utilized, a serial communications bus meeting the requirements of IEEE Std 1473-1999, using one bit of data and with communication transport time no greater than 250 ms, shall communicate these functions. The track brake, which because of its utilization as part of the emergency brake system, shall remain controlled by a battery voltage “on-off” signal.

5.13 Specialized propulsion functions

The interfaces for specialized propulsion functions shall be as shown in Table 16.

NOTE—The functions described herein are optional.

Copyright © 1999 IEEE. All rights reserved.
and Electronics Engineers, Inc.
IEEE
nitted without license from IHS
Not for Resale

Table 16—Interfaces for specialized propulsion functions

Interfaces	Signal origin(s)	Signal destination(s)	Signal characterization
Type I interfaces: Electric brake cutout[a] Regenerative brake enable[a]	Master control system and/or local control	Propulsion system	Presence of control battery voltage = “1” Absence of control battery voltage = “0” A “1” state on the trainline wire shall be required to command the function described
Type II interfaces: Same as Type I interfaces			
Type III interfaces: Same as Type I interfaces	Same as Type I interfaces	Same as Type I interfaces	Serial communications

[a]Optional

5.13.1 Type I interfaces

5.13.1.1 Interfaces

Any or all of the following specialized propulsion functions may be provided:

a) Electric brake cutout (Optional if utilized by the purchaser, these interfaces shall be as described)
b) Regenerative brake enable (Optional if utilized by the purchaser, these interfaces shall be as described)

5.13.1.2 Signal origin(s)

For both of these functions, the signal origin shall be the master control system and/or local control.

5.13.1.3 Signal destination(s)

For both of these functions, the signal destination shall be the propulsion system.

5.13.1.4 Signal characterization

Presence of control battery voltage = “1”

Absence of control battery voltage = “0”

A “1” state on the trainline wire shall be required to command the function described.

5.13.2 Type II interfaces

Type II interfaces shall be the same as Type I interfaces.

--`,,`,`-`-`,,`,,`,`,,`---
Copyright © 1999 IEEE. All rights reserved.
and Electronics Engineers, Inc.
IEEE
itted without license from IHS
Not for Resale

5.13.3 Type III interfaces

If utilized, a serial communications bus meeting the requirements of IEEE Std 1473-1999, using one bit of data, and with communication transport time no greater than 250 ms shall communicate these functions:

a) 00—All electric brake cutout
b) 10—Fault; interpreted as all electric brake cutout
c) 01—Rheostatic dynamic braking enabled (but not regenerative)
d) 11—All electric braking enabled (rheostatic and regenerative)

5.14 Door status

A “doors open” signal shall be maintained until each door in the consist has achieved a closed and locked indication. The absence of this signal may be used to inhibit the brakes from being released and the propulsion system from providing positive tractive effort under certain conditions, which are dependent on the authority having jurisdiction.

Optionally, separate open/closed and locked/unlocked indications may be provided.

The safety critical interface function of the door status signals shall be validated by conducting a formal analysis (e.g., fault tree analysis).

A Type 1 interface exclusively shall be utilized for door status.

5.14.1 Interfaces

The interface signal indicates doors open or doors closed.

In the absence of differing authority-specific requirements, the following interface functionality shall be provided:

a) The ability of the brake-coast trainline to change state from “0” (brake) to “1” (coast) shall be inhibited unless a signal or signals indicating doors closed and locked is received.
b) Circuitry shall be arranged such that the master control system shall be calling for brake or coast, but not power, at the time the “doors closed and locked” signal or signals is received. If the master control system is calling for power at the time the signal is received, it shall be necessary for the master control system first to call again for brake for it to be possible then to release brakes.
c) Conversely, loss of the signal indicating doors closed and locked shall apply the service brakes.

5.14.2 Signal origin(s)

The origin of the signal shall be the door system

5.14.3 Signal destination(s)

The destination of the signal shall be the master control system, the friction brake system, and/or the propulsion system.

5.14.4 Signal characterization

A “0” shall indicate doors open or unlocked; a “1” shall indicate doors closed and locked.

Copyright © 1999 IEEE. All rights reserved.
and Electronics Engineers, Inc.
IEEE
nitted without license from IHS
Not for Resale

5.15 Data and fault annunciation

The interfaces for data and fault annunciation shall be as shown in Table 17.

Table 17—Interfaces for data and fault annunciation

Interfaces	Signal origin(s)	Signal destination(s)	Signal characterization
Type I interfaces: Events to be annunciated	Propulsion system Friction brake system Door system	Operator's cab	All signals shall be trainlined, except local overload if utilized.
Type II interfaces: (See IEEE P1482/D699)	(See IEEE P1482/D699)	(See IEEE P1482/D699)	(See IEEE P1482/D699)
Type III interfaces: (See IEEE P1482/D699)	(See IEEE P1482/D699)	(See IEEE P1482/D699)	(See IEEE P1482/D699)

5.15.1 Type I interfaces

5.15.1.1 Interfaces

The authority having jurisdiction shall choose the events to be annunciated from the following list:

a) Propulsion overload fault [trainlined and local (optional)]
b) No electric brake fault (optional)
c) Friction brakes released
d) Doors closed

A reset push button, active only in the active cab, shall be provided. It shall reset, simultaneously, all remotely resettable faults then present on all vehicles, but only if the vehicle is stopped at the time.

5.15.1.2 Signal origin(s)

The signal origins shall be the propulsion system, the friction brake system, and the door system.

5.15.1.3 Signal destination(s)

The signal destinations shall be the operator's cab.

5.15.1.4 Signal characterization

All signals shall be trainlined, except local overload if utilized. It is recommended that annunciators be active in all cabs.

A "1" state on the trainline wire shall be required to indicate the presence of a fault.

Annunciation shall be by light, LCD, LED, or similar bright display. If a light is used, it shall be of the "push to test" design.

Copyright © 1999 IEEE. All rights reserved.

and Electronics Engineers, Inc.
IEEE
itted without license from IHS
Not for Resale

5.15.2 Type II interfaces

Data and fault annunciation on Type II interfaces shall be in accordance with IEEE P1482/D699. The execution of data and fault annunciation thereby shall not adversely affect safety critical functions.

5.15.3 Type III interfaces

Data and fault annunciation on state-of-the-art complexity vehicles shall be in accordance with IEEE P1482/D699, utilizing serial communications as specified in IEEE Std 1473-1999 with data transmission repeated at least once every second. The execution of data and fault annunciation shall thereby not adversely affect safety-critical functions.

Copyright © 1999 IEEE. All rights reserved.
and Electronics Engineers, Inc.
IEEE
nitted without license from IHS
Not for Resale

Annex A

(informative)

Bibliography

[B1] IEEE Std 11-1980 (Reaff 1992), IEEE Standard for Rotating Electric Machinery for Rail and Road Vehicles.

[B2] *Urban Public Transportation Glossary,* Transportation Research Board, Washington, D.C., 1989.

[B3] *Webster's New Collegiate Dictionary,* Springfield, Mass.: Merriam-Webster, Inc.

--`,,`,`-`-`,,`,,`,`,,`---

Copyright © 1999 IEEE. All rights reserved.

and Electronics Engineers, Inc.
IEEE
nitted without license from IHS

Not for Resale

Annex B

(informative)

Example block diagrams for the three interface types

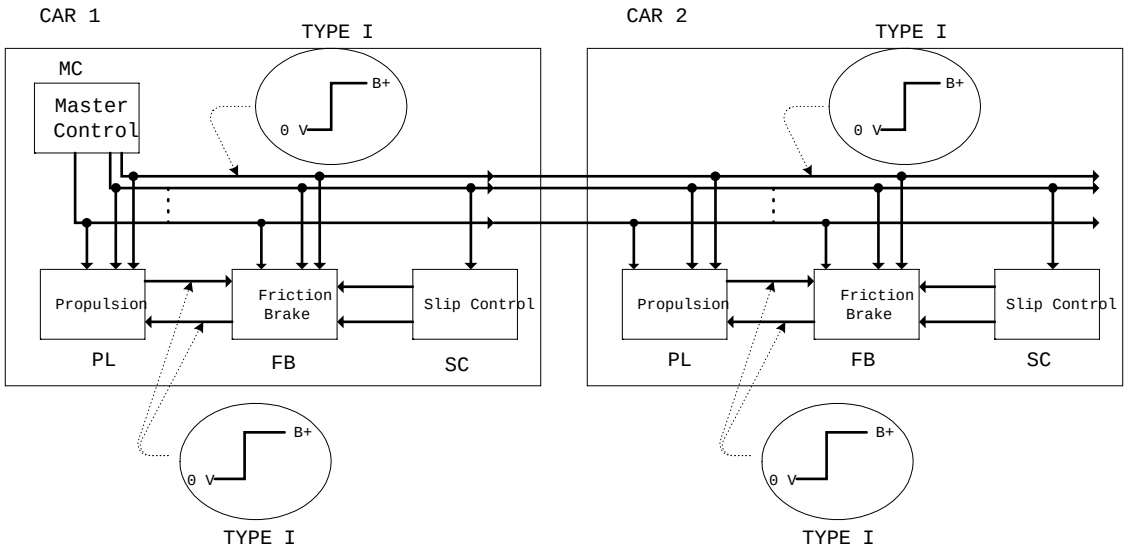

Figure B.1—Example block diagram, Type I interfaces

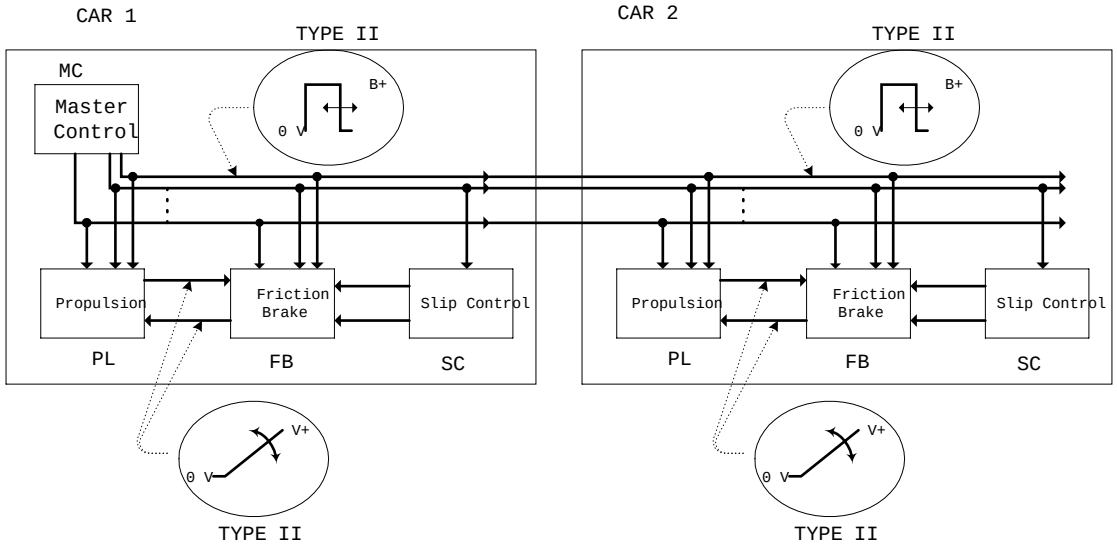

Figure B.2—Example block diagram, Type II interfaces

Copyright © 1999 IEEE. All rights reserved.
and Electronics Engineers, Inc.
IEEE
nitted without license from IHS
Not for Resale

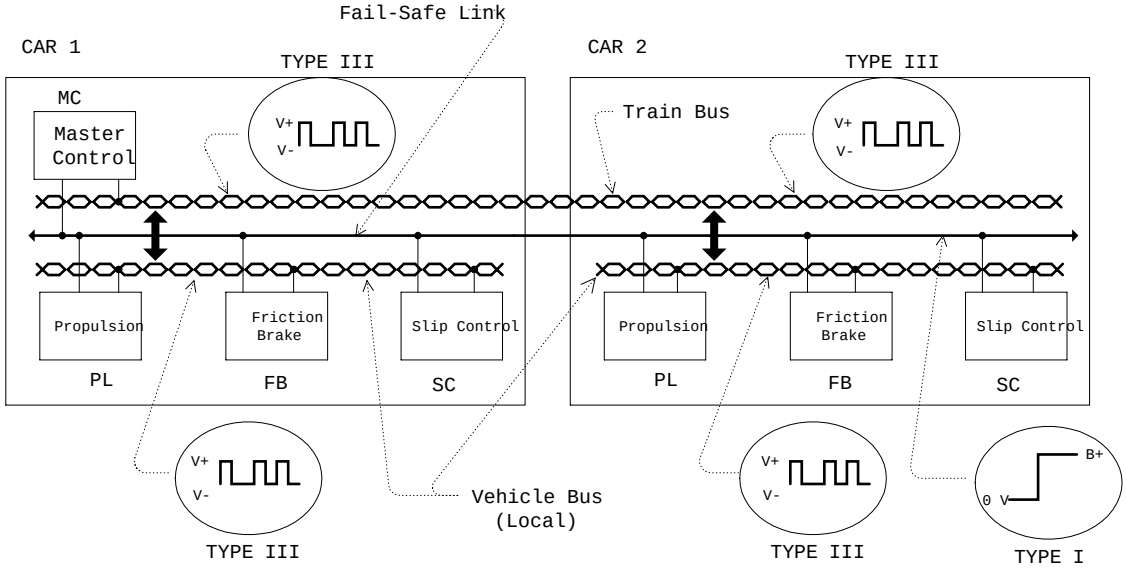

Figure B.3—Example block diagram, Type III interfaces

Copyright © 1999 IEEE. All rights reserved.

and Electronics Engineers, Inc.
IEEE
nitted without license from IHS
Not for Resale

Annex C

(informative)

Alternative forms of propulsion system response to power modulation interface signals

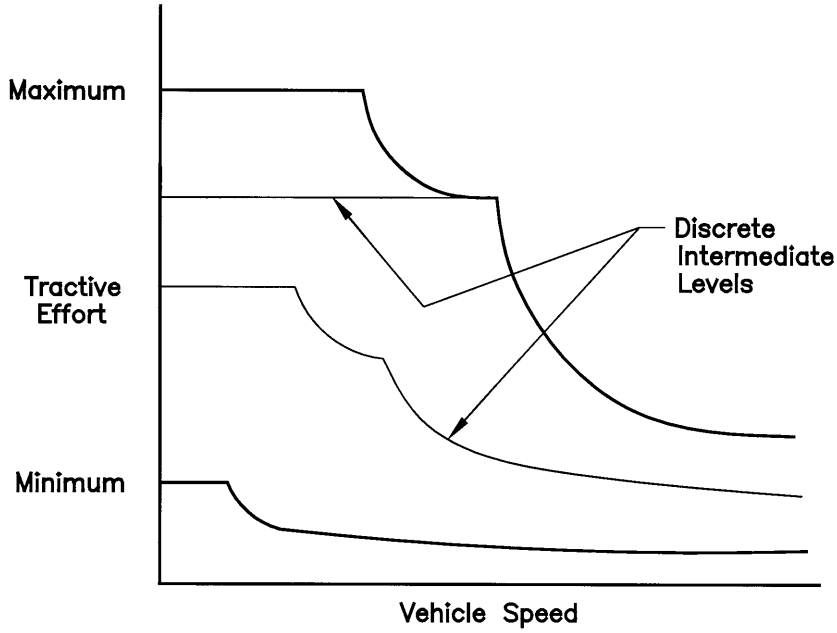

Figure C.1—Propulsion system response, Example 1

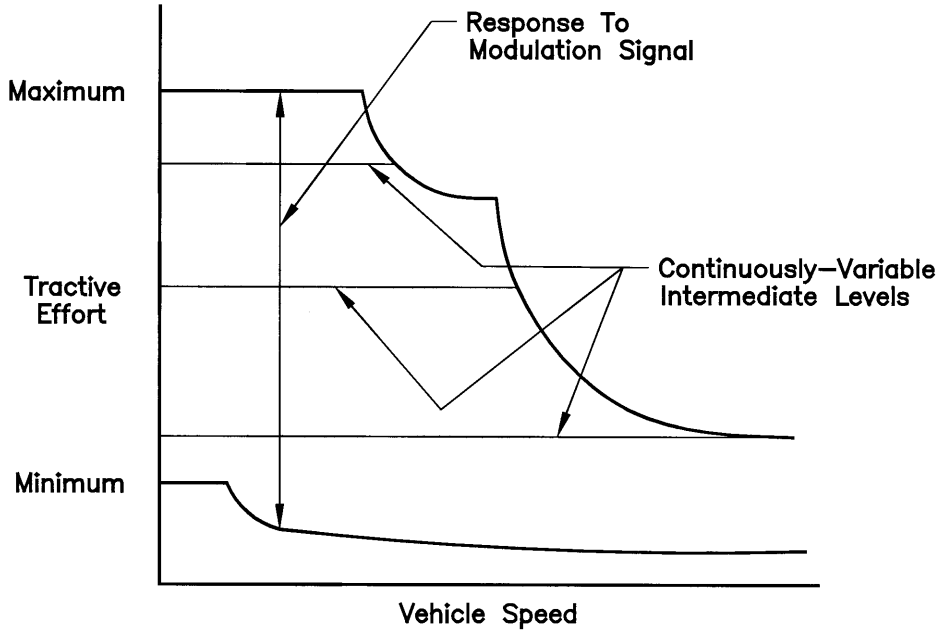

Figure C.2—Propulsion system response, Example 2

Copyright © 1999 IEEE. All rights reserved.
and Electronics Engineers, Inc.
IEEE
nitted without license from IHS
Not for Resale

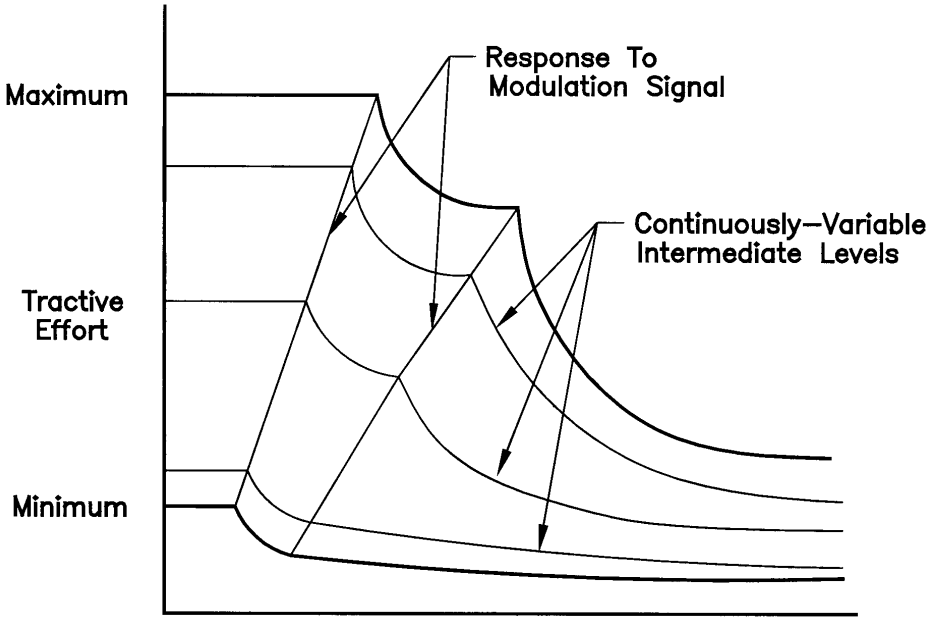

Figure C.3—Propulsion system response, Example 3

and Electronics Engineers, Inc.
IEEE
nitted without license from IHS
Copyright © 1999 IEEE. All rights reserved.
Not for Resale