IEEE Standards

1458™

IEEE Recommended Practice for the Selection, Field Testing, and Life Expectancy of Molded Case Circuit Breakers for Industrial Applications

IEEE Industry Applications Society

Sponsored by the
Petroleum and Chemical Industry Committee

IEEE

3 Park Avenue, New York, NY 10016-5997, USA

24 June 2005

Print: SH95226
PDF: SS95226

Copyright The Institute of Electrical and Electronics Engineers, Inc.
Provided by IHS under license with IEEE
No reproduction or networking permitted without license from IHS

Not for Resale

and Electronics Engineers, Inc.
IEEE
nitted without license from IHS
Not for Resale

IEEE Recommended Practice for the Selection, Field Testing, and Life Expectancy of Molded Case Circuit Breakers for Industrial Applications

Sponsor

Petroleum and Chemical Industry Committee
of the
IEEE Industry Applications Society

Approved 24 January 2005

IEEE-SA Standards Board

Abstract: A recommended procedure for the selection, application, and determination of the remaining life in molded case circuit breaker is provided.
Keywords: available fault values, circuit breaker testing, molded case circuit breakers, molded case circuit breakers basics, molded case circuit breakers life, safety

---

The Institute of Electrical and Electronics Engineers, Inc.
3 Park Avenue, New York, NY 10016-5997, USA

Copyright © 2005 by the Institute of Electrical and Electronics Engineers, Inc.
All rights reserved. Published 24 June 2005. Printed in the United States of America.

IEEE is a registered trademark in the U.S. Patent & Trademark Office, owned by the Institute of Electrical and Electronics Engineers, Incorporated.

National Electrical Safety Code and the NESC are registered trademarks in the U.S. Patent & Trademark Office, owned by the Institute of Electrical and Electronics Engineers, Incorporated.

National Electrical Code and NEC are both registered trademarks in the U.S. Patent & Trademark Office, owned by the National Fire Protection Association, Incorporated.

Print: ISBN 0-7381-4009-0 SH95226
PDF: ISBN 0-7381-4010-4 SS95226

No part of this publication may be reproduced in any form, in an electronic retrieval system or otherwise, without the prior written permission of the publisher.

Copyright The Institute of Electrical and Electronics Engineers, Inc.
Provided by IHS under license with IEEE
No reproduction or networking permitted without license from IHS
Not for Resale

IEEE Standards documents are developed within the IEEE Societies and the Standards Coordinating Committees of the IEEE Standards Association (IEEE-SA) Standards Board. The IEEE develops its standards through a consensus development process, approved by the American National Standards Institute, which brings together volunteers representing varied viewpoints and interests to achieve the final product. Volunteers are not necessarily members of the Institute and serve without compensation. While the IEEE administers the process and establishes rules to promote fairness in the consensus development process, the IEEE does not independently evaluate, test, or verify the accuracy of any of the information contained in its standards.

Use of an IEEE Standard is wholly voluntary. The IEEE disclaims liability for any personal injury, property or other damage, of any nature whatsoever, whether special, indirect, consequential, or compensatory, directly or indirectly resulting from the publication, use of, or reliance upon this, or any other IEEE Standard document.

The IEEE does not warrant or represent the accuracy or content of the material contained herein, and expressly disclaims any express or implied warranty, including any implied warranty of merchantability or fitness for a specific purpose, or that the use of the material contained herein is free from patent infringement. IEEE Standards documents are supplied "**AS IS**."

The existence of an IEEE Standard does not imply that there are no other ways to produce, test, measure, purchase, market, or provide other goods and services related to the scope of the IEEE Standard. Furthermore, the viewpoint expressed at the time a standard is approved and issued is subject to change brought about through developments in the state of the art and comments received from users of the standard. Every IEEE Standard is subjected to review at least every five years for revision or reaffirmation. When a document is more than five years old and has not been reaffirmed, it is reasonable to conclude that its contents, although still of some value, do not wholly reflect the present state of the art. Users are cautioned to check to determine that they have the latest edition of any IEEE Standard.

In publishing and making this document available, the IEEE is not suggesting or rendering professional or other services for, or on behalf of, any person or entity. Nor is the IEEE undertaking to perform any duty owed by any other person or entity to another. Any person utilizing this, and any other IEEE Standards document, should rely upon the advice of a competent professional in determining the exercise of reasonable care in any given circumstances.

Interpretations: Occasionally questions may arise regarding the meaning of portions of standards as they relate to specific applications. When the need for interpretations is brought to the attention of IEEE, the Institute will initiate action to prepare appropriate responses. Since IEEE Standards represent a consensus of concerned interests, it is important to ensure that any interpretation has also received the concurrence of a balance of interests. For this reason, IEEE and the members of its societies and Standards Coordinating Committees are not able to provide an instant response to interpretation requests except in those cases where the matter has previously received formal consideration. At lectures, symposia, seminars, or educational courses, an individual presenting information on IEEE standards shall make it clear that his or her views should be considered the personal views of that individual rather than the formal position, explanation, or interpretation of the IEEE.

Comments for revision of IEEE Standards are welcome from any interested party, regardless of membership affiliation with IEEE. Suggestions for changes in documents should be in the form of a proposed change of text, together with appropriate supporting comments. Comments on standards and requests for interpretations should be addressed to:

Secretary, IEEE-SA Standards Board

445 Hoes Lane

Piscataway, NJ 08854

USA

NOTE—Attention is called to the possibility that implementation of this standard may require use of subject matter covered by patent rights. By publication of this standard, no position is taken with respect to the existence or validity of any patent rights in connection therewith. The IEEE shall not be responsible for identifying patents for which a license may be required by an IEEE standard or for conducting inquiries into the legal validity or scope of those patents that are brought to its attention.

Authorization to photocopy portions of any individual standard for internal or personal use is granted by the Institute of Electrical and Electronics Engineers, Inc., provided that the appropriate fee is paid to Copyright Clearance Center. To arrange for payment of licensing fee, please contact Copyright Clearance Center, Customer Service, 222 Rosewood Drive, Danvers, MA 01923 USA; +1 978 750 8400. Permission to photocopy portions of any individual standard for educational classroom use can also be obtained through the Copyright Clearance Center.

--`,,`,`-`-`,,`,,`,`,,`---

Copyright The Institute of Electrical and Electronics Engineers, Inc.
Provided by IHS under license with IEEE
No reproduction or networking permitted without license from IHS

Not for Resale

Introduction

This introduction in not part of IEEE Std 1458-2005, IEEE Recommended Practice for the Selection, Field Testing, and Life Expectancy of Molded Case Circuit Breakers for Industrial Applications.

This is a new standard that, for the first time, provides in one document the information that is necessary in order to select, apply, and determine the remaining life of molded case circuit breakers. This standard is intended to be used by para-professionals and is not a high-level engineering document.

Notice to users

Errata

Errata, if any, for this and all other standards can be accessed at the following URL: http://standards.ieee.org/reading/ieee/updates/errata/index.html. Users are encouraged to check this URL for errata periodically.

Interpretations

Current interpretations can be accessed at the following URL: http://standards.ieee.org/reading/ieee/interp/index.html.

Patents

Attention is called to the possibility that implementation of this standard may require use of subject matter covered by patent rights. By publication of this standard, no position is taken with respect to the existence or validity of any patent rights in connection therewith. The IEEE shall not be responsible for identifying patents or patent applications for which a license may be required to implement an IEEE standard or for conducting inquiries into the legal validity or scope of those patents that are brought to its attention.

Participants

This following is a list of participants in the working group of the Petroleum and Chemical Industrial Committee of the Industrial Applications Society:

Gary L. Donner, *Chair*

Donald Colaberardino	Dennis W. Heath	Daniel Neeser
John Gardner	Clive W. Kimblin	Vincent Saporita
George D. Gregory	Andrew R. Leoni	Arthur J. Smith, III

Copyright © 2005 IEEE. All rights reserved.

Copyright The Institute of Electrical and Electronics Engineers, Inc.
Provided by IHS under license with IEEE
No reproduction or networking permitted without license from IHS
Not for Resale

The following members of the individual balloting committee voted on this standard. Balloters may have voted for approval, disapproval, or abstention.

Paul Anderson
William Anderson
Howard Bradfield
Dave Burns
Donald Colaberardino
Guru Dutt Dhingra
Mike Darby
Gary L. Donner
Donald Dunn
Kimberly Eastwood
C. James Erickson
Michael J. Foley
Carl Fredericks
George D. Gregory
John Travis Griffith
Paul Hamer
Richard Hulett
Ben Johnson
Clive W. Kimblin
Royce King
Kevin Lippert
Lisardo Lourido
Keith Malmedal
Kenneth Mcclenahan
Daleep Mohla
Paul Myers
Daniel Neeser
Kenneth Nicholson
Lorraine Padden
John Propst
Frank Rocchio
James Ruggieri
Chet Sandberg
Vincent Saporita
Robert Turner
S. Frank Waterer
Barry Wood
Donald W. Zipse

The final conditions for approval of this standard were met on 24 January 2005. This standard was conditionally approved by the IEEE-SA Standards Board on 8 December 2004, with the following membership:

Don Wright, *Chair*

Steve M. Mills, *Vice Chair*

Judith Gorman, *Secretary*

Chuck Adams
Stephen Berger
Mark D. Bowman
Joseph A. Bruder
Bob Davis
Roberto de Marca Boisson
Julian Forster*
Arnold M. Greenspan
Mark S. Halpin
Raymond Hapeman
Richard J. Holleman
Richard H. Hulett
Lowell G. Johnson
Joseph L. Koepfinger*
Hermann Koch
Thomas J. McGean
Daleep C. Mohla
Paul Nikolich
T. W. Olsen
Ronald C. Petersen
Gary S. Robinson
Frank Stone
Malcolm V. Thaden
Doug Topping
Joe D. Watson

*Member Emeritus

Also included are the following nonvoting IEEE-SA Standards Board liaisons:

Satish K. Aggarwal, *NRC Representative*
Richard DeBlasio, *DOE Representative*
Alan Cookson, *NIST Representative*

Michelle Turner
IEEE Standards Project Editor

Copyright © 2005 IEEE. All rights reserved.

--`,,`,`-`-`,,`,,`,`,,`---

Copyright The Institute of Electrical and Electronics Engineers, Inc.
Provided by IHS under license with IEEE
No reproduction or networking permitted without license from IHS

Not for Resale

Contents

1. Overview 1

1.1 Scope 1
1.2 Purpose 1

2. Normative references 1

3. Molded case circuit breaker basics 2

3.1 Molded case circuit breaker basics 2
3.2 Circuit breakers in general 2
3.3 Circuit breaker standards 3
3.4 Contacts open and close 4
3.5 Means to open and close contacts 4
3.6 Means to extinguish an arc 5
3.7 Means to respond to overcurrents/commands 7
3.8 Method for enclosing circuit breaker components 8
3.9 Method for mounting circuit breaker 9
3.10 Molded case circuit breaker components 11
3.11 Thermal conditions 12
3.12 Short-circuit conditions 13
3.13 Ground fault conditions 14
3.14 Types of trip units 14
3.15 Circuit breaker selectivity 18

4. Molded case circuit breaker safety considerations 20

5. Selection of molded case circuit breakers 20

5.1 Standard rated molded case circuit breakers 21
5.2 100-Percent rated molded case circuit breakers 22
5.3 Voltage rating election 22
5.4 Current ratings 23
5.5 Current rating selection 24
5.6 Selection of circuit breaker current rating 24
5.7 Interrupting rating 26

6. Estimated available fault current at transformer secondary 26

7. Simplified method to calculate available fault current at transformer secondary 28

7.1 METHOD 1: Simple approximation 29
7.2 METHOD 2: Accounting for cable between transformer and molded case circuit breaker 31

8. Procedures for field testing and determining the remaining life of molded case circuit breakers 35

8.1 Rated current hold in test 38
8.2 Exposed face and lug temperature check 39
8.3 Mechanical operation tests 39
8.4 Insulation resistance test 40
8.5 Individual pole resistance test (millivolt drop) 40

Copyright © 2005 IEEE. All rights reserved.

Copyright The Institute of Electrical and Electronics Engineers, Inc.
Provided by IHS under license with IEEE
No reproduction or networking permitted without license from IHS
Not for Resale

8.6 Inverse-time overcurrent trip test 41
8.7 Instantaneous overcurrent trip test 45
8.8 Accessory devices 46

Annex A (informative) Bibliography 47

--`,,`,`-`-`,,`,,`,`,,`---

Copyright © 2005 IEEE. All rights reserved.

Copyright The Institute of Electrical and Electronics Engineers, Inc.
Provided by IHS under license with IEEE
No reproduction or networking permitted without license from IHS

Not for Resale

IEEE Recommended Practice for the Selection, Field Testing, and Life Expectancy of Molded Case Circuit Breakers for Industrial Applications

1. Overview

1.1 Scope

This standard provides a recommended procedure for the selection, application, and determination of the remaining life in molded case circuit breakers. This recommended procedure is safe and easily understood.

1.2 Purpose

Molded case circuit breakers are one of the most widely used circuit protection devices in low-voltage (less than 1000 volt) applications. In spite of their wide use in industry, the average person specifying, installing, operating and maintaining these devices has less than a complete understanding of them. The purpose of this document is to provide people who purchase or maintain molded case circuit breakers with a single document that includes the following information:

- How molded case circuit breakers operate
- How to correctly size and select molded case circuit breakers
- How to safely maintain molded case circuit breakers
- How to determine when a molded case circuit breaker must be replaced

2. Normative references

This standard shall be used in conjunction with the following publications. The following referenced documents are indispensable for the application of this standard. For dated references, only the edition cited applies. For undated references, the latest edition of the referenced document (including any amendments or corrigenda) applies.

IEEE Std 242™, The Buff Book™—IEEE Recommended Practice for Protection and Coordination of Industrial and Commercial Power Systems.[1, 2]

Copyright © 2005 IEEE. All rights reserved.

Copyright The Institute of Electrical and Electronics Engineers, Inc.
Provided by IHS under license with IEEE
No reproduction or networking permitted without license from IHS
Not for Resale

IEEE Std 1015™, The Blue Book™—IEEE Recommended Practice for Applying Low-Voltage Circuit Breakers Used in Industrial and Commercial Power Systems.

3. Molded case circuit breaker basics

This clause describes the basic components of a molded case circuit breaker and how the components work.

3.1 Molded case circuit breaker basics

The topic of circuit breakers covers a very broad range of electrical devices, which have a number of things in common and an even larger number of dissimilar features and capabilities. The main groupings selected to cover circuit breakers are listed here as an introduction, without defining or explaining the individual groupings at this point:

- Circuit breakers in general
- Industrial molded case circuit breakers (600 V and below)
- Miniature circuit breakers (240 V and below)

Generally speaking, a circuit breaker is a device that:

- Provides protection
- Opens and closes
- Might be removable
- Might be fixed
- Might be installed by itself in an enclosure
- Might be installed with other equipment
- Is applied at many voltage levels

Circuit breaker definitions vary depending upon the source of the definition.

NEMA definition—A circuit breaker is defined as a device designed to open and close a circuit by non-automatic means and to open the circuit automatically on a predetermined overcurrent, without injury to itself when properly applied within its rating.

ANSI definition—A circuit breaker is defined as a mechanical switching device, capable of making, carrying and breaking currents under normal circuit conditions and also making, carrying for a specified time and breaking currents under specified abnormal circuit conditions such as those of short circuit.

3.2 Circuit breakers in general

The premise is the same for both definitions and both are accurate, but the wording is quite different. The same is true with the many types of circuit breakers. Their general purpose is the same, but there are also a number of significant differences.

Circuit breakers come in what seems to be a never-ending array of sizes, designs, ratings, and functions (Figure 1). In general, a circuit breaker provides switching capabilities and protection against one or more overcurrent conditions. Examples of overcurrents are overloads, short circuits, and ground faults.

[1]IEEE publications are available from the Institute of Electrical and Electronics Engineers, Inc., 445 Hoes Lane, Piscataway, NJ 08854, USA (http://standards.ieee.org/).

[2]The IEEE standards or products referred to in this clause are trademarks of the Institute of Electrical and Electronics Engineers, Inc.

Copyright © 2005 IEEE. All rights reserved.
Copyright The Institute of Electrical and Electronics Engineers, Inc.
Provided by IHS under license with IEEE
No reproduction or networking permitted without license from IHS
Not for Resale

The circuit breaker might be applied as an individual item in its own enclosure or utilized in conjunction with a wide variety of other equipment in a common enclosure. Depending upon such things as system voltage, type of circuit breaker, and specific application, circuit breakers in common enclosures with other devices might be called panelboards, switchboards, or switchgear, which are each specifically defined by a set of standards. They might even be referred to as just an assembly. An assembly could include some or all of the following: circuit breakers, control devices, metering devices, regulating devices, equipment interconnections, and supporting structures.

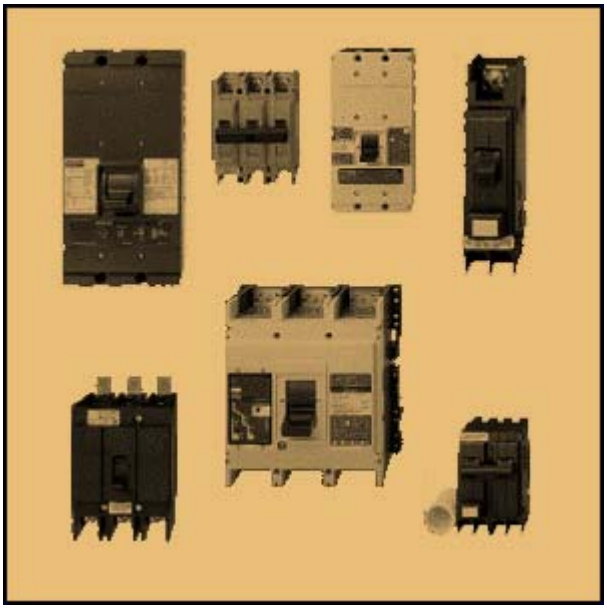

Figure 1—A broad range of circuit breakers

From a very broad perspective, all circuit breakers have the following common design and functional characteristics:

— Compliance with specific standards

— Set of open/close contacts

— Means to open and close the contacts

— Means to extinguish an arc

— Means to respond to overcurrents/commands

— Method for enclosing circuit breaker components

— Method for mounting circuit breaker

3.3 Circuit breaker standards

Circuit breakers are designed, built, and tested in accordance with one or more specific sets of standards. The applicable standards might be domestic, international, or both. These standards actually categorize particular types of circuit breakers. The governing standards are ANCE, ANSI, CSA, IEC, IEEE, NEMA, and UL. For a circuit breaker to be used, it shall comply with one or more specific sets of these standards.

Copyright © 2005 IEEE. All rights reserved.

Copyright The Institute of Electrical and Electronics Engineers, Inc.
Provided by IHS under license with IEEE
No reproduction or networking permitted without license from IHS
Not for Resale

3.4 Contacts open and close

Contacts in a circuit breaker provide a means for isolating or connecting a part of a circuit from or with the rest of the system. The contacts are like a wall switch that turns your lights on and off. In the case of a circuit breaker, however, the number of contacts depends upon the circuit breaker application. For example, a three pole circuit breaker applied on a three-phase electrical system would have three sets of contacts. In general, circuit breaker contacts are provided in sets, one set per phase. A contact set is usually comprised of a fixed part and a movable part. As a circuit breaker opens or closes, the fixed part of the contact maintains its position, while the movable part moves to close (make) or open (break) the contact.

3.5 Means to open and close contacts

Circuit breakers utilize some type of operating mechanism to open and close the contacts just discussed. This operating mechanism can be mechanical or electro-mechanical.

Depending upon the type of circuit breaker being considered, the operating mechanism could be called upon to

- Open and close the contacts manually
- Open and close the contacts on demand from a separate control or relay device
- Open the contacts automatically

3.5.1 Opening and closing contacts

Let’s consider a three-phase circuit breaker of any kind. Designs are such that three sets of contacts open or close simultaneously. This means that all the contacts are linked together in some manner. This part of the mechanism might be connected mechanically in some fashion to a common handle. The handle, when operated, puts the mechanism into motion, and opens or closes the circuit breaker by opening or closing the contacts.

Circuit breakers, by virtue of their size and/or one or more standards requirements, need additional assistance to set the mechanism in motion and open or close the contacts as required. This additional assistance takes the form of opening or closing springs. Springs play a big role in the precise functioning of circuit breaker mechanisms. Springs are stretched or compressed to provide the energy necessary to assist with the proper opening or closing of the contacts.

A circuit breaker mechanism with spring assistance falls into one of the two following categories:

- Over-toggle type
- Stored-energy type

Over-toggle spring mechanisms are normally associated with molded case circuit breakers with two-step stored-energy types and insulated case and power circuit breakers.

3.5.2 Over-toggle

In a circuit breaker with an over-toggle mechanism, a manual handle on the circuit breaker is operated to set the mechanism in motion. The handle is moved to open or close the circuit breaker until a point is reached where the handle goes over-toggle (past the point of no return), and the spring-assisted mechanism automatically opens or closes the circuit breaker. This toggle mechanism is called the quick-make, quick-break type, meaning that the speed with which the contacts open or close is independent of how fast the handle is moved. A motor operator can be used to operate the handle automatically in lieu of manually going through the motion. The design is such that the circuit breaker would trip open when called upon to provide its expected protection, even if the manual handle were to be held in the ON (closed) position.

--`,,`,`-`-`,,`,,`,`,,`---
Copyright © 2005 IEEE. All rights reserved.
Copyright The Institute of Electrical and Electronics Engineers, Inc.
Provided by IHS under license with IEEE
No reproduction or networking permitted without license from IHS
Not for Resale

3.5.3 Two-step stored energy

The closing springs in this type of mechanism are used to store energy for use when needed. The process of storing energy and closing the circuit breaker is separated into the following two steps:

1) Closing springs are charged with the circuit breaker open. The circuit breaker is then closed.
2) The closing springs are re-charged with the circuit breaker closed providing for an open-close-open sequence.

Storing the energy in the springs is accomplished through the use of a manual-charging handle, an automatic means through the use of a small electric motor, or both. By having the ability to re-charge the closing springs, the circuit breaker can rapidly and remotely reclose after a fault. This ability to attempt a reclosure if a fault causes the circuit breaker to trip is designed to provide the user with a high degree of service continuity. Closing the circuit breaker can be accomplished by using a manual pushbutton or an electrical closing solenoid.

3.5.4 Electromagnetic assistance

Many molded case circuit breaker designs achieve high interrupting ratings by being designed to take full advantage of certain natural facts of physics to assist the operating mechanism with the opening process. This concept centers on a natural repulsion between two parallel conductors with current running in them in opposite directions.

While on the subject of the importance of the application of electromagnetic theory to circuit breaker design, it is appropriate to note that some new low-voltage power breaker designs take advantage of electromagnetic forces in both directions, opening and closing. Designs are such that the forces are used to help hold the contacts closed against a fault when required, and then reversed to assist with the opening process.

3.6 Means to extinguish an arc

An arc is defined as a discharge of electric current crossing a gap between two contacts. Arcs are formed when the contacts of a circuit breaker are opened under load. Arcs can be very destructive and vary greatly in size and intensity. The size of the arc depends on the amount of current present when the contacts are pulled apart. For example, the arc formed when a normal load current is broken would be insignificant in comparison to the arc formed when a short-circuit current is broken. Since arcs cannot be prevented, circuit breakers are designed to control them.

The heat associated with an arc creates an ionized gas environment. The bigger the arc, the more heat created. The more heat created, the more ionization that takes place. The more ionization, the better the conditions are for an arc to be maintained and grow. Obviously, this is the condition that must be dealt with quickly and effectively by a circuit breaker. The important thing to remember here is that the ability of the circuit breaker to control the arc is the key to its short-circuit interrupting capability. Of all overcurrent conditions, the short circuit is potentially the most devastating.

3.6.1 Current zero and arc extinguishing

When considering alternating current, it is important to note that there is no current flowing at each point zero (current zero) in the cycle. This is a very important aspect of arc extinguishing. With no current at point zero, conditions are optimal for preventing an arc from continuing.

3.6.2 Voltage and arc extinguishing

Voltage is also a very important consideration. Voltage tries to keep the current moving. It will keep pushing the current through point zero and give new life to the arc. Current does not take kindly to being stopped in

Copyright © 2005 IEEE. All rights reserved.

Copyright The Institute of Electrical and Electronics Engineers, Inc.
Provided by IHS under license with IEEE
No reproduction or networking permitted without license from IHS Not for Resale

its tracks during the extinguishing of an arc. When an arc is stopped at current zero, the voltage will do its best to re-ignite the arc. Assuming it is unsuccessful, the built-up voltage pressure puts a great deal of potentially destructive stress on not only the device being used to extinguish the arc, the circuit breaker, but also the entire system. Equipment designs must take this possibility into account. Whether or not extinguishing of the arc is successful depends, in general, on the re-establishment of the dielectric strength of the gap between the open circuit breaker contacts. If the dielectric strength is greater than the voltage trying to re-ignite the arc, arc extinguishing will be successful. A dielectric is any insulating material between two conductors. The dielectric strength is the maximum voltage a dielectric can withstand without breaking down.

3.6.3 Arc extinguishing methods

In general, the control and extinction of an arc in molded case circuit breakers make use of one or more of the following four techniques:

a) Arc extinguisher (chute)
b) Break arc into smaller pieces
c) Blow arc out with high-pressure gases
d) Enclose contacts in non-conductive environments

Keep in mind that even though all of these four techniques are used, the arc extinguisher chute method is the predominantly used method of extinguishing the arc in molded case circuit breakers. This method cools and de-ionizes the arc at the same time, while it also contributes to the arc not being able to sustain itself.

3.6.4 Arc extinguisher (chute)

The function of the arc extinguisher is to control, divide, and extinguish an arc each time a breaker interrupts current. An arc extinguisher, therefore, dissipates arcs that result when the circuit breaker interrupts current flow. Each arc extinguisher consists of a stack of U-shaped steel plates held together by two insulating side plates. When an interruption occurs and the contacts separate, the current flow through the ionized region between the contacts induces a magnetic field around the arc and arc extinguisher. The resulting force drives the arc into the steel plates, de-ionizing the gas while dividing and cooling the arc.

Standard molded case circuit breakers utilize a linear current flow contact arrangement. A small blow-apart force between the contacts is generated under short-circuit conditions, which helps to open the contacts. The majority of the opening action, however, is caused by the mechanical energy stored in the trip mechanism itself.

Refinements have been made to the arc extinguisher, but not until the use of the reverse loop contact design have significant strides been made in the direction of improved arc extinguishing. The reverse loop design takes advantage of a principle of physics that describes what happens when current flows in essentially opposite paths. A much greater blow-apart force between the contacts is generated with the reverse loop design. This blow-apart force is directly proportional to the size of the fault current; the greater the fault, the greater the force. This force assists with rapid arc extinguishing by causing faster contact opening speeds. (See Figure 2.)

--`,,`,`-`-`,,`,,`,`,,`---
Copyright © 2005 IEEE. All rights reserved.
Copyright The Institute of Electrical and Electronics Engineers, Inc.
Provided by IHS under license with IEEE
No reproduction or networking permitted without license from IHS
Not for Resale

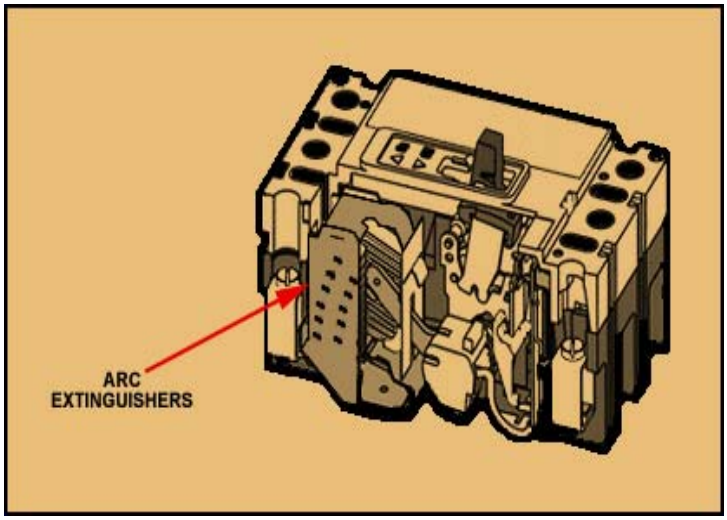

Figure 2—Arc extinguishers

3.7 Means to respond to overcurrents/commands

For a circuit breaker to be effective, a means must be provided that enables the circuit breaker to perform automatically or in response to a command. In order to accomplish this, generally, low-voltage circuit breakers are provided with integrally mounted devices called trip units.

3.7.1 Trip units

The function of the trip unit is to trigger the operating mechanism in the event of a prolonged overload or short-circuit current. To accomplish this, electromechanical (thermal magnetic) or electronic trip units are provided. (See Figure 3.) The traditional molded case circuit breaker has used electromechanical (thermal magnetic) trip units.

Protection is provided by combining a temperature-sensitive device with a current-sensitive electromagnetic device, both of which act mechanically on the trip mechanism. Molded case circuit breakers utilize one or a combination of different trip elements to provide the required circuit protection for a particular application. These trip elements protect against three conditions—thermal overloads, short circuits, and ground faults.

Copyright © 2005 IEEE. All rights reserved.

Copyright The Institute of Electrical and Electronics Engineers, Inc.
Provided by IHS under license with IEEE
No reproduction or networking permitted without license from IHS
Not for Resale

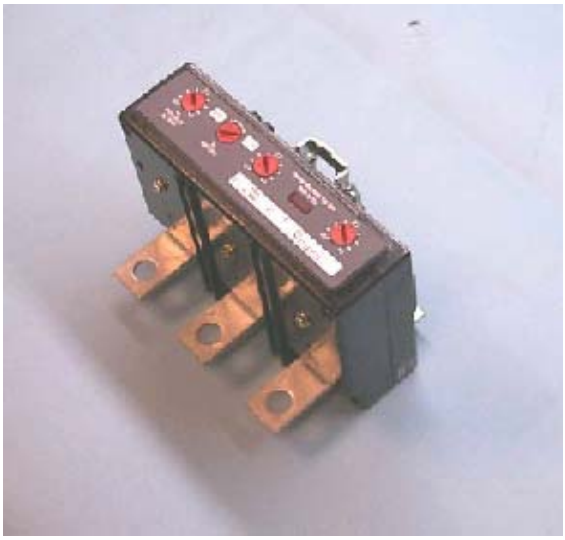

Figure 3—Trip unit

3.8 Method for enclosing circuit breaker components

The rigid circuit breaker frame provides a means by which all the required pieces and parts can be mounted and kept in place, ensuring the proper operation of the circuit breaker. The frame does more than just hold all the components together. It plays a critical role in the overall design's ability to comply with applicable standards. For example, the circuit breaker frame provides the rigidity and strength required to successfully deal with the interruption process and achieve the desired interrupting ratings. The frame's mechanical strength is sufficient to withstand the magnetic forces created by the square of the peak current, which could be quite large and potentially destructive. It also provides for insulation and isolation of the current path, offering personnel protection near the equipment during normal (no overcurrent) operation. Finally, the frame also provides a means by which the circuit breaker can be mounted and used. Molded case circuit breakers utilize molded insulating materials. Other low-voltage power circuit breakers and current medium voltage power circuit breakers are of a metal frame design.

3.8.1 Molded insulating material type

The primary functions of the molded case frame are to provide a rigid insulated housing to mount all of the circuit breaker components and deliver mechanical strength. Cases or frames are usually molded from a strong insulating material, such as glass-polyester or thermoset composite resins. Sizes vary according to the ampere rating of the circuit breaker. (See Figure 4.)

Copyright © 2005 IEEE. All rights reserved.
Copyright The Institute of Electrical and Electronics Engineers, Inc.
Provided by IHS under license with IEEE
No reproduction or networking permitted without license from IHS
Not for Resale

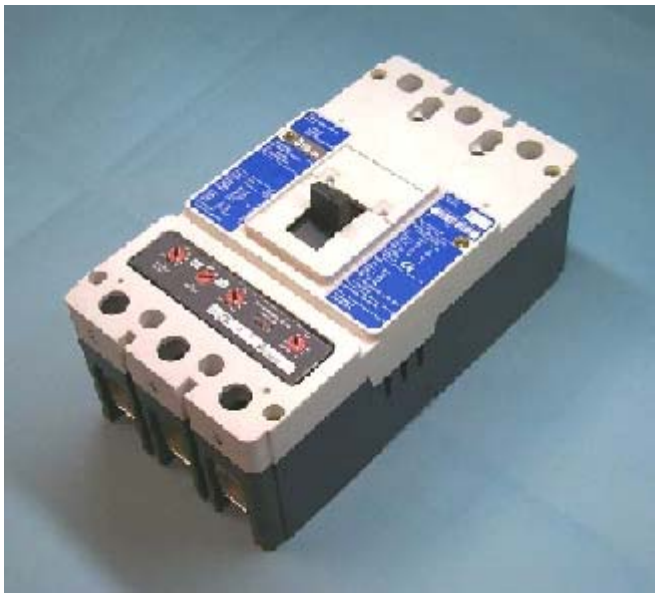

Figure 4—Molded insulating material type

3.9 Method for mounting circuit breaker

The mounting method is the way the circuit breaker is actually used in its individual enclosure or assembly. Circuit breakers, depending on the type and/or the particular application, are mounted for use in one of three basic ways:

— Fixed Mounted
— Removable
— Drawout

3.9.1 Fixed mounted

Generally speaking, a circuit breaker that is put into position in its individual enclosure or assembly and permanently bolted (fixed) in that position is considered a fixed mounted circuit breaker (Figure 5). To safely remove and/or replace a fixed circuit breaker, the power SHALL be removed from the circuit breaker and the bolted connections SHALL be undone.

--`,,`,``-`-`,,`,,`,`,,`---

Copyright © 2005 IEEE. All rights reserved.

Copyright The Institute of Electrical and Electronics Engineers, Inc.
Provided by IHS under license with IEEE
No reproduction or networking permitted without license from IHS
Not for Resale

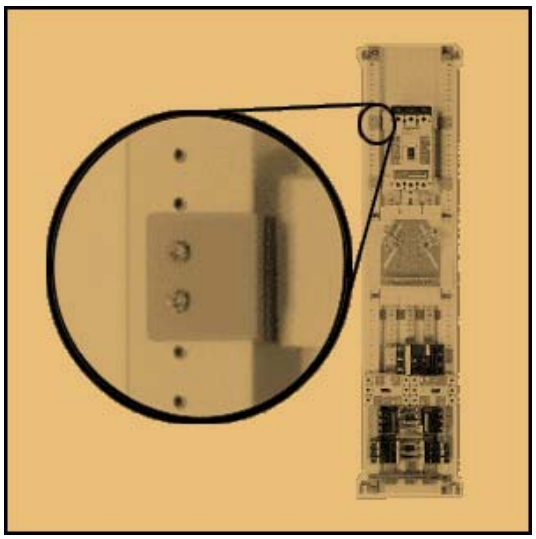

Figure 5—Fixed mounted

3.9.2 Removable

A removable circuit breaker is similar to a fixed mounted circuit breaker in that it is fixed in its position and shall not be removed without removing power from the circuit breaker. The removable circuit breaker (see Figure 6) differs from the fixed in that it is provided with some type of mounting mechanism that permits removal of the circuit breaker without unbolting connections. Basically, the removable circuit breaker is more convenient for maintenance than the fixed type.

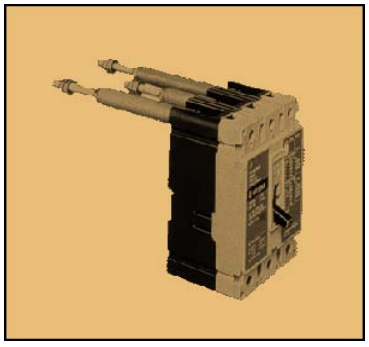

Figure 6—Removable

3.9.3 Drawout

A drawout circuit breaker is normally provided with a mechanism mounted to the circuit breaker that matches up with some type of mechanism or cradle permanently mounted in an enclosure or assembly (see Figure 7). This configuration permits the circuit breaker to be moved into or out of its structure, without disconnecting or unbolting anything. Movement of the circuit breaker in or out could be manual or it could be accomplished using some type of racking mechanism.

Copyright © 2005 IEEE. All rights reserved.
Copyright The Institute of Electrical and Electronics Engineers, Inc.
Provided by IHS under license with IEEE
No reproduction or networking permitted without license from IHS
Not for Resale

A racking mechanism permits a circuit breaker to be moved, usually by turning or ratcheting a handle. By design, only the circuit breaker's load needs to be turned off to rack the circuit breaker from the "connected" position. This is accomplished by built-in interlocks, which automatically open the circuit breaker before racking out begins. The drawout feature is quite beneficial, since the power to the entire assembly does not have to be turned off to service one circuit breaker.

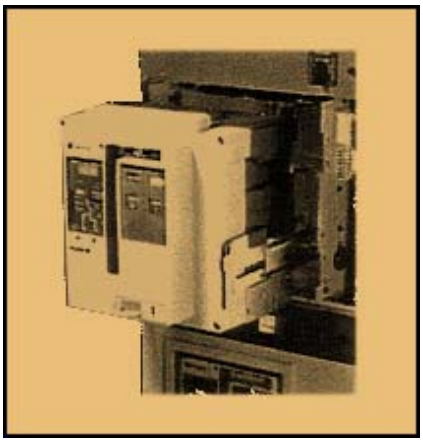

Figure 7—Drawout mounted

3.10 Molded case circuit breaker components

Molded case circuit breakers are evaluated per the UL Standard 489 [B6][3]. Typical voltage ranges are

- 120 V
- 240 V
- 277 V
- 480 V
- 600 V

Typical current ranges are 15 A through 3000 A, with fault current ranges of 10 kA through 100 kA.

3.10.1 Molded case (frame)

A cut-away view of a three-pole molded case circuit breaker is shown in Figure 8. The function of the molded case is to provide an insulated housing in which all of the components are mounted. The cases are molded from glass-polyester material that combines ruggedness and high dielectric strength in a compact design.

[3]The numbers in brackets correspond to those of the bibliography in Annex A.

Copyright © 2005 IEEE. All rights reserved.

Copyright The Institute of Electrical and Electronics Engineers, Inc.
Provided by IHS under license with IEEE
No reproduction or networking permitted without license from IHS
Not for Resale

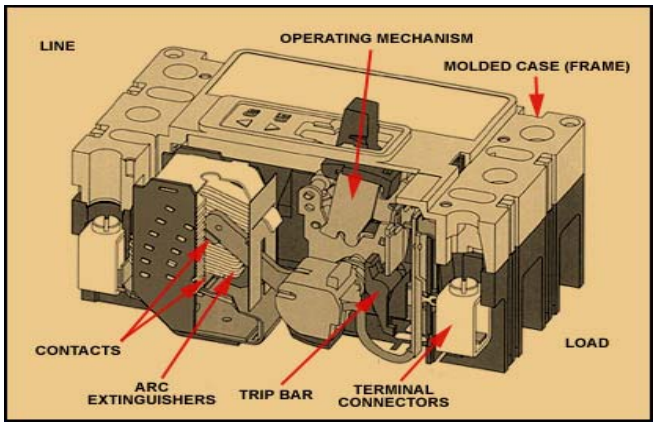

Although many types of molded case circuit breakers are manufactured, all are comprised of the following five main components:

— Molded case (frame)
— Operating mechanism
— Arc extinguishers
— Contacts
— Trip units

Figure 8—Cut-away view of molded case circuit breaker

Each different type and size of molded case is assigned a frame designation. This frame identification describes a number of important characteristics of the breaker, i.e., maximum voltage and current ratings, interrupting ratings, standards met, and physical dimensions of the molded case. Unfortunately, all manufacturers have a different identification system for their own breakers because their breakers' characteristics can differ from those of other manufacturers. For example, there might be three different interrupting ratings in the same physical frame size made by one manufacturer, while another manufacturer might have to use three physically different packages.

3.11 Thermal conditions

Insulation deterioration in electrical conductors is usually the result of overload conditions. When an overload condition exists, a temperature buildup occurs between the insulation and the conductor. Uncontrolled, this excessive heat will reduce the life of the conductor and eventually result in a short circuit as the insulation fails.

The heat in a conductor depends on the square of the RMS current, the conductor resistance (R) and the time (t) the current flows. If the current flowing into a conductor and the time for which it flows are monitored, overload conditions are predictable and can be detected.

A time-current curve shows the boundary between the normal and the overload condition. A typical time-current curve for the thermal (overload) element of a circuit breaker protective device indicates that a trip will occur in 1800 seconds at 135% of rating (Point A) or ten seconds at 500% of rating (Point B). See Figure 9. A circuit protective device uses time-current curves to indicate when it will operate to protect a conductor against overload conditions.

Copyright © 2005 IEEE. All rights reserved.
Copyright The Institute of Electrical and Electronics Engineers, Inc.
Provided by IHS under license with IEEE
No reproduction or networking permitted without license from IHS
Not for Resale

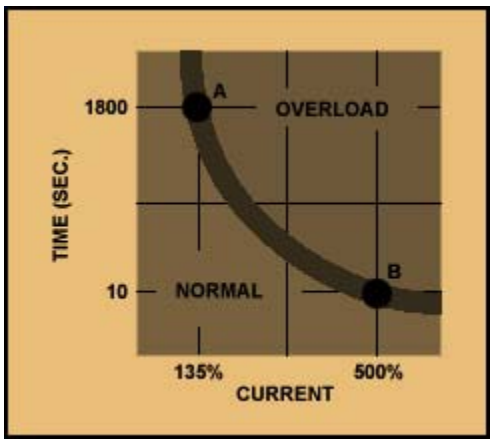

Figure 9—Overload time-current curve

3.12 Short-circuit conditions

Short-circuit currents (fault currents) usually occur when abnormally high currents flow due to the failure of the insulation. When the insulation between phases or between phases and ground breaks down, short-circuit currents, limited only by the capabilities of the distribution system, can be expected to flow into the fault. The short circuit must be eliminated quickly to protect against damage from the resulting thermal and dynamic stresses.

A typical time-current curve for a short-circuit (instantaneous) element of a circuit breaker indicates that a trip will not occur until the fault current reaches or exceeds Point A as shown in Figure 10. The methods used by a molded case circuit breaker to protect against a short circuit are also addressed in detail later in this clause.

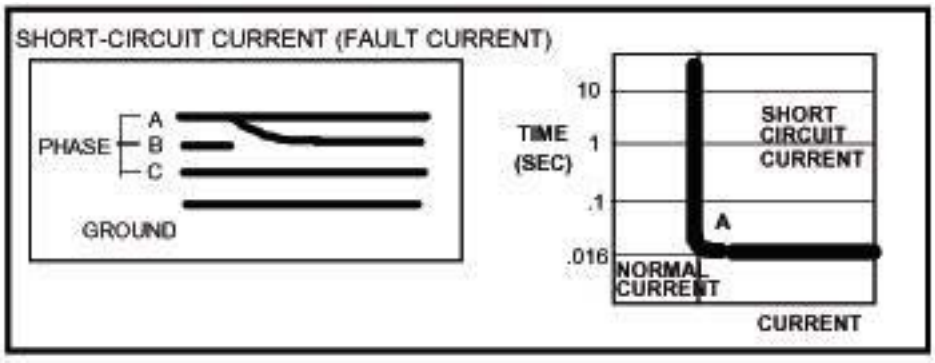

Figure 10— Short-circuit time-current curve

Copyright © 2005 IEEE. All rights reserved.

Copyright The Institute of Electrical and Electronics Engineers, Inc.
Provided by IHS under license with IEEE
No reproduction or networking permitted without license from IHS
Not for Resale

3.13 Ground fault conditions

A ground fault is one particular type of short circuit. It is a short circuit that involves current going to ground, and is probably the most common type of fault experienced on low-voltage systems. Arcing ground fault currents are often not of a large enough magnitude to be detected by the standard protective device. Undetected, the ground fault current can develop into a current value high enough to trip the standard protective device. By this time, it is often too late and the damage has been done. This is especially true with motors where an internal insulation failure can result in serious damage.

Traditionally, when an electrical system required the detection of ground fault currents, separate ground fault protection devices were used to provide the additional level of protection. With the advent of electronic trip circuit breakers, ground fault protection has become an integral part of the trip unit.

The National Electrical Code® (NEC®) (NFPA 70) [B4] requires ground fault protection on specific applications, such as service entrance. NEC [B4] rules are dependent upon such factors as the service's current rating, the voltage level, the type of system, and how the system is grounded.

3.14 Types of trip units

A. Fixed or interchangeable trip unit

Conventional molded case circuit breakers are available with either a fixed or interchangeable electromechanical trip unit, depending on the type and frame size. With a fixed trip breaker, the entire breaker shall be replaced if a new trip rating is required. With an interchangeable trip breaker, only the trip unit has to be changed, up to the maximum current rating of the breaker frame.

Some molded case circuit breakers offer one additional interchangeable dimension, interchangeability between electromechanical and electronic trip units within the same frame. The trip units can be interchanged with no modifications.

All interchangeable electromechanical trip breakers have adjustable magnetic elements that provide short-circuit protection. Certain smaller breaker frame sizes are sealed units, as required by UL, and are not interchangeable trip unit breakers. The magnetic element on these sealed breakers is not adjustable.

B. Fixed thermal and adjustable thermal settings

Electromechanical trip circuit breakers contain thermal trip elements, which provide overload protection. This thermal element may be either fixed or adjustable. Except for adjustable electronic trips, UL regulated circuit breakers utilize a fixed thermal element.

3.14.1 Electromechanical trip unit

Conventional breakers utilize bimetal and electromagnets to provide overload and short-circuit protection. This type of protective action is referred to as thermal magnetic and has been the industry practice.

Thermal trip action is achieved through the use of a bimetal heated by the load current. On a sustained overload, the bimetal will deflect, causing the operating mechanism to trip. The time needed for the bimetal to bend and trip the circuit breaker varies inversely with the current.

A bimetal consists of two strips of metal bonded together. Each strip has a different thermal rate of heat expansion. Heating of the bimetal due to excessive current will cause the bimetal to bend or deflect. The metal having the greater rate of expansion will be on the outside (longer boundary) of the bend curve. To trip

Copyright © 2005 IEEE. All rights reserved.
Copyright The Institute of Electrical and Electronics Engineers, Inc.
Provided by IHS under license with IEEE
No reproduction or networking permitted without license from IHS
Not for Resale

the breaker, the bimetal deflects far enough to physically push the trip bar and unlatch the contacts. (See Figure 11.)

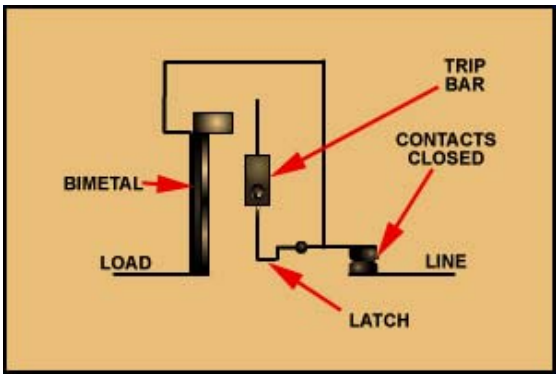

Figure 11—Thermal trip portion

Deflection is predictable as a function of current and time, as shown in Figure 12. This means, for example, that a typical 100 A breaker might trip in 1800 seconds at 135% of rating (Point A) or 10 seconds at 500% of rating (Point B). Consequently, bimetal provides a long time delay on light overloads, yet has a fast response on heavier overloads.

Thermal elements are calibrated at the factory and are not field adjustable for UL regulated applications. A specific thermal element is to be supplied for each current rating. For example, a particular frame breaker may be available from the factory with various thermal elements ranging from 15 A to 150 A. The thermal element cannot exceed 150 A because the breaker is built on a 150 A frame.

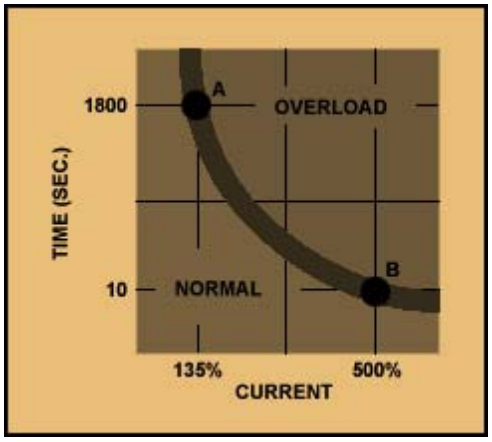

Figure 12—Typical time-current curve for a 100 A thermal element of a breaker

Magnetic trip action is achieved through the use of an electromagnet whose winding is in series with the load current. When a short circuit occurs, the current passing through the circuit conductor causes the magnetic field strength of the electromagnet in the breaker to rapidly increase and attract the armature. As the armature is attracted to the electromagnet, the armature rotates the trip bar causing the circuit breaker to trip as diagramed in Figure 13. The only delay factor is the time it takes the contacts to physically open and extinguish the arc. The action generally takes place in less than one cycle and trips the breaker

Copyright © 2005 IEEE. All rights reserved.

Copyright The Institute of Electrical and Electronics Engineers, Inc.
Provided by IHS under license with IEEE
No reproduction or networking permitted without license from IHS
Not for Resale

instantaneously, without any intentional delay. Older breakers or breakers that have been in service for a long period of time can operate more slowly, depending on the environment in which they have been housed.

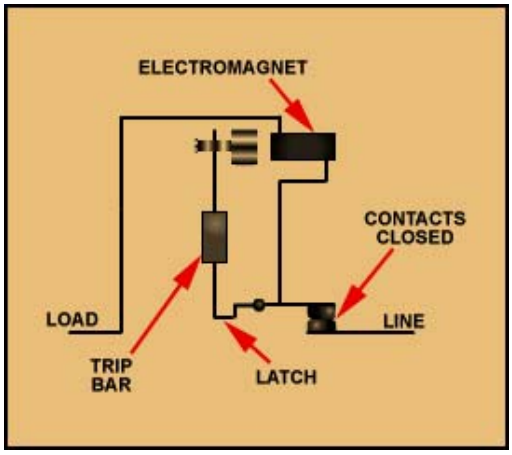

Figure 13—Magnetic trip portion

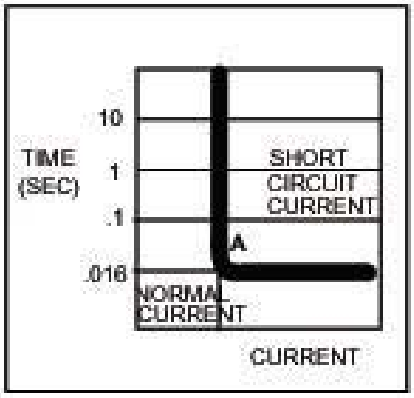

Figure 14—Magnetic time-current curve

A typical magnetic time-current curve is illustrated in Figure 14 and indicates that the breaker will not trip until the current reaches or exceeds Point A. The opening speed of the contacts is dependent on the actual contact design, not just the operating mechanism itself. Certain contact designs provide additional assistance to the opening cycle, resulting in improved arc extinguishing.

Magnetic elements may be either fixed or adjustable, depending upon the type of breaker and frame size. For example, most thermal magnetic breakers above the 150 A frame size have adjustable magnetic trips.

With adjustable models, the magnetic element of each pole of the trip unit can be adjusted by rotating adjustment buttons in the breaker cover. The buttons have several settings with values in multiples of the trip unit ampere rating. Spring tension on the magnet armature is changed when adjustments are made, resulting in different magnetic settings.

Copyright © 2005 IEEE. All rights reserved.
Copyright The Institute of Electrical and Electronics Engineers, Inc.
Provided by IHS under license with IEEE
No reproduction or networking permitted without license from IHS
Not for Resale

A similar curve for an adjustable magnetic element demonstrates how the adjustment buttons move the curve from left to right as the magnetic trip is increased. On the lowest setting, the breaker will not trip magnetically until the current reaches or exceeds 250% of its current rating. (See Figure 15.) As the magnetic setting is increased, the current trip point changes, as shown on the adjustable magnetic curve in Figure 15. The mechanism is continuously adjustable over the entire range, from the lowest setting (approximately two times) to the highest setting (approximately 10 times).

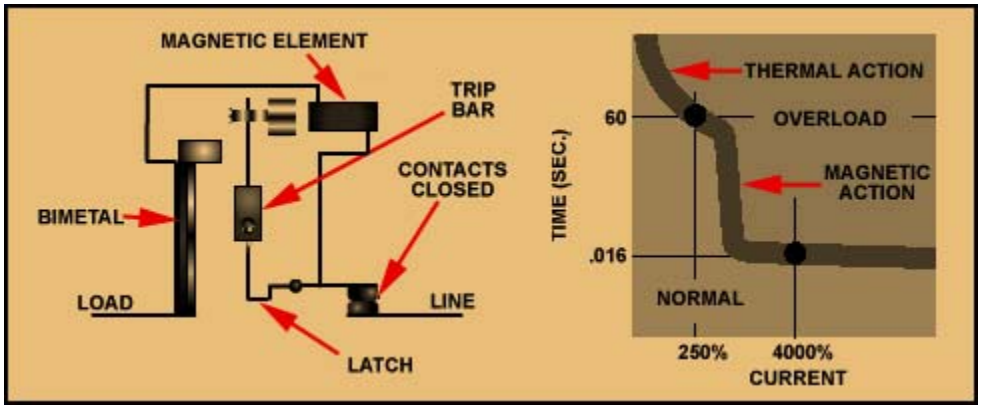

Figure 15—Putting it all together

3.14.2 Electronic trip units

Thermal magnetic trip units combine the features of both the thermal and magnetic actions. For example, two points on the illustrated trip curve (see Figure 15) show both the thermal and magnetic action for a typical 100 A breaker. A 250% overload would take approximately 60 s before the bimetal would deflect far enough to trip the breaker. However, if instead of an overload there were a short circuit that was 4000% (40 times) of the breaker rating, the electromagnet in the breaker would attract the armature and trip the breaker in less than one cycle.

A thermal magnetic trip unit is well suited to most general-purpose applications because it is temperature sensitive and automatically tends to follow safe cable and equipment loading, which varies with ambient temperatures. Thermal magnetic trip units always act to protect the conductors, safeguarding equipment under high ambient conditions and permitting higher safe loading under low ambient conditions. They do not trip if the overload is not dangerous, but they will trip instantly if there are heavy short-circuit currents.

Electronic trip units are increasingly replacing molded case circuit breakers with conventional thermal magnetic trip units. This is especially true for the larger frame sizes. The result is increased accuracy, repeatability and discrimination. Another major advantage is the option of built-in ground fault protection. Previously, with thermal magnetic breakers, a separate ground fault relay was used to trip the breaker with a shunt trip.

In general, electronic trip systems are composed of three component items. First, there is a current transformer (sensor) in each phase to monitor and reduce the current to the proper level for input into a printed circuit board. Second, there is a printed circuit board, which can be viewed as the brains of the system because it interprets input and makes a decision based on predetermined parameters. A decision to trip results in the circuit board initiating an output to the third component, a low power flux-transfer shunt trip, which trips the breaker. An external source of tripping power is not required.

Copyright © 2005 IEEE. All rights reserved.

Copyright The Institute of Electrical and Electronics Engineers, Inc.
Provided by IHS under license with IEEE
No reproduction or networking permitted without license from IHS
Not for Resale

Electronic circuitry has been changing and improving rapidly. Earlier electronic trip units used analog circuitry, which is considered the conventional approach. An analog device looks at all the points on a particular curve and responds to peak values. The analog device remains a strong contributor to circuit protection.

As the demand for more sophisticated systems has grown, so has the popularity of the microprocessor based trip unit. The use of a microprocessor not only provides additional capabilities, but it also allows the trip system to perform a number of standard functions. A microprocessor (digital device) looks at selected discrete points on a particular current wave and makes a summation of those discrete points, which results in a root mean square (RMS) value, in lieu of a peak value. The RMS value is sometimes referred to as the effective value. The result is a more realistic overall view of a given set of circumstances.

Because of tremendous advancements in trip technology, circuit breakers are no longer viewed as individual devices. A circuit breaker is expected to be a self-contained system performing many functions over and above its basic equipment protection duties.

Previously used for alternating current (AC) applications only, some electronic trip devices now may be used for a direct current (DC) application as long as that application is approved by the circuit breaker manufacturer on the rating label.

3.15 Circuit breaker selectivity

In a coordinated system, the molded case circuit breaker immediately upstream of the fault must open with subsequent fault clearance. This achieves circuit breaker selectivity. By this means only the faulted part of the power system will be isolated. All the other protective devices connected to the system should remain closed, keeping the remaining power system in operation. Selectivity reduces the duration of a fault and limits its possible damaging effect only to a part of the installation where the fault actually occurred. The service interruption is reduced to a minimum.

Figure 16 illustrates selectivity where circuit breaker “D” isolates the fault without disturbing the upstream circuit breakers “A, B, and C.”

Copyright © 2005 IEEE. All rights reserved.
Copyright The Institute of Electrical and Electronics Engineers, Inc.
Provided by IHS under license with IEEE
No reproduction or networking permitted without license from IHS
Not for Resale

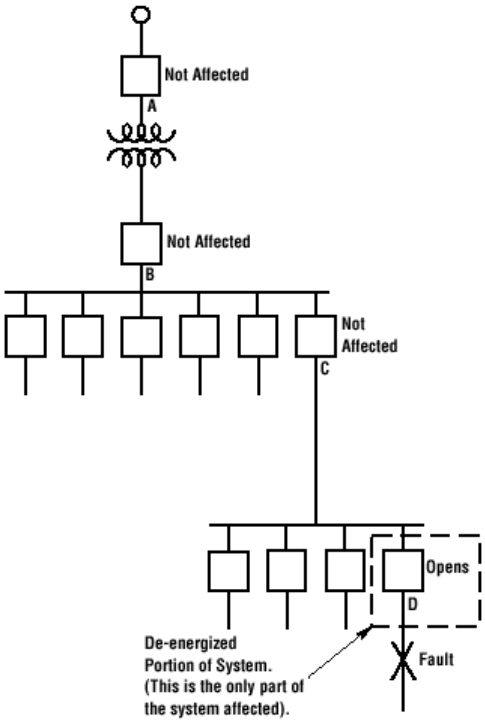

Figure 16—Circuit breaker selectivity

3.15.1 Instantaneous pickup

Instantaneous pickup is an adjustable value of current (approximately 2–10 times) where a trip action will take place immediately with no intentional time delay. This function is similar to the magnetic function of a thermal magnetic breaker.

3.15.2 Long-time pickup and delay

Long-time pickup (approximately 0.5–1.0 times) and delay (2 s to 24 s) are pre-selected values of current that a breaker will carry continuously for a predetermined period of time. Once the pickup point is reached and the timing cycle begins, a trip action will not take place until the time delay has been achieved. This function is similar to the bimetal effect in a thermal magnetic breaker as it reacts to overload conditions.

3.15.3 Short-time pickup and delay

This function is similar in operation to long time pickup and delay, except current values are higher and time frames are shorter. This function protects against low level short circuits and improves coordination with downstream devices (up to the instantaneous pickup setting).

3.15.4 Ground fault pickup and delay

The pickup function determines at what point a ground fault will be identified and the delay determines how long the trip action will be delayed after the fault has been identified.

Copyright © 2005 IEEE. All rights reserved.

Copyright The Institute of Electrical and Electronics Engineers, Inc.
Provided by IHS under license with IEEE
No reproduction or networking permitted without license from IHS
Not for Resale

NOTE—In the case of all pickups, the pickup value, which initiates the timing cycle, is maintained throughout the timing cycle for tripping to occur. If conditions change and the pickup value is not maintained, the tripping system resets in anticipation of another timing cycle.

3.15.5 Special calibrations and applications

Certain operating conditions and ambient temperatures will affect the operation of trip units. In some situations, a derating factor is applied and in other instances, it is necessary to recalibrate.

Electronic trip units are temperature insensitive over a wide range of temperatures. Because of this advantage, electronic trip units have replaced the need for special breakers to operate in unusual ambient conditions.

An ambient compensated breaker is specially calibrated to properly function in a specific, other than standard, ambient temperature.

4. Molded case circuit breaker safety considerations

Working on energized equipment should be avoided. Such work poses significant risks to both the workers and to the equipment that they are working on due to the possibility of electrocution, arc flash burns, loss of limbs, loss of hearing or permanent disability. Any mishap that causes personal injury almost always damages equipment. With appropriate planning of maintenance activities and facility operating schedules, de-energized work is almost always possible.

Despite efforts to reduce the number of electrical injuries, the rate at which they occur has remained fairly constant over the last several years. Federal OSHA has mandated specific procedures that are intended to reduce the number of electrical injuries by adopting NFPA 70E [B5]. NFPA 70E [B5] dictates the procedures that shall be followed whenever work is performed on energized electrical equipment. Anyone working on energized electrical equipment or supervising such work shall thoroughly understand and follow the requirements of NFPA 70E [B5].

5. Selection of molded case circuit breakers

Molded case circuit breakers are circuit protective devices that primarily perform two functions: (1) manual switching operation to open and close a circuit by means of a toggle handle and (2) automatic opening of the circuit under sustained overload and/or short-circuit conditions. Circuit breakers inherently provide the automatic protective function of opening the circuit under abnormal sustained overload or short-circuit conditions without the use of fuses. When a circuit breaker opens to clear a fault, the toggle handle goes to a TRIPPED position midway between the ON and OFF positions, thus clearly indicating that a circuit breaker has opened. When the cause of the fault has been removed, the circuit breaker may again be closed simply by moving the toggle handle to the RESET position and then moving the handle to the ON position.

Molded case circuit breakers are “trip free” in construction. This means that the circuit breaker contacts cannot be held closed against a fault condition. Molded case circuit breakers are designed to protect insulated conductors against unsafe overheating that would ultimately damage the insulation and conductor.

Molded case circuit breakers shall meet UL Standard 489 [B6]. UL Standard 489 [B6] makes provision for two classes of products: UL Standard 80-percent rated, and UL Standard 100-percent rated. The basis of these ratings for molded case and insulated case circuit breakers is as follows in 5.1 through 5.4.

Copyright © 2005 IEEE. All rights reserved.
Copyright The Institute of Electrical and Electronics Engineers, Inc.
Provided by IHS under license with IEEE
No reproduction or networking permitted without license from IHS
Not for Resale

5.1 Standard rated molded case circuit breakers

a) Standard molded case circuit breakers are rated to carry 100% of their nameplate current continuously in free air at 25 °C when cabled per Table 1.

b) Molded case circuit breakers marked 40 °C are rated to carry 100% of their nameplate current continuously in free air at 40 °C when cabled per Table 1.

c) Enclosed circuit breakers are rated to carry 100% of their nameplate current intermittently (up to 3 hours maximum), or 80% continuously, with the enclosure in a 25 °C ambient temperature, and when cabled per Table 1. The ambient temperature can be 40 °C for appropriately marked circuit breakers.

d) Group mounted circuit breakers calibrated for 25 °C might require derating of the circuit breaker and cable in room ambient temperatures other than 25 °C and with cable other than specified in Table 1.

Table 1—Wire and cable size by ampere rating[a]

Circuit breaker ampere rating	Copper conductor		Aluminum or copper clad aluminum conductor	
	Paralleled	Size	Paralleled	Size
15 or less	—	14 AWG	—	12 AWG
20	—	12 AWG	—	10 AWG
25	—	10 AWG	—	10 AWG
30	—	10 AWG	—	8 AWG
35	—	8 AWG	—	8 AWG
40	—	8 AWG	—	8 AWG
45	—	8 AWG	—	6 AWG
50	—	8 AWG	—	6 AWG
60	—	6 AWG	—	4 AWG
70	—	4 AWG	—	3 AWG
80	—	4 AWG	—	2 AWG
90	—	3 AWG	—	2 AWG
100	—	3 AWG	—	1 AWG
110	—	2 AWG	—	1.0 AWG
125	—	1 AWG	—	2.0 AWG
150	—	1.0 AWG	—	3.0 AWG
175	—	2.0 AWG	—	4.0 AWG
200	—	3.0 AWG	—	250 kcmil
225	—	4.0 AWG	—	300 kcmil
250	—	250 kcmil	—	350 kcmil
275	—	300 kcmil	—	500 kcmil
300	—	350 kcmil	—	500 kcmil
325	—	400 kcmil	2	4.0 AWG
350	—	500 kcmil	2	4.0 AWG
400	2	3.0 AWG	2	250 kcmil
450	2	4.0 AWG	2	300 kcmil

Copyright © 2005 IEEE. All rights reserved.

Copyright The Institute of Electrical and Electronics Engineers, Inc.
Provided by IHS under license with IEEE
No reproduction or networking permitted without license from IHS
Not for Resale

Table 1—Wire and cable size by ampere rating[a] *(continued)*

Circuit breaker ampere rating	Copper conductor		Aluminum or copper clad aluminum conductor	
	Paralleled	Size	Paralleled	Size
500	2	250 kcmil	2	350 kcmil
550	2	300 kcmil	2	500 kcmil
600	2	350 kcmil	2	500 kcmil
700	2	500 kcmil	3	350 kcmil
800	3	300 kcmil	3	400 kcmil
1000	3	400 kcmil	4	350 kcmil
			3	600 kcmil
1200	4	350 kcmil	4	500 kcmil
	3	600 kcmil		
1400	4	500 kcmil	5	500 kcmil
1600	5	400 kcmil	6	600 kcmil
	4	600 kcmil		
2000	6	400 kcmil	6	600 kcmil
	5	600 kcmil		
2500	8	400 kcmil	9	500 kcmil
	7	500 kcmil	8	600 kcmil
	6	600 kcmil	7	750 kcmil

[a]Circuit beakers are calibrated and rated for use with the following wire sizes by ampere rating based on 75 °C conductor.

5.2 100-Percent rated molded case circuit breakers

a) Specially labeled molded case circuit breakers are rated to carry 100% of their nameplate current continuously when they are in an enclosure with ventilation and volume as specified on the device. The size of the cable must be as specified in Table 1. The room ambient temperature shall not exceed 25 °C, or 40 °C if the circuit breaker is marked for that temperature, and the current flowing through the wire (which is connected to the breaker) shall not exceed a 75 °C. The wire insulation may be suitable for a 90 °C.

b) Room ambient temperatures other than 25 °C, cable other than specified in Table 1, or enclosure volume and/or ventilation other than specified on the devices may require derating of the system.

5.3 Voltage rating election

Molded case circuit breakers may have voltage ratings such as 240 volts ac, 480 volts ac, 600 volts ac, 250 volts dc, or they may have so-called “slash ratings” such as 120/240 volts ac, 480Y/277 volts ac, 600Y/347 volts ac, 125/250 volts dc.

Breakers with so-called “straight” voltage ratings (i.e., 240, 480, 600) may be applied in a circuit where the nominal rating between any two conductors does not exceed the breaker’s voltage rating.

Copyright © 2005 IEEE. All rights reserved.
Copyright The Institute of Electrical and Electronics Engineers, Inc.
Provided by IHS under license with IEEE
No reproduction or networking permitted without license from IHS
Not for Resale

Breakers with 120/240, 480Y/277, or 600Y/347 volt ratings can be applied only in solidly grounded systems where the voltage to ground does not exceed the lower voltage rating and the voltage between any two conductors does not exceed the higher value of the breaker rating.

5.4 Current ratings

Because molded case circuit breakers are designed to protect insulated cable, the characteristics of breakers are closely tied to the UL specified size and type of wire for each rating as well as the load characteristics. The following items should be considered when applying and using molded case circuit breakers:

a) Cable size shall be equal to or greater than that shown in Table 1. All molded case circuit breakers are to be used with 75 °C ampacity conductors. The use of 90 °C conductors is acceptable providing they are sized to the 75 °C ampacities. Using a lug marked "CuAl" does NOT make the breaker suitable for use with 90 °C conductors at 90 °C ampacity. Thermal current measuring systems (bimetals and fuses) incorporate a resistance element that generates heat at a rate proportional to the square of the current. The cable is used as a heat sink to control the temperature of the bimetal. Reducing the size of the conductor raises the temperature and the breaker will carry less current.

b) Ambient temperatures have an even wider effect on the rating of the breaker-cable system. High ambient temperatures not only affect the calibration of the breaker but also are capable of causing internal temperatures to exceed the temperature limits of the insulating materials. Cable may be adapted through the use of higher rated materials such as glass or mineral, but this is not possible with switching devices due to mechanical requirements and fabrication techniques. Low temperatures, on the other hand, substantially increase the current carrying ability of the system until other limiting factors occur, such as lubricant failure or binding due to differential contraction of parts. In general, the effect of ambient temperature on an ambient compensating breaker calibration looks like Figure 17.
Notice that the curve in Figure 17 specifies the ambient temperature of the air surrounding the breaker, not room temperature. To convert this information to room ambient, it is necessary to know the temperature rise of the equipment housing the circuit breaker. This includes factors for group mounting of devices, ventilation, solar insulation, other radiant heat sources, etc.

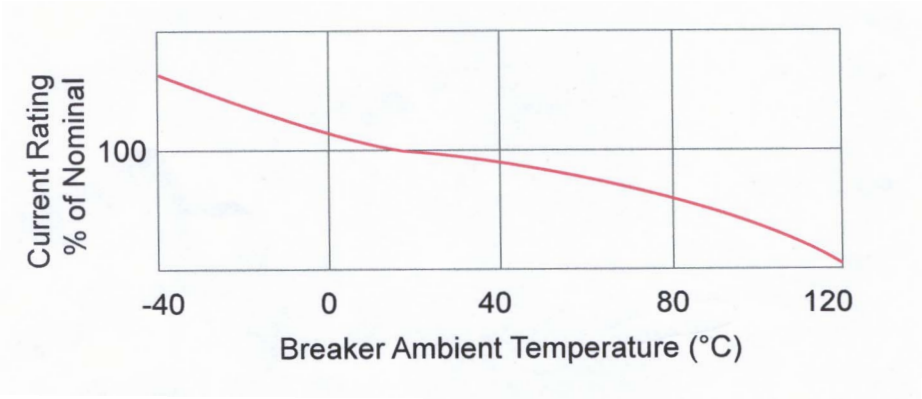

Figure 17—The affect of ambient temperature on the continuous current carrying ability of a molded case circuit breaker

c) System operating frequency also has a major effect on the rating and performance of molded case circuit breakers. Most circuit breakers may be directly applied at their published ratings on 50- or 60-Hertz systems, but molded case circuit breakers shall not be applied at other frequencies without the concurrence of the manufacturer.
Two separate effects occur at frequencies above 60 Hz depending on the method of current sensing. In thermal magnetic devices, the bimetal, which provides overload protection, responds accurately

Copyright © 2005 IEEE. All rights reserved.

Copyright The Institute of Electrical and Electronics Engineers, Inc.
Provided by IHS under license with IEEE
No reproduction or networking permitted without license from IHS
Not for Resale

to the applied current. However, the instantaneous element, which is a solenoid constructed of copper and steel, becomes hot. This raises the temperature of the breaker, thereby reducing the continuous current rating of the device. The instantaneous trip solenoid becomes hot because of the nature of its construction and materials. In addition to adding heat to the breaker, the instantaneous trip does not respond to current correctly. The higher the frequency, the less accurate the response.
At nominal system frequencies less than 50 Hz but above direct current, solid-state trip devices become inoperative due to sensor saturation. Thermal trip devices remain accurate while instantaneous trip solenoids lose accuracy. On direct current systems, solid-state trip units are completely inoperative, thermal trip units calibrate accurately, and instantaneous trip solenoids might or might not be accurate depending on the specific construction technique used.

d) Another factor to be considered is the altitude at which the breaker will be applied. The design altitude for molded case circuit breakers is 0 to 1.8288 km (6000 ft). At altitudes above 1.8288 km (6000 ft) the thin atmosphere affects the heat transfer of the breaker as well as its ability to interrupt short circuits. An additional derating of 4% is applied at altitudes from 1.8288 km (6000 ft) to 3.048 km (10 000 ft).

e) Load type and duty cycle shall also be considered in the application of molded case circuit breakers. Loads such as capacitors and electromagnets require a substantial continuous current derating factor if the breaker is normally used to switch the load. Group mounted devices require additional derating due to the lack of free air circulation around the devices.
With loads such as resistance welders, the breaker continuous current rating shall be no less than 125% of the welder 100% duty-cycle rating.
In general, where load protection in addition to cable protection is desired, the load characteristics and protection requirements need to be fully evaluated.

f) An additional factor that needs to be considered is a safety factor. If the circuit breaker is run at the current level derived from factors A through E continuously, it will be within its rating and the conductor ratings, but it will be on the verge of tripping, and any perturbation from nominal could cause the circuit breaker to trip. A safety factor of at least 10% should be applied to prevent possible nuisance tripping. Other conditions such as excessive load break operations, overload tripping, or severe load cycling can affect breaker life and should be factored into the rating.

5.5 Current rating selection

$$\text{Circuit breaker ampere rating } (I_p) = I_a ABCDEFG \quad (1)$$

where:

I_a = Actual full-load current or RMS current
A = Wire size factor
B = Ambient temperature rating factor
C = Frequency rating factor
D = Altitude rating factor
E = Load class rating factor
F = Safety factor
G = 1.0 for intermittent load or 1.25 for continuous load

5.6 Selection of circuit breaker current rating

Circuit breakers are primarily used to provide overload and short-circuit protection for insulated conductors. In this regard, the NEC [B1] requires that conductors be protected in accordance with their ampacities. Exceptions are listed in the NEC [B1] for certain specific applications or conditions including protection for conductors in motor circuits.

Copyright © 2005 IEEE. All rights reserved.
Copyright The Institute of Electrical and Electronics Engineers, Inc.
Provided by IHS under license with IEEE
No reproduction or networking permitted without license from IHS
Not for Resale

The size and type of conductors required for a given circuit are usually calculated by the consulting engineer or other specifying authority, and specified on the job plans. In these instances it is relatively simple to select a standard circuit breaker rating that matches the ampacity of the conductor. Where standard circuit breaker ratings do not correspond to the ampacity of the conductor, the NEC [B1] allows the next higher rating to be used where the overcurrent device rating is 800 amperes or less.

Example 1

Find the current rating, I_p, and load conductor size for a circuit breaker that will feed a 3Ø (three phase) 480 V ac heater drawing a total of 62 A at nominal 480 V. The heater will be on typically more than three hours. The panel board containing the molded case circuit breaker has an internal air temperature in the range of 36 ºC to 40 ºC. The breaker load side will be cabled with 75 ºC THHW insulated copper conductors.

$$I_p = I_a ABCDEFG$$

$$I_p = 62 \times 1 \times 1 \times 1 \times 1 \times 1 \times 1 \times 1.25 = 77.5 \text{ A}$$

The next higher standard overcurrent device rating may be selected for the computed 77.5 A conductor ampacity; thus an 80 A, 3 pole, 480 V ac circuit breaker is selected. Required 75 ºC insulated copper conductors must have an ampacity of 77.5 A and therefore must be #4 AWG copper per 2002 NEC Table 310.16.

Example 2

A 480 volts ac 3Ø (three phase) – 4-wire feeder breaker in a switchboard will serve a 225A 3Ø main breaker lighting panel board and a non-continuous 460 volts ac 100 horsepower squirrel cage induction motor used to run a ventilation fan. Determine the ampere rating of the switchboard feeder breaker and the size of 75 ºC THWN insulated copper conductors.

To determine the total load on the feeder breaker, the overcurrent protection device (molded case circuit breaker) must be sized no less than 100% of the non-continuous load plus 125% of the continuous load. The lighting is assumed to be a continuous load, requiring the 225 A to be multiplied by 1.25. The non-continuously running 100 horsepower fan motor's ampacity is 124 A.

The minimum cable ampacity and feeder breaker ampere rating is

$$225 \text{ A} \times 1.25 + 124 \text{ A} = 405.25 \text{ A} \quad (2)$$

Solution:

Step 1—The minimum feeder breaker ampere rating = (225 A × 1.25) + 124 A = 405.25 A.

The ampacity of the conductors does not correspond with the standard ampere rating of a molded case circuit breaker without overload trip adjustments above the breaker's rating. Because of this, the next larger size wire must be selected, so adjust the minimum standard size feeder breaker to 450 amperes.

Step 2—Select the feeder conductor size before de-rating by first summing the continuous and non-continuous loads.

The minimum cable ampacity = (225A × 1.25) + 124 A = 405.25 A.

Copyright © 2005 IEEE. All rights reserved.

Copyright The Institute of Electrical and Electronics Engineers, Inc.
Provided by IHS under license with IEEE
No reproduction or networking permitted without license from IHS
Not for Resale

Using a table of allowable ampacities of insulated conductors, such as Table 310.16 in the 2002 NEC, select the 75 ºC column. The minimum size Type THWN copper conductor that can supply a computed load of 405 amperes is 600 kcmil copper, which has a ampacity of 420 amperes.

Step 3—Apply the de-rating factors to the feeder conductor size. The neutral conductor is counted as a current carrying conductor because the major portion of the load consists of lighting. Therefore, this feeder circuit consists of four current carrying conductors in the same raceway. The NEC [B4] requires an 80% adjustment factor for four current carrying conductors in the same raceway. Using a table of allowable ampacities of insulated conductors, 600 kcmil Type THWN conductors are listed as having an ampacity of 420 amperes. The adjustment factors applied are as follows:

$$\text{Adjusted ampacity} = 420 \times 0.80 = 336 \text{ A} \quad (3)$$

Step 4—Revise the feeder conductor selection

A conductor with a computed load of 336 amperes is not allowed to be protected by a 450-ampere overcurrent protective device. A 900-kcmil THWN insulated conductor has an ampacity of 520 amperes when operating at 75 ºC.

$$\text{Adjusted ampacity} = 520 \times 0.80 = 416 \text{ A}$$

A conductor with a computed load of 416 amperes is allowed to be protected by a 450-ampere overcurrent protective device; however other factors may require using a larger conductor.

Select a 450 A breaker and either one 900 kcmil copper conductor per phase or two 250 kcmil copper conductors per phase. Note that use of two 250 kcmil conductors will require separate raceways; otherwise, derating to 0.70 for between four and seven conductors in a raceway will reduce their ampacity to 2 × 255 A × 0.70 or 357 A, which is less than the minimum required conductor ampacity. Verify that load side breaker lugs are rated for either of the conductor choices.

5.7 Interrupting rating

Interrupting rating is the highest current (expressed in rms symmetrical amperes) at rated voltage that a device is intended to interrupt under standard test conditions. The interrupting rating may vary with the applied voltage and is established by testing per UL.

The circuit breaker interrupting rating shall be equal to or greater than the amount of short-circuit current at that point in the system where the circuit breaker is applied. The circuit breaker interrupting rating shall be larger than the value of short-circuit current calculated in Clause 6 or Clause 7.

6. Estimated available fault current at transformer secondary

Table 2, Table 3, and Table 4 are provided as a way to estimate the maximum level of Symmetrical Faults at a transformer secondary, assuming an infinite amount of current is available at the transformer primary. More detailed calculations are required for an exact answer and these tables are presented for reference only.

To account for induction motor short-circuit current contribution, an industry accepted rule of thumb is to add 4 times the Full Load Current (FLC) of motors less than 50 hp and 5 times the FLC of motors greater than 50 hp (see The Buff Book, IEEE Std 242).

Equation (4) and Equation (5) are the equations that were used to calculate the values presented in Table 2, Table 3, and Table 4:

Copyright © 2005 IEEE. All rights reserved.
Copyright The Institute of Electrical and Electronics Engineers, Inc.
Provided by IHS under license with IEEE
No reproduction or networking permitted without license from IHS
Not for Resale

$$\text{Full Load Current} = \frac{(\text{Transformer kVA}) \times 1000}{(\text{Voltage}_{\text{line-to-line}}) \times 1.73} \quad (4)$$

Written in equation form:

$$I_{\text{FLC}} = \frac{S(1000)}{V_{\text{LL}}\sqrt{3}}$$

where

I_{FLC} = Full load current (A),
S = Apparent power (kVA),
V_{LL} = Line-to-line voltage (V).

$$\text{Available Symmetrical Fault Current} = \frac{(\text{Full Load Current}) \times 100\%}{\%\text{Impedance}} \quad (5)$$

Written in equation form:

$$I_{\text{AFC}} = \frac{I_{\text{FLC}}(100)}{Z\%}$$

where

I_{AFC} = Available symmetrical fault current (A),
$Z\%$ = Percent impedance.

Table 2—Three-phase transformers—208 VAC secondary

		Percent impedance						
		1.0%	**2.0%**	**3.0%**	**4.0%**	**5.0%**	**6.0%**	**7.0%**
kVA	**FLC**	**Maximum available fault current**						
30	83	8327	4164	2776	2082	1665	1388	1190
45	125	12 491	6245	4164	3123	2498	2082	1784
75	208	20 818	10 409	6939	5204	4164	3470	2974
100	278	27 757	13 879	9252	6939	5551	4626	3965
150	416	41 636	20 818	13 879	10 409	8327	6939	5948
225	625	62 454	31 227	20 818	15 613	12 491	10 409	8922
300	833	83 272	41 636	27 757	20 818	16 654	13 879	11 896
500	1388	138 786	69 393	46 262	34 697	27 757	23 131	19 827
750	2082	208 179	104 090	69 393	52 045	41 636	34 697	29 740
1000	2776	277 572	138 786	92 524	69 393	55 514	46 262	39 653

Copyright © 2005 IEEE. All rights reserved.

Copyright The Institute of Electrical and Electronics Engineers, Inc.
Provided by IHS under license with IEEE
No reproduction or networking permitted without license from IHS
Not for Resale

Table 3—Three-phase transformers—480 VAC secondary

		Percent impedance						
		1.0%	2.0%	3.0%	4.0%	5.0%	6.0%	7.0%
kVA	FLC	Maximum available fault current						
112.5	135	13 532	6766	4511	3383	2706	2255	1933
150	180	18 042	9021	6014	4511	3608	3007	2577
225	271	27 063	13 532	9021	6766	5413	4511	3866
300	360	36 084	18 042	12 028	9021	7217	6014	5155
500	600	60 141	30 070	20 047	15 035	12 028	10 023	8592
750	900	90 211	45 105	30 070	22 553	18 042	15 035	12 887
1000	1200	120 281	60 141	40 094	30 070	24 056	20 047	17 183
1500	1800	180 422	90 211	60 141	45 105	36 084	30 070	25 775
2000	2400	240 563	120 281	80 188	60 141	48 113	40 094	34 366

Table 4—Three-phase transformers—600 VAC secondary

		Percent impedance						
		1.0%	2.0%	3.0%	4.0%	5.0%	6.0%	7.0%
kVA	FLC	Maximum available fault current						
100	96	9623	4811	3208	2406	1925	1604	1375
150	144	14 434	7217	4811	3608	2887	2406	2062
225	217	21 651	10 825	7217	5413	4330	3608	3093
300	289	28 868	14 434	9623	7217	5774	4811	4124
500	481	48 113	24 056	16 038	12 028	9623	8019	6873
750	722	72 169	36 084	24 056	18 042	14 434	12 028	10 310
1000	962	96 225	48 113	32 075	24 056	19 245	16 038	13 746
1500	1443	144 338	72 169	48 113	36 084	28 868	24 056	20 620
2000	1925	192 450	96 225	64 150	48 113	38 490	32 075	27 493
2500	2406	240 563	120 281	80 188	60 141	48 113	40 094	34 366
3000	2887	288 675	144 338	96 225	72 169	57 735	48 113	41 239

7. Simplified method to calculate available fault current at transformer secondary

In order to properly select a three-phase molded case circuit breaker, it is necessary to calculate the magnitude of the available short-circuit current or the prospective fault current at the point of application. Rigorous and accurate analysis is required to ensure compliance with the NEC and the National Electrical Safety Code® (NESC®) (Accredited Standards Committee C-2) [B1]; however, at times it is beneficial to quickly determine the approximate available fault current magnitude.

The methods presented here are not substitutes for short-circuit studies. The reader is referred to The Red Book [B2], The Blue Book, and The Buff Book for a more complete method of analysis. If resources are not

Copyright © 2005 IEEE. All rights reserved.
Copyright The Institute of Electrical and Electronics Engineers, Inc.
Provided by IHS under license with IEEE
No reproduction or networking permitted without license from IHS
Not for Resale

available to properly evaluate the required molded case circuit breaker interrupt rating, then the following simplified methods may be applied to conservatively estimate the symmetrical RMS fault currents for three-phase bolted faults in radial systems. After the available short-circuit current has been established, a molded case circuit breaker with an interrupting rating greater than the estimated fault current may be selected.

This clause presents several methods of calculating available short-circuit currents for three-phase bolted faults in radial systems without local generation. The first is the easiest and most simple method and, as would be expected, the least accurate. Each successive method presented becomes more complex by adding additional details, resulting in greater accuracy. Examples using the calculations follow each method's description. If these methods are applied, and a short-circuit value is obtained that is larger than the interrupting rating of commercially available molded case circuit breakers, or if the required interrupting rating is greater than the short-circuit current rating of the switchgear, panel, motor control center, or equipment to which the molded case circuit breaker is to be installed, then a formal short-circuit study and molded case circuit breaker evaluation must be performed by a qualified person.

7.1 METHOD 1: Simple approximation

The simple approximation presented below is based on first calculating the transformer "let through" or Available Fault Current (AFC), adding connected motor contribution, and then multiplying that value by 1.62, which is the worst case asymmetric offset multiplying factor (MF) to conservatively account for varying X/R ratios used by testing agencies that list molded case circuit breakers (see The Blue Book). Please note the 1.62 multiplying factor is to conservatively account for varied laboratory test methods. If the actual X/R ratio for the point of application is known, a lower multiplying factor may be considered (see The Blue Book).

Step 1:

Calculate the transformer Available Fault Current (AFC) (I_{FT}) or refer to tables such as those presented in Clause 6:

$$\text{Available Short-Circuit Current Through Transformer in Symmetrical RMS Amps} = \frac{\text{VA Rating of Transformer}}{\text{Transformer Nameplate Impedance} \times \sqrt{3}}$$

(Written as a decimal)

$$I_{FT} = \frac{S}{Z \times \sqrt{3} \times V} \tag{6}$$

where:

I_{FT} = available short-circuit current through transformer, symmetrical RMS

S = VA rating of the transformer

Z = transformer nameplate impedance written as a decimal (i.e., 5.75 % is written as.0575)

V= line to line voltage at secondary

1.732 is an accurate enough estimate of $\sqrt{3}$ and may be used in place of $\sqrt{3}$.

Step 2:

Add the induction motor contribution. Add up the full load current for motors below 50 hp and multiply by 4. Add up the full load current for motors greater than 50 hp and multiply by 5.

Copyright © 2005 IEEE. All rights reserved.

Copyright The Institute of Electrical and Electronics Engineers, Inc.
Provided by IHS under license with IEEE
No reproduction or networking permitted without license from IHS
Not for Resale

Step 3:

Add the motor contribution from Step 2 to the AFC (I_{FT}) calculated in Step 1.

Step 4:

Multiply the result from Step 3 by the MF 1.62 to obtain the adjusted value of I_{FT}. If the actual X/R ratio is known, then use the appropriate MF from (see The Blue Book).

Step 5:

Select a molded case circuit breaker with an interrupt rating greater than the result from Step 4.

Example 1:

Given a 12 kV-480/277 V, 1000 kVA three-phase transformer with nameplate impedance, *Z*, equal to 5%, feeding, among other loads, two 50 hp motors (60 amperes FLC each) and one 100 hp motor (114 amperes FLC), what is the available fault current at the 480 V bus?

Step 1:

Determine transformer AFC using Equation (6) or tables in Clause 6:

$$I_{FT} = \frac{S}{Z \times \sqrt{3} \times V}$$

$$I_{FT} = \frac{1000 \times 1000}{0.05 \times \sqrt{3} \times 480}$$

I_{FT} = 24 056 amperes (From Table 3 in Clause 6, I_{FT} = 24 056 amperes)

Step 2:

Determine induction motor contribution (I_{FM}):

50 hp and below: $I_{FM < 50}$ = Sum of FLC × 4 (7)

$I_{FM<50}$ = 2 motors × 60 amp (FLC) × 4

$I_{FM<50}$ = 480 amperes

50 hp and above: $I_{FM>50}$ = Sum of FLC × 5

$I_{FM>50}$ = 1 motor × 114 amperes (FLC) × 5

$I_{FM>50}$ = 570 amperes

Total $I_{FM} = I_{FM < 50} + I_{FM>50}$ = 480 + 570 = 1050 amperes

Copyright © 2005 IEEE. All rights reserved.
Copyright The Institute of Electrical and Electronics Engineers, Inc.
Provided by IHS under license with IEEE
No reproduction or networking permitted without license from IHS
Not for Resale

Step 3:

To find the total fault current, (I_F), add motor contribution (I_{FM}) to transformer AFC (I_{FT}):

$I_F = I_{FT} + I_{FM}$

$I_F = 24\ 056 + 1050$

$I_F = 25\ 106$ amperes

Step 4:

Multiply I_F by 1.62 to account for X/R test values.

Adjusted $I_F = 1.62 \times 25\ 106$

Adjusted $I_F = 40\ 672$ amperes

Step 5:

Select a molded case circuit breaker with an interrupting rating greater than 40 672 amperes.

7.2 METHOD 2: Accounting for cable between transformer and molded case circuit breaker

Arriving at more accurate approximations of the short-circuit magnitude requires an understanding of the sources of fault current and the effect the impedance between those sources and the fault location have on the fault current magnitude.

The first step for Method 2 is to calculate the total impedance between the transformer primary and the molded case circuit breaker installation. Transformers and cables are the most significant contributors to the impedance. Impedance due to other equipment such as bus duct and circuit breaker contacts is usually ignored. Completing Step 1 will require combining the transformer nameplate percent impedance, which is based on the transformer kVA rating, and the cable impedance, which is usually expressed in ohms. The ohmic values for cables are available from multiple sources including protective device manufacturer catalogs, cable catalogs, many IEEE publications, and the NEC [B1]. These same sources are often used when checking cable ampacity and doing voltage drop calculations.

The second step for Method 2 is to determine how much fault current the total impedance will allow when a fault occurs downstream of the molded case circuit breaker (similar to Method 1) add induction motor contribution, and then multiply the result by a 1.62 multiplication factor (MF) to account for varying molded case circuit breaker laboratory test methods. The remaining are the same as for Method 1.

Step 1:

Calculate impedance between the transformer primary and the molded case circuit breaker, Z_{TOTAL}.

$$Z_{TOTAL} = Z_{TRANS} + Z_{CABLE} \quad (8)$$

Z_{TOTAL} = total impedance between transformer primary and fault downstream of the molded case circuit breaker

Copyright © 2005 IEEE. All rights reserved.

Copyright The Institute of Electrical and Electronics Engineers, Inc.
Provided by IHS under license with IEEE
No reproduction or networking permitted without license from IHS
Not for Resale

Z_{TRANS} = transformer nameplate impedance [percent (%Z) divided by 100]

Z_{CABLE} = total cable impedance between transformer secondary and fault = $(L \times Z_c) \times \frac{S}{V_2}$ (9)

where:

L = length of cable
Z_c = cable impedance per unit length
S = transformer kVA rating
V = rated transformer secondary line to line voltage

Step 2:

Determine how much current the total impedance will allow for a fault downstream of the breaker.

$$\text{Adjusted } I_F = I_F = \left(\frac{S}{Z_{TOTAL} \times \sqrt{3} \times V}\right) \quad (10)$$

Example 2:

A 12 kV-480/277 V, 1000 kVA three-phase transformer with nameplate impedance, Z, equal to 5%, feeds a molded case circuit breaker, via 30.48 m (100 ft) of 2/0, three conductor cable in metallic conduit. The transformer also has two 50 hp motors (60 amperes FLC each) and one 100 hp motor (114 amperes FLC) that can contribute fault current to the molded case circuit breaker. What is the available fault current for a three-phase fault at the molded case circuit breaker line side? This set of calculations will be performed twice. Once using U.S. Customary Units and once using SI or Metric Units.

Using U.S. Customary Units

Step 1:

$$Z_{TOTAL} = Z_{TRANS} + Z_{CABLE}, \text{ and } Z_{CABLE} = (L \times Z_c) \times \left(\frac{S}{V_2}\right), \quad (11)$$

where:

L = length of cable in ft,
Z_c = cable impedance per ft,
S = transformer kVA rating,
V = rated transformer secondary line-to-line voltage.

therefore by substitution,

$$Z_{TOTAL} = Z_{TRANS} + (L \times Z_c) \times \left(\frac{S}{V_2}\right)$$

In this example, $Z_{TRANS} = 0.05$, $L = 100$, $Z_c = \frac{0.11 \text{ ohm}}{1000 \text{ ft}}$, $S = 1000$ kVA, and $V = 480$, so

$$Z_{TOTAL} = 0.05 + \left(100 \times \left(\frac{0.11}{1000}\right)\right) \times \left(\frac{1000 \text{ kVA}}{480^2}\right)$$

$$Z_{TOTAL} = 0.05 + \left(100 \times \left(\frac{0.11}{1000}\right)\right) \times \left(\frac{1000^2 \text{ VA}}{480^2}\right)$$

$$Z_{TOTAL} = 0.098$$

Copyright © 2005 IEEE. All rights reserved.
Copyright The Institute of Electrical and Electronics Engineers, Inc.
Provided by IHS under license with IEEE
No reproduction or networking permitted without license from IHS
Not for Resale

Step 2:

Determine how much current the total impedance will allow for a fault at the line terminals of the breaker.

$$I_F = \left(\frac{S}{Z_{TOTAL} \times \sqrt{3} \times V}\right) \quad (12)$$

$$I_F = \left(\frac{1000 \text{ kVA}}{0.098 \times \sqrt{3} \times 480}\right)$$

I_F = 12 274 amperes

Step 3:

Determine induction motor contribution:

37.3 kw (50 hp) and below: $I_{FM<50}$ = Sum of FLC × 4 (13)

$I_{FM<50}$ = 2 motors × 60 amp (FLC) × 4

$I_{FM<50}$ = 480 amperes

37.3 kw (50 hp) and above: $I_{FM>50}$ = Sum of FLC × 5

$I_{FM>50}$ = 1 motor × 114 amp (FLC) × 5

$I_{FM>50}$ = 570 amperes

Total $I_{FM} = I_{FM<37.3 \text{ kw (50 hp)}} + I_{FM>37.3 \text{ kw (50 hp)}}$ = 480 + 570 = 1050 amperes (14)

Step 4:

Add motor contribution (I_{FM}) to transformer AFC (I_{FT}):

$$I_F = I_{FT} + I_{FM} \quad (15)$$

I_F = 12 274 + 1050

I_F = 13 324 amperes

Step 5:

Multiply I_F by 1.62 to account for X/R test values.

Adjusted I_F = 1.62 × 13 324

Adjusted I_F = 21 585 amperes

Step 6:

Select a molded case circuit breaker with an interrupting rating greater than 21 585 amperes.

Copyright © 2005 IEEE. All rights reserved.

Copyright The Institute of Electrical and Electronics Engineers, Inc.
Provided by IHS under license with IEEE
No reproduction or networking permitted without license from IHS
Not for Resale

Using SI or Metric units

Step 1:

$$Z_{TOTAL} = Z_{TRANS} + Z_{CABLE}, \text{ and } \quad Z_{CABLE} = (L \times Z_c) \times \left(\frac{S}{V_2}\right), \tag{11}$$

where:

L = length of cable,
Z_c = cable impedance per unit of length,
S = transformer kVA rating,
V = rated transformer secondary line-to-line voltage.

therefore by substitution,

$$Z_{TOTAL} = Z_{TRANS} + (L \times Z_c) \times \left(\frac{S}{V_2}\right)$$

In this example, $Z_{TRANS} = 0.05$, L = 30.55 m, $Z_c = \frac{0.36 \text{ ohm}}{1000 \text{ m}}$, S = 1000 kVA, and V = 480, so

$$Z_{TOTAL} = 0.05 + \left(30.48 \times \left(\frac{0.36}{1000}\right)\right) \times \left(\frac{1000 \text{ kVA}}{480^2}\right)$$

$$Z_{TOTAL} = 0.05 + \left(30.48 \times \left(\frac{0.36}{1000}\right)\right) \times \left(\frac{1000^2 \text{ VA}}{480^2}\right)$$

$Z_{TOTAL} = 0.098$

Step 2:

Determine how much current the total impedance will allow for a fault at the line terminals of the breaker.

$$I_F = \left(\frac{S}{Z_{TOTAL} \times \sqrt{3} \times V}\right) \tag{12}$$

$$I_F = \left(\frac{1000 \text{ kVA}}{0.098 \times \sqrt{3} \times 480}\right)$$

I_F = 12 274 amperes

Step 3:

Determine induction motor contribution:

37.3 kw (50 hp) and below: I_{FM} = Sum of FLC × 4 (13)

I_{FM} = 2 motors × 60 amp (FLC) × 4

I_{FM} = 480 amperes

Copyright © 2005 IEEE. All rights reserved.
Copyright The Institute of Electrical and Electronics Engineers, Inc.
Provided by IHS under license with IEEE
No reproduction or networking permitted without license from IHS
Not for Resale

37.3 kw (50 hp) and above: $I_{FM>50}$ = Sum of FLC × 5

I_{FM} = 1 motor × 114 amp (FLC) × 5

I_{FM} = 570 amperes

Total $I_{FM} = I_{FM<37.3\ kw\ (50\ hp)} + I_{FM>37.3\ kw\ (50\ hp)} = 480 + 570 = 1050$ amperes (14)

Step 4:

Add motor contribution (I_{FM}) to transformer AFC (I_{FT}):

$I_F = I_{FT} + I_{FM}$ (15)

I_F = 12 274 + 1050

I_F = 13 324 amperes

Step 5:

Multiply I_F by 1.62 to account for X/R test values.

Adjusted I_F = 1.62 × 13 324

Adjusted I_F = 21 585 amperes

Step 6:

Select a molded case circuit breaker with an interrupting rating greater than 21 585 amperes.

8. Procedures for field testing and determining the remaining life of molded case circuit breakers

The determination of the remaining life in a molded case circuit breaker is dependent on many factors. This clause will help the user determine the end of the useful life of a circuit breaker. There are two points that cannot be over stressed when determining when a molded case circuit breaker must be replaced. They are as follows:

1) When in doubt about the condition of a circuit breaker, replace it. A circuit breaker replaced at a convenient time is very inexpensive compared to the cost of an unscheduled circuit breaker failure.
2) NEVER reuse a molded case circuit breaker that has been opened.

Working with energized electrical equipment is inherently dangerous. All work or testing on equipment that is energized shall only be performed by qualified electrical workers following the safety procedures outlined in NFPA 70E, STANDARD FOR ELECTRICAL SAFETY REQUIREMENTS FOR EMPLOYEE WORK-PLACES.[B5] FAILURE TO FOLLOW THESE PROCEDURES CAN RESULT IN SIGNIFICANT PROPERTY DAMAGE, SERIOUS INJURY OR LOSS OF LIFE. The precautions set forth herein, and in NFPA 70E [B5] and other applicable safety guides, assist in minimizing the inherent dangers of working on energized electrical equipment, but do not guarantee safety.

Copyright © 2005 IEEE. All rights reserved.

Copyright The Institute of Electrical and Electronics Engineers, Inc.
Provided by IHS under license with IEEE
No reproduction or networking permitted without license from IHS
Not for Resale

The following photos are of typical molded circuit breakers that have reached the end of their life. If a molded case circuit breaker is discovered that looks like any of the following photos, it shall be immediately taken out of service and replaced.

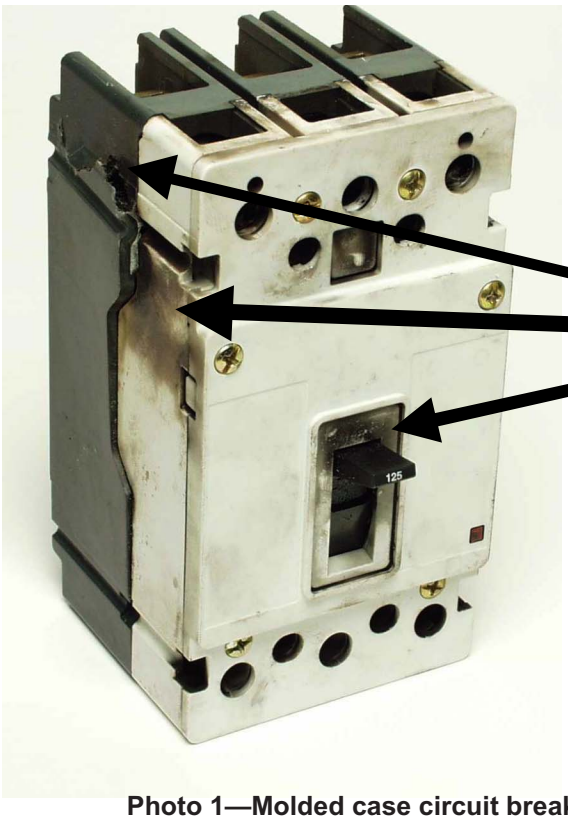

Photo 1—Molded case circuit breaker with a cracked and burned case

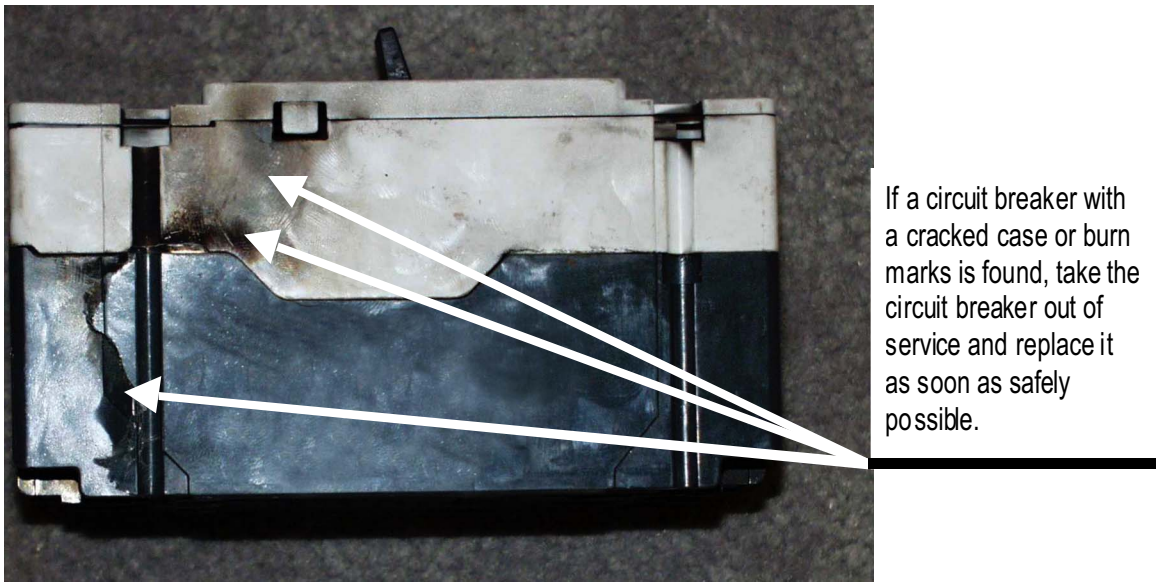

Photo 2—Molded case circuit breaker with a burned and cracked case

Copyright © 2005 IEEE. All rights reserved.
Copyright The Institute of Electrical and Electronics Engineers, Inc.
Provided by IHS under license with IEEE
No reproduction or networking permitted without license from IHS
Not for Resale



Photo 3—Molded case circuit breaker showing overheating

If a blistered case is found, take the circuit breaker out of service and replace it as soon as safely possible.



Photo 4—Molded case circuit breaker with a blistered case

Copyright © 2005 IEEE. All rights reserved.

Copyright The Institute of Electrical and Electronics Engineers, Inc.
Provided by IHS under license with IEEE
No reproduction or networking permitted without license from IHS
Not for Resale

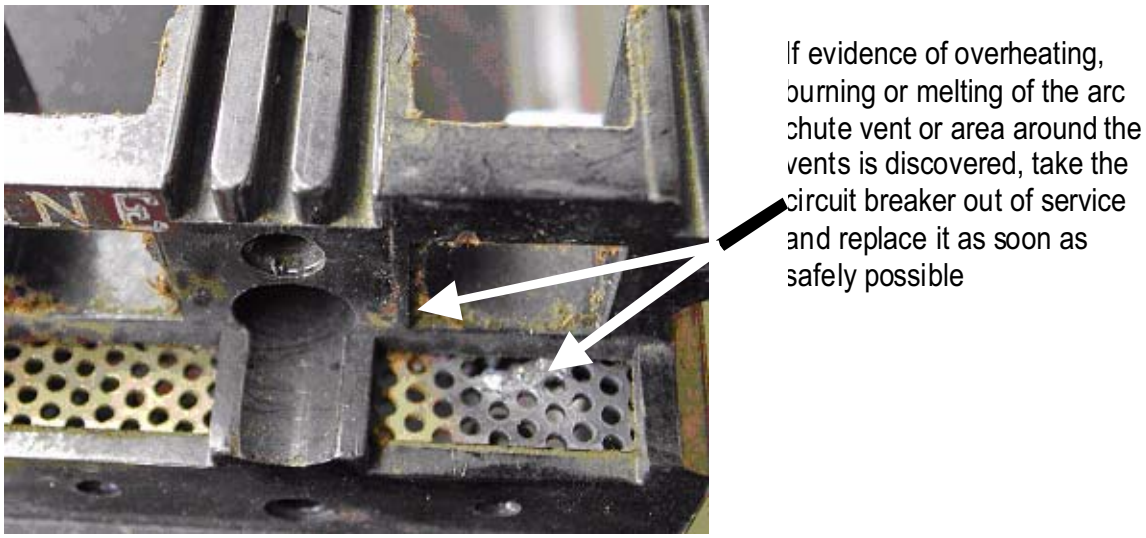

Photo 5—Molded case circuit breaker with melted and burnt arc chute vents

The life expectancy of molded case circuit breakers is dependent on many factors. The conditions that affect the life of circuit breakers are as follows:

— The number of fault clearing operations of the breaker
— How often the breaker is turned on and off
— The humidity and ambient temperature where the breaker is located
— Corrosive, abrasive, or conductive dust or particles in the atmosphere around the breaker
— Loose connections of the power leads on the breaker that result in over heating of connections
— Abnormal occurrences such as fire or explosion near the breaker

Appropriately selected and maintained circuit breakers will provide many years of trouble free service. Under normal conditions, properly applied molded case circuit breakers require maintenance only to verify the integrity of the installation. However, when inspection is necessary to determine an abnormal condition or determine the possibility of damage, it might be necessary to perform maintenance on a circuit breaker. This clause is intended to assist the user in performing required maintenance and in assessing the remaining life of a circuit breaker.

If a circuit breaker has interrupted a fault or its condition is of concern, the following tests should be performed to determine its condition and remaining life.

8.1 Rated current hold in test

NOTE—For best results, the circuit breaker should be removed from its equipment for this test.[4]

The purpose of this test is to verify that a molded case circuit breaker will carry its rated current. It should be performed if the circuit breaker has been tripping under normal load conditions.

[4]Notes in text, tables, and figures are given for information only and do not contain requirements needed to implement the standard.

Copyright © 2005 IEEE. All rights reserved.
Copyright The Institute of Electrical and Electronics Engineers, Inc.
Provided by IHS under license with IEEE
No reproduction or networking permitted without license from IHS
Not for Resale

The test current can be supplied from a commercially available circuit breaker test set or from an AC current transformer.

NOTE—If the circuit breaker is equipped with an undervoltage trip release, the undervoltage trip release shall be energized from a separate source of power to allow proper operation of the circuit breaker.

The circuit breaker shall be tested with the operating mechanism set to the ON position, in open air, with all poles connected in series by copper conductors not less than 1.2192 m (4 ft) in length. The test leads shall be sized to safely supply the test current with a nominal temperature rise.

The test shall be performed at room ambient temperature approximately 25 °C (77 °F). The power supply shall be adjusted to deliver rated current until the circuit breaker temperature stabilizes. Temperature stabilization usually occurs within one hour for breakers rated 100 amperes or less but will take several hours for breakers of higher rating. Stabilization can be verified by taking three successive temperature measurements at intervals of 10–20 minutes between measurements at the same location and under the same temperature conditions on one or more of the circuit breaker connectors by using a non-contact infra-red thermometer.

The circuit breaker should not trip during the test. If it does trip, reset the breaker and turn it ON again. Continue to monitor the temperature until it stabilizes. If the breaker continues to trip, it has reached the end of its life and shall be replaced.

8.2 Exposed face and lug temperature check

The purpose of this test is to determine if the insulated face (cover) of the circuit breaker has been exposed to excessive temperature.

CAUTION

Severe burns can result from high temperatures and arc flash. Do not hold hands or fingers in contact with surfaces if excessive heat is felt. This test shall only be performed by a qualified electrical worker using appropriate personal protective equipment.

With the circuit breaker in normal use carrying normal load current, and with the door (if any) giving access to the breaker operating handle open, check the exposed accessible insulated face of the breaker and the adjacent, surrounding, dead front surfaces of the enclosure for their approximate operating temperatures using an infrared non-contact temperature measuring instrument. If a significantly elevated temperature above 54.4 °C (130 °F) is found, the cause of the elevated temperature must be found. The most likely cause is a loose connection.

8.3 Mechanical operation tests

WARNING

Hazardous voltages in electrical equipment can cause severe injury or death. Lock out and tag out the power supplying this equipment before performing any testing.

The purpose of this test is to verify that the circuit breaker mechanism is operating freely. If the circuit breaker is equipped with an undervoltage trip, the undervoltage trip release shall be energized from a separate power source to allow proper operation. The circuit breaker handle should operate smoothly without binding or reverting to the reset position. Using a low range ohmmeter, preferably with a micro ohm range and able to measure resistance by using at least $\frac{1}{2}$ amp direct current, verify that all circuit breaker contacts are OPEN when the handle is in the OFF position and CLOSED when the handle is in the ON position. The breaker shall be replaced if:

a) The contacts are not open with the breaker in the tripped or OFF position.

Copyright © 2005 IEEE. All rights reserved.

Copyright The Institute of Electrical and Electronics Engineers, Inc.
Provided by IHS under license with IEEE
No reproduction or networking permitted without license from IHS
Not for Resale

b) The contacts are not closed with the breaker in the ON position.

c) The breaker does not reset.

d) The mechanical trip provisions (if provided) do not trip the breaker.

8.4 Insulation resistance test

WARNING
Hazardous voltages in electrical equipment can cause severe injury or death. Lock out and tag out the power supplying this equipment before performing any testing.

NOTE—The circuit breaker shall be removed from the equipment for this test.

The purpose of the insulation resistance test is to determine the integrity of the insulation between line and load terminals, between poles, and between each pole and ground. To perform the test use an insulation tester that operates at least 500 V DC. A unit that operates at 1000 V DC will provide more accurate information and should be used if available. If the circuit breaker is equipped with an undervoltage trip release, the undervoltage trip release shall be energized to allow proper operation. This test shall be conducted with the circuit breaker mounted to simulate its installed state in actual use. All exposed metal parts except line, load, and accessory terminals should be electrically connected to a metal base plate. Using an insulation resistance tester, apply a direct-current voltage of at least 500 V to determine the resistance.

Voltage is to be applied:

a) Between line and load terminals of each individual pole with the circuit breaker in the OFF position

b) Between terminals of adjacent poles with the circuit breaker in the ON position

c) From line terminals to the metal base plate with the circuit breaker in the ON position

All resistance readings must be at least one megohm for each measurement. If any reading is less than one megohm, the circuit breaker has reached the end of its life and shall be replaced.

8.5 Individual pole resistance test (millivolt drop)

NOTE—The circuit breaker shall be removed from the equipment for this test.

The purpose of this test is to assess the electrical integrity of connections and contacts in a molded case circuit breaker. The millivolt drop between circuit breaker poles can vary significantly because of the variability in the extremely low resistance of the electrical contacts and connectors. Such variations do not necessarily predict unacceptable performance and should not be used as the sole criteria for determination of acceptability.

This test shall be performed with a 24-volt or less direct current power supply capable of supplying the rated current of the circuit breaker. For circuit breakers rated higher than 500 amperes, the power supply should be capable of delivering no less than 500 amperes.

Because of the general lack of availability of equipment capable of performing this test, industry has adopted versions of this test that use equipment that can only generate a very small amount of current. If such equipment is used to measure circuit breaker pole resistance, then the following steps should be used to perform the test:

a) Measure the resistance of each pole of the circuit breaker.

Copyright © 2005 IEEE. All rights reserved.
Copyright The Institute of Electrical and Electronics Engineers, Inc.
Provided by IHS under license with IEEE
No reproduction or networking permitted without license from IHS
Not for Resale

b) If the resistance reading of one pole of a multi-pole circuit breaker is more than twice the resistance reading of any of the other poles, and the readings are high [see 1) below], then open and close the circuit breaker several times.

   1) To determine if the readings are high, multiply the measured resistance by the circuit breaker nameplate current. If the result of this calculation gives an answer of several hundred millivolts or more, then the readings are high.

c) If the reading is high, the test must be performed using equipment capable of producing higher currents.

NOTE—If the circuit breaker is equipped with an undervoltage trip release, the undervoltage trip release shall be energized to allow proper operation.

The test is performed as follows:

— Operate the breaker to the OFF position.
— Lock out and tag out all power to the breaker to electrically isolate it from all other circuits.
— Open the enclosure. Wearing appropriate electrical personal protective equipment, verify that there is no voltage on the incoming conductors (and on control power conductors, if present) and between these conductors and ground.
— Remove the breaker from the enclosure.
— Apply test current across a pole equal to the breaker rating (or 500 amperes minimum for breakers rated in excess of 500 amperes).
— Record the millivolt drop and the test current. Do not maintain current for more than 1 min.
— De-energize the test circuit. Manually operate the breaker to the OFF and then ON positions.
— Repeat the test for all of the remaining circuit breaker poles.

The results of the test will vary according to the breaker frame type, ampere rating and manufacturer. The manufacturer should be consulted to determine the maximum allowable voltage drop. If the average test values of any pole of the breaker exceed the maximum allowable voltage drop, (typically several hundred millivolts) the circuit breaker is at the end of its life and shall be replaced.

8.6 Inverse-time overcurrent trip test

NOTE—The circuit breaker shall be removed from the equipment for this test.

The purpose of this test is to verify the operation of the inverse-time overcurrent tripping function of a circuit breaker. This test is not applicable to instantaneous only breakers or molded case switches.

Circuit breakers with electronic trip units are often equipped with integral test provisions for verifying the functional operation of the trip unit. Where integral test provisions are not included, separate test devices are frequently available from the circuit breaker manufacturer.

These tests shall be conducted on individual circuit breaker poles using a test current of 300% of the circuit breaker's rated current. This test current has been chosen because it is relatively easy to attain, and the wattage per pole is low enough that the transfer of heat into the adjacent poles is minor and does not appreciably affect the test results. The test current may be supplied from a commercially available circuit breaker test set or from an AC current transformer.

Conduct the test on each pole of the circuit breaker by connecting the line and load terminals of that pole to the test equipment by copper conductors not less than 1.2192 m (4 ft) in length. The test leads shall be sized to safely supply the test current with a nominal temperature rise.

Copyright © 2005 IEEE. All rights reserved.

Copyright The Institute of Electrical and Electronics Engineers, Inc.
Provided by IHS under license with IEEE
No reproduction or networking permitted without license from IHS Not for Resale

NOTE—If the circuit breaker is equipped with an undervoltage trip release, the undervoltage trip release shall be energized from an external power source to allow proper operation.

The test is performed as follows:

- Operate the breaker to the OFF position.
- Lock off and tag out all power to the breaker to electrically isolate it from all other circuits.
- Remove the breaker from the enclosure.
- Connect one pole (or two poles for electronic trip circuit breakers equipped with ground fault protection) to the test current source.
- With the circuit breaker being tested in the closed position, quickly adjust the test current to 300% of the circuit breaker rating.
- With the test current at the correct value, start timing.
- Record trip time.
- Repeat the test on each of the other individual poles. [Where ground fault protection (GFP) is supplied, repeat the steps using two additional combinations of poles.] Tests on adjacent poles shall be made at no less than five minute intervals. For circuit breakers with thermal trip elements, wait at least 20 min before repeating tests on the same pole. For circuit breakers with electronic RMS trip elements, consult the manufacturer's published instructions for required intervals between tests.

If the intervals are shortened, subsequent tests can result in premature tripping. If more accurate results are required, the between-test intervals should be extended to permit the temperature of the circuit breaker to return to that of the surrounding ambient air. For information regarding testing of an electronic trip circuit breaker’s ground fault trip element, consult the manufacturer’s published instructions.

The circuit breaker shall trip within the times shown in the typical circuit breaker trip curves in Figure 18 or Figure 19. These curves are only typical, and the exact circuit breaker under test can have a different time-current characteristic trip. The exact curve for most molded case circuit breakers is available from the manufacturer’s web page. If the circuit breaker does not trip within these maximum time limits shown in its specific trip curve, the molded case circuit breaker has reached the end of its life and shall immediately be removed from service.

Copyright © 2005 IEEE. All rights reserved.
Copyright The Institute of Electrical and Electronics Engineers, Inc.
Provided by IHS under license with IEEE
No reproduction or networking permitted without license from IHS
Not for Resale

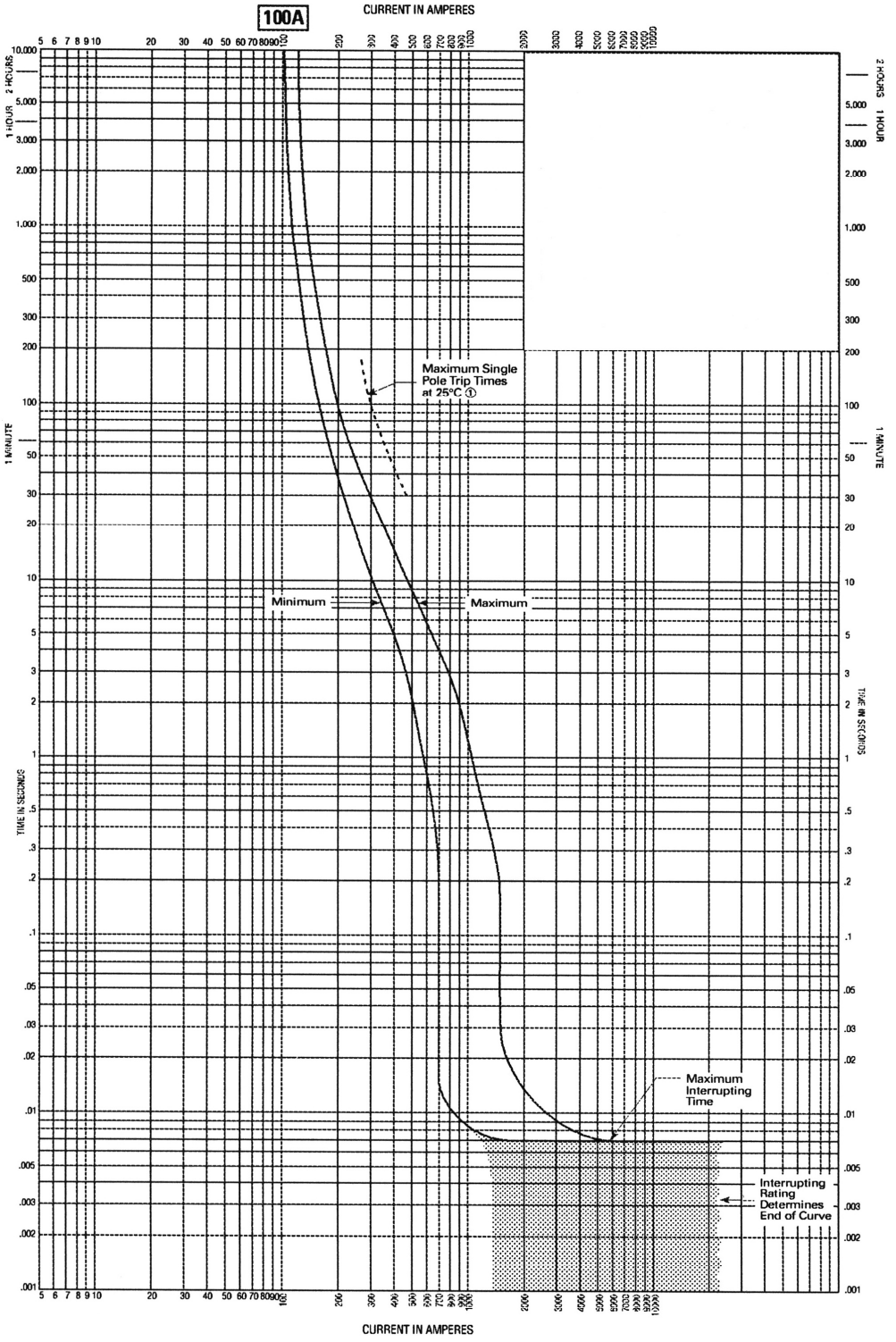

Figure 18—Typical time-current curve for a 15 to150 amp molded case circuit breaker (A 100 amp breaker curve is shown)

Copyright © 2005 IEEE. All rights reserved.

Copyright The Institute of Electrical and Electronics Engineers, Inc.
Provided by IHS under license with IEEE
No reproduction or networking permitted without license from IHS
Not for Resale

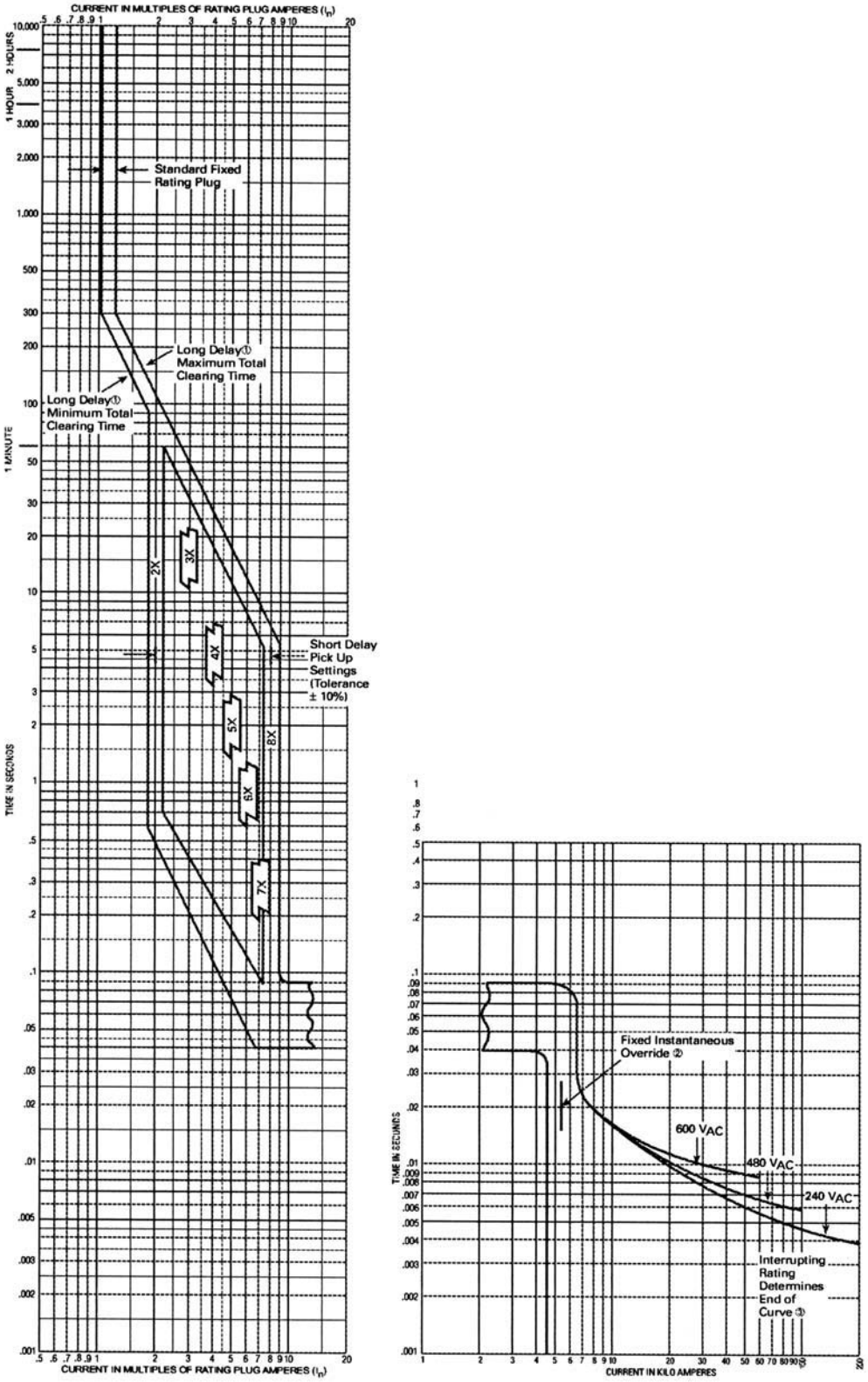

Figure 19—Typical time-current curve for an adjustable trip, 400 to 1000 A molded case circuit breaker
(The curve on the left shows current in multiples of plug rating)

Copyright © 2005 IEEE. All rights reserved.
Copyright The Institute of Electrical and Electronics Engineers, Inc.
Provided by IHS under license with IEEE
No reproduction or networking permitted without license from IHS
Not for Resale

8.7 Instantaneous overcurrent trip test

NOTE—The circuit breaker shall be removed from equipment for this test.

The purpose of this test is to verify the operation of the instantaneous trip functions under field test conditions.

The test equipment used for the inverse-time overcurrent trip test is used for this test.

The instantaneous trip characteristics of the circuit breaker can be influenced by stray magnetic fields. The test setup shall be made in such a way that the fields caused by the test equipment itself, by steel enclosures, by mounting plates, or by the conductors to the circuit breaker do not affect the test results. The wave shape of the current can also influence results. Because of the affect of non-sinusoidal current on the accuracy of the test results, an adequately sized current source is required.

Circuit breakers with electronic trip units are often equipped with integral test provisions to verify the functional operation of the trip unit. When integral test provisions are not included in the circuit breaker, separate test devices are frequently available from the circuit breaker manufacturer.

NOTE—If the circuit breaker is equipped with an undervoltage trip release, the undervoltage trip release shall be energized from an external power source, to allow proper operation.

The test is conducted using one of two methods. The methods are the run-up and the pulse methods. Note the following:

a) For the run-up method of testing a pointer-stop ammeter is recommended.

b) For the pulse method of testing, a calibrated image-retaining oscilloscope or a high-speed sampling rate digital ammeter (capable of accurately measuring a half-cycle pulse) is required instead of an ammeter.

The test is performed as follows:

— Lock out and tag out all power to the breaker to electrically isolate it from all other circuits.

— Using appropriate electrical personal protective equipment, verify that there is no voltage on the incoming conductors (and on control power conductors, if present) and between these conductors and ground in order to positively confirm that the equipment is de-energized.

— Remove the breaker from the enclosure.

Run-Up Method

— Connect one pole of the test breaker to the test equipment.

— Adjust the trip setting to the desired position, and operate the breaker to the ON position.

— Set the current control to a point where approximately 60% of the marked trip setting will flow when the circuit is energized.

— Turn the power ON and increase the current until the circuit breaker trips. The recommended time for increasing the current is between two and five seconds. If the circuit breaker does not open within five seconds, the supply circuit shall be turned OFF to prevent damage to the test equipment.

The Run-Up method requires operator skill in recognizing the relationships between actual current and the meter indication. If the current is increased too slowly, tripping can be caused by the time delay element, especially if more than one test is run. If the current is increased too rapidly, an erroneous current reading can result because the meter lags behind the actual current value due to meter damping. This problem can be overcome and the accuracy of this method can be improved by the use of a calibrated oscilloscope to read the current level at the time the breaker trips.

Copyright © 2005 IEEE. All rights reserved.

Copyright The Institute of Electrical and Electronics Engineers, Inc.
Provided by IHS under license with IEEE
No reproduction or networking permitted without license from IHS Not for Resale

Pulse Method

This method is more accurate than the run-up method, if done properly. However, it is subject to an error introduced by a distortion of the pulse current.

The pulse method involves the following steps:

— Connect one pole of the test breaker to the test equipment.

— Adjust the trip setting to the desired position, and operate the breaker to the ON position.

— Apply a pulse of current, approximately 5 to 10 cycles in duration, and at a level approximately 5% below the lower tolerance limit specified below for the breaker setting. The breaker should not trip.

— Apply a pulse of current, approximately 5 to 10 cycles in duration and at a level equivalent to the high tolerance limit specified in Table 5 below. The breaker should trip.

Table 5—Instantaneous trip tolerances for field testing of circuit breakers

		Tolerances of manufacturers' published trip range	
Breaker type	Tolerances of settings	High side	Low side
Adjustable	+40% –25%	—	—
Non-adjustable	—	+25%	–25%

If the results differ significantly from those values, reexamine the test circuit and circuit breaker mounting arrangements. If there are no apparent problems with the test circuit or mounting arrangements, repeat the test. If the same results are obtained, the circuit breaker is at the end of its life and shall be replaced.

8.8 Accessory devices

Molded case circuit breakers can be equipped with several accessories such as:

a) Shunt trip

b) Undervoltage and/or overvoltage trips

c) Remote opening or closing

d) Auxiliary contacts

e) Remote communications

f) Local and remote indication of many electrical parameters

Because of the manufacturer's specific requirements of testing these features, the manufacturer's application and instruction information shall be consulted to properly test the accessories.

Additional information on circuit breaker testing can be obtained from NEMA Standards Publication AB 4 [B3].

Copyright © 2005 IEEE. All rights reserved.
Copyright The Institute of Electrical and Electronics Engineers, Inc.
Provided by IHS under license with IEEE
No reproduction or networking permitted without license from IHS
Not for Resale

Annex A

(informative)

Bibliography

[B1] Accredited Standards Committee C-2, National Electrical Safety Code® (NESC®).[5]

[B2] IEEE Std 141™-1993 (R1999), IEEE Recommended Practice for Electric Power Distribution for Industrial Plants (IEEE Red Book™).

[B3] NEMA Standards Publication AB 4: Guidelines for Inspection and Preventive Maintenance of Molded Case Circuit Breakers Used in Commercial and Industrial Applications.

NOTE—This document is distributed freely by NEMA on their web page.

[B4] NFPA 70-2002: National Electrical Code® (NEC®).[6]

[B5] NFPA 70E, 2004 Edition: Electrical Safety in the Workplace.

[B6] UL Standard 489, Molded-Case Circuit Breaker, Molded Case Switches, and Circuit Breaker Enclosures.

[5]The NESC is available from the Institute of Electrical and Electronics Engineers, Inc., 445 Hoes Lane, Piscataway, NJ 08854, USA (http://standards.ieee.org/).

[6]The NEC is published by the National Fire Protection Association, Batterymarch Park, Quincy, MA 02269, USA (http://www.nfpa.org). Copies are also available from the Institute of Electrical and Electronics Engineers, Inc., 445 Hoes Lane, Piscataway, NJ 08854, USA (http://standards.ieee.org/).

Copyright © 2005 IEEE. All rights reserved.

Copyright The Institute of Electrical and Electronics Engineers, Inc.
Provided by IHS under license with IEEE
No reproduction or networking permitted without license from IHS
Not for Resale