IEEE Trial Use Recommended Practice for Thermal Cycle Testing of Form-Wound Stator Bars and Coils for Large Generators

Sponsor
Electric Machinery Committee
of the
IEEE Power Engineering Society

Reaffirmed 23 September 2004
Approved 3 July 1996

IEEE Standards Board

Abstract: A test method to determine the relative ablility of high-voltage, form-wound stator bars and coils of large rotating machines to resist deterioration due to rapid heating and cooling resulting from machine load cycling is described.
Keywords: delamination, form-wound stator bars and coils, similar design bar/coil, slot section, virgin bar/coil, thermal cycle testing

The Institute of Electrical and Electronics Engineers, Inc.

345 East 47th Street, New York, NY 10017-2394, USA

Copyright © 1996 by the Institute of Electrical and Electronics Engineers, Inc.

All rights reserved. Published 1996. Printed in the United States of America.

ISBN 1-55937-759-3

No part of this publication may be reproduced in any form, in an electronic retrieval system or otherwise, without the prior written permission of the publisher.

Copyright The Institute of Electrical and Electronics Engineers, Inc.
Provided by IHS under license with IEEE
No reproduction or networking permitted without license from IHS

Not for Resale

IEEE Standards documents are developed within the IEEE Societies and the Standards Coordinating Committees of the IEEE Standards Board. Members of the committees serve voluntarily and without compensation. They are not necessarily members of the Institute. The standards developed within IEEE represent a consensus of the broad expertise on the subject within the Institute as well as those activities outside of IEEE that have expressed an interest in participating in the development of the standard.

Use of an IEEE Standard is wholly voluntary. The existence of an IEEE Standard does not imply that there are no other ways to produce, test, measure, purchase, market, or provide other goods and services related to the scope of the IEEE Standard. Furthermore, the viewpoint expressed at the time a standard is approved and issued is subject to change brought about through developments in the state of the art and comments received from users of the standard. Every IEEE Standard is subjected to review at least every five years for revision or reaffirmation. When a document is more than five years old and has not been reaffirmed, it is reasonable to conclude that its contents, although still of some value, do not wholly reflect the present state of the art. Users are cautioned to check to determine that they have the latest edition of any IEEE Standard.

Comments for revision of IEEE Standards are welcome from any interested party, regardless of membership affiliation with IEEE. Suggestions for changes in documents should be in the form of a proposed change of text, together with appropriate supporting comments.

Interpretations: Occasionally questions may arise regarding the meaning of portions of standards as they relate to specific applications. When the need for interpretations is brought to the attention of IEEE, the Institute will initiate action to prepare appropriate responses. Since IEEE Standards represent a consensus of all concerned interests, it is important to ensure that any interpretation has also received the concurrence of a balance of interests. For this reason, IEEE and the members of its societies and Standards Coordinating Committees are not able to provide an instant response to interpretation requests except in those cases where the matter has previously received formal consideration.

Comments on standards and requests for interpretations should be addressed to:

Secretary, IEEE Standards Board
445 Hoes Lane
P.O. Box 1331
Piscataway, NJ 08855-1331
USA

Note: Attention is called to the possibility that implementation of this standard may require use of subject matter covered by patent rights. By publication of this standard, no position is taken with respect to the existence or validity of any patent rights in connection therewith. The IEEE shall not be responsible for identifying all patents for which a license may be required by an IEEE standard or for conducting inquiries into the legal validity or scope of those patents that are brought to its attention.

Authorization to photocopy portions of any individual standard for internal or personal use is granted by the Institute of Electrical and Electronics Engineers, Inc., provided that the appropriate fee is paid to Copyright Clearance Center. To arrange for payment of licensing fee, please contact Copyright Clearance Center, Customer Service, 222 Rosewood Drive, Danvers, MA 01923 USA; (508) 750-8400. Permission to photocopy portions of any individual standard for educational classroom use can also be obtained through the Copyright Clearance Center.

Copyright The Institute of Electrical and Electronics Engineers, Inc.
Provided by IHS under license with IEEE
No reproduction or networking permitted without license from IHS
Not for Resale

Introduction

(This introduction is not part of IEEE Std 1310-1996, IEEE Recommended Practice for Thermal Cycle Testing of Form-Wound Stator Bars and Coils for Large Generators.)

Peaking duty and pump storage hydrogenerators, synchronous condensers, and gas turbine generators are generally subject to load cycling. This load cycling creates shear stress between copper and the groundwall insulation of the stator winding that can result in the delamination of the groundwall, and under certain circumstances, into the puncture of the insulation.

This standard provides a test procedure that can be performed within a reasonable amount of time for accelerated thermal aging of production, prototype, or similar design bars/coils under laboratory conditions. The effects of this accelerated thermal aging on the bars/coils would provide some indication of the thermal aging of the stator winding of generators subject to cyclic duty.

Participants in the Working Group that prepared IEEE Std 1310-1996 are as follows:

Chaman L. Kaul, *Chair*

Edward A. Boulter	Steven Lindholm	R. H. Reder
S. E. Cherukupalli	Hartmut Meyer	Howard Sedding
Robert E. Draper	William M. McDermid	Greg Stone
Franklin T. Emery	John B. McMillan	John D. Taylor
Gary C. Griffith	G. Harold Miller	James E. Timperly
Alan M. Iverson	Charles Millet	David Train
J. Langer	Beant Nindra	Richard F. Weddleton
James F. Lau	M. S. Rana	Daniel I. Young, Jr.

The following persons were on the balloting committee:

Edward J. Adophson	James J. Grant	Beant S. Nindra
Dana K. Arndt	Bal K. Gupta	William B. Penn
Roy L. Balke	Lyle Klataske	Charles M. Rowe
E. A. Boulter	Terrence J. Lorenz	Greg C. Stone
Robert E. Draper	William M. McDermid	James E. Timperly
Franklin T. Emery	G. Harold Miller	Richard F. Weddleton
Brian E. B. Gott	Osman M. Nassar	Daniel I. Young, Jr.

Copyright The Institute of Electrical and Electronics Engineers, Inc.
Provided by IHS under license with IEEE
No reproduction or networking permitted without license from IHS
Not for Resale

When the IEEE Standards Board approved this standard on 3 July 1996, it had the following membership:

Donald C. Loughry, *Chair* **Richard J. Holleman,** *Vice Chair*
Andrew G. Salem, *Secretary*

Gilles A. Baril
Clyde R. Camp
Joseph A. Cannatelli
Stephen L. Diamond
Harold E. Epstein
Donald C. Fleckenstein
Jay Forster*
Donald N. Heirman
Ben C. Johnson
E. G. "Al" Kiener
Joseph L. Koepfinger*
Lawrence V. McCall
L. Bruce McClung
Marco W. Migliaro
Mary Lou Padgett
John W. Pope
Jose R. Ramos
Arthur K. Reilly
Ronald H. Reimer
Gary S. Robinson
Ingo Rüsch
John S. Ryan
Chee Kiow Tan
Leonard L. Tripp
Howard L. Wolfman

*Member Emeritus

Also included are the following nonvoting IEEE Standards Board liaisons:

Satish K. Aggarwal
Alan H. Cookson
Chester C. Taylor

Lisa S. Young
IEEE Standards Project Editor

Copyright The Institute of Electrical and Electronics Engineers, Inc.
Provided by IHS under license with IEEE
No reproduction or networking permitted without license from IHS
Not for Resale

Contents

CLAUSE PAGE

1. Overview 1

1.1 Scope 2
1.2 Purpose 2

2. References 2

3. Definitions 4

4. Thermal cycling test description 4

4.1 Test objects 4
4.2 Method of heating 4
4.3 Method of cooling 4
4.4 Temperature cycle and schedule 5

5. Thermal cycling test setup 6

5.1 Quantity of bars/coils required for testing 6
5.2 Positioning and setting up bars/coils for test 6
5.3 Temperature criteria, measurement, and control 8

6. Bar/coil preparation 9

7. Diagnostic tests during thermal cycling 10

7.1 Electrical proof test 10
7.2 Dissipation factor and tip-up measurements 10
7.3 Partial discharge measurements 10
7.4 Physical measurements 11
7.5 Tap test 11
7.6 Surface resistivity 11

8. Post-thermal cycle tests 12

8.1 Proof tests 12
8.2 Breakdown or voltage endurance test 12
8.3 Dissection 13

9. Preparation of test report 14

10. Bibliography 14

ANNEX

Annex A (normative) Sample calculation 15

Annex B (normative) Alternate test procedure 17

Annex C (normative) Decisions required by manufacturer/purchaser/testing facility 18

--`,,,`,,-`-`,,`,,`,`,,`---

Copyright The Institute of Electrical and Electronics Engineers, Inc.
Provided by IHS under license with IEEE
No reproduction or networking permitted without license from IHS Not for Resale

IEEE Recommended Practice for Thermal Cycle Testing of Form-Wound Stator Bars and Coils for Large Generators

1. Overview

In some applications, large rotating machines are subjected to rapid transitions from low power to full power, and vice versa. For example, hydrogenerators (peaking duty and pumped storage), synchronous condensers, and gas turbine generators are often raised from idle to full power in a matter of minutes, are operated at full power for hours, and then are rapidly reduced to zero output. This load cycling leads to rapid temperature changes within the stator winding.

Increasing the machine output from no-load to full-load causes the stator current to increase from zero to full-load current. This current raises the temperature of the stator winding copper conductors due to I^2R (copper) losses. As the temperature increases the copper will expand, especially in the axial direction. The longer the stator bar (or coil), the greater will be the total expansion of the copper. The high-voltage groundwall insulation operates at lower temperature than the copper, and has a lower coefficient of thermal expansion. Therefore, the thermally-induced expansion of the insulation is less than the copper. The difference in expansion is greater when the machine power level is rapidly changed, since thermal inertia of the stator iron causes the insulation temperature to lag behind the copper temperature. The difference in expansion between the insulation and the copper creates a shear stress within the insulated bar/coil. In particular, during the manufacturing process, a shear stress between the copper and the insulation of the bar/coil is formed as the bar/coil cools from its groundwall curing temperature. When the bar/coil is heated, the shear stress relaxes; when it cools, the shear stress increases.

If the bond between the copper and the insulation is not adequate, the copper may separate from the insulation. This results in the formation of voids between the insulation and the copper that may permit relative movement of the copper strands/turns, leading to abrasion of the insulation. Also, voids can develop between the layers of the groundwall insulation as a result of delamination. In high-voltage bars/coils, these voids can lead to partial discharges, and, under certain circumstances, to puncture of the insulation.

The test procedure described in this recommended practice is intended to simulate this thermal cyclic aging mechanism under controlled conditions. The mechanism is accelerated under the test procedure to give meaningful results in a reasonable amount of time. The test is performed on production, prototype, or similar design bars/coils that are not planned for subsequent use in a winding, since the test produces aging of the insulation.

Copyright The Institute of Electrical and Electronics Engineers, Inc.
Provided by IHS under license with IEEE
No reproduction or networking permitted without license from IHS
Not for Resale

Interpretation of test results depends on the analysis of the diagnostic and post-thermal cycle test data and/or comparison of the data to past results on the same insulation system. The slot sections of stator bars/coils similar to those that have performed well under diagnostic and post-thermal cycle tests are expected to withstand load cycling duty better than slot sections similar to those that have tested poorly.

Note that this test procedure is not intended to evaluate the relative performance of the end-winding or the effects on the thermal cyclic aging mechanism, if any, caused by the methods used to tighten the bar/coil in the stator core slot or the methods used to support the end-winding. Also, there is no hold period at the maximum or minimum temperature as exists in a generator, since this would greatly complicate the temperature-control scheme. Other thermal cyclic aging mechanisms of abrasion of the coil by the core iron and cracking of insulation at the slot exit are not addressed. Including a core model, slot filler materials, and the end-winding support structure would greatly increase the cost and complexity of the test. At the time of the preparation of this recommended practice, a Working Group of the International Electrotechnical Commission (IEC) was working on a test procedure that included the core model for thermal cycling testing. Those interested may refer to this IEC document, when available.

1.1 Scope

This procedure is intended for bars/coils for rotating machines rated 11 kV or more at 50 Hz or 60 Hz that are subjected to many transitions from no-load to full-load current during normal operations, and where rapid load variations are typical. Only the thermal cyclic degradation within the groundwall insulation and/or the conductor package and delamination of the groundwall insulation from the conductor are addressed by this test.

The procedure is applicable to the following machines:

— Indirectly cooled combustion turbine generators
— Indirectly cooled pumped storage or peaking load hydrogenerators
— Indirectly cooled synchronous condensers

No pass/fail criteria are presented; rather, the test results on a variety of stator bars and coils are compared. Pass/fail criteria may be established by users of this recommended practice.

1.2 Purpose

A test method to determine the relative ability of high-voltage form-wound stator bars and coils of large rotating machines to resist deterioration due to rapid heating and cooling resulting from machine load cycling is described. The test procedure is primarily intended for machines where the stator windings are indirectly cooled by air. This procedure provides a recommended practice for performance of thermal cycle testing of form-wound stator bars and coils without the use of simulated core. Since thermal cycling tests will result in aging of the insulation of the bar or coil, prototype or spare bars or coils obtained from a normal production run must be used in the test.

Thermal cycle testing of bars and coils confined in a simulated core, that would simulate the effects of the core, would require different parameters and therefore is not covered by this procedure.

2. References

ASTM D 149-93a, Standard Test Methods for Dielectric Breakdown Voltage and Dielectric Strength of Solid Electrical Insulating Materials at Commercial Power Frequencies.[1]

ASTM D 229-91, Standard Test Methods for Rigid Sheet and Plate Materials Used for Electrical Insulation.

[1]ASTM publications are available from the American Society for Testing and Materials, 100 Barr Harbor Drive, West Conshohocken, PA 19428-2959, USA.

Copyright The Institute of Electrical and Electronics Engineers, Inc.
Provided by IHS under license with IEEE
No reproduction or networking permitted without license from IHS Not for Resale

ASTM D 257-93, Standard Test Methods for DC Resistance or Conductance of Insulating Materials.

ASTM D 352-92, Standard Test Methods for Pasted Mica Used in Electrical Insulation.

ASTM D 494-91, Standard Test Method for Acetone Extraction of Phenolic Molded or Laminated Products.

ASTM D 619- 92, Standard Test Methods for Vulcanized Fibre Used for Electrical Insulation.

ASTM D 790-92, Standard Test Methods for Flexural Properties of Unreinforced and Reinforced Plastics and Electrical Insulating Materials.

ASTM D 1868-93, Standard Test Method for Detection and Measurement of Partial Discharge (Corona) Pulses in Evaluation of Insulation Systems.

ASTM D 2344-84 (1989), Standard Test Method for Apparent Interlaminar Shear Strength of Parallel Fiber Composites by Short-Beam Method.

ASTM D 3846-93, Standard Test Method for In-Plane Shear Strength of Reinforced Plastics.

ASTM D 5023-93, Standard Test Method for Measuring the Dynamic Mechanical Properties of Plastics Using Three Point Bending.

ASTM D 5026-93, Standard Test Method for Measuring the Dynamic Mechanical Properties of Plastics in Tension.

ASTM E 831-93, Standard Test Method for Linear Thermal Expansion of Solid Materials by Thermomechanical Analysis.

ASTM E 1131- 93, Standard Test Method for Compositional Analysis by Thermogravimetry.

ASTM E 1356-91, Standard Test Method for Glass Transition Temperatures by Differential Scanning Calorimetry or Differential Thermal Analysis.

ASTM E 1545-93, Standard Test Method for Glass Transition Temperatures by Thermomechanical Analysis.

IEEE Std 4-1995, IEEE Standard Techniques for High-Voltage Testing (ANSI). [2]

IEEE Std 100-1992, The New IEEE Standard Dictionary of Electrical and Electronics Terms (ANSI).

IEEE Std 118-1978 (Reaff 1992), IEEE Standard Test Code for Resistance Measurements (ANSI).

IEEE Std 286-1975, IEEE Recommended Practice for Measurement of Power-Factor Tip-Up of Rotating Machinery Stator Coil Insulation.[3]

IEEE Std 434-1973 (Reaff 1991), IEEE Guide for Functional Evaluation of Insulation Systems for Large High-Voltage Machines (ANSI).

IEEE Std 522-1992, IEEE Guide for Testing Turn-to-Turn Insulation on Form-Wound Stator Coils for Alternating-Current Rotating Electric Machines (ANSI).

IEEE Std 1043-1989, IEEE Recommended Practice for Voltage-Endurance Testing of Form-Wound Bars and Coils (ANSI).

---

[2]IEEE publications are available from the Institute of Electrical and Electronics Engineers, 445 Hoes Lane, P.O. Box 1331, Piscataway, NJ 08855-1331, USA.

[3]IEEE Std 286-1975 has been withdrawn; however, copies can be obtained from Global Engineering, 15 Inverness Way East, Englewood, CO 80112-5704, USA, (303) 792-2181. A working group is revising this standard; when updated, the latest revision shall apply.

Copyright The Institute of Electrical and Electronics Engineers, Inc.
Provided by IHS under license with IEEE
No reproduction or networking permitted without license from IHS Not for Resale

3. Definitions

3.1 similar design bar/coil: A bar/coil of the same design and manufacture using the same materials and processes as the actual production bar/coil, except that it may be longer in the slot section, and/or larger in the copper and/or groundwall cross section than the actual production bar/coil. The variance in the slot section length and the cross section of the 'similar design bar/coil' and the actual production bar/coil must be identified prior to the start of the thermal cycling test.

3.2 slot section: The portion of the stator bar/coil that, after installation in the rotating electric machine, is enclosed in the stator core slot. The outer surface of the slot section of bars/coils is treated with semiconducting (or conducting) materials, commonly referred to as semiconducting (or conducting) tapes or paints.

3.3 virgin bar/coil: A new, completely manufactured bar/coil with all armor tapes and coatings that, except for any semiconducting (or conducting) rubber coating, would have been installed in the stator core, but is now used in the thermal cycle tests.

4. Thermal cycling test description

4.1 Test objects

For valid comparisons, all of the test objects should be virgin prototype or production bars/coils of the same design and manufacture, or by prior agreement a similar design (see clause 5), as the bars/coils to be used in the actual machine for which the evaluation is being made. The thermal cycling test shall be carried out on the entire bar or coil, complete with all armor tapes and coatings, but excluding semiconductive (or conductive) rubber coatings.

4.2 Method of heating

The preferred method of heating is by circulating either power frequency or dc current through series-connected bars/coils. The power supplies used should be adequately rated in order to ensure that the specified heating rate can be achieved on at least the minimum number of test pieces. For coil samples, series connection of strands is permitted, if necessary, as long as the specified heating rate is maintained. Series connection of strands increases the impedance of the test object and lowers the source current requirement, however, a higher voltage power supply will be necessary.

Oven heating is not consistent with this recommended practice because it will not produce a sufficient temperature gradient across the groundwall insulation.

4.3 Method of cooling

Forced air shall be used for cooling the bar/coil. The capacity of the cooling unit used must be sufficient to ensure that the rate of cooling is similar to the rate of rise of temperature. In order to maintain uniformity of temperature along the length of the bar/coil, the air should be directed perpendicular to the surface of the long axis of the bar/coil. One approach is illustrated in figure 1. Air flow along the long axis of the coil may result in uneven cooling and therefore may not maintain uniformity of the temperature over the length of the test object.

Copyright The Institute of Electrical and Electronics Engineers, Inc.
Provided by IHS under license with IEEE
No reproduction or networking permitted without license from IHS Not for Resale

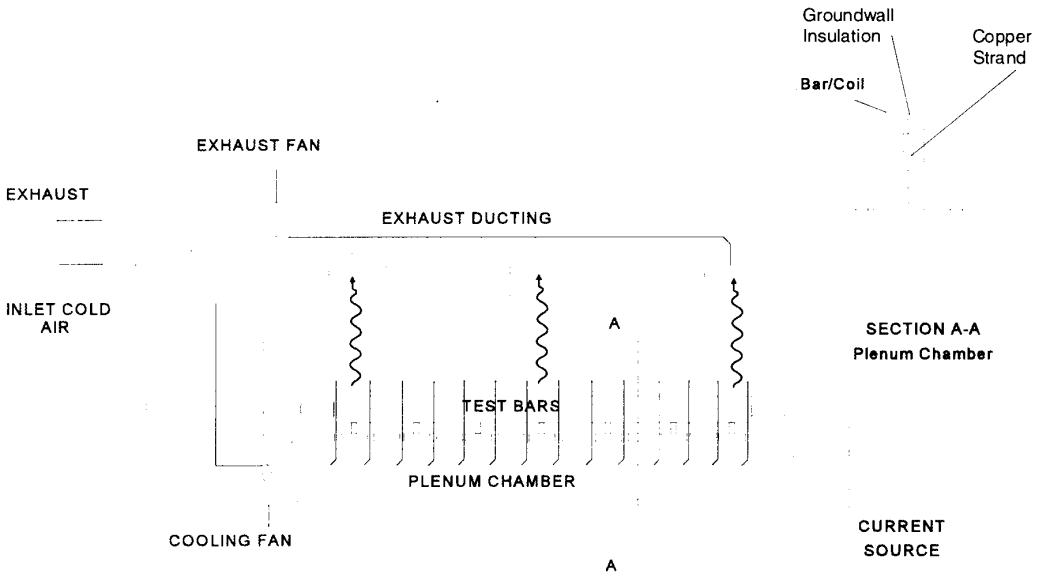

Figure 1—Plenum setup for thermal cycling tests

4.4 Temperature cycle and schedule

The heating and cooling cycle will, in general, be controlled using the temperature of the copper conductors in a bar/coil instrumented for temperature monitoring.

A heat/cool cycle with no hold time is used. That is, when the maximum temperature at the copper conductors is achieved, the heat cycle is terminated and cooling commences immediately. At the minimum temperature, the heating cycle is initiated, and so on, until the conclusion of the test.

The recommended test temperatures are between a low limit of 40 ºC and a high limit as defined by the thermal/temperature classification limit of the winding with tolerances as defined in 5.3. An average rate of rise of 2.5 ºC (± 1.0 ºC on the average) per minute is recommended with a similar cooling rate. For example, a class F winding would have a thermal cycle in which the temperature is raised from 40 ºC to 155 ºC and then reduced to 40 ºC. It would take 92 min to complete a thermal cycle at the specified average rate of rise/fall of temperature. This is calculated as follows:

$$2x(155\ ^{\circ}C - 40\ ^{\circ}C)/t = 2.5\ ^{\circ}C \pm 1\ ^{\circ}C$$

where

Nominal time (t) is 92 min
Minimum time (t_{min}) is 66 min
Maximum time (t_{max}) is 153 min

NOTE—Multiplier 2 accounts for the heating and cooling phases of the thermal cycle.

Unless otherwise specified, the bars/coils shall be subjected to 500 thermal cycles.

Copyright The Institute of Electrical and Electronics Engineers, Inc.
Provided by IHS under license with IEEE
No reproduction or networking permitted without license from IHS
Not for Resale

5. Thermal cycling test setup

5.1 Quantity of bars/coils required for testing

In some winding designs, the bottom and top halves of the bars/coils have a somewhat different depth. This difference must be considered when selecting test specimens. Preference should be given to the larger section due to its higher absolute shear stress. In either case, all bars/coils including control bars/coils and guard bars/coils shall all be the same depth.

Bars or coils are required to perform functions as follows:

— The minimum number of test specimens (excluding the temperature control bars, if used) shall be four stator bars or two coils (four legs). The actual number and selection of test specimens should be mutually agreed upon by the customer and the testing facility, since power supply or space restrictions may limit the maximum number of samples that can be tested.

— Two specimens may be used to act as thermal guards. If used, the thermal guard bars/coils are positioned outside of the test specimens. Their function is to provide an outer heat source around the bars/coils under test. This simulates the heat radiation between the bars/coils and eliminates the external temperature differential across the outer test specimens. These bars/coils may be omitted if an alternative means is used that ensures that all test samples meet the required temperature criteria.

— Unless otherwise agreed upon, one additional specimen shall act as a temperature control bar. It shall be used to control thermal cycling by measuring the internal copper temperature. A suitable temperature measurement device (see 5.3) shall be embedded in this sample. It should be noted that this specimen cannot be tested further, since attaching a temperature sensor to the copper invalidates any other electrical test data on this bar/coil.

If the testing facility has had previous experience demonstrating that the correlation between the bar/coil surface temperature and the copper conductor temperatures along its narrow edges remains unchanged for the type of insulation system being tested, then an alternate method is used to establish this relationship in preliminary testing. This must be agreed upon by the customer and the testing facility. Once such a relationship is firmly established, the bar or coil used to derive copper conductor temperatures is replaced with a bar or coil intended for testing. This method is described in annex B.

The advantage of this method is that space on the test bench is occupied for the full number of thermal test cycles by samples that can all be tested further, since no holes have been drilled through the insulation to the copper in order to accommodate temperature sensors.

The disadvantage with this alternate method is that the bar/coil surface temperature that controls the thermal cycling depends upon the thermal resistance of the groundwall, which may change during the test. The relationship between the copper and surface temperature of the bar/coil could therefore be altered.

5.2 Positioning and setting up bars/coils for test

A typical layout on a plenum chamber is shown in figure 1. Typically, test specimens are positioned above a plenum chamber to ensure the following:

— The samples are adequately supported so as not to impose any unnecessary mechanical stresses during testing. The smaller dimension of the cross section of the bar/coil should face the plenum. It is recommended that samples be supported at least every meter of the slot length.

— Samples are placed parallel and equidistant (e.g., 10 cm center-to-center) to each other. This will ensure uniform surface temperature distribution of the test specimens.

— If other methods of cooling are used, care should be taken to ensure that both sides of the bar/coil are cooled simultaneously.

--`,,,`,,`-`-`,,`,,`,`,,`---

Copyright The Institute of Electrical and Electronics Engineers, Inc.
Provided by IHS under license with IEEE
No reproduction or networking permitted without license from IHS Not for Resale

The bars/coils are connected in series using copper links of sufficient flexibility to avoid mechanical problems. These links should be appropriately sized, carefully installed, and thermally insulated to ensure that they do not become heat sinks or heat sources. The bars or coils are completely unrestrained other than by the links between them.

Methods for connecting bars/coils should provide for an adequate contact area such that the required temperature criteria are met. Smoothing of the contact surface may be necessary.

Once in position, the samples are connected in series to either an ac or dc variable high-current source. The samples may also be connected so that they form short-circuited secondary windings of current transformers in which the test current will be induced, provided the desired current in each sample can be verified.

An example calculation for sizing the current source required is provided in annex A.

The plenum chamber/blower provides forced cooling for the stator bars/coils. The capacity of the blower and the sizing and spacing of the cooling passages in the plenum chamber should provide for the required surface temperature distribution during the cooling phase of the thermal cycle.

The typical positioning of the bars and coils is illustrated in figures 2 and 3.

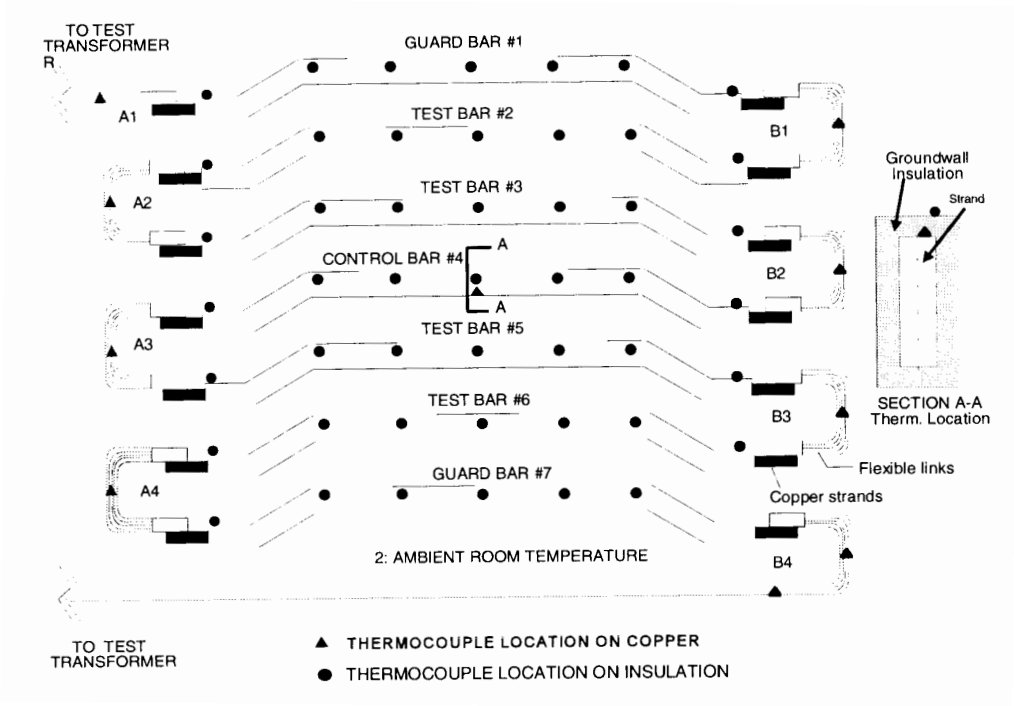

Figure 2—Schematic of a typical arrangement of bars showing locations where temperature has to be monitored on bars during thermal cycling tests (Thermocouples on the flexible links are not mandatory.)

Copyright The Institute of Electrical and Electronics Engineers, Inc.
Provided by IHS under license with IEEE
No reproduction or networking permitted without license from IHS
Not for Resale

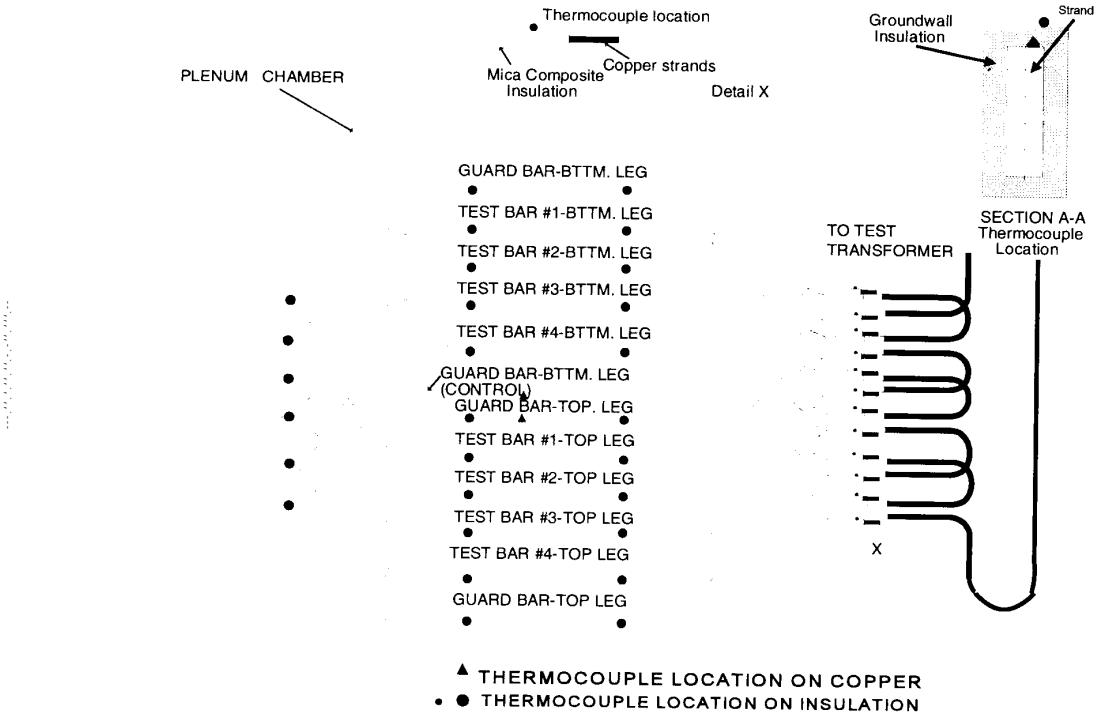

Figure 3—Schematic of a typical arrangement of coils showing locations where the temperature has to be monitored during thermal cycling tests

5.3 Temperature criteria, measurement, and control

The temperature controls shall be designed to meet the following limits:

— The measured copper maximum and minimum temperatures (control point) shall be controlled within ± 3 ºC of their specified temperatures during active cycling.

— The measured surface temperature of each measurement along the coil's straight sections shall be maintained within ± 5 ºC of the average measured straight section surface temperature.

— The measured insulation surface temperature taken in the immediate vicinity of the lead/link shall be maintained within ± 10 ºC of the average measured straight section surface temperature of the total setup.

The bar/coil surface and copper temperatures may be measured by the use of any suitable temperature transducer with an electrical output for control and monitoring purposes. These devices include

— Thermocouples
— Thermistors
— Fiber-optic temperature sensors
— Other appropriate devices

Copyright The Institute of Electrical and Electronics Engineers, Inc.
Provided by IHS under license with IEEE
No reproduction or networking permitted without license from IHS Not for Resale

The temperature sensors must have an accuracy of ± 2 ºC. Good thermal contact between the test piece and the temperature sensor must be maintained. If necessary, a heat sink compound should be used to improve heat flow to the temperature sensor. Some means should be employed to minimize the effects of extraneous air flow over the sensors. In order to ensure an acceptable temperature distribution along the test object, one temperature measuring device per meter is required, with a minimum of three such devices per test piece. Temperature sensors may also be installed on the links between the bars/coils to ensure that heat sinking/sourcing is not occurring at these points. Verification that the temperature distribution is uniform and that there are no hot spots should be performed with any suitable device, such as an infrared camera.

The temperature of the copper conductor of the bar/coil used to control thermal cycling during the test must be measured accurately. On the edge that will be upwards or on the side during the test, drill a hole approximately 10 mm in diameter down to the copper at the midpoint as well as at 25% and 75% of the slot length. If the holes are drilled on the sides, care should be taken to ensure against erroneous readings due to cooling air flow. Expose the copper with minimal removal of the metal. The holes are intended to accept low mass thermocouple junctions or other suitable sensors. An insulating film no greater than 0.05 mm in thickness may be used between the junction and the conductor of the bar or coil. If direct contact is to be made with the conductor, then contact shall be limited to one strand. Provision shall be made for compressing the thermocouple junction against the conductor. The hole is to be filled with materials having similar thermal properties as the original insulation.

Controls that will provide automatic control of the thermal cycling test setup should be used. Cycle triggering shall be based on the test sample copper temperature using any one of the three points on the temperature control bar/coil.

A permanent record of temperature information as a function of time should be obtained from all the temperature sensors. Suitable recording devices include the following:

— Multichannel strip chart recorder
— Dedicated data logger
— Computer-based data acquisition system

The method of recording shall meet the requirements outlined in clause 9.

6. Bar/coil preparation

Examine the bars or coils and record any evidence of external damage.

Ensure that all strands are brazed or clamped together at both ends of the bar or coil. The brazed area may need to be filed in order to provide a good electrical contact surface.

As an alternative, and only if agreed upon in advance, equal groups of strands of the bar/coil may be connected in series, provided that adequate isolation between the strands is maintained throughout the test. Connecting the strands in series enables the bar/coil to be heated with less current.

Measure the dc resistance between the two terminals of each bar or coil as per IEEE Std 118-1978.[4] The purpose of this test is to detect bars/coils with broken strands. If strand-to-strand connection is used, the bar/coil must be checked for strand-to-strand shorts.

[4]Information on references can be found in clause 2.

--`,,,`,,,-`-`,,`,,`,`,,`---

Copyright The Institute of Electrical and Electronics Engineers, Inc.
Provided by IHS under license with IEEE
No reproduction or networking permitted without license from IHS Not for Resale

7. Diagnostic tests during thermal cycling

Care must be used in the handling of the specimens for these tests since any damage will render the test results invalid. Whenever possible, all tests should be made with the bar/coil remaining in the thermal cycling test setup.

Unless otherwise agreed upon, the condition of the high-voltage insulation shall be determined by the nondestructive tests listed in the following subclauses. Electrical proof and the optional surface resistivity tests are conducted prior to and at the completion of the thermal cycling with no temperature sensors attached. The remaining tests shall be conducted on the test specimens with temperature sensors attached, prior to thermal cycling, after 50, 100, and 250 cycles, and at the completion of the thermal cycling. However, if the slot section of the specimen is to be ungrounded during the dissipation factor and tip-up measurement, then the temperature sensors may have to be disconnected from the instrumentation.

The primary objectives of the test procedures outlined below are as follows:

— To establish a reference point for the condition of the insulation after the manufacturing process
— To detect changes occurring in the insulation during thermal cycling
— To establish the end-condition of the insulation after the thermal cycling tests

Further, it is important that any diagnostic test have a negligible aging effect compared with the actual thermal cycling test.

Assessment of the condition of a groundwall insulation system after a predetermined number of thermal cycles is difficult. The thermal cycling itself will not break down the insulation because the voltage across the groundwall insulation is low. Consequently, it is important to determine the extent of insulation degradation by using the following nondestructive diagnostic techniques.

7.1 Electrical proof test

A proof or withstand test at 50 Hz or 60 Hz ac voltage shall be applied to every bar/coil prior to the commencement of the thermal cycling test. This test shall be a hipot test as specified in 8.1. For multiturn coils only, an additional turn-to-turn test will be required as per 8.1.

7.2 Dissipation factor and tip-up measurements

Guarded capacitance and dissipation factor measurements should be carried out on the slot section of each bar/coil as described in IEEE Std 286-1975.

7.3 Partial discharge measurements

This test is optional.

The partial discharge measurements should be performed at the rated machine line-to-ground voltage or at a previously agreed upon voltage that is higher than the rated machine line-to-ground voltage, at the rated frequency at room temperature, and in accordance with ASTM D1868-93. Since partial discharge readings may be time dependent, they should all be taken at a constant interval after application of the test voltage.

If the partial discharge measurements follow the dissipation factor and tip-up measurements, then it may be necessary to paint the bar/coil at the guard rings.

Copyright The Institute of Electrical and Electronics Engineers, Inc.
Provided by IHS under license with IEEE
No reproduction or networking permitted without license from IHS Not for Resale

7.4 Physical measurements

Bar/coil cross section dimensions should be measured prior to, during, and after the completion of the thermal cycling tests to determine if there have been any changes in the overall dimensions of the bar/coil. These measurements shall be carried out at a minimum of three different locations in the slot portion of the bar/coil, and to an accuracy of ± 0.025 mm. The measurements should be made with the bar/coil at room temperature. The measurement points shall be marked on the bars/coils.

7.5 Tap test

For informational purposes only, a tap test may be performed by experienced personnel to note the presence of any delaminated sections of insulation on the bar/coil. When a hollow or damped sound emanates, it suggests the existence of delaminated insulation. Frequency spectrum analysis of the acoustic energy resulting from tapping the bar may be employed to quantitatively characterize the acoustic response of an insulated bar/coil. Anomalous low-frequency response may suggest delamination of the insulation.

7.6 Surface resistivity

As a test option, surface resistivity measurements may be performed on the slot portions of stator bars/coils as per the procedure of ASTM D 257-93. The measurement shall be taken at the midpoint and at 25% and 75% of the slot length.

The measurements are made at room temperature by means of a hand-held probe. Each side of the bar/coil is checked and the minimum and maximum values of surface resistivity are noted.

The design of a typical probe is shown in figure 4.

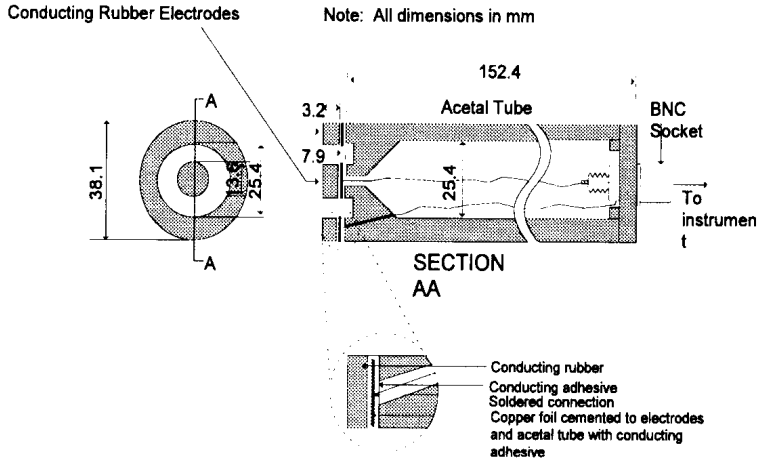

Figure 4—Design of a typical probe used for measurement of surface resistivity of bar/coil

Copyright The Institute of Electrical and Electronics Engineers, Inc.
Provided by IHS under license with IEEE
No reproduction or networking permitted without license from IHS
Not for Resale

This probe is used with a battery-operated ohmmeter. The probe electrodes are placed on the surface to be checked and the resistance between the electrodes is measured. The dimensions of the electrodes are chosen such that the surface resistivity is given by:

$$\rho = 10\ R$$

where

ρ is resistivity in ohms per square
R is resistance in ohms

NOTES

1—The resistance of the graded portions of bars/coils is nonlinear with voltage. Therefore, this technique should not be used to measure the surface resistivity of these areas (i.e., areas outside of the slot portion of the bar/coil).

2—The volume resistivity of the rubber contact electrodes should be very small compared to the surface resistivity of the slot paint to ensure accurate results.

8. Post-thermal cycle tests

The choice of post-thermal cycle tests depends on the purpose of the test program, the results of preliminary testing and diagnostic testing during thermal cycling, and the time and resources available for the test program. For example, a user with experience and confidence using a specific thermal cycling and one or more proof tests, may only need a minimum of diagnostic testing and would limit dissection to the investigation of nontypical failures. A manufacturer trying to choose the optimum materials and processes, on the other hand, would need more extensive information on the location and nature of failures and on the aging processes involved to optimize the coil design.

The diagnostic tests should be repeated at the end of thermal cycling, but must be complemented with one or more post-thermal cycle tests, including proof tests and either a breakdown or voltage endurance test, as agreed by the parties involved. Although breakdown and voltage endurance tests are destructive in nature, this is acceptable because there is no intention to use the test samples in a machine. Post-thermal cycle tests are one basis for the evaluation of thermal cycling effects. The evaluation can be based on either absolute criteria or a comparison with a reference bar/coil that was tested using the same procedures and bars/coils of same or similar design. Evaluation criteria must be clearly established prior to commencement of testing. Dissection of the coil is by its nature destructive. If the dissection is performed, it should therefore be performed last.

8.1 Proof tests

Unless otherwise agreed, the following proof tests shall be made after thermal cycling:

— High potential (hipot) test—ac at 50 Hz or 60 Hz and at a voltage of 1.17 x(2*E*+1) kV, where *E* is the rated phase-to-phase voltage of the machine in kilovolts. The voltage is raised as specified in 2.3.3.1 of IEEE Std 4-1978. The final test voltage is then maintained for 1 min.

— For multiturn coils only, a turn-to-turn test as described in IEEE Std 522-1992.

8.2 Breakdown or voltage endurance test

If the bars/coils pass the proof tests, a breakdown or voltage endurance test should be performed. Voltage endurance is the preferred post-thermal cycle test, since voids (whether from cracks or delamination) created by thermal cyclic degradation should result in a decrease in the test life. This testing shall be done per IEEE Std 1043-1989. By prior agreement, shorter sections of the bar/coil may be tested per the voltage endurance procedures of IEEE Std 434-1973.

--`,,,`,,`-`-`,,`,,`,`,,`---

Copyright The Institute of Electrical and Electronics Engineers, Inc.
Provided by IHS under license with IEEE
No reproduction or networking permitted without license from IHS Not for Resale

If a breakdown test is to be made, a 1 min, step-by-step ac breakdown test is recommended as outlined in ASTM D 149-93a.

During both of these tests, virgin bars/coils must also be tested in the same manner as those that have been thermal cycled, so that the extent of thermo-mechanical degradation can be determined. The number of virgin bars/coils to be so tested shall be decided between the parties prior to the testing.

Since the voltage endurance test described in IEEE Std 1043-1989 is the preferred test, the alternate breakdown test or the voltage endurance test on shorter sections per IEEE Std 434-1973 shall be performed only if agreed to by the parties involved.

8.3 Dissection

Unless otherwise agreed to, specimens that fail any proof tests should be dissected to obtain engineering information. If agreed to by the parties, dissections of other specimens may be performed as appropriate.

For bars/coils that punctured during a proof, breakdown or voltage endurance test, the location of the failure on the coil surface shall be recorded, along with its path through the groundwall insulation, its location at the conductor, and the local condition of strand and turn insulation. The thickness of the insulation wall shall be determined in accordance with 5.3.4, IEEE Std 1043-1989. Cross-sectional measurements shall be taken and the insulation dissected at areas remote from the failure to determine if degradation is localized or general. These locations shall also include the middle of the slot section and each of the slot ends.

The specimens must be dissected under the supervision of a qualified and experienced technical insulation expert. Observations made by the specialist should be documented in a report in accordance with clause 9 of this recommended practice. Further information can be obtained from [B1], which documents and quantifies some typical defects observed in bars/coils upon dissection.

In special cases it may be desirable to perform additional testing pertinent to a specific failure mechanism. Comparative tests (optional) can be made on aged versus unaged groundwall insulation to determine the degree of chemical, mechanical, and thermal degradation. The following tests may be used to assess the condition of the groundwall insulation:

— *Percent extractables*, according to ASTM D 494-91. This standard was written for phenolics, but has also been used to extract acetone soluble unreacted monomer and degradation products from aging insulation, containing epoxy or polyester resins.

— *Organic content*, according to ASTM D 352-92. This method is specifically designed to determine the organic content of bonded mica insulation. The muffle furnace procedure is probably preferable to the bunsen-burner heating as the temperature can be controlled more carefully within the furnace. Platinum crucibles are usually more weight-stable than porcelain crucibles. A 2 h heating program from room temperature to 675 °C, followed by slow cooling back to room temperature, appears to give satisfactory results, and does not dehydrate mica.

— *Organic content by burnout*, according to ASTM D 619-94, or by thermogravimetry according to ASTM E 1131-93.

— *Tensile strength*, according to ASTM D 229-91.

— *Flexural strength*, according to ASTM D 790-92 and D 229-91.

— *Shear strength*, according to ASTM D 2344-84(89) and ASTM D 3846-94. This test may provide useful information on the interlaminar bond strength of mica/resin groundwall insulation.

Copyright The Institute of Electrical and Electronics Engineers, Inc.
Provided by IHS under license with IEEE
No reproduction or networking permitted without license from IHS
Not for Resale

— *Dynamic mechanical properties,* according to ASTM D 5023-93 or ASTM D 5026-93. This information may be useful in determining the stiffness, effectiveness of cure, and mechanical damping properties of the insulation layers.

— *Glass transition temperature by thermomechanical analysis (TMA),* according to ASTM E 1545-93, or by *differential scanning calorimetry (DSC) or differential thermal analysis (DTA),* according to ASTM E 1356-91. *Glass transition temperature* can provide useful information about the thermal history, stability, and electrical and mechanical behavior of the insulation.

— *Linear thermal expansion,* according to ASTM E 831-93. This test can provide information on the thermal stress between the layers of the insulation.

— *Fourier transform infrared spectroscopy.* This can be a useful technique for identifying primary components, contaminants, and degradation products within the insulation layers.

9. Preparation of test report

After compilation of the test data, a report should be prepared showing the following:

a) Plot of a typical heating/cooling curve observed for the test bars
b) Photographs of the test setup
c) Plots showing insulation diagnostic test trends during thermal cycling
d) Results of voltage endurance tests or breakdown tests at the conclusion of thermal cycling
e) Results of dissection of the bars/coils, if performed

The amount of any additional test detail and data to be retained and/or provided shall be as mutually agreed.

10. Bibliography

[B1] Cherukupalli, S. E.; G. L. Halldorson; H. E. Orton; and B. Huggins, “Electric Field Enhancement Studies on Stator Windings with Defect Sites Using Finite-Element Computation,” *Proceedings: The Electrical/Electronics Insulation Conference and Electrical Manufacturing and Coil Winding Conference,* Chicago, IL, pp. 345–351, Oct. 1993.

[B2] Matsunoba, K.; S. Isobe; and K. Oka, “Study on the Insulation Deterioration of High Voltage Stator Windings by Heating and Cooling Cycles,” *IEEE Transactions,* vol. 92-A, no. 1, pp. 18–26, 1972.

[B3] Mitsui, M.; K. Yoshida; Y. Inoue; and S. Kenjo, “Thermal Cyclic Degradation of Coil Insulation for Rotating Machines,” *IEEE Transactions on Power Apparatus and Systems,* vol. PAS 102, pp. 67–73, 1983.

[B4] Montanari, G. C., and G. Pattini, “Thermal Endurance Evaluation of Insulating Materials: A Theoretical and Experimental Analysis,” *IEEE Transactions on Electrical Insulation,* vol. EI-21, no. 1, pp. 69–77, 1986.

[B5] Rehder, R. H.; B. J. Moore; and R. E. Draper, “Experience Gained Performing Thermal Cycling Tests,” *Proceedings: The Electrical/Electronics Insulation Conference and Electrical Manufacturing and Coil Winding Conference,* Chicago, IL, pp. 563–567, Oct. 1993.

[B6] Stone, G. C.; J. F. Lyles; J. F. Braun; and C. L. Kaul, “A Thermal Cycling Type Test for Generator Stator Winding Insulation,” *IEEE Transactions on Energy Conversion,* vol. 6, no. 4, pp. 707–713, 1991.

[B7] Train, D., and L. Melia, “ A Combined Voltage Endurance and Thermal Cycling Test for Stator Coils and Bars,” *Conference on Electrical Insulation and Dielectric Phenomena,* pp. 679–686, Oct. 1992.

--`,,,`,,,-`-`,,`,,`,`,,`---
Copyright The Institute of Electrical and Electronics Engineers, Inc.
Provided by IHS under license with IEEE
No reproduction or networking permitted without license from IHS Not for Resale

Annex A

(normative)

Sample calculation

A.1 Approximate method for calculation

The thermal cycle test requires a current of sufficient capacity to heat the stator bar or coil. An approximate method for the calculation of the current is described based on simple assumptions.

Neglecting the losses of thermal energy during the heating and assuming the heating is an adiabatic process, the temperature rise of copper bar/coil is given by

$$\Delta T = (I^2 \cdot R \cdot \Delta t)/(m \cdot \eta) \quad \text{(A.1)}$$

where

ΔT is temperature rise (K)
I is current (A)
R is resistance (Ω)
Δt is time interval (s)
m is mass (g)
η is specific heat (W· s/g·K)

The specific heat (η) of copper is used with its value at 20 °C, neglecting its dependence on temperature.

Using values from table A.1

$$I = n \cdot a \cdot b \cdot (\sqrt{\delta} \cdot \sqrt{\eta} / \sqrt{\rho}) \cdot (\sqrt{\Delta T} / \sqrt{\Delta t}) \quad A \quad \text{(A.2)}$$

or

$$I = n \cdot a \cdot b \cdot 1396 (\sqrt{\Delta T} / \sqrt{\Delta t}) \quad A \quad \text{(A.3)}$$

or

$$j = 1396 \cdot \sqrt{\Delta T} / \sqrt{\Delta t} \quad A/cm^2 \quad \text{(A.4)}$$

where

j is current density

For a value of 2.5 °C temperature rise in 1 min

j is 285 A/cm^2

Table A.2 provides current density values for heating intervals from 20–50 min, and for temperature intervals from 100–250 K. It should be recognized, however, that the high temperature range of the order of 250 K is not required in the thermal cyclic tests.

Copyright The Institute of Electrical and Electronics Engineers, Inc.
Provided by IHS under license with IEEE
No reproduction or networking permitted without license from IHS Not for Resale

Table A.1—Calculation of bar/coil parameters based on characteristic values of copper

Resistivity	ρ (1.78×10^{-6} Ω–cm)
Specific mass	δ (8.93 g/cm^3)
Specific heat	η (0.093 cal/g·k) (0.389 w·s/g·k)
Strand dimensions, height, width, length	a, b, l (cm)
Number of parallel strands	n
Mass	δ·n·a·b·l (g)
Resistance	ρ·l/ (n·a·b) (Ω)

Table A.2—Current density (A/cm2) for adiabatic current heating of form-wound coils and bars

	ΔT (K)					
Δ t (min)	250	200	170	140	120	100
20	637	570	525	447	441	403
30	520	465	429	389	360	329
40	450	403	371	337	312	285
50	403	360	332	302	279	255

A.2 Loss of thermal energy, practical tests

With increasing copper temperature, thermal energy will be dissipated by thermal conductivity and the cooling effects of the surrounding air. On the other hand, as the resistance of copper increases, as current is kept constant, the copper losses will also increase. These influences cannot be calculated exactly in advance. Practical tests have shown that a ΔT of 20–40 K higher than required has to be chosen in the calculation of the current density by equation (A.4). Temperature monitoring during the first cycle allows the current estimate to be refined for the remaining cycles.

A.3 Test equipment

Depending on the test object (*bar:* corresponding with large cross section, small copper length; *coil:* corresponding with small cross section, large copper length), a transformer will be needed to provide for the required current of several kiloamps. For example, simultaneous testing of 4–8 bars in series required 4500 A provided by a 150 kVA, 60 Hz transformer.

Testing full coils with “in” turns, the transformer current decreases to 1/*n* of the current through the whole cross section, but the needed transformer voltage output will increase *n*-times compared to a bar of the same geometric shape. Thus, the needed volt-ampere output remains constant. For universal applications, a heating transformer with windings to be switched in parallel or series, as needed, may be used.

Copyright The Institute of Electrical and Electronics Engineers, Inc.
Provided by IHS under license with IEEE
No reproduction or networking permitted without license from IHS Not for Resale

Annex B

(normative)

Alternate test procedure for thermal cycle testing without a temperature control bar

An alternate method that uses the groundwall insulation surface temperature of one of the test bars/coils for cycling, as opposed to the copper temperature of the temperature control bar/coil is described. Due to the possible formation of voids in the groundwall insulation caused by thermal cycling, this alternate method must ensure that the surface temperature used to control the cycling is not influenced by the voids. This is accomplished by clamping the insulation and monitoring at an extra point along the end arm of one of the bars/coils. This will prevent separation of the insulation from the copper in this area but will not inhibit potential delamination in the slot portion of the bar/coil.

The test procedure is as follows:

a) Establish a correlation between the copper and surface temperature on a sample (calibration) bar/coil. This calibration bar/coil is not used for further thermal cycling.

b) Replace the calibration bar/coil with the test bar/coil and install a control temperature sensor on the surface of the slot portion and an additional temperature sensor on the surface of the end arm.

c) Apply a clamping force of 25 N between the narrow edges of the bar/coil at the location of the end arm temperature sensor.

d) Establish correlation between the center and the end arm temperature sensors during the first one or two thermal cycles (before any voids are formed).

e) For the test to be valid, the correlation determined in step d) shall not change by more than ± 5 °C throughout the test.

Copyright The Institute of Electrical and Electronics Engineers, Inc.
Provided by IHS under license with IEEE
No reproduction or networking permitted without license from IHS Not for Resale

Annex C

(informative)

Decisions required by manufacturer/ purchaser/ testing facility

Due to the costs, time, and resources required for the thermal cycle testing of bars/coils, this recommended practice also permits alternate selection of samples, test preparation, testing methods, etc., in addition to the recommended practice described. This recommended practice also provides for some optional tests.

It is important that the parties involved, such as manufacturers, users/purchasers, and testing facilities, agree upon the testing parameters prior to the commencement of the tests. These parameters include:

a) What are the pass/fail criteria of the test program? (See 1.1)

b) Which of production, prototype, or similar design bars/coils are to be used in testing? (See 4.1.)

c) What is the variance between the similar design bar/coil, if used, and the actual production bar/coil? (See 3.1.)

d) How many bars/coils are to be tested, if more than the recommended minimum? (See 5.1.)

e) Are the bottom or top bars/coils, if of different cross section, to be selected for testing? (See 5.1.)

f) What is the minimum number of thermal cycles, if other than 500? (See 4.4.)

g) Is thermal cycling triggered by a dedicated temperature control bar/coil or indirectly by one of the test bars/coils? (See 5.1.)

h) Are thermal guard bars/coils to be used? (See 5.1.)

i) What is the method of cooling, if different from the recommended method? (See 5.2.)

j) What temperature measurement device will be used? (See 5.3.)

k) What is the temperature recording mechanism to be used? (See 5.3.)

l) Is the alternate method using the series connection of bar/coil strands permitted? (See clause 6.)

m) Which diagnostic tests will be performed during thermal cycling? (See clause 7.)

n) Will the optional partial discharge test be performed? (See 7.3.) If so, what is the procedure to be adopted, and the parameters to be recorded? Will the measurements be taken at a voltage higher than the rated machine line-to-ground voltage? If so, at what voltage?

o) Is the optional bar/coil surface resistivity measurement required? (See 7.6.)

p) What post-thermal cycle tests will be performed? (See clause 8.)

q) Is the breakdown voltage test acceptable in lieu of the voltage endurance test? (See 8.2.)

r) Is voltage endurance testing of shorter sections per IEEE Std 434-1973 acceptable? (See 8.2.)

s) How many virgin bars/coils are to be tested for comparison to thermally cycled bars? (See 8.2.)

t) What optional comparative tests should be performed? (See 8.3.)

u) What other locations, besides the points of failure of the bars/coils, should be dissected? (See 8.3.)

v) Are there any additional requirements for test reports? (See clause 9.)

Copyright The Institute of Electrical and Electronics Engineers, Inc.
Provided by IHS under license with IEEE
No reproduction or networking permitted without license from IHS Not for Resale