IEEE Guide for Motor Operated Valve (MOV) Motor Application, Protection, Control, and Testing in Nuclear Power Generating Stations

Sponsor

Nuclear Power Engineering Committee
of the
IEEE Power Engineering Society

Approved 21 March 1996

IEEE Standards Board

Abstract: Motors used to drive valve operators in nuclear power generating stations are discussed. Guidelines to evaluate the adequacy of motors used to drive valve operators; to provide recommendations for motor application; and to provide methods for protection, control, and testing of motors used for valve operation are presented.
Keywords: generating stations, motor application, motor control, motor protection, motors, motor testing, nuclear power, nuclear power generating stations, valve operation, valve operators, valves

The Institute of Electrical and Electronics Engineers, Inc.
345 East 47th Street, New York, NY 10017-2394, USA

Copyright © 1996 by the Institute of Electrical and Electronics Engineers, Inc.
All rights reserved. Published 1996. Printed in the United States of America.

ISBN 1-55937-752-6

No part of this publication may be reproduced in any form, in an electronic retrieval system or otherwise, without the prior written permission of the publisher.

Copyright The Institute of Electrical and Electronics Engineers, Inc.
Provided by IHS under license with IEEE
No reproduction or networking permitted without license from IHS
Not for Resale

IEEE Standards documents are developed within the IEEE Societies and the Standards Coordinating Committees of the IEEE Standards Board. Members of the committees serve voluntarily and without compensation. They are not necessarily members of the Institute. The standards developed within IEEE represent a consensus of the broad expertise on the subject within the Institute as well as those activities outside of IEEE that have expressed an interest in participating in the development of the standard.

Use of an IEEE Standard is wholly voluntary. The existence of an IEEE Standard does not imply that there are no other ways to produce, test, measure, purchase, market, or provide other goods and services related to the scope of the IEEE Standard. Furthermore, the viewpoint expressed at the time a standard is approved and issued is subject to change brought about through developments in the state of the art and comments received from users of the standard. Every IEEE Standard is subjected to review at least every five years for revision or reaffirmation. When a document is more than five years old and has not been reaffirmed, it is reasonable to conclude that its contents, although still of some value, do not wholly reflect the present state of the art. Users are cautioned to check to determine that they have the latest edition of any IEEE Standard.

Comments for revision of IEEE Standards are welcome from any interested party, regardless of membership affiliation with IEEE. Suggestions for changes in documents should be in the form of a proposed change of text, together with appropriate supporting comments.

Interpretations: Occasionally questions may arise regarding the meaning of portions of standards as they relate to specific applications. When the need for interpretations is brought to the attention of IEEE, the Institute will initiate action to prepare appropriate responses. Since IEEE Standards represent a consensus of all concerned interests, it is important to ensure that any interpretation has also received the concurrence of a balance of interests. For this reason, IEEE and the members of its societies and Standards Coordinating Committees are not able to provide an instant response to interpretation requests except in those cases where the matter has previously received formal consideration.

Comments on standards and requests for interpretations should be addressed to:

Secretary, IEEE Standards Board
445 Hoes Lane
P.O. Box 1331
Piscataway, NJ 08855-1331
USA

Note: Attention is called to the possibility that implementation of this standard may require use of subject matter covered by patent rights. By publication of this standard, no position is taken with respect to the existence or validity of any patent rights in connection therewith. The IEEE shall not be responsible for identifying all patents for which a license may be required by an IEEE standard or for conducting inquiries into the legal validity or scope of those patents that are brought to its attention.

Authorization to photocopy portions of any individual standard for internal or personal use is granted by the Institute of Electrical and Electronics Engineers, Inc., provided that the appropriate fee is paid to Copyright Clearance Center. To arrange for payment of licensing fee, please contact Copyright Clearance Center, Customer Service, 222 Rosewood Drive, Danvers, MA 01923 USA; (508) 750-8400. Permission to photocopy portions of any individual standard for educational classroom use can also be obtained through the Copyright Clearance Center.

Copyright The Institute of Electrical and Electronics Engineers, Inc.
Provided by IHS under license with IEEE
No reproduction or networking permitted without license from IHS
Not for Resale

Introduction

(This introduction is not a part of IEEE Std 1290-1996, IEEE Guide for Motor Operated Valve (MOV) Motor Application, Protection, Control, and Testing in Nuclear Power Generating Stations.)

Motor operated valves (MOVs) have historically presented both electrical and mechanical problems to the engineering community. Since a complete evaluation of MOV applications requires both electrical and mechanical disciplines, no one existing document covers MOVs in a comprehensive manner. As a result, MOV applications are evaluated using a wide array of existing standards and other documents. Thus, it is difficult to assemble all the supporting material to address all issues relating to MOVs and valve actuator motors (VAMs).

This guide provides references to other published documents as applicable. This guide presents issues and suggestions for consideration in the application, protection, control, and testing of VAMs. It specifically attempts to cover topics not found in existing IEEE or other easily accessible documents. This guidance is an accumulation of recommendations and suggested solutions to problems based on experience.

The reader is cautioned to use this guide in conjunction with applicable IEEE documents and new solutions to VAM problems that are evolving continually. Due to the dynamic nature of issues concerning MOVs, this document cannot be all-inclusive, and the user should search for information and solutions beyond this document.

Limit and torque switch settings have also presented problems to the engineering community. Their settings are dependent upon many complex factors. Guidance for setting these devices is outside the scope of this document, but this will be considered for a future revision.

This guide is presented in a logical progression of topics, their interrelationships, and their complexities.

This guide was prepared by Working Group 4.4 of Subcommittee 4, Nuclear Power Engineering Committee. The working group had the following members at the time this guide was approved:

Donald J. Ranft, *Chair*

Robert M. Bailey, Jr.
Richard J. Budzynski
John P. Carter
John Chiloyan
Brian D. Curry
John D. Kueck
Russell Matthis, Jr.
William P. Nowicki
Roger D. F. Parker
Barry J. Skoras
William L. Snider

Copyright The Institute of Electrical and Electronics Engineers, Inc.
Provided by IHS under license with IEEE
No reproduction or networking permitted without license from IHS
Not for Resale

The balloting group had the following members:

Satish K. Aggarwal
Russell E. Allen
Vincent P. Bacanskas
John T. Bauer
Farouk D. Baxter
Wes W. Bowers
Dan F. Brosnan
Nissen M. Burstein
Aris S. Candris
S. P. Carfagno
Robert C. Carruth
Robert L. Copyak
Gary L. Doman
Edward F. Dowling
Arthur R. DuCharme
Rich E. Dulski
Jay Forster
John M. Gallagher
Wil C. Gangloff
Louis W. Gaussa
Luis C. Gonzalez
Lawrence P. Gradin
Britton P. Grim
Robert E. Hall
Gregory K. Henry
Sonny Kasturi
James T. Keiper
J. Donald Lamont
Alex Marion
Richard E. Miller
R. B. Miller
Burt Nemroff
Mohandas Pai
Newell S. Porter
Ed W. Rhoads
Arnold Roby
Neil P. Smith
Peter B. Stevens
Peter Szabados
James E. Thomas
John T. Ullo
Mark S. Zar

When the IEEE Standards Board approved this standard on 19 September 1996, it had the following membership:

Donald C. Loughry, *Chair* **Richard J. Holleman,** *Vice Chair*
Andrew G. Salem, *Secretary*

Gilles A. Baril
Clyde R. Camp
Joseph A. Cannatelli
Stephen L. Diamond
Harold E. Epstein
Donald C. Fleckenstein
Jay Forster*
Donald N. Heirman
Ben C. Johnson
E. G. "Al" Kiener
Joseph L. Koepfinger*
Stephen R. Lambert
Lawrence V. McCall
L. Bruce McClung
Marco W. Migliaro
Mary Lou Padgett
John W. Pope
Jose R. Ramos
Arthur K. Reilly
Ronald H. Reimer
Gary S. Robinson
Ingo Rüsch
John S. Ryan
Chee Kiow Tan
Leonard L. Tripp
Howard L. Wolfman

*Member Emeritus

Also included are the following nonvoting IEEE Standards Board liaisons:

Satish K. Aggarwal
Alan H. Cookson
Chester C. Taylor

Mary Lynne Nielsen
IEEE Standards Project Editor

Copyright The Institute of Electrical and Electronics Engineers, Inc.
Provided by IHS under license with IEEE
No reproduction or networking permitted without license from IHS
Not for Resale

Contents

CLAUSE PAGE

1. Overview ... 1

1.1 Scope ... 1
1.2 Purpose ... 1

2. References ... 1

3. Definitions ... 2

4. Motor applications ... 3

4.1 Thermal considerations ... 3
4.2 Voltage considerations ... 4
4.3 Motor torque ... 5

5. Protection ... 7

5.1 Thermal overload relays ... 8
5.2 Fuses ... 8
5.3 Thermal contacts ... 13
5.4 Resistance temperature detector (RTD)—resistors ... 15
5.5 Molded case circuit breakers ... 15
5.6 DC VAM surge protection ... 16

6. Control ... 17

6.1 Thermal overloads (TOLs) ... 17
6.2 Limit/Torque switches ... 20
6.3 Valve control ... 27
6.4 Valve position indication ... 31
6.5 Alarms ... 31
6.6 Motor contactor ... 31
6.7 Interlocks ... 32
6.8 Hardware and material ... 32
6.9 Valve antihammering ... 32
6.10 Other considerations ... 33
6.11 Example ... 33

7. Motor condition tests and inspection overview ... 33

7.1 Common tests ... 34
7.2 Developing condition tests and inspections ... 36

8. Bibliography ... 38

Copyright The Institute of Electrical and Electronics Engineers, Inc.
Provided by IHS under license with IEEE
No reproduction or networking permitted without license from IHS
Not for Resale

ANNEX

Annex A Examples of motor torque calculations 39

Annex B Fuse selection examples 61

Annex C Control system selection example 66

--`,,`-`-`,,`,,`,`,,`---

Copyright The Institute of Electrical and Electronics Engineers, Inc.
Provided by IHS under license with IEEE
No reproduction or networking permitted without license from IHS
Not for Resale

IEEE Guide for Motor Operated Valve (MOV) Motor Application, Protection, Control, and Testing in Nuclear Power Generating Stations

1. Overview

1.1 Scope

This guide applies to motors used to drive valve operators in nuclear power generating stations.

1.2 Purpose

This guide presents guidelines to evaluate the adequacy of motors used to drive valve operators; to provide recommendations for motor application; and to provide methods for protection, control, and testing of motors used for valve operation.

2. References

This guide shall be used in conjunction with the following standards. When the following standards are superseded by an approved revision, the revision shall apply.

ICEA P32-382 (Reaff 1992), Short-Circuit Characteristics of Insulated Cables.[1]

IEEE Std 43-1974 (Reaff 1991) , IEEE Recommended Practice for Testing Insulation Resistance of Rotating Machinery (ANSI).[2]

IEEE Std 100-1992, The New IEEE Standard Dictionary of Electrical and Electronics Terms (ANSI).

IEEE Std 112-1991, IEEE Standard Test Procedure for Polyphase Induction Motors and Generators (ANSI).

[1]ICEA publications are available from ICEA, P.O. Box 411, South Yarmouth, MA 02664, USA.

[2]IEEE publications are available from the Institute of Electrical and Electronics Engineers, 445 Hoes Lane, P.O. Box 1331, Piscataway, NJ 08855-1331, USA.

Copyright The Institute of Electrical and Electronics Engineers, Inc.
Provided by IHS under license with IEEE
No reproduction or networking permitted without license from IHS
Not for Resale

IEEE Std 113-1985, IEEE Guide on Test Procedures for DC Machines (ANSI).

IEEE Std 118-1978 (Reaff 1992), IEEE Standard Test Code for Resistance Measurement.

IEEE Std 119-1974, IEEE Recommended Practice for General Principles of Temperature Measurement as Applied to Electrical Apparatus.[3]

IEEE Std 242-1986 (Reaff 1991), IEEE Recommended Practice for Protection and Coordination of Industrial and Commercial Power Systems (IEEE Buff Book) (ANSI).

IEEE Std 382-1985, IEEE Standard for Qualification for Actuators for Power Operated Valve Assemblies with Safety-Related Functions for Nuclear Power Plants (ANSI).

IEEE Std 432-1992, IEEE Guide for Insulation Maintenance for Rotating Electrical Machinery (5 hp to less than 10 000 hp) (ANSI).

IEEE Std 603-1991, IEEE Standard Criteria for Safety Systems for Nuclear Power Generating Stations (ANSI).

IEEE Std 741-1990, IEEE Standard Criteria for the Protection of Class IE Power Systems and Equipment in Nuclear Power Generating Stations.

IEEE Std C37.2-1991, IEEE Standard Electrical Power System Device Function Numbers (ANSI).

NEMA ICS 2-1993, Starters, Contactors and Overload Relays, Rated not More Than 2000 Volts AC or 750 Volts DC (sections 321–327).[4]

NEMA MG 1-1993, Motors and Generators.

NEMA ST 1-1988, Specialty Transformers (Except General-Purpose Type).

3. Definitions

3.1 duty cycle of a VAM: The number of consecutive valve strokes required for the intended service of the valve. Plant operation or testing may require successive stroking of the VAM.

3.2 duty cycle time of a VAM: The time for one stroke multiplied by the duty cycle.

3.3 inrush current: The rapid change of current with respect to time upon motor energization. Inrush current is dependent upon the voltage impressed across the motor terminals and the motor inductance by the relationship $V = L\ \mathrm{d}i/\mathrm{d}t$.

3.4 locked rotor torque: The torque output capability of the VAM at zero speed and rated voltage and frequency.

3.5 nonlocking gear train: A power transmission gear train design that allows the power train to back-drive whenever the primary driving force is removed.

[3]IEEE Std 119-1974 has been withdrawn; however, copies can be obtained from Global Engineering, 15 Inverness Way East, Englewood, CO 80112-5704, USA, tel. (303) 792-2181.

[4]NEMA publications are available from the National Electrical Manufacturers Association, 1300 N. 17th St., Ste. 1847, Rosslyn, VA 22209, USA.

Copyright The Institute of Electrical and Electronics Engineers, Inc.
Provided by IHS under license with IEEE
No reproduction or networking permitted without license from IHS Not for Resale

3.6 overload: Operation of equipment in excess of normal, full load rating, or of a conductor in excess of rated ampacity, which, when it persists for a sufficient length of time, would cause damage or dangerous overheating. A fault such as a short circuit or ground fault is not an overload.

3.7 position seating: A control scheme that uses the limit switch as the primary control for operation of a VAM. The limit switch controls the VAM by interrupting power to the motor contactor when the valve actuator has completed a predetermined number of revolutions.

3.8 rated locked rotor current: The steady-state current taken from the line with the rotor locked and with rated voltage and rated frequency applied to the motor.

3.9 rated start torque: A conservative value established by the manufacturer for motor torque at the locked rotor (zero speed) condition, taking into account uncertainties in the manufacturing process. It can exceed 20% less than locked rotor torque.

3.10 self-locking gear train: A power transmission gear train designed such that the power train will hold its position and not back-drive whenever the primary driving force is removed. A valve actuator with a self-locking gear train will hold the valve in its last position when the VAM is de-energized.

3.11 start current: The current taken from the line when the motor is producing rated start torque at rated voltage and frequency.

3.12 time rating of a VAM: The maximum amount of time the motor can be operated at rated running load without exceeding the allowable temperature rise for the insulation class being used.

3.13 torque seating: A control scheme that uses the torque switch as the primary control for operation of the VAM. The torque switch controls the VAM by interrupting power to the motor contactor when the valve actuator output torque exceeds a predetermined value.

3.14 total motor temperature: The motor temperature rise plus the ambient temperature.

3.15 valve stroke: Complete travel of a valve from either fully open to fully closed position or vice-versa.

3.16 VAM: valve actuator motor.

4. Motor applications

Valve actuator motors have a unique design that can result in significantly different operating characteristics than NEMA Design B motors. Continuous duty motors, such as NEMA Design B Motors, are rated in horsepower, which implies a constant torque. VAMs are neither continuous duty nor constant torque at rated speed. They can be characterized as short duty time, high starting torque motors.

4.1 Thermal considerations

The motor thermal endurance margin is a function of the load on the motor, the duration of the load, the applied voltage, and the ambient temperature. An increase in the load, an increase in the duration of the load, or an increase in the ambient temperature will result in a decrease in the thermal endurance margin of the motor.

For example, rated run torque is typically 20% of the start torque rating of the motor. There are disparities between vendors in the use of the run torque term that make it impossible to establish a universal definition. A motor rated for 10 ft·lbf (14 N·m) start torque and a 15 min time rating can typically be run continuously

Copyright The Institute of Electrical and Electronics Engineers, Inc.
Provided by IHS under license with IEEE
No reproduction or networking permitted without license from IHS Not for Resale

at a load of 2 ft·lbf (2.7 N·m) or less for up to 15 min in the rated ambient temperature at rated voltage and frequency without exceeding the design temperature limits of the motor. If the motor is run at more than 20% of the start torque rating, the temperature will rise more quickly. Since the temperature will approach the motor design limits faster at this higher torque loading, the result is a shorter allowable operating time. A longer time rating can be obtained by using a higher class insulation, a lower ambient temperature, or a larger start torque rated motor, which reduces the percentage of the running load.

A longer operating time requires similar considerations. The requirement for several full-stroke consecutive operations should be conservatively treated as a continuous operating time, since this scheme does not allow time for the motor to cool down between operations.

Jogging duty is more severe and shall be considered, when applicable. Required run torques, starting frequency, operating times, and temperature limitations of the motor insulation shall all be considered for the proper application of the duty cycle of a VAM.

4.2 Voltage considerations

Voltage at the VAM terminals shall be determined for all design basis conditions at the time of VAM required operation. The minimum and maximum source voltage is derived from a plant-specific voltage study, including any effects of the VAM starting. The effect of high and low voltage on motor torque is discussed in 4.3.

4.2.1 AC motors

4.2.1.1 Source voltage

Some of the conditions that should be considered are as follows:

a) Starting of large loads with resultant voltage dips

b) Separation from the offsite power supply, starting of the diesel generators, and sequencing of large load blocks that contain MOVs

c) Degraded grid voltage

4.2.1.2 Voltage drops

When calculating the terminal voltage at the VAM, all impedances in the circuit shall be included in the calculation. The impedance of thermal overload heaters shall be considered and may be 30 Ω or more for small heaters. It is also necessary to consider the effect of high ambient temperature on circuit components during certain plant operating and transient conditions. The impedance of the circuit breaker, contactor, and containment penetration assemblies are typically negligible.

4.2.1.3 Effect of locked rotor power factor

The high starting torque design of VAMs requires a high rotor resistance, which results in an elevated locked rotor power factor. Unlike induction motors, which may have typical locked rotor power factors of 0.2 to 0.4, VAMs may have starting power factors as high as 0.60 to 0.95. Data should be obtained from specific motor manufacturers. These high locked rotor power factors can have a significant effect on motor terminal voltage at starting conditions. See [B1].[5]

[5] The numbers in brackets preceded by the letter B correspond to those of the bibliography in clause 8.

Copyright The Institute of Electrical and Electronics Engineers, Inc.
Provided by IHS under license with IEEE
No reproduction or networking permitted without license from IHS Not for Resale

4.2.1.4 Source frequency

Significant frequency deviations (sustained high or low frequency) can cause motor overheating. Historically, frequency has not been a concern for VAMs because the power sources are highly frequency stable. If a VAM is powered from a source that could produce significant frequency variations (greater than a few percent) over a period of several seconds, the effect of those variations shall be considered in the design. Sources that could produce significant frequency deviations include motor-generator sets, diesel generators, and static inverters.

4.2.2 DC motors

4.2.2.1 Source voltage

The voltage drop analysis should consider dc system characteristics, such as battery end of life (fully aged), ambient temperature, battery equalizing charge voltage, voltage dip during starting of large loads, and where the MOV operates in the battery duty cycle. It should be noted that operation at reduced voltage may cause a change in actuator speed. Appendix B to IEEE Std 741-1990[6] provides an example showing a method for estimating the change in stroke time due to reduced voltage.

4.2.2.2 Voltage drops

All resistances shall be included when calculating the terminal voltage at the VAM. For shunt wound or permanent magnet field motors, circuit resistance is proportional to twice the resistance corresponding to the single conductor length for the starter-to-motor cable conductor. Compound wound motors supplied by a reversing starter have both the armature and series field connections cabled to the starter, and total circuit resistance is proportional to four times the resistance of length of the cable from the starter to the motor. Note that the shunt winding cable conductors may be a different size than the armature or series field conductors. The effects of a starting resistor shall be considered.

It is also necessary to consider the elevated resistance of cable that is in a high ambient temperature. For motors that may be required to start in a high ambient temperature, it is necessary to consider the effect of the ambient temperature on the cable and motor resistance when evaluating the torque output of the motor.

The resistance of the thermal overload heater shall be included. It can be 30 Ω or more for small heater sizes. If two thermal overload heaters are used, the resistance of both shall be used to obtain the total circuit resistance. The resistance of the circuit breaker, contactor, carbon brushes, and containment penetration assembly are typically negligible in relation to the thermal overload.

4.3 Motor torque

Motor temperature and terminal voltage affect torque output [B1]. Some motors may be required to start after being exposed to elevated ambient temperatures for several hours. It is prudent to evaluate the minimum available motor torque at the highest motor temperature and minimum voltage.

This internal temperature should be based on worst-case operating conditions. For valves that may be required to stroke more than once in succession, a temperature rise obtained from the motor performance curve should be added to the motor ambient temperature to account for the internal heat generated during the preceding strokes. For operations in changing ambient conditions, the thermal lag of the motor should be considered. High temperature fluid in pipes may provide a localized ambient temperature rise.

[6]Information about references can be found in clause 2.

Copyright The Institute of Electrical and Electronics Engineers, Inc.
Provided by IHS under license with IEEE
No reproduction or networking permitted without license from IHS Not for Resale

The distinction between rated start torque and locked rotor torque is an important factor in valve actuator motor application. Locked rotor torque is, by definition, the torque the motor produces at zero speed at rated voltage and frequency. Because variations in the manufacturing process allow some tolerance in the VAM resistance and inductance, and because all motors are not typically tested during the manufacturing process unless this was specified by the purchaser, a specific locked rotor torque for a specific VAM may be unavailable. The manufacturer therefore determines a rated start torque that it will guarantee. This rated start torque is usually a rather conservative value. For example, a motor that has a locked rotor torque design value of 342 ft·lbf (464 N·m) has a rated start torque of 300 ft·lbf (407 N·m).

If the user has no other data available on a specific motor, he or she has to use the rated start torque value in the calculation to determine the torque margin. If the user is able to perform testing, he or she will usually find more torque capability than would be given by the rated start torque value. This testing can be in the form of dynamometer testing at the plant of the manufacturer or user, or other testing where the motor current and voltage can be measured and the motor torque at zero speed determined by a thrust or torque measuring device. There are a number of diagnostic systems presently available to measure actuator thrust and torque. It is beyond the scope of this guide to discuss methods for determining motor torque from these diagnostic systems. In general, the locked rotor torque capability of the motor itself shall be determined, not the effect of rotational inertia of the actuator components. Where the output torque of the motor is assumed to be greater than the rated starting torque of the motor, each of the parameters (such as power factor, locked rotor current, and locked rotor torque) in the equation to estimate the output of the VAM shall be determined by testing the specific VAM being evaluated.

For applications where the hammerblow feature of the motor operator has been supplied, the VAM would start unloaded, thus requiring less voltage to start and drawing locked rotor current for a few milliseconds before actuating the hammer blow feature. Therefore, the VAM is only required to supply the torque associated with seating or unseating the valve while the motor is operating above zero speed. The current associated with this torque can be as much as 50% less than the locked rotor current. The voltage requirement for the unloaded motor would be expected to be reduced; however, this should be confirmed with the valve actuator supplier. The user may use this torque and current value in his or her analysis. The cases where the hammerblow feature could be negated are valves that have nonlocking gear sets with the valve position maintained by motor brakes, or valves that have last been seated by manual action. However, plant procedures generally require stroking the valve electrically after any manual manipulations.

The first torque margin calculation example in annex A for each motor type (ac and dc) is for the case where no other data is available and the calculation is done using rated start torque. The second example is done using torque and current values obtained from actual motor tests.

Under the abnormal conditions of actuator stall, motor locked rotor torque at elevated voltage may exceed the actuator limits. Since the actuator has to operate at reduced voltage where motor torque output is less, reducing motor size may not be a viable option. Actuators are normally capable of surviving at least a one-time stall condition in excess of rated torque or thrust. If the actuator is the limiting component, this one-time allowance might be considered for the case of a stalled motor. A weak link analysis of the MOV assembly would then be performed. This would identify components likely to be damaged by excessive torque/thrust. The components may be in the actuator or valve. These components could be examined by appropriate nondestructive examination techniques following the overtorquing incident. Spares should also be ordered for the weak link components. Thus, if an overtorque incident occurred, spares would be available for any required parts replacement. These techniques impact mitigating techniques only.

4.3.1 AC motor torque evaluation

Both voltage and temperature impact the starting torque. They may be considered independently. Examples of ac motor torque evaluation are found in annex A. The motor output torque is typically proportional to the per unit terminal voltage raised to the power of 2.0 or 2.2 [B1].

Copyright The Institute of Electrical and Electronics Engineers, Inc.
Provided by IHS under license with IEEE
No reproduction or networking permitted without license from IHS Not for Resale

Determining the effect of temperature on starting torque requires knowledge of the appropriate motor constants. As valve actuator motors are not NEMA Design A, B, C, or D motors, these motor constants cannot readily be derived from typical motor tests using IEEE Std 112-1991. In addition, the alloys used in the rotor bars and end rings vary with motor frame size and manufacturer, and the effect of temperature on secondary resistance cannot be determined unless the alloy is known. The locked rotor torque versus the winding temperature data for each ac motor type shall be obtained from the manufacturer. When using this data, it is important to use total motor temperature. The effects of elevated temperature and reduced voltage may be calculated in accordance with the guidance from the manufacturer as shown in the examples found in annex A.

After the motor torque at the anticipated worst-case voltage and temperature is determined, it should be compared with the motor torque requirement of the valve actuator, and there should be a reasonable margin between them. The motor torque requirements of the valve actuator will normally take into consideration valve size and type, valve stem thread characteristics, valve seat area, differential pressure, unit gear ratios, and other applicable factors. Motor terminal voltages below 70% of rated may result in a nonlinear torque relationship, and testing or data from the vendor should be used.

4.3.2 DC motor torque evaluation

For dc valve actuator motors, the relationship between the torque and current is approximately linear and is shown by the motor speed torque curve, which is provided as part of the motor data sheet. For the starting condition, the motor is modeled as a fixed resistance whose value, R_m, is:

$$R_m = \text{Rated Voltage} \div \text{Locked Rotor Current} \quad (1)$$

In the case where no other data is available, locked rotor current may be determined from the motor torque curve at the rated start torque value. However, if actual test data is available, it would be preferable to use the test data.

This value of motor resistance shall be corrected based on the postulated motor internal temperature just prior to motor starting. Once the maximum and minimum starting currents have been calculated, maximum and minimum torques can be determined by utilizing the motor speed torque curve. Motor terminal voltages below 70% of rated may result in a nonlinear torque relationship, and the actuator vendor should be consulted (note that some testing has been performed to 25% of rated voltage, which found that a linear relationship of torque to voltage exists) [B7]. Examples of dc motor torque evaluation are found in annex A.

5. Protection

In general, protection schemes shall consider the design function of the VAM and its ability to perform this function. The protection scheme shall also consider the protection of the VAM. However, protection cannot always be designed to enable the valve to perform this design function and to protect the valve actuator. When this occurs, VAM protection should be established to encompass one of the following options:

a) Protect the VAM at the expense of its design function to ensure that later VAM operation is possible. However, protection should not be provided that infringes on the design basis safety function of the VAM.

b) Provide as much VAM protection as possible without limiting its chances of accomplishing its design function. Providing limited VAM protection may allow undetected VAM degradation.

Protection can be provided by various types and combinations of devices. This guide discusses thermal overload relays (5.1); fuses (5.2); thermal contacts (5.3); resistance temperature detector (RTD)—resistors (5.4);

Copyright The Institute of Electrical and Electronics Engineers, Inc.
Provided by IHS under license with IEEE
No reproduction or networking permitted without license from IHS
Not for Resale

molded case circuit breakers (5.5); and dc VAM surge protection (5.6). This guide is concerned with only VAM coordination with upstream power sources.

As VAMs frequently have not been fuse protected, this guide provides some detail on fuse application (see annex B).

5.1 Thermal overload relays

Thermal overload relays protect VAMs from harmful overload conditions that may result in motor operation beyond the thermal limit of the operator.

A properly sized thermal overload relay will both ensure motor protection and allow motor operation for the entire design duty cycle. Setting a thermal overload relay to operate at a time/current point greater than the equivalent resultant thermal capability of the motor does not improve the starting reliability of the motor. If a motor is unable to provide adequate torque to move a valve at the beginning of the stroke, simply allowing the motor to continue to draw locked rotor current will not result in valve motion. Torque output will decrease as the motor heats up. Oversizing thermal overload relays does not result in expanded valve reliability, but rather in motor degradation whenever the motor is called upon to provide torque in excess of its capability [B2].

VAMs shall be protected against operating conditions in which the design limits of the motor are exceeded in order to ensure that MOV function is maintained.

Motor protection is normally provided through the use of thermal overload relays. Block 1 of figure 1 represents the overload section of the control scheme. The function of the thermal overload relay is to protect the motor from overloading. This protection is normally provided throughout the entire opening and closing operation of the valve. U.S. Regulatory Guide 1.106 [B13] and NUREG-1296 [B8] discuss overload protection for MOVs. This protection is significant when the torque switch is bypassed in the control circuitry.

a) Advantages
    1) Capable of resetting after trip and re-using
    2) Testable
    3) Many ambient compensated sizes available for ease of coordination with other protective devices, especially for smaller loads

b) Disadvantages
    1) Contains mechanical moving parts
    2) When thermal-magnetic breakers are used, difficult to coordinate for high impedance faults
    3) Additional circuit impedance
    4) Not designed nor rated for fault currents

Appendix B of IEEE Std 741-1990 provides typical sizing methodology for thermal overload relays. Electronic overload protection may be considered for new designs. However, such equipment is considered emerging technology and is beyond the scope of this guide.

5.2 Fuses

Fuse selection for the protection of VAMs should consider five factors:

— Protection for an overload condition. Operation should be allowed over the duration of the duty cycle time but within the thermal limit of the VAM and the cable.
— Protection during a stall (locked rotor) condition within the thermal limit of the VAM.
— Allowance for motor starting current to pass without interruption.

Copyright The Institute of Electrical and Electronics Engineers, Inc.
Provided by IHS under license with IEEE
No reproduction or networking permitted without license from IHS Not for Resale

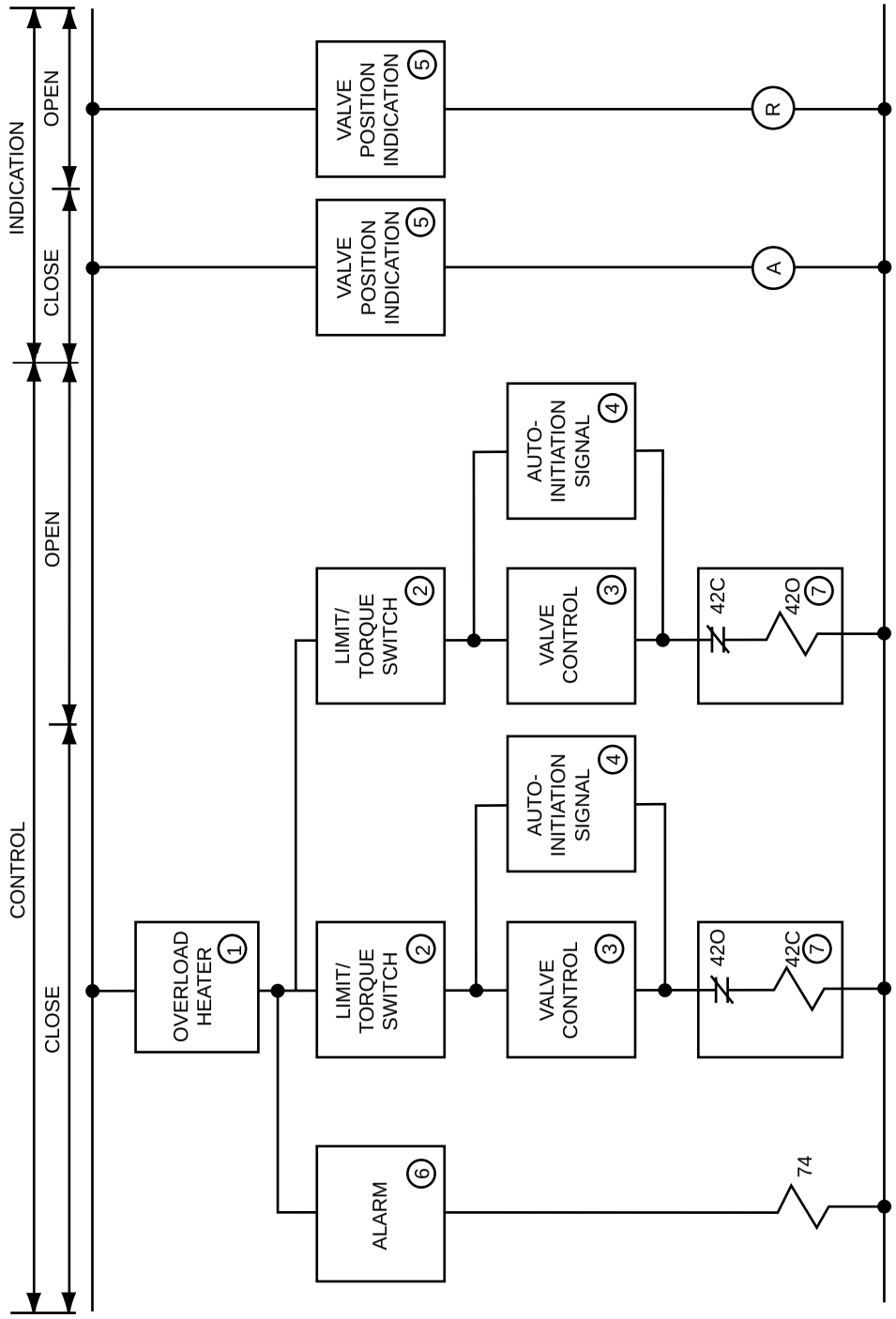

Figure 1—Block diagram for typical MOV control scheme

Copyright The Institute of Electrical and Electronics Engineers, Inc.
Provided by IHS under license with IEEE
No reproduction or networking permitted without license from IHS
Not for Resale

— Cable and containment penetration limits.
— Interrupting rating equals or exceeds requirements for type of circuit (ac or dc).

These requirements can be met by the use of time delay (UL Listed-Class RK-5) type fuses (see IEEE Std 242-1986).

a) Advantages

1) Fuses are typically available with third-party independent validation to provide interrupting capability of up to 200 000 A rms ac and 20 000 A dc in a small compact device.
2) Many sizes are available, allowing ease of coordination with other protective devices, especially for smaller loads.
3) There are no moving mechanical parts.
4) Some types of fuses have low resistance.
5) Both fault and overload protection are provided in one device.

b) Disadvantages

1) Cannot be reset, but has to be replaced.
2) It is possible to lose a single line phase (single phasing).
3) Cannot be nondestructively tested for its melt point characteristics that include arcing time to clear.

5.2.1 Fuse selection methodology

In order for the fuse to be sized, information regarding the VAM's rated nominal current, locked rotor current, duty cycle/jogging, temperature effects, and the stroke (operating) time of the associated valve is required. A combination of informational sources may include

a) Motor performance curves

b) Nameplate information

c) Diagnostic test result

d) In-Service Testing (IST) results

e) Stroke time calculation

These sources are discussed in more detail in IEEE Std 741-1990.

5.2.1.1 Selection for ac VAMs

5.2.1.1.1 Protection for single phasing

The probability of losing a single phase (single phasing) exists when fused switches are utilized in the valve control circuit. In the common application where the control power transformer (CPT) is across two of the three phases, the probability of single-phase operation is limited to one phase. Consideration should be given to detecting a blown fuse condition utilizing a blown fuse indicator or a loss of voltage relay to detect a blown fuse (see figure 2). The benefits gained by the use of any detection scheme should be evaluated relative to the circuit complexity and feasibility of qualification to IEEE Std 323-1974 and IEEE Std 344-1975.

5.2.1.1.2 Ambient temperature effects

Time delay fuse ratings are typically based on an ambient temperature of 25 °C. Higher or lower ambient temperatures about the fuse (within a panel, MCC, etc.) effect the continuous current-carrying capacity and melting (clearing) time of a fuse. Figure 3 is a representative plot of these characteristics for a time delay fuse; actual characteristics may vary between fuse types and manufacturers.

Copyright The Institute of Electrical and Electronics Engineers, Inc.
Provided by IHS under license with IEEE
No reproduction or networking permitted without license from IHS Not for Resale

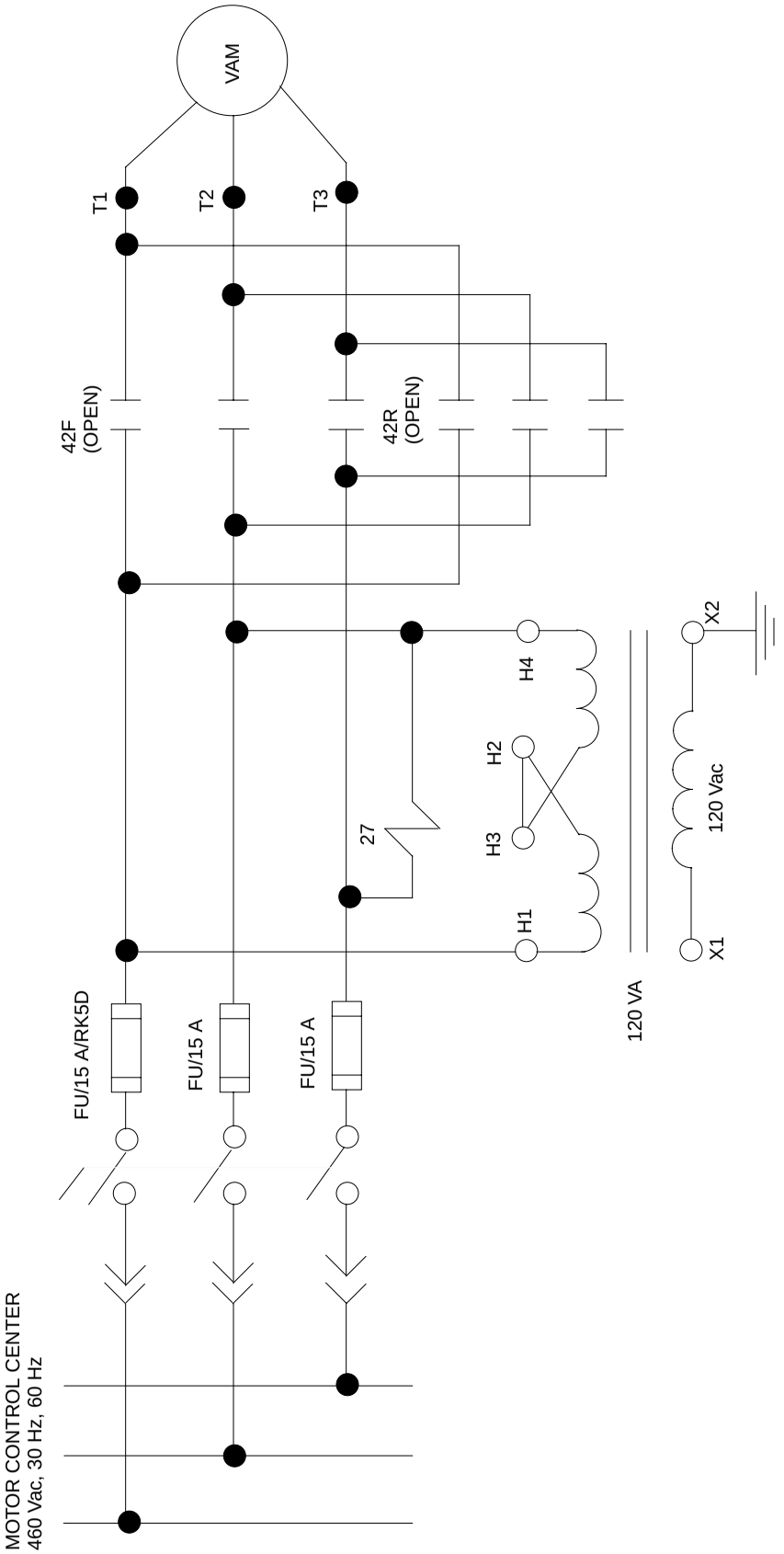

Figure 2—Typical fusing scheme

Copyright The Institute of Electrical and Electronics Engineers, Inc.
Provided by IHS under license with IEEE
No reproduction or networking permitted without license from IHS
Not for Resale

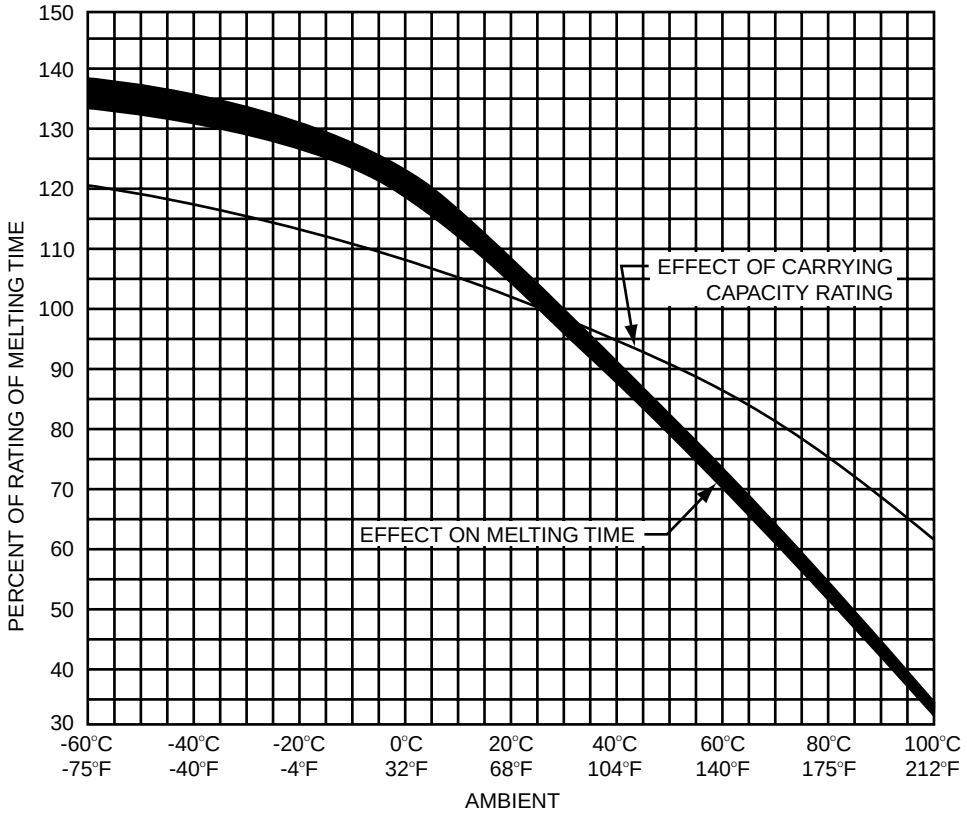

Figure 3—Effect of ambient temperature on operating characteristics of fuses

5.2.1.1.3 Correction for voltage variation

AC VAMs are sensitive to voltage variations. As voltage increases, running load current increases. The same relationship exists for locked rotor current [B1]. This relationship is further discussed in IEEE Std 741-1990. This greater current should be taken into account since the melt point of the fuse may be reached. Fuse sizing should consider the highest design base voltage that is expected.

As an example, if the VAM terminal voltage is 506 Vac, or 110% of rated 460 Vac, then the locked rotor current increases from 16 A to 18 A (see figure 4). This causes two effects:

— Current through the fuse increases, which decreases the melt time when the current is typically above 125% of the fuse rating.
— Heat input to motor insulation increases (proportional to the square of the current), which decreases the locked rotor withstand time.

The heat input to the motor insulation can be represented by I^2t for a short time period. At locked rotor, the maximum heat input a 10 ft·lbf (14 N·m) start motor can withstand at rated voltage without damage is: $(16\ A)^2$ locked rotor × (15 s) to 85° [From figure 4] = (3840) A·s. At a locked rotor current of 18 A, the with-

Copyright The Institute of Electrical and Electronics Engineers, Inc.
Provided by IHS under license with IEEE
No reproduction or networking permitted without license from IHS Not for Resale

stand time is $t = 3840/(18)^2 = 11.8$ s. The fuse should be selected to protect the motor by melting before this new withstand time.

A low VAM terminal voltage of 414 Vac or 90% of rated 460 Vac will cause locked rotor current (16 A) to decrease to 15 A (see the table in figure 4). The fuse selected should not have any adverse affects on motor insulation temperature rise capability time due to a slightly longer melt time. High voltage along with high fuse temperature is the worst-case scenario for the MOV to perform its intended function. The melt time of the fuse is multiplied by the corresponding percent relative to the ambient MCC temperature as determined from figure 3.

5.2.1.2 Selection for dc VAMs

DC VAM fuse selection should be performed in the same manner as described for ac VAMs and in annex B.

The exceptions are that single phasing need not be considered and that terminal voltage variations effect dc VAMs as follows:

a) *Locked rotor current:* The magnitude of the locked rotor current varies in direct proportion to the terminal voltage at a given temperature. This effect should be considered in the selection of the fuse. Typically, the locked rotor current quoted by the vendor is for the armature.

b) *Voltage variation:* Voltage variations have an insignificant effect on the motor current during dc VAM stroking, which has an effect on the stroke time due to the change in valve speed. This results in either a shorter stroke time for higher voltage, or a longer stroke time for lower voltage. As the variation in current is negligible, higher voltages do not compromise the thermal time-current capability of the VAM and, as such, have no effect on selection of the fuse. However, lower voltage may result in longer operating time and, thus, have the potential to result in spurious operation of the fuse, if it is not properly selected.

The time delay fuses chosen will usually have an ac rating. The fuse manufacturer shall be consulted to determine the dc fuse ratings. Fuse ratings for fuses used in dc systems shall envelope maximum and minimum system voltage for all operating conditions having an interrupting rating equal to or greater than expected available fault or short-circuit current. Ratings for ac or dc application should be based on national consensus methods.

5.3 Thermal contacts

The thermal contact is one type of thermal protector that can guard electric motors from overtemperature conditions. When the temperature limit of the thermal contact is exceeded, deflection of a bimetallic strip occurs. This deflection causes a contact to open and switch off the motor current. In order to protect the motor, the thermal contacts shall be installed at the critical/limiting locations for temperature in the motor. For example, if the winding is critical, then a contact should be installed in each winding.

a) Advantages

   1) The temperature is measured directly at the point where thermal damage is a concern. Therefore, environmental factors such as temperature, dust, insulation, and air density are not significant factors when protecting the motor. Thermal contacts allow maximum protection while minimizing the chances of inadvertent protection.

   2) The protection is independent from the load. The protection and operating times are not a concern. Varying torque loads are also not a concern since the thermal contacts are activated by temperature and not current.

   3) No additional impedance is added to the motor power feeder circuits.

Copyright The Institute of Electrical and Electronics Engineers, Inc.
Provided by IHS under license with IEEE
No reproduction or networking permitted without license from IHS Not for Resale

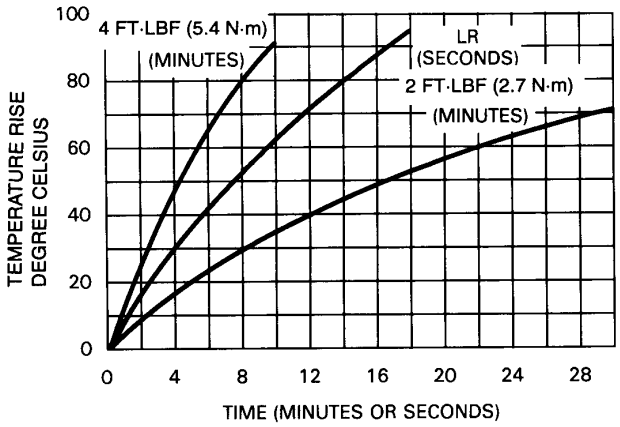

AMPERES		
VOLTS	RUN	LR
506	2.5	18
460	2.4	16
414	2.2	15

RELEVANT DATA

AMBIENT:	40 °C
AMPERES:	4.8/2.4
CODE:	L
CURVE NUMBER:	M1458
DUTY:	15 MIN
ENCLOSURE:	TENV
FRAME:	56
HERTZ:	60
HP (W):	1.3 (969.8)
INSULATION:	B
MANUFACTURER:	R
MOTOR TORQUE:	10 FT·LBF (13.5 N·m)
PHASE:	3
RPM:	3400
TEMPERATURE RISE:	85 °C
VOLTS:	230/460

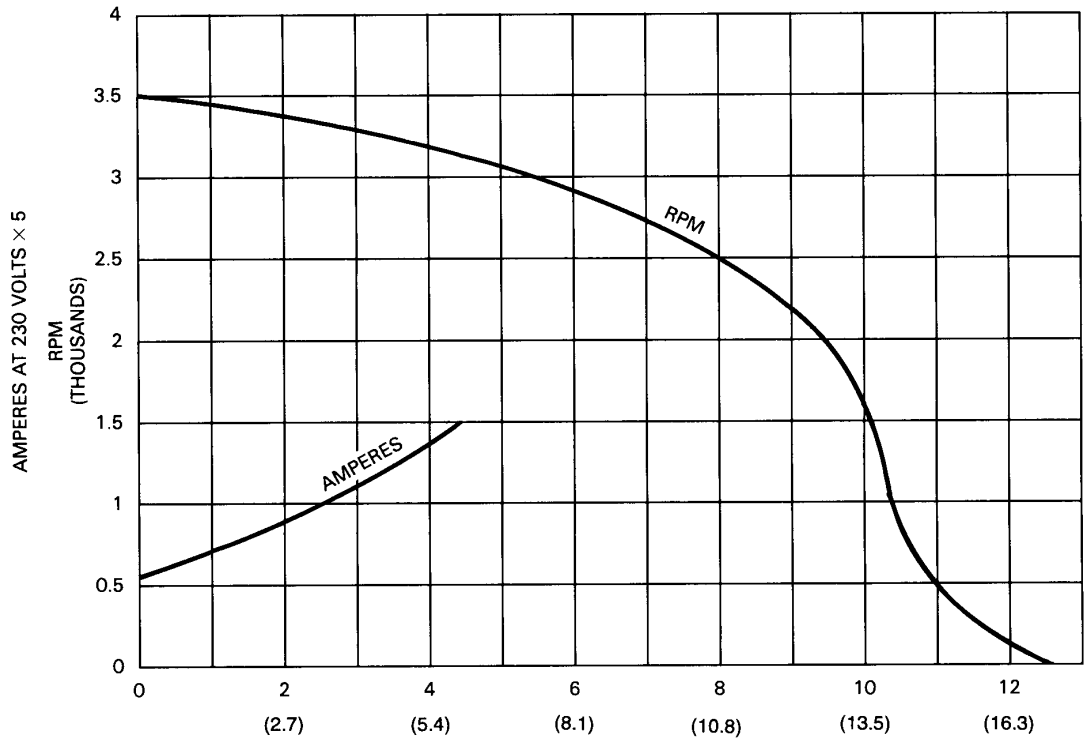

Figure 4—AC motor performance curves

Copyright The Institute of Electrical and Electronics Engineers, Inc.
Provided by IHS under license with IEEE
No reproduction or networking permitted without license from IHS
Not for Resale

4) Automatic reset; no operator action is required.

5) Reset time is dependent on ambient temperature and will vary from VAM to VAM.

6) Repeatability may not be adequate for high temperature applications.

b) Disadvantages

1) Two additional wires have to be installed and considered in the control circuit voltage analysis.

2) There is no practical testing method to ensure that the contacts are functioning properly when testing is required.

3) Rotor critical motors cannot be protected by thermal contacts in the stator.

4) *Automatic reset*—A change in plant operability status at an unknown time and without operator knowledge is possible and may have major (safety) system implications. A further evaluation of the automatic reset feature has to be performed and consideration given to providing indication (alarm) of the change in operability status to the operator.

5) Thermal contacts are supplied by the VAM supplier and are mounted permanently in the VAM motor. The VAM supplier should provide thermal contacts that protect the motor under all conditions. Typical temperature ratings of thermal contacts are 150 °C for motors with Class F insulation.

5.4 Resistance temperature detector (RTD)—resistors

Use of RTDs for protection is similar to thermal contacts and has the same advantages and disadvantages except that RTDs require control circuitry that can detect a resistance change. One disadvantage of the thermal contact that is overcome with the use of RTDs is that the RTD resistance can be measured with a high degree of confidence that the RTD is operating satisfactorily. Therefore, testing is not a concern and in fact can be done continuously if the proper controls are specified.

RTDs are temperature-dependent resistors that by definition change their resistance as the temperature changes. This resistance change has to be monitored by control equipment. When a resistance change consistent with the protection requirement is observed, the control circuitry interrupts power to the motor before damage occurs.

5.5 Molded case circuit breakers

Thermal-magnetic and magnetic-only circuit breaker selection for the short-circuit fault protection of the VAM circuit should consider

a) Magnitude of the motor full load current rating

b) Magnitude of the motor locked rotor current rating

c) Magnitude of the available short-circuit current

5.5.1 Magnetic-only circuit breakers

a) Advantages

1) Many sizes are available in a given frame size for ease of coordination with other protective devices, especially for small motor ratings.

2) They provide fault current interrupting capability.

Copyright The Institute of Electrical and Electronics Engineers, Inc.
Provided by IHS under license with IEEE
No reproduction or networking permitted without license from IHS
Not for Resale

3) They are available with adjustable trip setting ranging from three to ten times the circuit breaker trip rating.

4) Faults as low as 10 to 20 times motor full load current can be cleared in a matter of a cycle or two, thus limiting damage to the motor and interconnecting circuitry.

5) They provide circuit breaker convenience and are resettable.

b) Disadvantages

1) They provide only short-circuit protection for the motor and motor circuit. Motor overload and locked rotor protection have to be provided by other protective devices within the controller. A thermal overload relay is required for complete VAM protection.

5.5.1.1 Magnetic-only circuit breaker sizing/trip setting methodology

Continuous current rating of the magnetic-only circuit breaker should be selected on the basis of the recommendations of the circuit breaker manufacturer. The continuous current rating is chosen to be greater than 120% of motor full load current rating. This allows additional margin for heating effects.

The magnetic-only circuit breaker reacts to current waveforms within the first cycle. To account for the effects of manufacturing tolerances (±20%), system asymmetry (50%), and overvoltages (10%), a trip setting equal to approximately two times the motor nominal locked rotor current should be used. Similarly, the trip setting for dc application could equal approximately 150% of the motor nominal locked rotor current, as system asymmetry is not a consideration.

5.5.2 Thermal-magnetic circuit breakers

Thermal-magnetic circuit breakers combine the overload and instantaneous functions within a single device. Modern circuit breakers are designed and calibrated for ambient temperatures for operation at full nameplate trip rating.

a) Advantages

1) Provide breaker convenience
2) Testable

b) Disadvantages

1) The smallest typical thermal-magnetic breaker is rated at 15 A. A significant portion of installed and available VAMs have full load current ratings of less than 15 A.
2) A thermal overload relay is required to be coordinated for complete VAM protection.
3) They are not available with adjustable trip settings.

5.5.2.1 Thermal-magnetic circuit breaker sizing methodology

The continuous current rating of the thermal-magnetic circuit breaker should be selected on the basis of the recommendations of the circuit breaker manufacturer. Modern circuit breakers are designed and calibrated for ambient temperatures for operation at full nameplate trip rating. In general, the circuit breaker trip rating is chosen to be greater than 120% of the motor full load current rating. Higher trip ratings may be required to ensure coordination between breaker and motor thermal overload relay.

5.6 DC VAM surge protection

A discharge resistor or metal-oxide varistor should be used for dc VAMs to absorb the energy when the shunt field circuit is opened quickly. The device is placed in the circuit in parallel with the shunt field and should be sized sufficiently to dissipate the power.

Copyright The Institute of Electrical and Electronics Engineers, Inc.
Provided by IHS under license with IEEE
No reproduction or networking permitted without license from IHS Not for Resale

DC VAM designs do not require the use of starting resistors to protect the motor. However, 150 ft·lbf (203 N·m) and larger dc VAMs can have very high locked rotor currents, and it may be beneficial to use starting resistors to protect the reversing contactor or some other limiting component. Starting resistors should either allow for a current draw of at least five times the full load current or use a time delay relay to drop the starting resistor out before the VAM becomes mechanically loaded.

NOTE—Starting resistors reduce the voltage to the motor and subsequent motor torque.

6. Control

This clause includes considerations to be addressed in designing an MOV control circuit. A typical control circuit has been depicted in a block diagram layout in figure 1. Each block represents an individual portion of the control scheme that will be discussed in detail in the following subclauses. This clause provides suggestions for integrating the individual blocks into a complete control circuit such that the MOV can perform the required function for its application. EPRI NP-6660-D [B5] also provides guidance for selecting control, protection, and alarm functions that are consistent with typical MOV applications.

The first step in designing a control circuit is to obtain the specific system design requirements. The MOV system requirement data sheet (figure 5) can be used to document the valve functional requirements needed to develop the control circuit. The design of a control scheme is based on the valve application, system design requirements, valve design and type (including design limits), vendor requirements, and limitations of control devices.

Subclauses 6.1 through 6.6 provide a brief description of each block in figure 1 of the control logic, including advantages, disadvantages, and design considerations for each. This description, in combination with the MOV system requirements documented in figure 5, gives the parameters necessary to select a control configuration appropriate for the MOV control circuit.

Protection can be provided by various types of devices. For examples of these devices, see clause 5.

6.1 Thermal overloads (TOLs)

Sizing criteria developed in IEEE Std 741-1990 provides detailed guidance to ensure proper sizing. Block 1 of figure 1 represents the TOL section of the control scheme. The design options discussed in the following subclauses are provided for the use of TOLs.

6.1.1 Continuous protection

Detail A of figure 6 depicts a general TOL configuration for continuous motor protection for the intended service. This option is most desirable, since it provides continuous motor protection.

a) Advantages

   1) Continuous overload protection will de-energize the control circuit in case of a sustained overcurrent. The motor will be protected so that the valve can be stroked again after the TOL is reset.

b) Disadvantages

   1) De-energization of the control circuit due to an inadvertent TOL heater actuation could potentially interrupt valve travel before the desired position is achieved.

   2) Dependent upon TOL placement in the control circuit, protection for hot shorts in the control circuit may not be provided (see 6.10).

Copyright The Institute of Electrical and Electronics Engineers, Inc.
Provided by IHS under license with IEEE
No reproduction or networking permitted without license from IHS Not for Resale

VALVE TAG NO.: _____

SYSTEM: _____

1. What is the specific valve design (gate, globe, butterfly)?
2. What is the number of MOV limit switch mechanisms?
3. The valve control type is categorized as:
(full open/full closed, throttling, instantaneously reversible)?
4. What is the normal valve position?
5. Is the valve required to be torque or limit positioned open?
6. Is the valve required to be torque or limit positioned closed?
7. Is an auto-initiation signal required for the open direction?
8. Is an auto-initiation signal required for the closed direction?
9. Is valve position indication required?
10. Does the MOV require a key lock switch?
11. Is this control circuit required to be interlocked to other control schemes?

Figure 5—MOV system requirement data sheet

6.1.2 Selected bypass of TOL

Detail B of figure 6 depicts a TOL bypass configuration. This logic bypasses the overload function either when a safety injection signal is present, or continuously except for periods when the MOV is being tested, as discussed in U.S. Regulatory Guide 1.106 [B13]. A normally closed contact from the auxiliary bypass control circuit relay (95 on figure 6) (IEEE Std C37.2-1991) provides the means to bypass the overload. If an alarm or indication of the bypass is not provided, the operator will have no specific indication the thermal overload has occured.

a) Advantages
   1) While bypassed, de-energization of the control circuit during operation of the MOV due to inadvertent TOL actuation is eliminated.
   2) TOL protection is provided during nonbypassed periods.

--`,,`-`-`,,`,,`,`,,`---
Copyright The Institute of Electrical and Electronics Engineers, Inc.
Provided by IHS under license with IEEE
No reproduction or networking permitted without license from IHS Not for Resale

b) Disadvantages

1) If a bypass of the TOL is used in combination with a torque switch bypass, neither electrical nor mechanical protection is provided during the bypass period. Also, it is important to ensure that bypassing the TOL does not result in degrading other functions (motor control centers, cable systems) due to any sustained abnormal motor circuit currents that may be present (See [B2], [B13], and [B5].)

2) The VAM is not electrically protected while operating with the TOL bypassed. Therefore, motor degradation or burnout could occur if the valve were stroked beyond the duty cycle of the motor or if a locked rotor condition exists. The motor degradation, caused when the TOL was bypassed, could go undetected either

   i) During normal maintenance and render the actuator incapable of performing its intended function, or
   ii) During actuation in the presence of a safety injection signal.

   This is especially true if the TOL is bypassed and not alarmed. The additional bypass feature could degrade the overall reliability of the circuit.

3) Integrity of the bypass needs to be tested periodically.

4) Dependent upon TOL placement in the control circuit, protection for hot shorts in the control circuit may not be provided (see 6.10).

6.1.3 Alarm for overload

Detail C of figure 6 depicts a general configuration in which the TOL can be used as a nondisabling device. The TOL in this case is connected to alarm on an overcurrent condition without disabling the MOV. It is recommended that an alarm be provided in the control room for a TOL actuation.

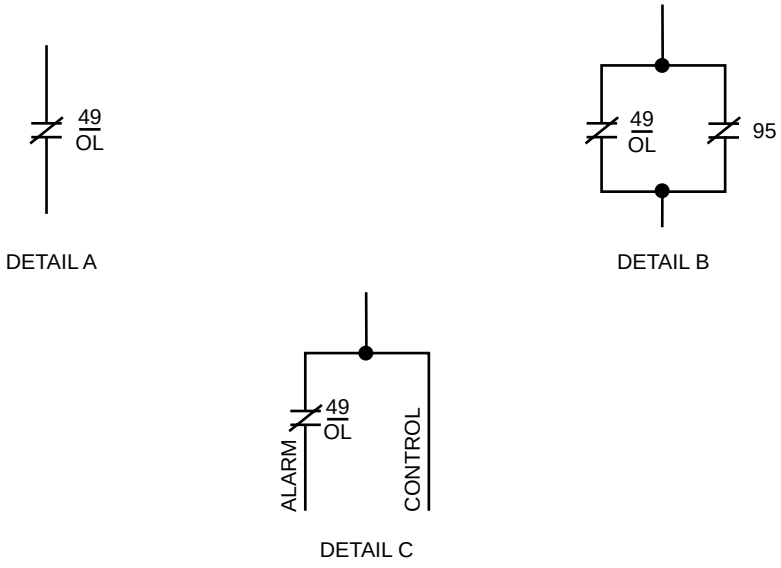

Figure 6—Overload heater configuration

a) Advantages

1) De-energization of the control circuit during operation of the MOV due to inadvertent TOL actuation is eliminated.

Copyright The Institute of Electrical and Electronics Engineers, Inc.
Provided by IHS under license with IEEE
No reproduction or networking permitted without license from IHS Not for Resale

2) There is prompt detection of VAM overloads. The alarm can be used to notify maintenance to check for motor degradation. However, rotor degradation is difficult to diagnose without special tests (see clause 7).

b) Disadvantages

1) Operators may not be able to act quickly enough upon receipt of an alarm to prevent the VAM from exceeding its thermal limits. It should be noted that if the control circuit utilizes an auxiliary contact off the contactor in parallel with the initiating signal or hand switch contact (see 6.3), then operator intervention may not be possible. If the torque switch is also bypassed, neither electrical nor mechanical protection is provided during the bypass period. Also, since the TOL does not de-energize the VAM, it is important to ensure that any sustained abnormal motor circuit currents do not result in the degradation of other functions.

6.2 Limit/Torque switches

The limit and torque switches provide a combination of control and protection for MOVs. Block 2 of figure 1 represents the limit/torque switch section of the control scheme. Caution has to be taken when combining limit/torque switch configurations with the valve control configurations (see 6.3), since the applications may require some interpretation. The objective of this combination is to ensure that the required MOV function is performed and that the equipment is protected from potential damage.

Limit switches open and close at a set position of the valve stem travel. These switches can be used to control opening and closing of the valve, provide position indication, bypass the torque switch, or provide an interlock function. Development of the limit switch setting is outside the scope of this guide.

Two or more limit switch assemblies are typically set to trip (change state) at pre-determined points relating to valve stem position. These switches have contacts that are either normally open or normally closed and may or may not be independently adjustable, depending on the manufacturer and the switch mechanism configuration. It is necessary to refer to a contact development chart such as the one presented in figure 7, which presents typical limit switch contact development for a multiswitch limit switch mechanism.

Depending on the number of limit switch contacts provided, the capability to set individually the switch contacts (i.e.,switch contacts may be grouped together, such that a group transfers at the same setpoint), and the number of limit switch contacts used (i.e., to control opening and closing of the valve, provide position indication, bypass the torque switch, or provide an interlock function), a sufficient number of contacts may not be available to perform the required functions. If possible, additional limit switch assemblies may be added to the actuator to provide the required number of limit switch contacts.

Torque switches are used to limit the actuator output torque to a selected value. The torque switch is used to de-energize the motor control circuit at a specified torque value. Development of the torque switch setting is outside the scope of this guide.

Certain manufacturers combine torque and limit functions into a single switch that can be utilized as a torque and/or limit switch depending on the mode selected.

Although any combination of limit and torque switches may be used to meet specific control requirements, this guide only examines the most common control strategies. The following are the open direction limit/torque switch combinations, with the appropriate subclause number for a detailed explanation included:

1) Torque control (no torque switch bypass) (6.2.1.1)
2) Limit control (6.2.1.2)
3) Torque control (torque switch bypassed during unseating) (6.2.1.3)
4) Limit control (torque protection backup) (6.2.1.4)

Copyright The Institute of Electrical and Electronics Engineers, Inc.
Provided by IHS under license with IEEE
No reproduction or networking permitted without license from IHS Not for Resale

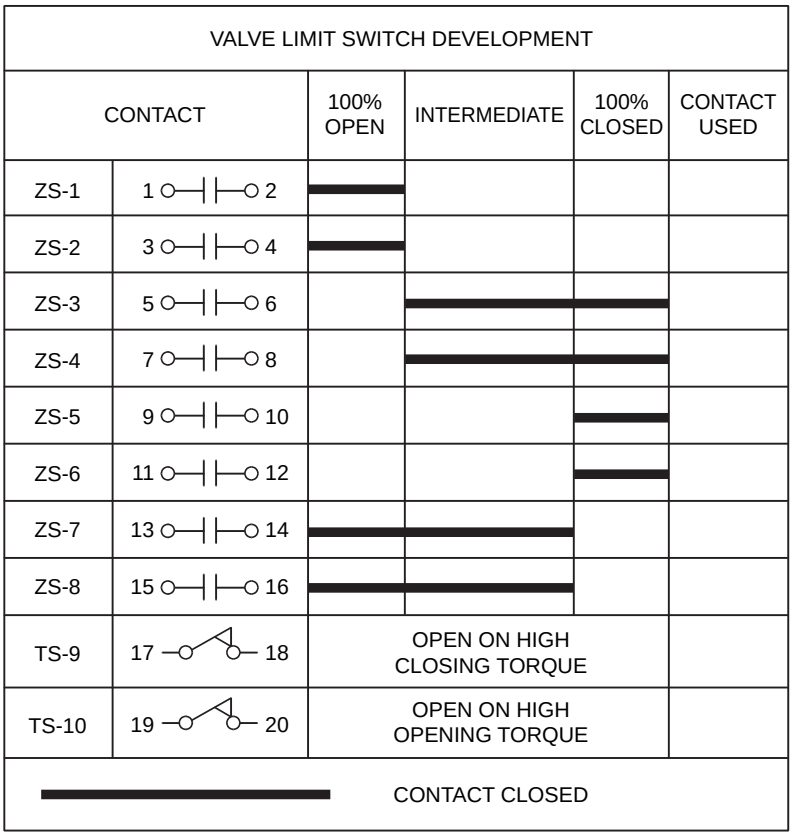

Figure 7—Two-rotor limit switch development (sheet 1 of 2)

For the close direction, the combinations are the same. Subclauses 6.2.2.1 through 6.2.2.4 contain the detailed explanations.

6.2.1 Open direction

The objective of the opening control logic is to open the valve to a position where design flow is achieved. Typically, valves are stopped by limit switches in the open direction.

If the valve open control circuit does not include a torque switch, the open control logic will not interrupt valve travel due to mechanical overloads.

Four typical open control configurations for limit and torque switches are detailed in figure 8 and are discussed in the following subclauses.

6.2.1.1 Torque control (no torque switch bypass)

This torque open configuration ensures that the torque switch is capable of interrupting motor operation during the opening valve sequence. A common application are three-way globe valves that require torque to backseat the valve. Gate and globe valves are generally not torque opened in order to prevent backseating of the MOV. Butterfly valves rarely utilize open torque control. They are usually opened and closed under limit control. Detail A of figure 8 illustrates this configuration.

a) Advantages
   1) Protection from mechanical overload is provided throughout the valve stroke.

Copyright The Institute of Electrical and Electronics Engineers, Inc.
Provided by IHS under license with IEEE
No reproduction or networking permitted without license from IHS
Not for Resale

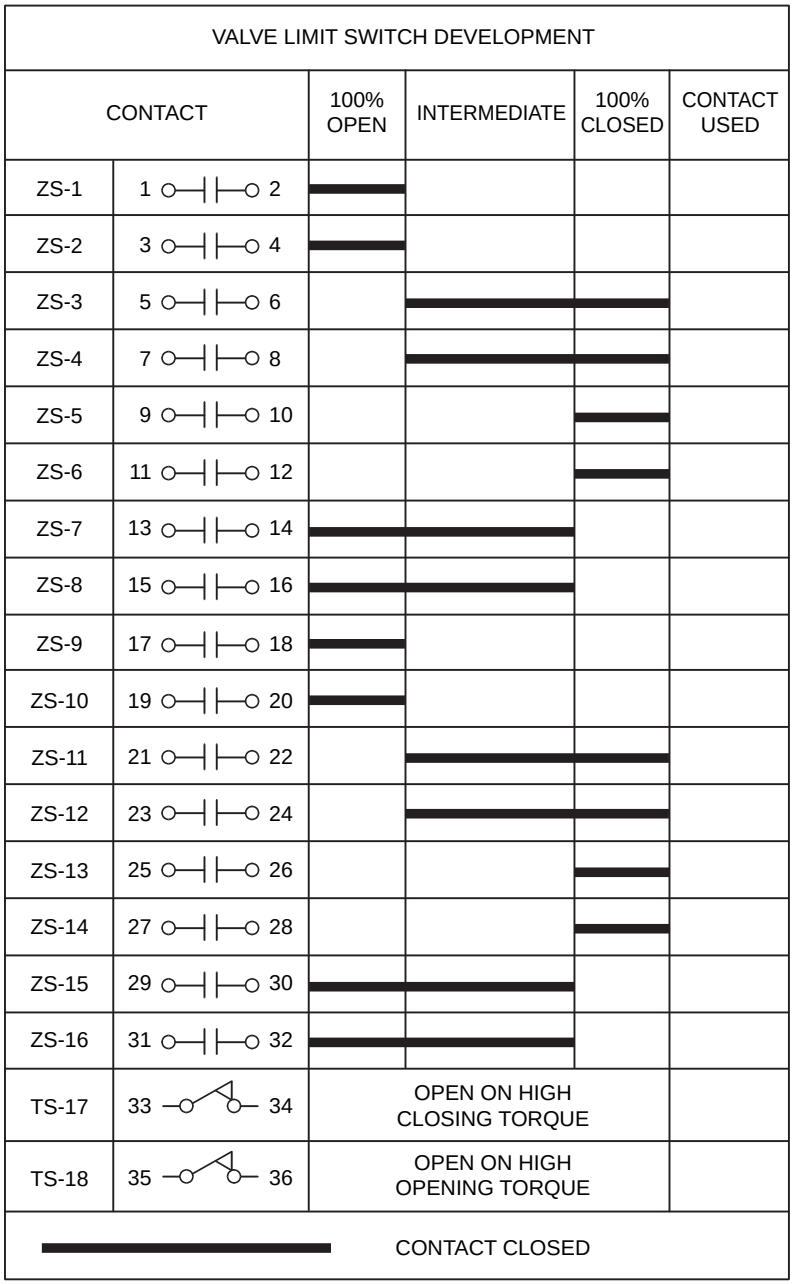

Figure 7—Four-rotor limit switch development (sheet 2 of 2)

b) Disadvantages

1) An increase in operating load above the torque switch setting occurring during valve travel will interrupt the valve travel before the desired open position is achieved.

2) An improperly set torque switch could prevent the valve from reaching its proper position.

6.2.1.2 Limit control

This limit open configuration ensures that the MOV will not be interrupted by torque switch actuation at any point during the valve opening sequence. Setpoints for valve travel can be adjusted to prevent backseating of the valve. This setting should be field verified in order to prevent actuator stall into the backseat. Also, con-

Copyright The Institute of Electrical and Electronics Engineers, Inc.
Provided by IHS under license with IEEE
No reproduction or networking permitted without license from IHS Not for Resale

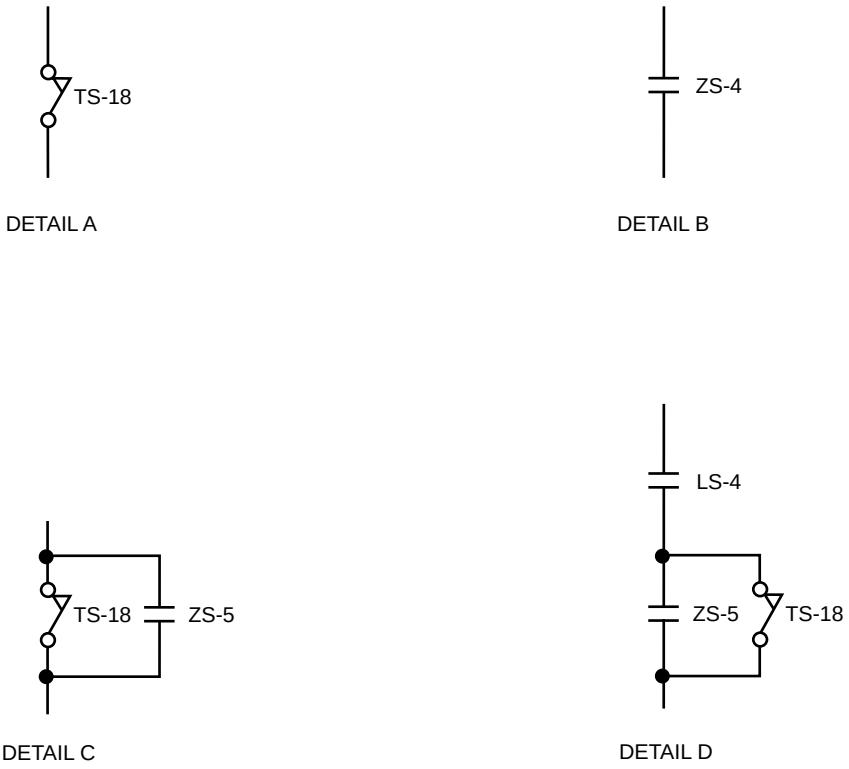

Figure 8—Limit/Torque switch configurations (open direction)

siderations for preventing a sustained overcurrent without motor protection should be addressed. Detail B of figure 8 illustrates this configuration.

a) Advantages
   1) Interruption of the VAM due to torque switch actuation during any portion of the valve travel is eliminated, allowing full actuator torque capability throughout the open stroke.
   2) Maximum flexibility is afforded in controlling full open stem position.
   3) Factors affecting torque switch setpoint adequacy are eliminated.

b) Disadvantages
   1) With the torque switch eliminated from the circuit, the actuator can potentially go to a stall condition at any portion of the valve travel. Therefore, the only remaining MOV protection is the motor (electrical) protection.

6.2.1.3 Torque control (torque switch bypassed during unseating)

This torque open configuration uses limit switch contacts to bypass the torque switch during the initial valve unseating sequence to prevent a spurious trip. Some actuators provide a mechanical bypass of the torque switch. This will ensure that the MOV will not be interrupted by the torque switch until after the valve is unseated. Motor protection during the bypass period should be analyzed to ensure that the potential for motor degradation or burnout is minimal. Detail C of figure 8 delineates this configuration.

Copyright The Institute of Electrical and Electronics Engineers, Inc.
Provided by IHS under license with IEEE
No reproduction or networking permitted without license from IHS Not for Resale

a) Advantages

1) Interruption of the VAM due to torque switch actuation during the valve unseating sequence is eliminated, allowing full actuator torque capability to unseat the valve.
2) Torque protection is provided for all but the unseating portion of MOV travel.

b) Disadvantages

1) With the torque switch eliminated from the circuit, the actuator can potentially go to a stall condition during the initial portion of the valve travel. Therefore, the only remaining MOV protection is the motor (electrical) protection.

6.2.1.4 Limit control (torque protection backup)

This limit open configuration uses a series parallel arrangement of limit and limit/torque switches to control valve travel. A limit switch contact is used to de-energize the control circuit after the desired open position is achieved. Also, a limit switch contact paralleling the torque switch is used to bypass the torque switch during the initial valve unseating sequence. This will ensure that the MOV will not be interrupted by the torque switch until after the valve is unseated. During the remaining stroke, the torque switch acts as a backup to the limit switch and will only actuate if the actuator exceeds the torque switch setting. The limit switch should be set to ensure valve travel is interrupted by the limit switch contact to prevent torque backseating of the valve. Detail D of figure 8 illustrates this configuration.

a) Advantages

1) Interruption of the VAM due to torque switch actuation during the valve unseating sequence is eliminated. Torque protection is provided for all but the unseating portion of the MOV travel.
2) MOV travel is normally stopped by the limit switch with the torque switch providing back-up protection (i.e., diverse travel stops are provided).
3) Maximum protection from mechanical overloads is provided.
4) Maximum flexibility is afforded in controlling full open stem position.

b) Disadvantages

1) With the torque switch eliminated from the circuit, the actuator can potentially go to a stall condition during the initial portion of the valve travel. Therefore, the only remaining MOV protection is the motor (electrical) protection.

6.2.2 Close direction

The objective of the closing control logic is to position the valve properly in the close direction.

Discussion of antihammering designs, which are a common addition to close torque control circuits, is contained in 6.9.

Four typical close control configurations for limit and torque switches are depicted in figure 9.

6.2.2.1 Torque control (no torque switch bypass)

This torque closed configuration ensures that the torque switch is capable of interrupting motor operation during the entire closing valve sequence. The torque switch should be properly set to enable the valve to achieve its proper position. Detail A of figure 9 illustrates this configuration.

a) Advantages

1) Protection from mechanical overloads is provided throughout the valve stroke.
2) Provides repeatable control of seating force.

Copyright The Institute of Electrical and Electronics Engineers, Inc.
Provided by IHS under license with IEEE
No reproduction or networking permitted without license from IHS Not for Resale

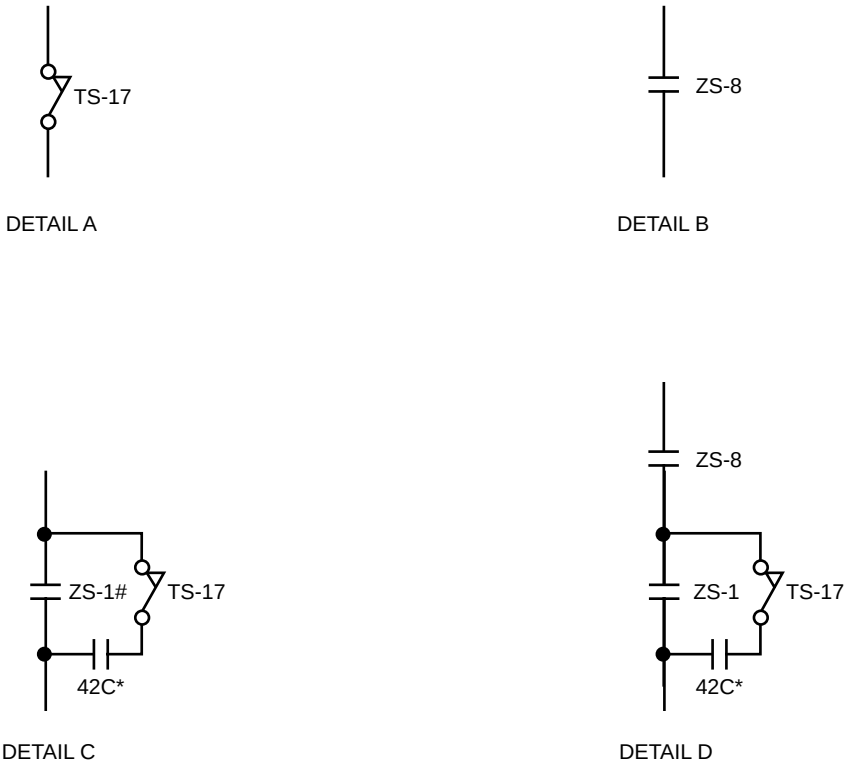

\# ZS-8 could be used in place of ZS-1.
* 42C contact is an option to prevent antihammering (see 6.9).

Figure 9—Limit/Torque switch configurations (closed direction)

b) Disadvantages
   1) An increase in operating load during valve travel could potentially disable the valve before the desired close position is achieved.
   2) An improperly set torque switch could prevent the valve from reaching its proper position.

6.2.2.2 Limit control

This limit close configuration ensures that the MOV will not be interrupted by torque switch actuation at any point of the valve closing sequence. A valve required to close for its design function should have limit switches set to ensure the valve completes its close stroke. This setting should be field verified in order to prevent actuator stall into the seat. In addition, the limit switch settings may need to be inspected and reverified on a regular basis as part of a routine maintenance program to insure that any changes in the valve seat do not result in a change in the ability of the MOV to close fully. Finally, considerations for preventing a sustained overcurrent without motor protection should be addressed. Detail B of figure 9 illustrates this configuration.

a) Advantages
   1) Interruption of the VAM due to torque switch actuation during any portion of the valve travel is eliminated, allowing full actuator torque capability throughout the close stroke.

Copyright The Institute of Electrical and Electronics Engineers, Inc.
Provided by IHS under license with IEEE
No reproduction or networking permitted without license from IHS
Not for Resale

2) Maximum flexibility is afforded in achieving full close stem position.

3) Factors affecting torque switch setpoint adequacy are eliminated.

b) Disadvantages

1) With the torque switch eliminated from the circuit, the actuator can potentially go to a stall condition at any portion of the valve travel. Therefore, the only remaining protection is the motor protection.

2) Setting of the close limit switch becomes critical to insure required closure.

3) The potential exists to damage MOV components with the torque switch bypassed.

6.2.2.3 Torque control (torque switch bypassed)

This torque closed configuration uses a limit switch contact to bypass the torque switch until just before the desired valve position is achieved. This will ensure that the MOV travel will not be prematurely interrupted until the valve has reached the desired position. Electrical motor protection during the bypass period should be analyzed to ensure that the potential for motor degradation or burnout is minimal. Detail C of figure 9 illustrates this configuration.

a) Advantages
1) Torque switch actuation during the bypass period is eliminated, allowing full actuator torque capability to close the valve.
2) The potential for motor stall is minimized except during the bypass period.
3) Provides repeatable control of seating force.

b) Disadvantages
1) A stall condition could potentially occur at any portion of the bypass period. Therefore, the only remaining MOV protection is the motor (electrical) protection.

6.2.2.4 Limit control (torque protection backup)

This limit closed configuration uses a series parallel arrangement of limit and limit/torque switches to control valve travel. The limit switch contact is used to de-energize the control circuit after the desired closed position is achieved. Also, a limit switch contact paralleling the torque switch is used to bypass the torque switch during the initial valve closing sequence. This will ensure that the MOV will not be interrupted by the torque switch during the bypass period. During the remaining stroke, the torque switch acts as a backup to the limit switch and will only actuate if the actuator exceeds the torque switch setting. The limit switch should be set to ensure valve travel is interrupted by the limit switch upon completion of the desired valve positioning. Detail D of figure 9 illustrates this configuration.

a) Advantages
1) Interruption of the VAM due to torque switch actuation during the bypass period is eliminated. Torque protection is provided for all but the bypass period of the MOV travel.
2) MOV travel is normally stopped by the limit switch, with the torque switch providing back-up protection.
3) Maximum protection from mechanical overloads is provided.

b) Disadvantages
1) With the torque switch eliminated from the circuit, the actuator can potentially go to a stall condition during the bypass period of the valve travel. Therefore, the only remaining MOV protection is the motor (electrical) protection.

Copyright The Institute of Electrical and Electronics Engineers, Inc.
Provided by IHS under license with IEEE
No reproduction or networking permitted without license from IHS Not for Resale

6.3 Valve control

This subclause discusses the logic that provides the ability to control valve travel. The control logic can be configured for either full stroke operation or throttling operation. It may also include logic permissive contacts in series with the manual switch. These contacts will ensure that the proper system alignment is achieved before valve travel is initiated.

The hand switch developments as detailed in the figures are typical configurations. Other switch contact developments can be utilized if evaluated specifically for the application. Block 3 of figure 1 represents the valve control section of the control scheme. Caution has to be taken when combining limit/torque switch configurations (see 6.2) with the valve control configurations since the applications are not always straightforward and may require some interpretation. The valve can be categorized as full open stroke/full closed stroke, throttling or instantaneously reversible as discussed in the following subclauses.

6.3.1 Full open/full closed

Full open/full close valve actuator control allows uninterrupted travel to the desired full open/full closed position. This control circuit utilizes an auxiliary contact off the contactor in parallel with the initiating signal or hand switch contact. Details A and B of figure 10 illustrate these configurations.

a) Advantages
   1) This control logic provides for uninterrupted valve travel, allowing valve to achieve desired open/closed position.
   2) This seal-in logic provides an antihammering feature, as discussed in 6.9.

b) Disadvantages
   1) Without additional control interlocks, the valve cannot change direction before full travel in one direction is completed.

6.3.1.1 Full close control with autotorque switch bypass

Figure 11 illustrates a variation utilizing a spring return control switch (momentary contacts), which initiates valve travel through a limit switch contact and seals in the circuit through the torque switch during a manual initiation.

This provides overtorque protection unless a maintained auto-initiation signal exists. In that case, the MOV travel will not be interrupted until after the desired bypass period, since the circuit is sealed-in through the limit switch contact. Figure 11 is shown with the torque and limit switches included since it is a specific configuration.

a) Advantages
   1) This configuration allows the actuator to provide its full capability.
   2) The seal-in logic provides an antihammering feature, as discussed in 6.9.
   3) Automatic overtorque protection is provided unless a maintained auto-initiation signal exists.
   4) Automatic torque switch bypass is provided during an auto-initiation of the MOV.

b) Disadvantages
   1) Without additional control interlocks, the valve cannot change direction before full travel in one direction is completed.
   2) A maintained auto-initiation signal has to be designed.

Copyright The Institute of Electrical and Electronics Engineers, Inc.
Provided by IHS under license with IEEE
No reproduction or networking permitted without license from IHS
Not for Resale

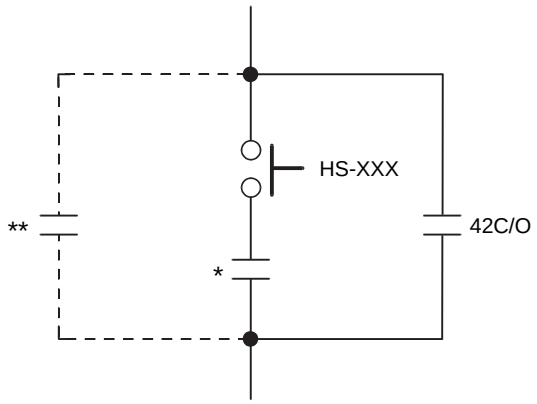

BLOCK NUMBER	CONTACT NUMBER		POSITION		
			CLOSE	CENTER	OPEN
TOP	1 ○ ○ 1a 2 ○ ○ 2a	F	X		
		B		X	X
BTM	3 ○ ○ 3a 4 ○ ○ 4a	F			X
		B	X	X	

CONTROL SWITCH HS-XXX
SPRING RETURN TO CENTER
(MOMENTARY CONTACTS)

DETAIL A

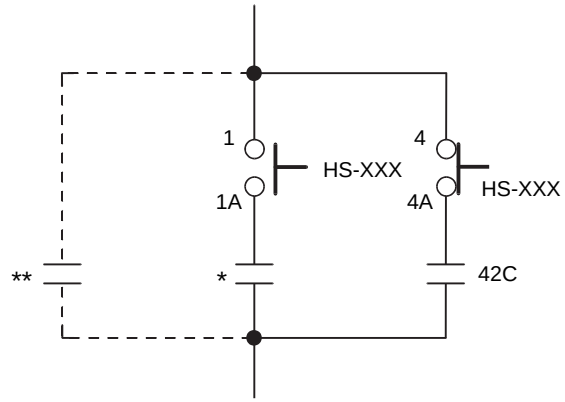

BLOCK NUMBER	CONTACT NUMBER		POSITION		
			CLOSE	CENTER	OPEN
TOP	1 ○ ○ 1a 2 ○ ○ 2a	F	X		
		B		X	X
BTM	3 ○ ○ 3a 4 ○ ○ 4a	F			X
		B	X	X	

CONTROL SWITCH HS-XXX
SPRING RETURN TO CENTER
(MOMENTARY CONTACTS)

DETAIL B
(TYPICAL CLOSED CONFIGURATION)

* Permissive contact from other control schemes (if required).
** Optional auto-initiation contact.

Figure 10—Valve control configurations (page 1 of 2)

6.3.2 Throttling control

A throttling or jog control circuit utilizes momentary type control switch contacts to achieve a desired valve position. Indication is key to achieving the desired valve position to provide a proper flow rate. Detail C of figure 10 illustrates this configuration.

Copyright The Institute of Electrical and Electronics Engineers, Inc.
Provided by IHS under license with IEEE
No reproduction or networking permitted without license from IHS
Not for Resale

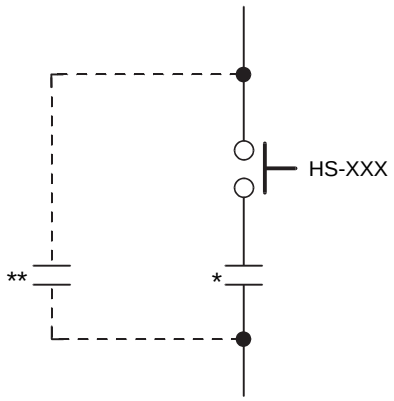

BLOCK NUMBER	CONTACT NUMBER		POSITION		
			CLOSE	CENTER	OPEN
TOP	1 ○ ○ 1a 2 ○ ○ 2a	F	X		
		B			X
BTM	3 ○ ○ 3a 4 ○ ○ 4a	F	X		
		B			X

CONTROL SWITCH HS-XXX
SPRING RETURN TO CENTER
(MOMENTARY CONTACTS)

DETAIL C

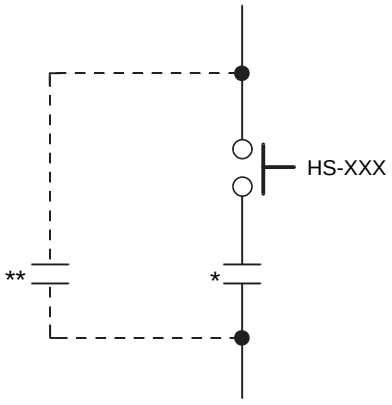

BLOCK NUMBER	CONTACT NUMBER		POSITION	
			CLOSE	OPEN
TOP	1 ○ ○ 1a 2 ○ ○ 2a	F	X	
		B		X
BTM	3 ○ ○ 3a 4 ○ ○ 4a	F	X	
		B		X

CONTROL SWITCH HS-XXX
MAINTAINED CONTACT

DETAIL D

* Permissive contact from other control schemes (if required).
** Optional auto-initiation contact.

Figure 10—Valve control configurations (page 2 of 2)

a) Advantages

1) This configuration provides for flow control to achieve system requirements.

b) Disadvantages

1) Repeated cycling places an added burden on the VAM and its protection, and it has to be evaluated.

2) Hammer blow is not present for repetitive jogs in the same direction.

Copyright The Institute of Electrical and Electronics Engineers, Inc.
Provided by IHS under license with IEEE
No reproduction or networking permitted without license from IHS
Not for Resale

6.3.3 Maintained contact—instantaneously reversible

An instantaneously reversible control circuit utilizes a maintained type control switch contact to allow an immediate change in the direction of the valve travel. Indication is key in achieving a desired valve position to provide a proper flow rate. Detail D of figure 10 illustrates this configuration.

a) Advantages

1) The maintained type control switch gives the ability to reverse direction of valve travel at any point.

b) Disadvantages

1) VAM currents due to instantaneous reversal can exceed the motor locked rotor current, and precautions have to be taken for selecting the breaker or fuse size.

6.3.4 Auto-initiation signal

The auto-initiation portion of the control logic provides the ability to initiate valve travel automatically without operator intervention. The circuit for auto-initiation is placed in parallel with the manual valve initiation circuit. Block 4 of figure 1 illustrates the logical location of the auto-initiation signal. Consideration should be given for required signals in both the open and closed direction.

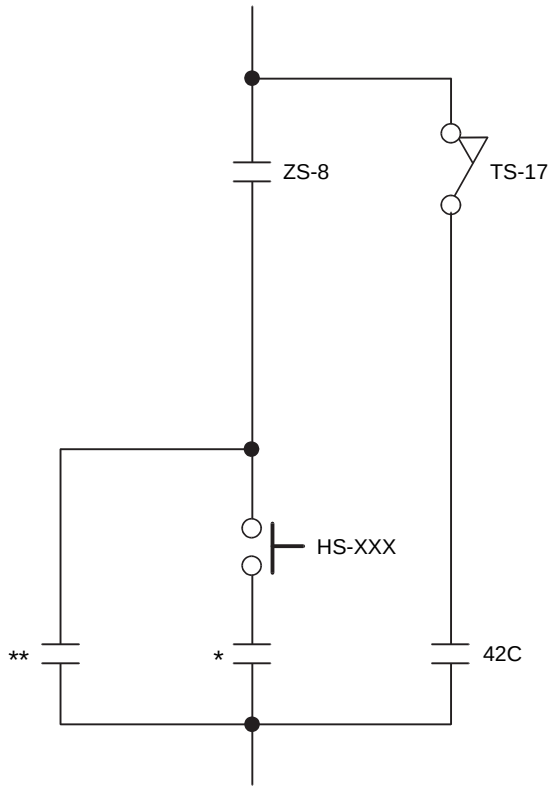

BLOCK NUMBER	CONTACT NUMBER		POSITION		
			CLOSE	AUTO	OPEN
TOP	1 ○ ○ 1a 2 ○ ○ 2a	F	X		
		B			X
BTM	3 ○ ○ 3a 4 ○ ○ 4a	F	X		
		B			X

CONTROL SWITCH HS-XXX
SPRING RETURN TO AUTO
(MOMENTARY CONTACTS)

* Permissive contact from other control schemes (if required).
** Auto-initiation contact.

Figure 11—Full close control with autotorque switch bypass

Copyright The Institute of Electrical and Electronics Engineers, Inc.
Provided by IHS under license with IEEE
No reproduction or networking permitted without license from IHS
Not for Resale

6.4 Valve position indication

Valve position indication provides remote indication of the valve stem position. Indication can be provided for the full stroke of the valve. The exact intermediate valve stem position is unknown since the open and closed lights are either illuminated or off. The preferred method is both lights on when the valve is between full open and full closed, allowing loss of power to be indicated by both lights off. Indicating lights are functionally controlled by the limit switch contacts, which have set points near the full stroke positions. Block 5 of figure 1 represents the indication section of the control scheme. This block consists of a limit switch contact used to represent open and closed positions. In the event that exact intermediate position indication is desired, an analog position indicator can be used.

Throttling valves may require more accurate indication to control flow, especially where no alternate flow indication is provided. If a valve is used to control a variable (flow or temperature), then the preferred method is to provide indication of that variable at the control location. Accurate indication of the fully closed position is critical, since a substantial leakage can pass through any valve that is partially open.

The number and type of limit switch mechanisms provided with the MOV and the ability to adjust the setpoint independently will determine the capability of providing both accurate position indication and control functions.

MOVs that do not have valve position indication are referred to as “blind valves.” Valves of this type do not provide the valve status to an operator.

6.5 Alarms

Torque switch contacts can be used in alarm circuits. Alarms associated with these switches are used to inform the operators that an MOV has failed to open or close properly or that the valve is not in the desired position. Alarms can also be used to identify situations where the capability of the MOV has degraded. This indication of degradation can be obtained in MOV applications when the torque switch is not used for either control or protection. The torque switch can be set to actuate an alarm at a torque above that normally required for operation.

The TOL can be included in an alarm circuit to indicate when an overload condition occurs. It is recommended that an alarm be provided in the control room for a TOL actuation. This TOL configuration and the considerations for alarming on an overload condition are detailed in 6.1.3. Another option is to have the valve position that indicates that lights go out when an overload actuation occurs. This option is not desirable since the loss of valve position indication could also be the result of a loss of power. In general, the alarms section of the control scheme acts as an indication for loss of power. In the event that power is lost, the normally energized alarm and status indication relay would initiate the alarm function. Block 6 of figure 1 represents the alarm section of the control scheme. The alarm would indicate either a loss of control power or a TOL trip. Additional indicators such as a valve indicating a light being off and/or a separate TOL contact alarm may be needed to distinguish between the two.

This configuration utilizes an overload contact for periods where an overcurrent exists and provides indication of potentially damaging conditions. If protection is not provided in addition to the alarm function, equipment damage can occur, which could prevent the valve from performing its required function.

6.6 Motor contactor

The motor contactor energizes the VAM. The MOV utilizes reversing starting contactors. The contactors control the direction of motor rotation by reversing phases on ac motors. DC motors can be reversed by interchanging the armature leads on compound wound motors or by interchanging either the armature or

Copyright The Institute of Electrical and Electronics Engineers, Inc.
Provided by IHS under license with IEEE
No reproduction or networking permitted without license from IHS Not for Resale

field leads on shunt wound motors. The open and close contactors are interlocked to prohibit both contactors from closing at the same time. Block 7 of figure 1 represents an electrically interlocked contactor arrangement for the forward control circuit. This configuration uses a contact from the reversing contactor in series with the forward contactor coil to ensure operation in only one direction. The energization of the coil closes the forward or reversing contacts in the power circuit that initiates valve travel. A mechanical interlock or a combination mechanical and electrical interlock between the two contactors can also be employed.

6.7 Interlocks

MOV control circuits typically use limit switch contacts to interlock with other control schemes. These interlocks are used to initiate or disable the function of other control logic. Limit switch contacts as detailed in figure 7 are used to provide this function.

Limit switch setting determinations are established based on valve function, actuator and valve design, and plant policy and are outside the scope of this guide.

Limit switch set points shall consider not only the opening or closing position requirements of the applicable system but also the interfacing system requirements. Changes to the limit switch settings can affect the original intent of the interlock function. An analysis should be performed for interlock process considerations when a set point change is required to the valve position limit switch.

6.8 Hardware and material

The proper selection of hardware and material is part of the overall design process of control circuits development. A key aspect in the selection of hardware is to select properly components that are compatible with the circuit in which they are used. Focus should be placed on selecting components that are rated for their application (i.e., ac versus dc system) over the full range of design power supply considerations. Industry standards, catalogs and manuals from manufacturers, and other applicable guides and standards should be utilized for the purpose of detailed design and selection of equipment, hardware, and material.

Special attention should be given to the CPT sizing and the CPT secondary fuse size for ac MOVs, especially during degraded voltage conditions. Transformer loading and voltage drop have to be considered during inrush conditions for the devices energized from the CPT (contactors, auxiliary relays). Also, the conductor size (and length) of the cables/wires used in the CPT secondary control circuit have to be included when performing voltage drop calculations. This voltage drop calculation verifies that the starter coil has sufficient voltage available to pick up the starter coil. The coil drop-out voltage should also be considered. See NEMA ST 1-1988 for additional information on CPTs.

The contactor sizing should also be given special attention. Contactors are normally selected based on the horsepower rating of the motor. However, the locked rotor current of a VAM, compared to a NEMA Design B motor for the same horsepower rating, may be higher. Therefore, the locked rotor current of the VAM should be used in selecting the contactor. As an example, the VAM represented by the data in figure A5 is rated at 19.8 hp (14.8 kW), with a locked rotor current of 234 A. A NEMA size 2 contactor [rated for 25 hp (19 kW)] would be selected based on the horsepower rating of the VAM (see NEMA ICS 2-1993, section 321). However, a size 2 starter is only rated for 210 A locked rotor current (see NEMA ICS 2-1993, section 327). Therefore, based on the locked rotor current, a size 3 starter [rated at 418 A locked rotor current, 50 hp (37 kW)] will be required.

6.9 Valve antihammering

Since the torque switch is responsive to the motion of the gear train, the desired actuator design for any torque control configuration would include a self-locking gear train or valve stem/drive sleeve. A self-lock-

Copyright The Institute of Electrical and Electronics Engineers, Inc.
Provided by IHS under license with IEEE
No reproduction or networking permitted without license from IHS Not for Resale

ing actuator will not backdrive after power is interrupted to the motor. Therefore, when the torque switch opens and de-energizes the VAM, the actuator will hold its position and not allow the torque switch to reclose. A nonlocking actuator could allow the torque switch to reclose after the motor is de-energized. If the torque switch recloses with an existing auto-initiation signal, the VAM could be energized, resulting in repeated closure attempts or valve hammering. Valve hammering could result in damage to the MOV.

Antihammering logic prevents the motor from re-energizing after the motor has initially tripped. Typical antihammering logic uses a contact of the close contactor in series with the torque switch. The valve close signal energizes the close coil, closing the auxiliary contact of the contactor that is in series with the torque switch. This keeps the motor control circuit energized until the torque switch contacts open, which de-energizes the motor control circuit. De-energizing the circuit opens the contact in series with the torque switch. This arrangement does not allow for the energization of the control circuit after initial trip, since the contact in series with the torque switch is open.

The auxiliary contact (42C) (see IEEE Std C37.2-1991), as shown in Details C and D of figure 9, prevents the valve from hammering. The seal-in contact for a full open/closed valve also prevents hammering.

6.10 Other considerations

A typical control circuit has been depicted in a block diagram layout presented as figure 1. This figure depicts the individual portions of the control scheme in a specific series configuration. This series configuration is a typical layout for the control circuit. The specific ordering of the individual portions can be changed without changing the function of the scheme. For example, the overload heater block of the scheme can be shown at the bottom of the scheme, below the open and close contactors. This configuration would not alter the function of the scheme.

Consideration has to be given to the ordering of the individual portions of the control circuit, such as the number and length of cables required in the scheme, fire protection considerations, etc. [B1]. However, if the overload heater is at the bottom of the scheme, as noted above, then the TOL cannot be included in an alarm circuit to indicate when an overload condition occurs.

6.11 Example

An example motor operated valve control circuit designed in accordance with the guidelines outlined herein is included as annex C.

7. Motor condition tests and inspection overview

This clause discusses in situ tests and inspections that can be performed to provide indication of VAM condition. It does not discuss tests to determine valve actuator condition. Several diagnostic systems have been developed to test actuator operation. However, these systems do not fully test the actuator motor. They primarily test the mechanical condition of the actuator and valve. Many of these tests also provide a motor current signature or motor current derived signature, which can be compared from test to test for trending. The tests described in 7.1 and 7.2 are used to determine actuator motor condition. These tests may be done on a time basis for condition monitoring or a demand basis for condition confirmation.

The following common tests are discussed: high potential (7.1.1); insulation resistance (megohmmeter) (7.1.2); polarization index (7.1.3); winding resistance (7.1.4); and capacitance (7.1.5). The following developing tests and inspections are discussed: borescopic inspection (7.2.1); surge or impulse tests (7.2.2); stator RTDs (7.2.3); and motor current frequency content analysis (7.2.4).

Copyright The Institute of Electrical and Electronics Engineers, Inc.
Provided by IHS under license with IEEE
No reproduction or networking permitted without license from IHS Not for Resale

While the tests discussed in 7.1 have been done for years, they generally do not provide information useful for condition trending. They test the stator. Rotor condition is not determined.

The tests and inspections described in 7.2 were developed relatively recently. They were developed to provide additional information concerning motor condition. They have not been used widely. Knowledge, techniques, and training for their application are still being developed. However, they provide information concerning the rotor as well as the stator. They show promise as predictive tools. They should be monitored and periodically evaluated for application.

All of this discussion is oriented towards ac motors. The first test group is also used on dc motors. More sophisticated techniques have not been developed or applied to dc motors. As increased reliability is desired, change is likely.

NUREG/CR-4939 [B10] reviews motor performance evaluation, maintenance practices, and functional indicator tests for small electric motors respectively. It discusses motor tests and the results of the tests in great detail. Among other information, this study provides information on the usefulness of various tests on installed motors. Users of this guide should review this report for more information.

Commonly used VAM tests will indicate motor stator condition. Identification of degradation trends is difficult. Developing tests show promise for indicating rotor condition. However, they have not been used sufficiently for conclusive anomaly detection and cause determination.

7.1 Common tests

7.1.1 High potential (hi-pot)

This test applies a high ac voltage between the installed motor winding and ground (frame). The voltage is typically two times rated voltage plus 1000 V for 1 min or 1 s at 1.2 times the 1 min value. It is typically done at motor assembly completion as a proof test.

Repetitive hi-pot tests are not normally done on small motors. Testing from the motor control center applies the hi-pot to the cable and winding. See NEMA MG 1-1993, Parts 3 and 12, for additional information on hi-pot testing.

a) Advantages
   1) It verifies that the winding insulation system is in good condition.

b) Disadvantages
   1) The test may be destructive.
   2) Fault current on insulation failure is limited only by the hi-pot source impedance.
   3) The test provides no indication of ac rotor condition.

7.1.2 Insulation resistance (megohmmeter)

This test typically applies 500–1000 Vdc to the motor cable and winding. It is frequently used after a problem to determine the stator winding condition. (See IEEE Std 43-1974 and IEEE Std 432-1992.) DC motors have electrically separate windings. Thus, one winding can be tested with the others grounded.

a) Advantages
   1) It verifies that the winding insulation system is in good condition.
   2) Test equipment is readily available and portable.

Copyright The Institute of Electrical and Electronics Engineers, Inc.
Provided by IHS under license with IEEE
No reproduction or networking permitted without license from IHS Not for Resale

b) Disadvantages
   1) Installed VAM testing includes both the cable and winding. Identification of the cause of the low resistance reading will require motor determination.
   2) The test provides no indication of ac rotor condition.
   3) This test will not detect turn-to-turn shorts.
   4) Acceptance criteria are not well defined.

7.1.3 Polarization index

This test is performed by applying an insulation resistance (megohmmeter) test to a motor for 10 min. The 10-min reading is divided by the 1-min reading. This ratio has to be greater than one. A ratio of two is desired. A reading that varies up and down over the test interval, or that has a ratio less than one, indicates a problem such as moisture in the motor.

It is frequently used after a problem to determine the stator winding condition. (See IEEE Std 43-1974 for more information.) DC motors have electrically separate windings. Thus, one winding can be tested with the others grounded.

a) Advantages
   1) It verifies that the winding insulation system is in good condition.
   2) Test equipment is readily available and portable.
   3) It can be readily performed as part of insulation resistance testing.

b) Disadvantages
   1) Low readings for the installed VAM may be due to the cable or winding. Additional testing is required to find the cause.
   2) AC motor windings frequently have an internal common connection. Thus, winding-to-winding insulation condition is not tested.
   3) The test provides no indication of ac rotor condition.

7.1.4 Winding resistance

The winding is checked at manufacture for equal winding resistance within ±5%. Winding resistance is measured using a low-value resistance instrument. DC motor shunt windings will need a high-value resistance instrument. On ac motors, line-to-line resistance is measured.

Installed VAM winding resistance measurement provides several information points. The winding is checked at manufacture for balance within ±5%. Comparison testing before cable connection will verify the received condition. Subsequent testing is routinely done from the motor control center. Thus, both cable and winding resistance is measured. Installed winding measurements will measure more than one winding. Determine winding configuration to determine what windings are measured.

Due to short run times, dc motor brushes and commutators normally do not wear significantly. However, brush-to-commutator resistance will affect installed measured armature resistance. Manufacturers measure armature resistance directly on the commutators. Installed measurements from the motor control center (MCC) will include brush-to-armature resistance. (See IEEE Std 112-1991, IEEE Std 113-1985, IEEE Std 118-1978, and IEEE Std 119-1974.) DC motors have electrically separate windings. This test is frequently used after a problem to determine winding condition.

a) Advantages
   1) An initial to later test result comparison can provide some indication of turn-to-turn winding faults.
   2) Test equipment is readily available and portable.
   3) Motor-to-cable splice condition is monitored.

Copyright The Institute of Electrical and Electronics Engineers, Inc.
Provided by IHS under license with IEEE
No reproduction or networking permitted without license from IHS Not for Resale

4) It verifies that a large portion of the winding does not have a turn-to-turn short.
5) It verifies the dc VAM shunt winding has not opened.
6) DC motor armature commutator and brush condition can be checked.

b) Disadvantages
1) Installed ac VAM testing measures more than one winding at a time. (Either two windings in series for a wye connection or one winding paralleled by the other two windings in series for delta windings.)
2) Testing from the MCC tests the cable and winding. Due to cable resistance, turn-to-turn shorts may not be identifiable.
3) The test provides no indication of ac rotor condition.

7.1.5 Capacitance

This test measures winding-to-ground capacitance using a capacitance bridge. As insulation ages, its dielectric constant can change. This alters the capacitance of the winding. In addition, water or moisture in or on the winding will change the capacitance. As a result, the dielectric properties and capacitance normally do not change if the windings remain free from moisture or other contaminants.

Capacitance variation is a change indicator. Changes are due to insulation system property degradation. Present insulation systems are high-performance insulating materials. They have a high temperature limit compared to normal operating temperatures. They do not degrade significantly with time due to normal or operating temperature. As a result, the dielectric properties and capacitance normally do not change.

a) Advantages
1) This test provides information concerning insulation quality and surrounding conditions.
2) Test equipment is readily available and portable.
3) An initial and later test results comparison can provide some indication of winding insulation condition. (This is a condition trending technique, not a one-time proof test.)

b) Disadvantages
1) The entire winding normally is tested at one time.
2) Testing from the MCC tests the cable and winding. Capacitance changes may be due to either cable or winding changes. Cause identification will require additional testing.
3) The test provides no indication of ac rotor condition.
4) VAM motor sizes are relatively small. Absolute capacitance values are small.

7.2 Developing condition tests and inspections

7.2.1 Borescopic examination

After finding rotor squirrel cage distress indications on motors removed for other reasons, an in-place rotor examination technique was developed [B6]. End bell drain plugs are removed and a borescope inserted. The rotor shorting rings are examined for discoloration or metallic beads. Both are signs of excess heat or partial melting. Motors with abnormal indications are evaluated and replaced if necessary.

a) Advantages
1) AC rotor condition is evaluated.
2) High rotor heating areas will be found.
3) Overload conditions not indicated by TOL trips may be found.

b) Disadvantages
1) The test is not applicable to dc motors.
2) The end bell drain plugs have to be removed.
3) Various sizes of borescopes are required.

Copyright The Institute of Electrical and Electronics Engineers, Inc.
Provided by IHS under license with IEEE
No reproduction or networking permitted without license from IHS Not for Resale

4) Quantitative evaluation criteria have not been established.
5) Stator winding condition is not tested.
6) Use in a radioactively contaminated area can be difficult.
7) The test is sensitive to the test personnel experience.
8) The test has been used on a limited basis, and therefore industry experience is still being developed.

7.2.2 Surge or impulse tests

Surge or impulse testing applies a step or sharp ringing function to one winding. The other windings are monitored for their response. Since the other windings are magnetically coupled to the excited winding through the rotor, rotor condition is also evaluated. If a turn-to-turn short is present, the response is damped or abbreviated. This technique has been used mostly on small industrial motors.

a) Advantages
   1) AC stator and rotor condition is evaluated.
   2) Turn-to-turn faults will be indicated.
   3) Rotor faults will provide a different indication than a good condition rotor.
   4) Overload conditions not indicated by TOL trips may be found.

b) Disadvantages
   1) The evaluation is subjective.
   2) Quantitative evaluation criteria have not been established.
   3) The test has been used on a limited basis, and therefore industry experience is still being developed.
   4) The test is sensitive to the test personnel experience.
   5) Since an impulse is applied, the winding is stressed.

7.2.3 Stator RTDs

Some VAMs have RTDs installed in the stator windings. These may be used for motor overload indication and protection. The RTD resistance may be measured as the MOV is stroked. This will indicate stator winding heating that can be trended to motor load over time.

a) Advantages
   1) Stator condition is evaluated.
   2) Turn-to-turn faults will be indicated. (Note that sensitivity to faults in stator areas remote to the RTD will be reduced.)
   3) Overload conditions not indicated by TOL trips may be found.

b) Disadvantages
   1) Quantitative evaluation criteria have not been established.

7.2.4 Motor current frequency content analysis

In this technique, the motor is used as a transducer. Motor current is converted from the time domain to the frequency domain by Fast Fourier analysis. The amplitude of each of the motor current component frequencies can be evaluated to identify motor problems. In addition to identifying broken rotor bars, mechanical problems and slip frequency (motor speed) can be identified.

This technique is being pursued and developed by various organizations. One variation was developed as a result of U.S. Nuclear Regulatory Commission research. Distinguishing electrical from mechanical defects depends on training, experience, and troubleshooting ability of test personnel. Additional information can be found in NUREG CR-4234 [B9] and EPRI GS-6589-L [B4].

a) Advantages
   1) It can be done remotely.

Copyright The Institute of Electrical and Electronics Engineers, Inc.
Provided by IHS under license with IEEE
No reproduction or networking permitted without license from IHS Not for Resale

2) Rotor condition is evaluated.
3) Faulted rotors provide different indications than do good rotors.
4) Motor speed is indicated.
5) Some mechanical problems are also indicated.

b) Disadvantages
1) Stator insulation condition is not tested.
2) Quantitative evaluation criteria are not yet established.
3) The test has been used on a limited basis, and therefore industry experience is still being developed.
4) The test is sensitive to the test personnel experience.
5) Training criteria are not yet developed.

8. Bibliography

[B1] Appendix R to 10 Code of Federal Regulations Part 50, “Fire Protection Program for Nuclear Power Facilities Operating Prior to January 1, 1979.”

[B2] Baxter, F. D. “The Dangers of Bypassing Thermal Overload Relays in Nuclear Power Plant Motor Operated Valve Circuits,” *IEEE Transactions on Power Apparatus and Systems*, vol. PAS-99, no. 6, pp. 2287–2291, Nov./Dec. 1980.

[B3] Beeman, Donald, *Industrial Power Systems Handbook*. New York: McGraw Hill Book Company, 1955, pp. 266–269.

[B4] EPRI GS-6589-L, *The Detection of Broken Bars in Motors*, Jan. 1990.

[B5] EPRI NP-6660-D, Research Project 2814-6, *Application Guide for Motor-Operated Valves in Nuclear Power Plants*, Final Report, Mar. 1990.

[B6] Kueck, J., “An Investigation of Magnesium Rotors in Motor-Operated Valve Actuators,” *IEEE Transactions on Energy Conversion*, vol. 3, pp. 40–43, Mar. 1988.

[B7] Motor Operated Valve Users Group (MUG) Meeting Minutes, Aug. 1992; available from MUG Coordinator, Nuclear Utility Services, 2650 McCormick Drive, Clearwater, FL 34619, USA.

[B8] NUREG-1296, *Thermal Overload Protection for Electric Motors on Safety-Related Motor-Operated Valves*, Generic Issue 11.E.6.1, June 1988.

[B9] NUREG/CR-4234, *Aging and Service Wear of Electric Motor-Operated Valves Used in Engineered Safety-Feature Systems of Nuclear Power Plant*s, Aug. 1989.

[B10] NUREG/CR-4939, *Improving Motor Reliability in Nuclear Power Plants*, Nov. 1987.

[B11] Rebbapragada, R.V., “Design Features and Protection of Valve Actuator Motors in Nuclear Power Plants,” *IEEE Transactions on Energy Conversion*, vol. 5, no. 3, pp. 572–584, Sept. 1990.

[B12] U.S. Nuclear Regulatory Commission Letter to All Licensees of Nuclear Power Plants, Generic Letter 89-10, June 28, 1989, Subject: Safety Related Motor Operated Valve Testing and Surveillance, and subsequent supplements. Available from the NRC Public Document Room, +1-301-415-7000.

[B13] U.S. Regulatory Guide 1.106, Revision 1, *Thermal Overload Protection for Electric Motors on Motor Operated Valves*, Mar. 1977.

Copyright The Institute of Electrical and Electronics Engineers, Inc.
Provided by IHS under license with IEEE
No reproduction or networking permitted without license from IHS Not for Resale

Annex A

(informative)

Examples of motor torque calculations

A.1 Introduction

This annex contains examples of VAM torque calculation methods. For more information on ac VAMs, refer to 4.3.1; for dc VAMs, refer to 4.3.2.

NOTE—In the examples, the calculated minimum motor torque is greater than the torque requirement, so the preliminary conclusion is that the motor is satisfactory for the application. However, as stated in 4.3.1, there should be reasonable margin between the calculated motor torque and the required torque. The determination of a reasonable margin can only be made on a case-by-case basis dependent on user or application needs. Demonstrated margin is dependent on the degree of conservatism used in the data selection and assumptions used in the calculation.

A.2 AC VAM—calculation method

If the motor has been exposed to an ambient temperature in excess of its rating or has provided several consecutive stroking operations with a resultant temperature rise, the locked rotor torque and current may require adjustment in accordance with the recommendations of the manufacturer before the motor torque can be calculated. To perform this adjustment, the motor temperature has to be known.

For consecutive stroking operations, the motor temperature may be estimated using the motor time-temperature curve from the data sheet of the manufacturer to determine the operation-caused temperature rise of the VAM. For a high-temperature ambient, the actual ambient temperature should be used for the motor temperature. In cases where this is excessively conservative because the motor was only exposed to the environment for a short time, a heat transfer analysis may be performed to determine the motor temperature. This heat transfer analysis would involve specific heat transfer expertise and is outside the scope of this guide. Example 1 is for motors in a high-temperature ambient. Example 2 is for previous stroking operations.

To find the reduction in locked rotor torque and locked rotor current due to elevated temperature, the manufacturer typically provides a percentage torque loss value and a percentage current loss value that are linear over a range of 25 °C to 180 °C. The reduction in locked rotor torque is found by multiplying the proportional amount of temperature above 40 °C by the specified percentage loss value from the manufacturer for the particular motor type. The proportional amount of temperature above 40 °C is simply the motor temperature minus 40 °C divided by the range of 180 to 25. The reduction in locked rotor current is found by multiplying the proportional amount of temperature above 25 °C times the specified percentage loss value from the manufacturer for the particular motor type. The proportional amount of temperature above 25 °C is simply the motor temperature minus 25 °C divided by the range of 180 to 25. The temperature-corrected locked rotor torques and currents are then found as follows:

$$\text{Temperature-Corrected Locked Rotor Torque} = \text{Locked Rotor Torque} \times \frac{1 - (\text{Motor Temperature} - 40)}{180 - 25} \times \frac{\%\ \text{Torque Loss}}{100}$$

Copyright The Institute of Electrical and Electronics Engineers, Inc.
Provided by IHS under license with IEEE
No reproduction or networking permitted without license from IHS
Not for Resale

$$\text{Temperature-Corrected Locked Rotor Current} = \text{Locked Rotor Current} \times \frac{1 - (\text{Motor Temperature} - 25)}{180 - 25} \times \frac{\%\ \text{Current Loss}}{100}$$

The cable impedance is found by multiplying the cable unit resistance and reactance by the feeder length. The motor-locked rotor impedance per phase is found by dividing the rated line-to-neutral voltage by the rated locked rotor current at rated locked rotor power factor.

The method for calculating motor impedance is considered to be a reasonable approximation and satisfactory for the purpose of finding motor terminal voltage. If the user so desires, an exact calculation to find motor impedance may be performed by using an iterative method to correct the locked rotor amperes for the calculated terminal voltage and recalculating terminal voltage using the new locked rotor ampere value until convergence is reached.

The motor performance curve is usually supplied on the motor data sheet by the vendor for ac motors. The motor performance curve is intended to show the operating characteristics of the motor at full load operating temperature. The motor-locked rotor current is found using the table of current supplied on the motor data sheet that shows the locked rotor amperes. This is the current that is used in Example 1.

The minimum motor terminal voltage is found by evaluating a voltage divider network. The minimum MCC voltage is multiplied by the motor impedance and divided by the sum of the motor impedance, cable impedance, and thermal overload resistance to find the minimum motor terminal voltage.

The motor impedance per phase is found by dividing the motor-rated line-to-neutral voltage by the rated locked rotor current (LRA) from the data sheet. This value is then multiplied by the locked rotor power factor (LRPF) to find the motor resistance, and then by the sine of the locked rotor power factor angle to find the motor reactance, as follows:

$$\text{Motor Resistance (During Starting) (Per Phase)} = \frac{\text{Rated Voltage}}{\text{LRA} \times \sqrt{3}} \times \text{LRPF}$$

$$\text{Motor Reactance (During Starting) (Per Phase)} = \frac{\text{Rated Voltage}}{\text{LRA} \times \sqrt{3}} \times \sin(\cos^{-1}\text{pf})$$

Similarly, the maximum motor terminal voltage is found by multiplying the maximum MCC voltage by the motor impedance, and dividing by the sum of the motor impedance, cable impedance, and thermal overload resistance.

The motor impedance (Z_M) is divided by the sum of the motor impedance, cable impedance (Z_c), and thermal overload resistance (R_{oh}) to find the ratio of the voltage, which is applied across the motor terminals. This ratio is multiplied by the value of voltage at the source (MCC) to find the motor terminal voltage (V_t). The temperature-corrected values of cable and thermal overload resistance should be used to account for expected ambient temperatures when calculating minimum motor terminal voltage [the temperature correction factor used in the examples (234.5) is the correction factor for copper conductors]:

$$\text{Cable Resistance Corrected} = \frac{\text{Cable Resistance} \times (234.5 + \text{Cable Temperature})}{234.5 + \text{Reference Resistance Temperature}}$$

$$V_{t\,min} = \frac{Z_M}{Z_M + Z_{c(cor)} + R_{oh(cor)}} \times V_{MCC\,min}$$

Copyright The Institute of Electrical and Electronics Engineers, Inc.
Provided by IHS under license with IEEE
No reproduction or networking permitted without license from IHS Not for Resale

The minimum motor torque is found by multiplying the rated start torque by the square of the ratio of the minimum terminal voltage to the rated terminal voltage. Some authors use the voltage ratio to the 2.2 power [B1].

$$\text{Minimum Torque} = \left(\frac{V_{\text{t min}}}{V_{\text{rated}}}\right)^2 \times \text{Rated Start Torque}$$

This minimum torque is then multiplied by a temperature correction factor that is supplied by the manufacturer. The maximum torque is found by multiplying the rated locked rotor torque by the square of the ratio of the maximum terminal voltage to rated voltage.

The minimum torque should exceed the minimum required torque by a reasonable margin, and the maximum torque should be less than the maximum allowable torque by a reasonable margin.

This calculation method is a suggested method and is not meant to preclude other methods of calculating motor torque output. In the case where the user has actual motor test data, greater accuracy may be obtained by using these measured values in a calculation. Where the output torque of the motor is assumed to be greater than the rated starting torque of the motor, each of the parameters (such as power factor, locked rotor current, and locked rotor torque) in the equation to estimate the output of the VAM have to be determined by testing the specific VAM being evaluated.

Table A.1—Summary of ac motor torque calculations

Example number	Description
1	High temperature ambient. High resistance thermal overload.
2	Temperature rise due to previous valve stroking/test data available.
3	Maximum motor torque.

Examples of ac motor torque calculations are shown in Examples 1 through 3. Note that in the computed results shown in the sample calculations, three decimals are shown and the numbers are rounded, but full precision was maintained internal to the calculation.

A.3 DC VAM torque calculations

A.3.1 Calculation method

First, the total circuit resistance is calculated by multiplying the cable resistance of the motor feeder by four (this assumes all cables are the same size and length). The total circuit resistance is four times the resistance of the length of the motor run because the series winding and armature winding are both cabled back to the starter to allow for reversal. Next the motor resistance is found by dividing the motor rated voltage by the current at the rated locked rotor torque.

The speed torque curve is usually supplied on the motor data sheet of the vendor for DC motors. The speed torque curve is intended to show the motor current for the full range of motor speed, from zero to rated. In

Copyright The Institute of Electrical and Electronics Engineers, Inc.
Provided by IHS under license with IEEE
No reproduction or networking permitted without license from IHS Not for Resale

Example 4, the current found on the curve at the rated start torque condition is used as the motor locked rotor amperes. In cases where this method is considered to be overly conservative based on actual test data with the motor, it may be appropriate to use the actual test data current value (Example 5).

Next, the cable and motor resistances are corrected for temperature using the standard temperature correction formula. The overload heater resistance (multiplied by two if two heaters are utilized) is corrected using the tolerance and the appropriate temperature coefficient for the heater alloy. The motor minimum current is then calculated using the minimum source voltage divided by the temperature-corrected total circuit resistance.

$$\text{Minimum Current} = \left[\frac{\text{Minimum Voltage}}{R_{c1} + R_{m1} + R_{oh1}}\right]$$

where

R_{c1} is the cable resistance (temperature corrected, typically length times 4)
R_{m1} is the motor resistance (temperature corrected)
R_{oh1} is the overload heater resistance (tolerance and temperature corrected if needed)

NOTE—Minimum source voltage is derived by the battery discharge profile, considering proper voltage drop for the time that the MOV is called on to perform its design function.

This current yields the minimum torque from the motor curve. This minimum torque is then compared with the actuator required torque. The minimum torque should be greater then the minimum required by a reasonable margin.

The maximum current is then calculated by dividing the maximum source voltage by the total circuit resistance without temperature correction. The maximum motor inrush current can be calculated as follows:

$$\text{Maximum Current} = \left[\frac{\text{Maximum Voltage}}{R_c + R_m + R_{oh}}\right]$$

where

R_c is the cable resistance (temperature corrected to minimum operating temperature)
R_m is the motor resistance (temperature corrected to minimum operating temperature)
R_{oh} is the overload heater resistance

The maximum torque is obtained from the torque current curve using this current. The maximum torque is then compared with the maximum allowable actuator torque.

Table A.2—Summary of dc motor torque calculations

Example number	Description
4	Current at rated start torque.
5	Locked rotor current test data available.

Examples of dc motor torque calculations are shown in Examples 4 and 5.

Copyright The Institute of Electrical and Electronics Engineers, Inc.
Provided by IHS under license with IEEE
No reproduction or networking permitted without license from IHS Not for Resale

A.4 Examples of ac motor torque calculations

Example 1—Example of ac motor minimum torque calculation

High temperature ambient

2 ft·lbf (2.7 N·m) start motor

MCC minimum voltage:

$V_{MCC} = 447.5\ V_{ac}$

Motor data: (See figures A.1 and A.2 and table A.3)

Rated motor voltage	$V_t = 460$
Locked rotor current (in A)	LRA = 3.3
Rated start torque (in ft·lbf)	LRT = 2.0 (2.7 N·m)
Locked rotor power factor	PF = 0.814
Percent current loss from 25 °C to 180 °C	CL = 27.8
Percent torque loss from 25 °C to 180 °C	TL = 20.7
No previous valve stroke, temperature rise is zero	TempRise = 0

Cable data:

Type	3/c #12 AWG
Cable length (in ft)	L = 257 (78.3 m)
Cable resistance (in Ω/100 ft at 75 °C)	R_c = 0.1972 (0.6470 Ω/100 m)
Cable reactance (in Ω/100 ft at 75 °C)	X_c = 0.0071 (0.0233 Ω/100 m)

VAM data:

Minimum required torque (in ft·lbf)	TorqReq = 1.0 (1.4 N·m)

Overload heater data:

Resistance at 25 °C (in Ω)	HeaterRes = 27.2

Ambient temperature (in °C):

Motor ambient temperature	MotAmb = 102
Cable ambient temperature	CabTemp = 102
MCC ambient temperature	MCCTemp = 25

Calculated values:

Cable resistance

$$\text{CabRes} = \frac{\text{Length}}{100} \times R_c = \frac{257}{100} \times 0.1972 = 0.507\ \Omega$$

Copyright The Institute of Electrical and Electronics Engineers, Inc.
Provided by IHS under license with IEEE
No reproduction or networking permitted without license from IHS
Not for Resale

Cable reactance

$$\text{CabRea} = \frac{\text{Length}}{100} \times X_c = \frac{257}{100} \times 0.0071 = 0.018\ \Omega$$

Motor temperature

$$\text{MotTemp} = \text{MotAmb} + \text{TempRise} = 102 + 0 = 102\ ^\circ\text{C}$$

Temperature-corrected cable resistance

$$\text{CabRes}_{\text{Cor}} = \text{CabRes} \times \frac{234.5 + \text{CabTemp}}{234.5 + 75} = 0.507 \times \frac{234.5 + 102}{234.5 + 75} = 0.551\ \Omega$$

Temperature-corrected locked rotor current

$$\text{LRA}_{\text{Cor}} = \text{LRA} \times \left(1 - \left(\frac{\text{MotTemp} - 25}{155} \times \frac{\text{CL}}{100}\right)\right) = 3.3 \times \left(1 - \left(\frac{102 - 25}{155} \times \frac{27.8}{100}\right)\right) = 2.844\ \text{A}$$

Motor resistance (per phase during starting)

$$R_m = \frac{V_t \times \text{PF}}{1.732 \times \text{LRA}_{\text{Cor}}} = \frac{460 \times 0.814}{1.732 \times 2.844} = 76.009\ \Omega$$

Motor reactance (per phase during starting)

$$X_m = \frac{V_t \times \sin(\text{acos}(\text{PF}))}{1.732 \times \text{LRA}_{\text{Cor}}} = \frac{460 \times \sin(\text{acos}(0.814))}{1.732 \times 2.844} = 54.24\ \Omega$$

Minimum motor terminal voltage

$$V_{t\,\min} = V_{\text{MCC}} \times \frac{(R_m^2 + X_m^2)^{\frac{1}{2}}}{((R_m + \text{HeaterRes} + \text{CabRes}_{\text{Cor}})^2 + (X_m + \text{CabRea})^2)^{\frac{1}{2}}} =$$

$$447.5 \times \frac{((76.009)^2 + (54.24)^2)^{\frac{1}{2}}}{((76.009 + 27.2 + 0.551)^2 + (54.24 + 0.018)^2)^{\frac{1}{2}}} = 356.873\ V_{ac}$$

Temperature-corrected rated start torque

$$\text{LRT}_{\text{Cor}} = \text{LRT}\left(1 - \left(\frac{\text{MotTemp} - 40}{155}\right) \times \left(\frac{\text{TL}}{100}\right)\right) = 2.0\left(1 - \left(\frac{102 - 40}{155}\right) \times \left(\frac{20.7}{100}\right)\right) =$$

1.834 ft·lbf (2.5 N·m)

Copyright The Institute of Electrical and Electronics Engineers, Inc.
Provided by IHS under license with IEEE
No reproduction or networking permitted without license from IHS Not for Resale

Calculated minimum motor torque

$$\text{MinTorq} = \left(\frac{V_{\text{t min}}}{V_{\text{t}}}\right)^2 \times \text{LRT}_{\text{Cor}} = \left(\frac{356.873}{460}\right)^2 \times 1.834 = 1.104$$

Torque assessment:

TorqReq = 1 ft·lbf (1.4 N·m), MinTorq/TorqReq = 1.104

The minimum torque is greater than the torque requirement, by a satisfactory margin, so the motor torque is acceptable for this application.

Table A.3—Current/Torque changes from 25 °C to 180 °C

Start—r/min	Curve number	Current loss (%)	Torque loss (%)
2' #—1800	M2735A	27.8	20.7
300' #—1800	SK-34183	11.7	5.8

NOTE—A similar table is not required for dc motors, as their characteristic change with temperature is determined by ascertaining the motor winding copper resistance change with temperature.

--`,,-`-`,,`,,`,`,,`---
Copyright The Institute of Electrical and Electronics Engineers, Inc.
Provided by IHS under license with IEEE
No reproduction or networking permitted without license from IHS
Not for Resale

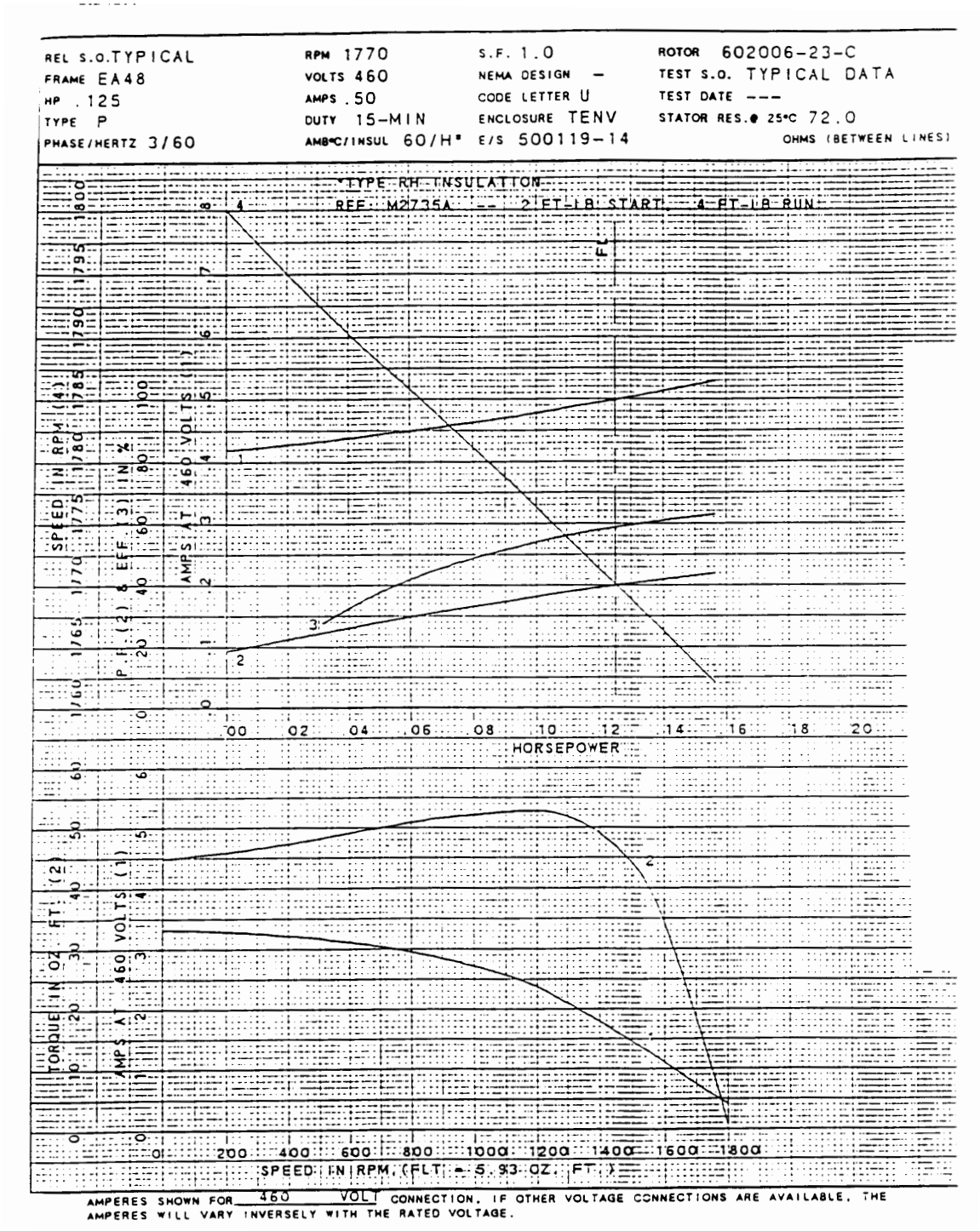

Figure A.1—AC motor performance curves (0.125 hp/95 W)

Copyright The Institute of Electrical and Electronics Engineers, Inc.
Provided by IHS under license with IEEE
No reproduction or networking permitted without license from IHS
Not for Resale

REL. S.O.	FRAME	HP	TYPE	PHASE/ HERTZ	RPM	VOLTS
TYPICAL	EA48	.125	P	3/60	1770	460

AMPS	DUTY	AMB°C/ INSUL.	S.F.	NEMA DESIGN	CODE LETTER	ENCL.
.50	15-MIN	60/H*	1.0	-	U	TENV

E/S	ROTOR	TEST S.O.	TEST DATE	STATOR RES.@25°C OHMS (BETWEEN LINES)
500119-14	602006-23-C	---	---	72.0

PERFORMANCE

LOAD	HP	AMPERES	RPM	% POWER FACTOR	% EFFICIENCY
NO LOAD	0	.42	1800	18.7	0
1/4	.031	.43	1792	24.5	27.6
2/4	.063	.45	1785	30.2	42.9
3/4	.094	.47	1778	35.4	52.5
4/4	.12	.50	1770	40.0	58.8
5/4	.16	.53	1762	43.9	62.9

SPEED TORQUE

	% POWER FACTOR	RPM	TORQUE % FULL LOAD	TORQUE OZ.-FT.	AMPERES
LOCKED ROTOR	81.4	0	756	44.8	3.3
PULL UP	81.4	0	756	44.8	3.3
BREAKDOWN	88.5	1200	889	52.7	2.4
FULL LOAD	40.0	1770	100	5.93	.50

AMPERES SHOWN FOR 460. VOLT CONNECTION. IF OTHER VOLTAGE CONNECTIONS ARE AVAILABLE, THE AMPERES WILL VARY INVERSELY WITH THE RATED VOLTAGE

REMARKS: TYPICAL DATA
*TYPE RH INSULATION
REF: M2735A -- 2 FT-LB START, .4 FT-LB RUN

Figure A.2—AC motor performance data (0.125 hp/95 W)

Copyright The Institute of Electrical and Electronics Engineers, Inc.
Provided by IHS under license with IEEE
No reproduction or networking permitted without license from IHS
Not for Resale

Example 2—Example of ac motor minimum torque calculation, 300 ft·lbf (407 N·m) start motor test data on the motor is available

MCC minimum voltage:

$V_{MCC} = 411\ V_{ac}$

Motor data: (See table A.3 and use available test data)

Rated motor voltage from test (in V)	$V_t = 460$
Locked rotor current from test (in A)	LRA = 187
Locked rotor torque from test (in ft·lbf)	LRT = 310 (420 N·m)
Locked rotor power factor from test	PF = 0.617
Percent current loss from 25 °C to 180 °C	CL = 11.7
Percent torque loss from 25 °C to 180 °C	TL = 5.8

Previous valve stroking:

Five consecutive open-close cycles have been made. Each open-close cycle requires 2 min. The total time is 10 min (600 s).

From figure A.3, the temperature rise is 20 °C.	TempRise = 20 °C

Cable data:

Type	3/c #6
Cable length (in ft)	Length = 162 (19.4 m)
Cable resistance (in Ω/100 ft at 75 °C)	$R_c = 0.0498$ (0.1634 Ω/100m)
Cable reactance (in Ω/100 ft at 75 °C)	$X_c = 0.00598$ (0.0196 Ω/100m)

VAM data:

Minimum required torque (in ft·lbf)	TorqReq = 200 (271 N·m)

Overload heater data:

Resistance at 25 °C	HeaterRes = 0.000849

Ambient temperature (in °C):

Motor ambient temperature	MotAmb = 25
Cable ambient temperature	CabTemp = 60
MCC ambient temperature	MCCTemp = 25

Calculated values:

Cable resistance

$$\text{CabRes} = \frac{\text{Length}}{100} \times R_c = \frac{162}{100} \times 0.0498 = 0.08\ \Omega$$

Copyright The Institute of Electrical and Electronics Engineers, Inc.
Provided by IHS under license with IEEE
No reproduction or networking permitted without license from IHS Not for Resale

Cable reactance

$$\text{CabRea} = \frac{\text{Length}}{100} \times X_c = \frac{162}{100} \times 0.00598 = 0.01\ \Omega$$

Motor temperature

$$\text{MotTemp} = \text{MotAmb} + \text{TempRise} = 25 + 20 = 45\ ^\circ\text{C}$$

Temperature-corrected cable resistance

$$\text{CabRes}_{\text{Cor}} = \text{CabRes} \times \frac{234.5 + \text{CabTemp}}{234.5 + 75} = 0.08 \times \frac{234.5 + 60}{234.5 + 75} = 0.077\ \Omega$$

Temperature-corrected locked rotor current

$$\text{LRA}_{\text{Cor}} = \text{LRA} \times \left(1 - \left(\frac{\text{MotTemp} - 25}{155}\right) \times \frac{\text{CL}}{100}\right) = 187 \times \left(1 - \left(\frac{45 - 25}{155}\right) \times \frac{11.7}{100}\right) = 184.177\ \text{A}$$

Motor resistance (per phase during starting)

$$R_m = \frac{V_t \times \text{PF}}{1.732 \times \text{LRA}_{\text{Cor}}} = \frac{460 \times 0.617}{1.732 \times 184.177} = 0.89\ \Omega$$

Motor reactance (per phase during starting)

$$X_m = V_t \times \frac{\sin(\text{acos}(\text{PF}))}{1.732 \times \text{LRA}_{\text{Cor}}} = 460 \times \frac{\sin(\text{acos}\ 0.617)}{1.732 \times 184.177} = 1.135\ \Omega$$

Minimum motor terminal voltage

$$V_{t\,\min} = V_{\text{MCC}} \times \frac{(R_m^2 + X_m^2)^{\frac{1}{2}}}{((R_m + \text{HeaterRes} + \text{CabRes}_{\text{Cor}})^2 + (X_m + \text{CabRea})^2)^{\frac{1}{2}}} =$$

$$411 \times \frac{((0.89)^2 + (1.135)^2)^{\frac{1}{2}}}{((0.89 + 0.000849 + 0.077)^2 + (1.135 + 0.01)^2)^{\frac{1}{2}}} = 395.497 V_{ac}$$

Temperature-corrected locked rotor torque

$$\text{LRT}_{\text{Cor}} = \text{LRT}\left(1 - \left(\frac{\text{MotTemp} - 40}{155}\right) \times \left(\frac{\text{TL}}{100}\right)\right) =$$

Copyright The Institute of Electrical and Electronics Engineers, Inc.
Provided by IHS under license with IEEE
No reproduction or networking permitted without license from IHS Not for Resale

$$310\left(1-\left(\frac{45-40}{155}\right)\times\left(\frac{5.8}{100}\right)\right) = 309.42 \text{ ft·lbf } (419.57 \text{ N·m})$$

Calculated minimum motor torque

$$\text{MinTorq} = \left(\frac{V_{t\,min}}{V_t}\right)^2 \times \text{LRT}_{Cor} = \left(\frac{395.497}{460}\right)^2 \times 309.42 = 228.728 \text{ ft·lbf } (310.155 \text{ N·m})$$

Torque assessment

TorqReq = 200 ft·lbf (271 N·m), MinTorq/TorqReg = 1.144

The minimum torque is greater than the torque requirement, by a satisfactory margin, so the motor torque is acceptable for this application.

Copyright The Institute of Electrical and Electronics Engineers, Inc.
Provided by IHS under license with IEEE
No reproduction or networking permitted without license from IHS Not for Resale

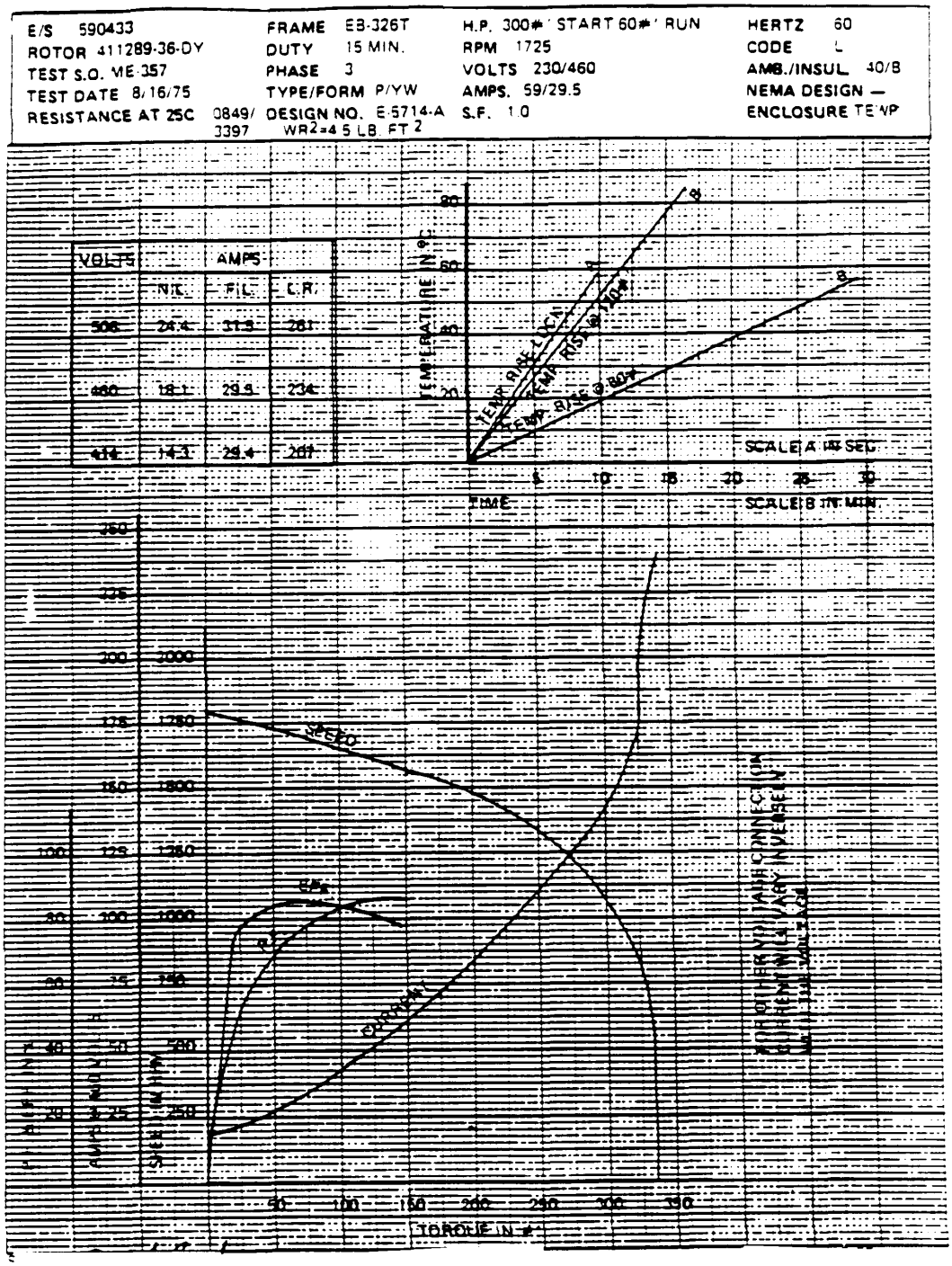

Figure A.3—AC motor performance curves [old] (19.8 hp/14.8 kW)

Copyright The Institute of Electrical and Electronics Engineers, Inc.
Provided by IHS under license with IEEE
No reproduction or networking permitted without license from IHS
Not for Resale

Example 3—Example of ac motor maximum torque calculation

Maximum motor torque, 300 ft·lbf (407 N·m) start motor (maximum torque from data is 342 ft·lbf/464 N·m)

MCC maximum voltage:

$V_{MCC} = 502\ V_{ac}$

Motor data: (see figures A.4 and A.5)

Rated motor voltage (in V)	$V_t = 460$
Locked rotor current (in A)	LRA = 234
Locked rotor torque (in ft·lbf)	LRT = 342 (464 N·m)
Locked rotor power factor	PF = 0.617

Previous valve stroking:

None, no motor temperature rise	TempRise = 0

Cable data:

Type	3/c #6
Cable length (in ft)	Length = 288
Cable resistance (in Ω/100 ft at 75 °C)	$R_c = 0.0498$ (0.1634 N·m)
Cable reactance (in Ω/100 ft at 75 °C)	$X_c = 0.00598$ (0.0196 N·m)

VAM data:

Maximum allowable torque (in ft·lbf)	TorqAll = 600 (814 N·m)

Overload heater data:

Resistance at 25 °C	HeaterRes = 0.000849

Ambient temperature (in °C):

Motor ambient temperature	MotAmb = 25
Cable ambient temperature	CabTemp = 25
MCC ambient temperature	MCCTemp = 25

Calculated values:

Cable resistance

$$\text{CabRes} = \frac{\text{Length}}{100} \times R_c = \frac{288}{100} \times 0.0498 = 0.143\ \Omega$$

Cable reactance

$$\text{CabRea} = \frac{\text{Length}}{100} \times X_c = \frac{288}{100} \times 0.00598 = 0.017\ \Omega$$

Copyright The Institute of Electrical and Electronics Engineers, Inc.
Provided by IHS under license with IEEE
No reproduction or networking permitted without license from IHS Not for Resale

Motor temperature

$$\text{MotTemp} = \text{MotAmb} + \text{TempRise} = 25 + 0 = 25\ ^\circ\text{C}$$

Temperature-corrected cable resistance

$$\text{CabRes}_{\text{Cor}} = \text{CabRes} \times \frac{234.5 + \text{CabTemp}}{234.5 + 75} = 0.143 \times \frac{234.5 + 25}{234.5 + 75} = 0.12\ \Omega$$

Motor resistance (per phase during starting)

$$R_{\text{m}} = \frac{V_{\text{t}} \times \text{PF}}{1.732 \times \text{LRA}} = \frac{460 \times 0.617}{1.732 \times 234} = 0.700\ \Omega$$

Motor reactance (per phase during starting)

$$X_{\text{m}} = V_{\text{t}} \times \frac{\sin(\text{acos}(\text{PF}))}{1.732 \times \text{LRA}} = 460 \times \frac{\sin(\text{acos}(0.617))}{1.732 \times 234} = 0.893\ \Omega$$

Maximum motor terminal voltage

$$V_{\text{t max}} = V_{\text{MCC}} \times \frac{(R_{\text{m}}^2 + X_{\text{m}}^2)^{\frac{1}{2}}}{((R_{\text{m}} + \text{HeaterRes} + \text{CabRes}_{\text{Cor}})^2 + (X_{\text{m}} + \text{CabRea})^2)^{\frac{1}{2}}} =$$

$$502 \times \frac{((0.700)^2 + (0.893)^2)^{\frac{1}{2}}}{((0.700 + 0.000849 + 0.12)^2 + (0.893 + 0.017)^2)^{\frac{1}{2}}} = 464.663\ V_{\text{ac}}$$

Calculated maximum motor torque

$$\text{MaxTorq} = \left(\frac{V_{\text{t max}}}{V_{\text{t}}}\right)^2 \times \text{LRT} = \left(\frac{464.663}{460}\right)^2 \times 342 = 348.968\ \text{ft·lbf}\ (473.201\ \text{N·m})$$

Torque assessment:

TorqAll = 600 ft·lbf (814 N·m)

The calculated maximum torque is less than the allowable torque requirement, so the motor is satisfactory for this application.

--`,,-`-`,,`,,`,`,,`---

Copyright The Institute of Electrical and Electronics Engineers, Inc.
Provided by IHS under license with IEEE
No reproduction or networking permitted without license from IHS
Not for Resale

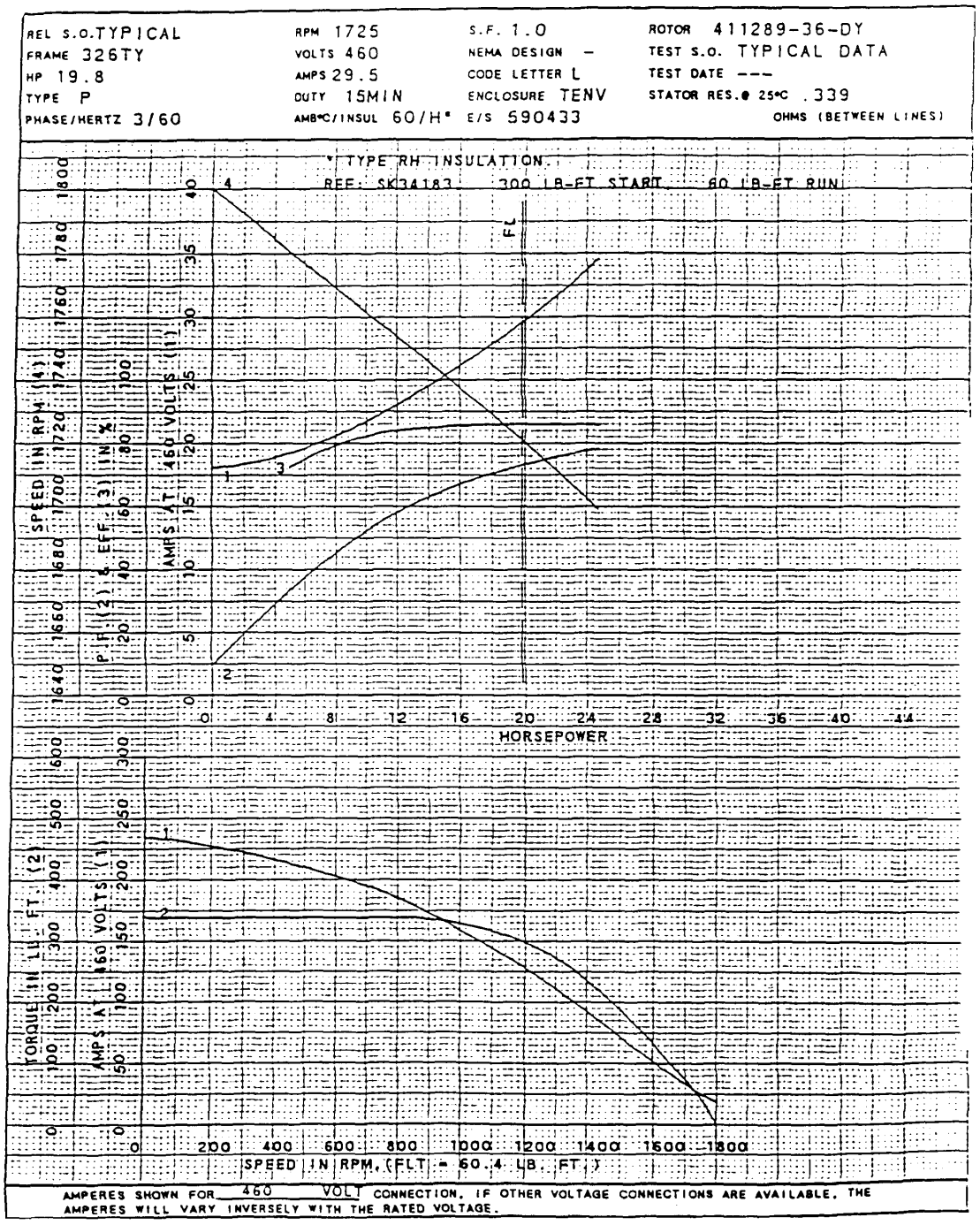

Figure A.4—AC motor performance curves [new] (19.8 hp/14.8 kW)

Copyright The Institute of Electrical and Electronics Engineers, Inc.
Provided by IHS under license with IEEE
No reproduction or networking permitted without license from IHS Not for Resale

REL. S.O.	FRAME	HP	TYPE	PHASE/ HERTZ	RPM	VOLTS
TYPICAL	326TY	19.8	P	3/60	1725	460

AMPS	DUTY	AMB°C/ INSUL.	S.F.	NEMA DESIGN	CODE LETTER	ENCL.
29.5	15MIN	60/H*	1.0	-	L	TENV

E/S	ROTOR	TEST S.O.	TEST DATE	STATOR RES.@25°C OHMS (BETWEEN LINES)
590433	411289-36-DY	---	---	.339

PERFORMANCE

LOAD	HP	AMPERES	RPM	% POWER FACTOR	% EFFICIENCY
NO LOAD	0	18.1	1800	9.39	0
1/4	4.95	19.2	1781	33.3	72.4
2/4	9.90	21.7	1762	51.9	82.2
3/4	14.9	25.2	1742	64.8	85.2
4/4	19.8	29.5	1721	73.1	86.0
5/4	24.7	34.6	1699	78.2	85.7

SPEED TORQUE

	% POWER FACTOR	RPM	TORQUE % FULL LOAD	TORQUE LB.-FT.	AMPERES
LOCKED ROTOR	61.7	0	565	342	234
PULL UP	61.7	18.0	560	338	234
BREAKDOWN	74.2	796	560	338	186
FULL LOAD	68.4	1721	100	60.4	29.5

AMPERES SHOWN FOR 460. VOLT CONNECTION. IF OTHER VOLTAGE CONNECTIONS ARE AVAILABLE, THE AMPERES WILL VARY INVERSELY WITH THE RATED VOLTAGE

REMARKS: TYPICAL DATA
* TYPE RH INSULATION.
REF: SK34183, 300 LB-FT START, 60 LB-FT RUN

Figure A.5—AC motor performance data (19.8 hp/14.8 kW)

Copyright The Institute of Electrical and Electronics Engineers, Inc.
Provided by IHS under license with IEEE
No reproduction or networking permitted without license from IHS
Not for Resale

A.5 Examples of dc motor torque calculations

Example 4—DC motor, rated start torque current

Data:

Cable gauge #12 AWG, R cable = 1.72×10^{-3} Ω/ft (5.64×10^{-3} Ω/m) at 25 °C	
Motor feeder length	270 ft (82 m)
Motor data: (see figure A.6)	
Torque	15 ft·lbf (20 N·m)
Voltage	250 V
Amperes at rated start torque	18.5 A (see figure A.6)
Maximum ambient MCC temperature	t_{2MCC} = 90 °C
Maximum ambient cable temperature	t_{2Cab} = 55 °C
Maximum ambient motor temperature	t_{2Mot} = 55 °C
Rated motor temperature	t_1 = 25 °C
MCC voltage	
Minimum	215 V
Maximum	280.5 V
Overload heater	
Resistance	0.127 Ω at 25 °C
Tolerance	±3%
Temperature coefficient	a = 0.00094
VAM	
Required torque	9 ft·lbf (12 N·m)
Maximum allowable torque	25 ft·lbf (34 N·m)

Minimum torque calculations:

Cable resistance

$$R_c = 4 \times 270 \text{ ft (82 m)} \times 1.72 \times 10^{-3} \text{ Ω/ft } (5.64 \times 10^{-3} \text{ Ω/m}) = 1.858 \text{ Ω}$$

Motor resistance

$$R_m = \frac{250 \text{ V}}{18.5 \text{ A}} = 13.51 \text{ Ω}$$

Cable resistance (temperature corrected)

$$R_{c1} = R_c \times \frac{234.5 + t_{2Cab}}{234.5 + t_1} = 1.858 \text{ Ω} \times \frac{234.5 + 55}{234.5 + 25} = 2.073 \text{ Ω}$$

Motor resistance (temperature corrected)

$$R_{m1} = R_m \times \frac{234.5 + t_{2Mot}}{234.5 + t_1} = 13.51 \text{ Ω} \times \frac{234.5 + 55}{234.5 + 25} = 15.07 \text{ Ω}$$

Overload heater resistance

$R_{oh} = 0.127 \times 1.03 = 0.131$ Ω (multiplied by tolerance)

Copyright The Institute of Electrical and Electronics Engineers, Inc.
Provided by IHS under license with IEEE
No reproduction or networking permitted without license from IHS Not for Resale

$R_{oh1} = R_{oh}[1 + a(t_{2MCC} - t_1)] = 0.131[1 + 0.00094(90 - 25)]$

$R_{oh1} = 0.131 \times 1.06 = 0.139\ \Omega$

$R_{oh2} = 0.127 \times 0.97 = 0.123\ \Omega$ (multiplied by lower tolerance)

Minimum motor current

$$I_{min} = \frac{V_{MCC}}{R_{m1} + R_{c1} + R_{oh1}} = \frac{215\ V}{15.07\ \Omega + 2.073\ \Omega + 0.139\ \Omega} = 12.44\ A$$

Minimum torque [from 15 ft·lbf (20 N·m) motor curve] (see figure A.6) = 10 ft·lbf (14 N·m)

Maximum motor current

$$I_{max} = \frac{V_{MCC}}{R_m + R_c + R_{oh2}} = \frac{280.5\ V}{13.51\ \Omega + 1.858\ \Omega + 0.123\ \Omega} = 18.107\ A$$

Maximum torque [from 15 ft·lbf (20 N·m) motor curve] (see figure A.6) = 16 ft·lbf (22 N·m)

Torque evaluation:

Minimum torque assessment

$$\frac{\text{MinTorq}}{\text{ReqTorq}} = \frac{10\ \text{ft·lbf}\,(14\ \text{N·m})}{9\ \text{ft·lbf}\,(12\ \text{N·m})} = 1.1\text{—acceptable}$$

Maximum torque assessment

16 ft·lbf (22 N·m) < 25 ft·lbf (34 N·m) allowable—acceptable

Copyright The Institute of Electrical and Electronics Engineers, Inc.
Provided by IHS under license with IEEE
No reproduction or networking permitted without license from IHS
Not for Resale

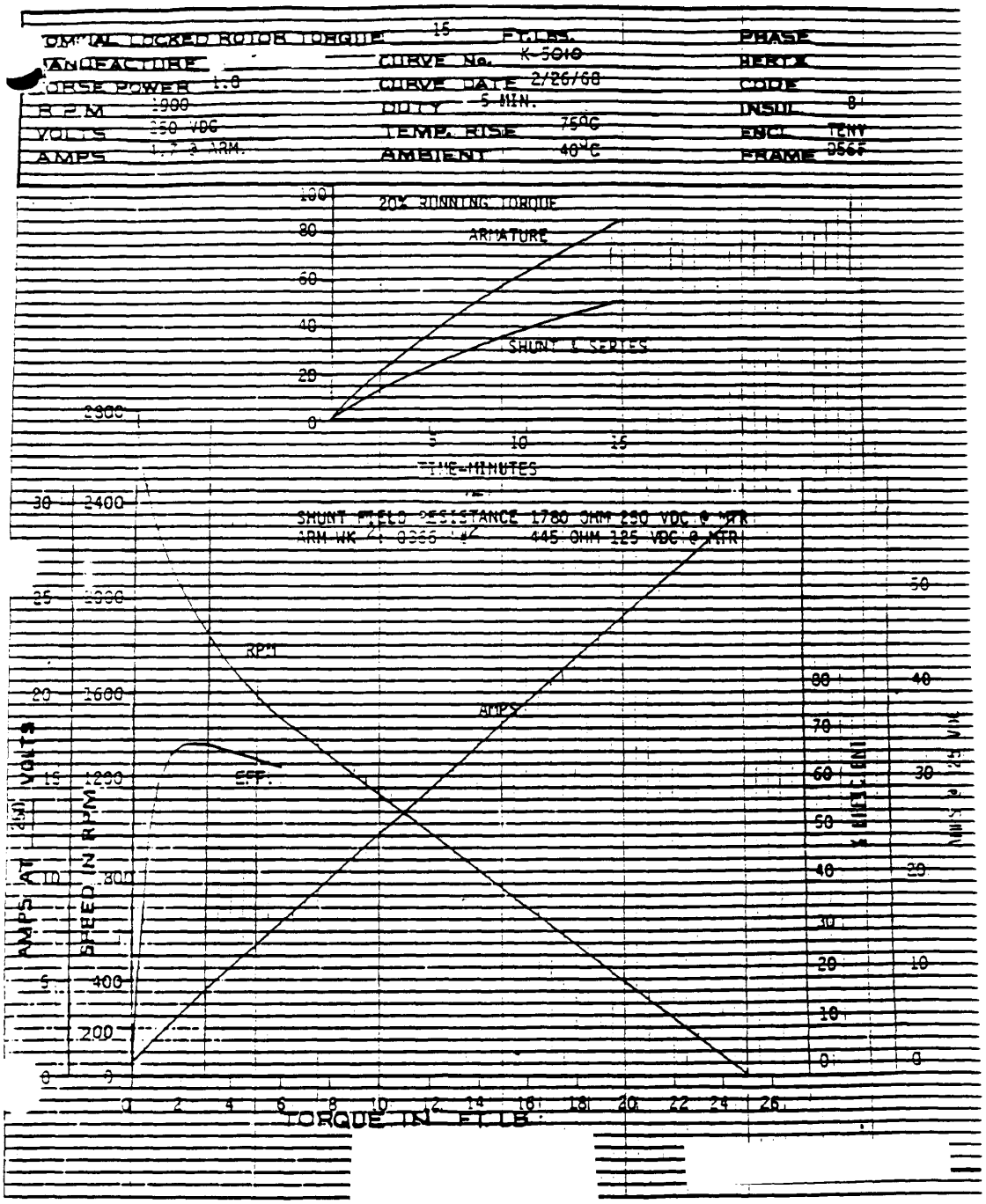

Figure A.6—AC motor performance curves (1.0 hp/1.4 N·m)

Copyright The Institute of Electrical and Electronics Engineers, Inc.
Provided by IHS under license with IEEE
No reproduction or networking permitted without license from IHS Not for Resale

Example 5—DC motor, locked rotor current, test data available

Data

Cable gauge #12 AWG, R cable = 1.72×10^{-3} Ω/ft (5.64×10^{-3} Ω/m) at 25 °C	
Motor feeder length	270 ft (82 m)
Motor data (from test)	
Torque	20 ft·lbf (27 N·m)
Voltage	250 V
Amperes	24 A
Maximum ambient MCC temperature	t_{2MCC} = 90 °C
Maximum ambient cable temperature	t_{2Cab} = 55 °C
Maximum ambient motor temperature	t_{2Mot} = 55 °C
Rated motor temperature	t_1 = 25 °C
MCC voltage	
Minimum	215 V
Maximum	280.5 V
Overload heater	
Resistance	0.127 Ω at 25 °C
Tolerance	±3%
Temperature coefficient	a = 0.00094
VAM	
Required torque	9 ft·lbf (12 N·m)
Maximum allowable torque	25 ft·lbf (34 N·m)

Minimum torque calculations:

Cable resistance

$R_c = 4 \times 270$ ft (82 m) $\times 1.72 \times 10^{-3}$ Ω/ft (5.64×10^{-3} Ω/m) = 1.858 Ω

Motor resistance

$$R_m = \frac{250\ \text{V}}{24\ \text{A}} = 10.42\ \Omega$$

Cable resistance (temperature corrected)

$$R_{c1} = R_c \times \frac{234.5 + t_{2Cab}}{234.5 + t_1} = 1.858\ \Omega \times \frac{234.5 + 55}{234.5 + 25} = 2.073\ \Omega$$

Motor resistance (temperature corrected)

$$R_{m1} = R_m \times \frac{234.5 + t_{2Mot}}{234.5 + t_1} = 10.42\ \Omega \times \frac{234.5 + 55}{234.5 + 25} = 11.62\ \Omega$$

Overload heater resistance

$R_{oh} = 0.127 \times 1.03 = 0.131\ \Omega$ (multiplied by tolerance)

$R_{oh1} = R_{oh}[1 + a(t_{2MCC} - t_1)] = 0.131[1 + 0.00094(90 - 25)]$

Copyright The Institute of Electrical and Electronics Engineers, Inc.
Provided by IHS under license with IEEE
No reproduction or networking permitted without license from IHS
Not for Resale

$R_{oh1} = 0.131 \times 1.06 = 0.139\ \Omega$

$R_{oh2} = 0.127 \times 0.97 = 0.123\ \Omega$ (multiplied by lower tolerance)

Minimum motor current

$$I_{min} = \frac{V_{MCC}}{R_{m1} + R_{c1} + R_{oh1}} = \frac{215\ V}{11.62\ \Omega + 2.073\ \Omega + 0.139\ \Omega} = 15.54\ A$$

Minimum torque [from 15 ft·lbf (20 N·m) motor curve, see figure A.6] = 13 ft·lbf (18 N·m)

Maximum motor current

$$I_{max} = \frac{V_{MCC}}{R_{m} + R_{c} + R_{oh2}} = \frac{280.5\ V}{10.42\ \Omega + 1.858\ \Omega + 0.123\ \Omega} = 22.6\ A$$

Maximum torque [from 15 ft·lbf (20 N·m) motor curve, see figure A.6] 18 ft·lbf (24 N·m)

Torque evaluation:

Minimum torque assessment

$$\frac{\text{MinTorq}}{\text{ReqTorq}} = \frac{13\ \text{ft·lbf}\,(18\ \text{N·m})}{9\ \text{ft·lbf}\,(12\ \text{N·m})} = 1.44\text{—acceptable}$$

Maximum torque assessment

18 ft·lbf (24 N·m) < 25 ft·lbf (34 N·m) rating—acceptable

Copyright The Institute of Electrical and Electronics Engineers, Inc.
Provided by IHS under license with IEEE
No reproduction or networking permitted without license from IHS Not for Resale

Annex B

(informative)

Fuse selection examples

B.1 Specific sizing criteria

The procedure presented in this annex is intended to represent a typical method used to select fuses and is not intended to represent the only method.

The minimum melting time current characteristic curves from the manufacturer should be utilized while performing fuse sizing.

B.1.1 Overload heating protection

The current drawn by the VAM is variable in magnitude, and when the current is averaged over its entire stroke, its magnitude may be greater than the VAM nominal current. It is recommended that the current at twice nominal torque be used in the selection of the fuse to preclude melting during the stroke.

Plot a point on the fuse curve graph that represents current at twice nominal torque for the operating stroke time of the VAM.

B.1.2 Starting current sizing point

To assure that the VAM can start to perform its design function, a conservative sizing point is established to account for inrush current. Typically, a point should be plotted that is 150% of locked rotor amperes for 0.25 s. A greater time could be utilized if shown by diagnostic test.

B.1.3 Locked rotor sizing protection

A point should be plotted that allows locked rotor current for a time span of a minimum of 5 s to the maximum of the temperature rise capabilities of the VAM, nominally 10 s. (The 10 s time span comes from the typical 15 s maximum insulation withstand time.) The 10 s time span is chosen to allow for variations in bus voltage.

B.1.4 Select dual-element fuse curve

Select a fuse curve that best fits locked rotor protection, allows for motor starting, and possibly provides overload protection. The three plotted points have to be on the curve or positioned to the left. In general, the most important determining factor is the locked rotor protection point, which is 10 s compared to motor capability of 15 s for this example.

B.1.5 Plot a point for single phasing

A single phasing point can be plotted by multiplying 1.73 times the full-load amperes (FLA) and determining if it falls on the curve of the selected fuse. Single phasing current may increase to two times due to

Copyright The Institute of Electrical and Electronics Engineers, Inc.
Provided by IHS under license with IEEE
No reproduction or networking permitted without license from IHS
Not for Resale

change in efficiency. There may be a condition for a continuously reversing operator where protection for single phasing is not provided.

If single phasing occurs and an instantaneous reversal or reversal at the end of stroke occurs, the motor may not reverse rotation. Single-phasing protection is not available for this condition.

B.1.6 Conductor protection

Since VAM duty is intermittent, only two conditions need be satisfied for VAM conductor protection. The fuse shall protect for short-circuit withstand (I^2t) capability for cable insulation and assure that the locked rotor current does not compromise the cable insulation. This term is the measure of heat energy developed within a circuit during fuse clearing. It can be expressed as "melting I^2t," "arcing I^2t," or the sum of them as "clearing I^2t." "I" stands for effective let-through current [root-mean-square (rms)], which is squared, and "t" stands for the time of opening, in seconds. The I^2t curve for the type of conductor insulation utilized according to ICEA P32-382 should be plotted with the fuse total time-current characteristic curve. The insulation withstand curve should be positioned to the right of the fuse curve and the locked rotor melt point to assure proper protection.

B.2 Typical example of fuse selection for ac valve actuator

B.2.1 Data

Motor to be protected: 10 ft·lbf (14 N·m) (starting torque), 3400 r/min, 3-phase, 60 Hz, 230/460 V, 1.3 hp (970 W), [Nominal torque 2 ft·lbf (3 N·m)], 15 min duty, class B, totally enclosed, nonventilated valve actuator motor.

Nominal torque:	2.0 ft·lbf (3 N·m)
Nameplate or nominal current:	2.4 A
Current at twice nominal torque:	3.3 A
Locked rotor current (at 460 V):	16.0 A
Acceleration time:	1 s
Valve stroke time:	180 s
Motor performance curves:	Figure 4
Duty cycle:	2 strokes
Duty cycle time of valve actuator:	360 s
Maximum ambient temperature:	104 °F (40 °C)
Terminal voltage variation:	±10%

Determine the time-temperature limits of the motor from the motor performance curve given in figure 4. The motor capability can be established based on the time at which the motor would reach a temperature of 85 °C at each specified load as follows:

Nominal torque:	> 2100 s capability
Twice nominal torque:	540 s capability
Locked rotor:	15 s capability

B.2.2 Calculation

Step 1—Plot a point for overload protection.

Current at twice nominal torque for the stroke time is 3.3 A for 180 s.

Copyright The Institute of Electrical and Electronics Engineers, Inc.
Provided by IHS under license with IEEE
No reproduction or networking permitted without license from IHS Not for Resale

Step 2—Plot a point for the starting ampere requirement.

150% × Locked Rotor Current [16 A = 24 A for 0.25 s]

Step 3—Plot a point for locked rotor protection.

16 A at nominally 10–15 s.

Step 4—Select a dual-element fuse curve.

For this example, a 2.25 A fuse would best fit these conditions. A melt time on 500 s for an overload condition as compared with the motor capability of 540 s protects the valve for two valve strokes. This fuse curve places the plotted points to the left of the curve, allowing this fuse to provide protection for the previous evaluated points. In general, the most important determining factor is the locked rotor protection point. This point is 10 s compared to the motor capability of 15 s for this example.

Step 5—Plot a point for a single phasing.

1.73 × 2.4 A = 4.15 A

The 2.25 A fuse would melt in approximately 80 s, primarily due to this valve having a long stroke time.

Step 6—Plot a curve for I^2t for size and type wire.

The curve from the ICEA P32-382 for the selected #14 EPR-XLPE wire is plotted on figure B.1. The line is to the right of the fuse curve showing that the fuse would clear prior to cable damage.

Step 7—Review for effects of temperature and voltage.

a) *Temperature*
For this example, the environmental profile would show the marginally greater ambient temperature of 104 °F, reduce the carrying capacity by 5%, and affect the melting time by approximately 90%. Looking at the locked rotor, the effect of having the greater temperature would result an acceptable 9 s, versus 10 s, melting time.
Looking at overload protection, the 500 s melt time point would be reduced to (500) (0.90) = 450 s, which is still within the acceptable two consecutive valve stroke time.

b) *Voltage*
As stated in 5.2.1.1.3, a low terminal voltage of 414 Vac or 90% of rated 460 Vac would result in change of the locked rotor current of 16 A to decrease to (30/32) = (0.94)(16) = 15 A. The degraded voltage can be determined by the time on the load flow study that the valve is required to have to perform its function. The corresponding lower melting point of 11 s has no adverse effects.
If VAM terminal voltage is 506 Vac or 110% of rated 460 Vac, the overload protection current will increase by 2.5/2.4 = 1.04 or (3.3)(1.04) = 3.4 A. This corresponds to an acceptable approximately 150 s melting time.
The worst-case scenario of high voltage and high temperature would result in an acceptable 5.4 s melt time.
(0.9 high temperature factor)(6 s locked rotor time at high voltage) = 5.4 s

B.2.3 Conclusions

The use of a 2.25 A dual-element fuse provides for the correct balance between protecting the VAM and allowing the MOV to perform its design function. This fuse sizing provides for the following:

Copyright The Institute of Electrical and Electronics Engineers, Inc.
Provided by IHS under license with IEEE
No reproduction or networking permitted without license from IHS
Not for Resale

— Two strokes are permitted under overload conditions.
— The VAM is permitted to start and to perform its function.
— The VAM will provide up to and including locked rotor torque to allow the MOV to perform its design function. The fuse will protect the motor so that it may have additional operations.
— The fuse protects the wire for fault conditions.
— The effects of both temperature and voltage have no adverse impact on fuse or VAM performance.

Copyright The Institute of Electrical and Electronics Engineers, Inc.
Provided by IHS under license with IEEE
No reproduction or networking permitted without license from IHS Not for Resale

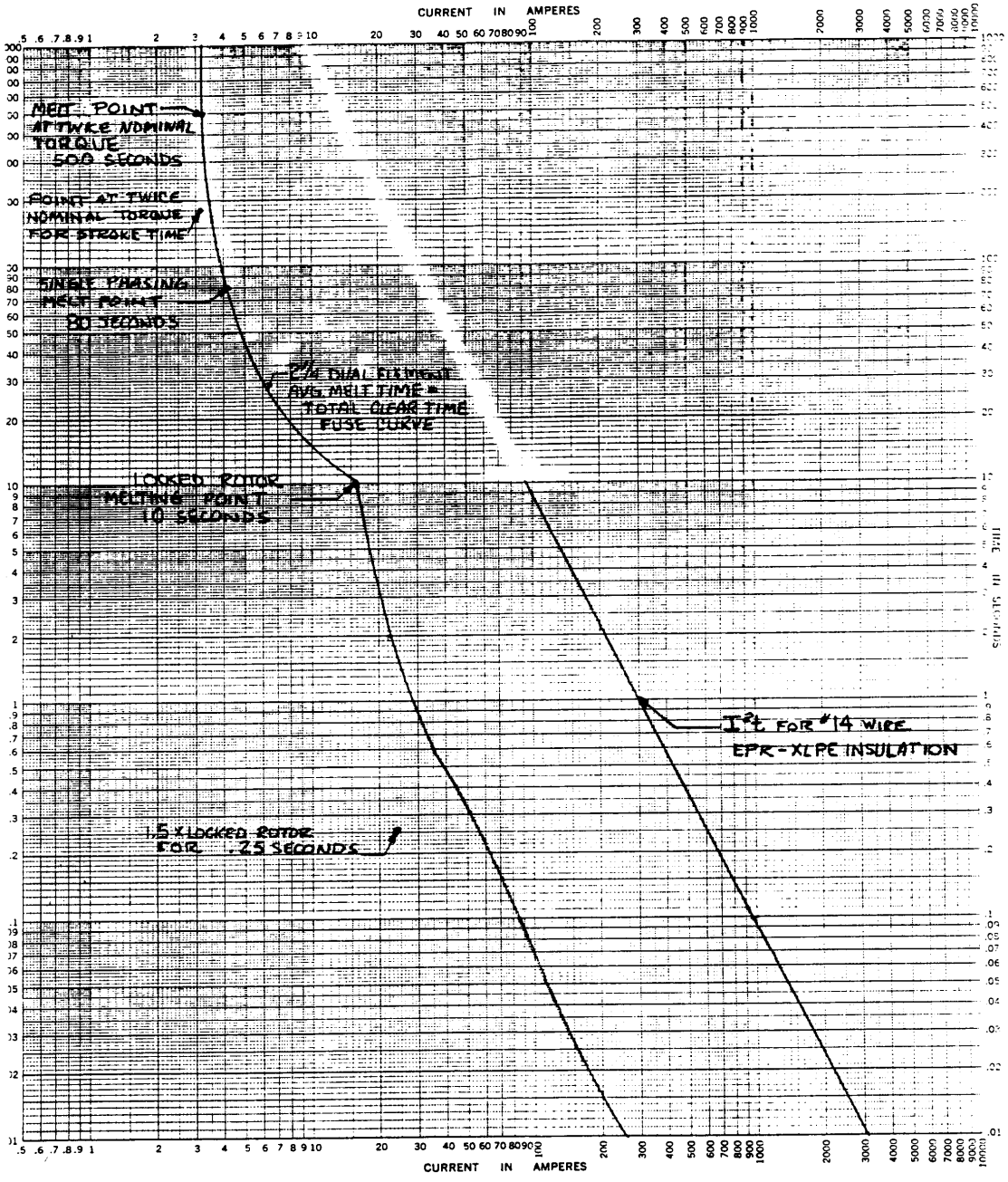

Figure B.1—Cable and fuse protection

Copyright The Institute of Electrical and Electronics Engineers, Inc.
Provided by IHS under license with IEEE
No reproduction or networking permitted without license from IHS
Not for Resale

Annex C

(informative)

Control system selection example

C.1 Background

This annex presents an example design of an MOV control circuit. The MOV system requirements for this application are delineated in figure C.1. The completed design is shown in figure C.2.

C.2 Methodology

The process for designing the control circuit is divided into sections as discussed in this guide. Each block of the control circuit is evaluated on the basis of the system requirement to determine the correct configuration for the application. The integration of the sections (blocks) of the control circuit, discussed as follows, will generate a valve control circuit.

a) Overload heater (see 6.1)
Detail B, Option 2 of figure 6 was chosen.

b) Limit/Torque switch (see 6.2)
This MOV has a required function in only the closed direction. Also, the valve is required to be limit opening and torque closing. Detail D of figure 8 was chosen for the open direction and figure 11 was chosen for the closed direction based on the type of valve control described in item c).

c) Valve control (see 6.3)
This MOV is required to close completely upon auto-initiation of valve travel. As identified, a full open/full closed control function is required. Detail D of figure 10 was chosen for the open direction and figure 11 was chosen for the close application with consideration of item b) for the combination limit/torque control.

d) Auto-initiation signal (see 6.3.4)
The MOV is required to close upon receipt of an auto-initiation signal. Therefore, in the closed direction a maintained auto-initiation signal is required in parallel with the manual signal (HS-XXX in figure 11).

e) Valve position indication (see 6.4)
Valve position indication is required for this application. The MOV is equipped with multiple limit switch mechanisms. Limit switch contacts 7 and 3 from figure 7 will be used to provide indication for the open and closed positions respectively.

f) Alarms (see 6.5)
Since the overloads are nondisabling, the alarm function will be initiated on an overload condition.

g) Motor contactor (see 6.6.)
The typical contactor coil configuration, as detailed in block 7 of figure 1, shall be used.

h) Interlocks (see 6.7)
This valve operation does not require an interlock to other control circuits.

i) Hardware and material (see 6.8)
The selection of hardware shall be compatible to control circuit parameters.

j) Valve antihammering (see 6.9)
Valve hammering is prevented by the 42C (IEEE Std C37.2-1991) contact in the close control circuit logic.

Copyright The Institute of Electrical and Electronics Engineers, Inc.
Provided by IHS under license with IEEE
No reproduction or networking permitted without license from IHS Not for Resale

C.3 Conclusion

The designed control circuit for the example MOV is detailed in figure C.2.

VALVE TAG NO.: HV-1234

SYSTEM: _____

1.	What is the specific valve design (gate, globe, butterfly)?	GATE
2.	What is the number of MOV limit switch mechanisms?	4
3.	The valve control type is categorized as: (full open/full closed, throttling, instantaneously reversible)?	FULL O/C
4.	What is the normal valve position?	OPEN
5.	Is the valve required to be torque or limit positioned open?	LIMIT
6.	Is the valve required to be torque or limit positioned closed?	TORQUE
7.	Is an auto-initiation signal required for the open direction?	NO
8.	Is an auto-initiation signal required for the closed direction?	YES/Maint.
9.	Is valve position indication required?	YES
10.	Does the MOV require a key lock switch?	NO
11.	Is this control circuit required to be interlocked to other control schemes?	NO

Figure C.1—Completed MOV system requirement data sheet

Copyright The Institute of Electrical and Electronics Engineers, Inc.
Provided by IHS under license with IEEE
No reproduction or networking permitted without license from IHS Not for Resale

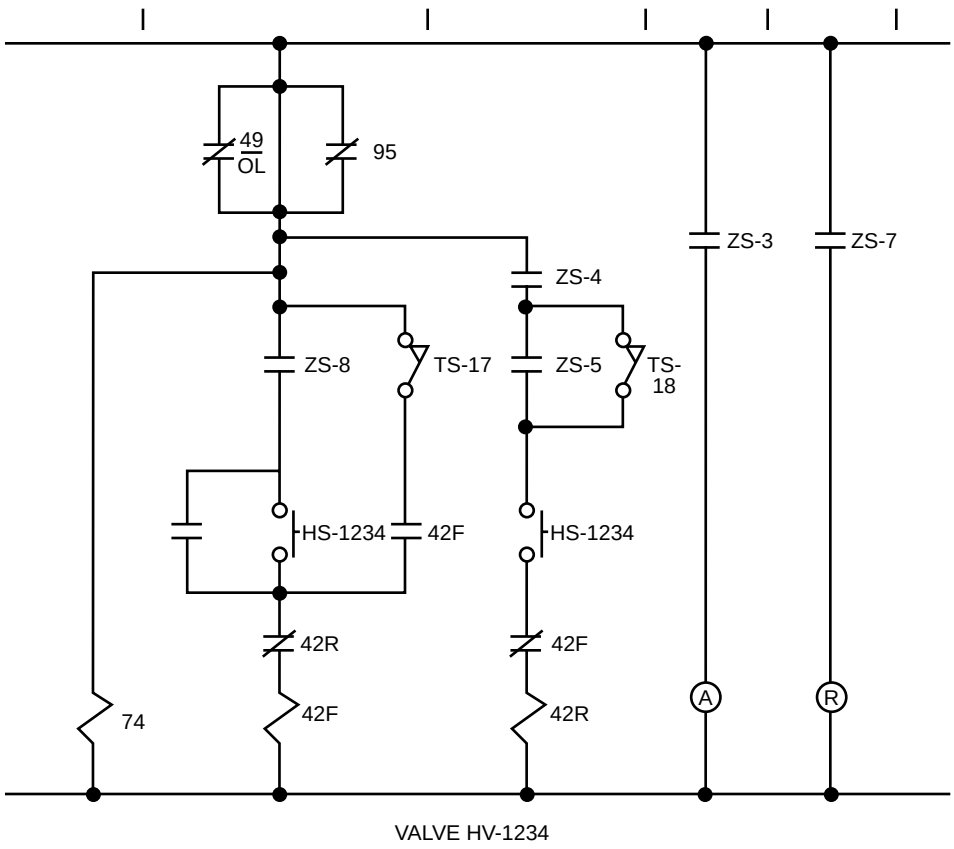

NOTE—This circuit will not provide alarm or indication when a thermal overload occurs while the bypass is in place, e.g., when a thermal overload occurs at the same time a safety injection signal is present.

Figure C.2—Final circuit design

Copyright The Institute of Electrical and Electronics Engineers, Inc.
Provided by IHS under license with IEEE
No reproduction or networking permitted without license from IHS
Not for Resale