American National Standard Inspection, Test, Construction, and Performance Requirements for Direct Reading Electrostatic/Electroscope Type Dosimeters

Sponsor

National Committee on Radiation Instrumentation, N42

Accredited by the

American National Standards Institute

Secretariat

Institute of Electrical and Electronics Engineers, Inc.

Approved 6 February 1997

American National Standards Institute

Abstract: Inspection, test, construction and performance requirements for direct reading electrostatic/electroscope type dosimeters designed to measure the personal dose equivalent or ambient exposure delivered by external sources of ionizing radiation (X-rays or gamma-rays) are given.
Keywords: dose equivalent, environmental monitoring, exposure, ionizing radiation, personnel dosimeter, radiation dosimeter, radiation instrumentation, specifications

The Institute of Electrical and Electronics Engineers, Inc.
345 East 47th Street, New York, NY 10017-2394, USA

Copyright © 1997 by the Institute of Electrical and Electronics Engineers, Inc.
All rights reserved. Published 1997. Printed in the United States of America.

ISBN 1-55937-904-9

No part of this publication may be reproduced in any form, in an electronic retrieval system or otherwise, without the prior written permission of the publisher.

Copyright The Institute of Electrical and Electronics Engineers, Inc.
Provided by IHS under license with IEEE
No reproduction or networking permitted without license from IHS
Not for Resale

IEEE Standards documents are developed within the IEEE Societies and the Standards Coordinating Committees of the IEEE Standards Board. Members of the committees serve voluntarily and without compensation. They are not necessarily members of the Institute. The standards developed within IEEE represent a consensus of the broad expertise on the subject within the Institute as well as those activities outside of IEEE that have expressed an interest in participating in the development of the standard.

Use of an IEEE Standard is wholly voluntary. The existence of an IEEE Standard does not imply that there are no other ways to produce, test, measure, purchase, market, or provide other goods and services related to the scope of the IEEE Standard. Furthermore, the viewpoint expressed at the time a standard is approved and issued is subject to change brought about through developments in the state of the art and comments received from users of the standard. Every IEEE Standard is subjected to review at least every five years for revision or reaffirmation. When a document is more than five years old and has not been reaffirmed, it is reasonable to conclude that its contents, although still of some value, do not wholly reflect the present state of the art. Users are cautioned to check to determine that they have the latest edition of any IEEE Standard.

Comments for revision of IEEE Standards are welcome from any interested party, regardless of membership affiliation with IEEE. Suggestions for changes in documents should be in the form of a proposed change of text, together with appropriate supporting comments.

Interpretations: Occasionally questions may arise regarding the meaning of portions of standards as they relate to specific applications. When the need for interpretations is brought to the attention of IEEE, the Institute will initiate action to prepare appropriate responses. Since IEEE Standards represent a consensus of all concerned interests, it is important to ensure that any interpretation has also received the concurrence of a balance of interests. For this reason, IEEE and the members of its societies and Standards Coordinating Committees are not able to provide an instant response to interpretation requests except in those cases where the matter has previously received formal consideration.

Comments on standards and requests for interpretations should be addressed to:

Secretary, IEEE Standards Board
445 Hoes Lane
P.O. Box 1331
Piscataway, NJ 08855-1331
USA

Note: Attention is called to the possibility that implementation of this standard may require use of subject matter covered by patent rights. By publication of this standard, no position is taken with respect to the existence or validity of any patent rights in connection therewith. The IEEE shall not be responsible for identifying patents for which a license may be required by an IEEE standard or for conducting inquiries into the legal validity or scope of those patents that are brought to its attention.

Authorization to photocopy portions of any individual standard for internal or personal use is granted by the Institute of Electrical and Electronics Engineers, Inc., provided that the appropriate fee is paid to Copyright Clearance Center. To arrange for payment of licensing fee, please contact Copyright Clearance Center, Customer Service, 222 Rosewood Drive, Danvers, MA 01923 USA; (508) 750-8400. Permission to photocopy portions of any individual standard for educational classroom use can also be obtained through the Copyright Clearance Center.

--`,,`-`-`,,`,,`,`,,`---
Copyright The Institute of Electrical and Electronics Engineers, Inc.
Provided by IHS under license with IEEE
No reproduction or networking permitted without license from IHS
Not for Resale

Introduction

(This introduction is not part of ANSI N322–1997, American National Standard Inspection, Test, Construction, and Performance Requirements for Direct Reading Electrostatic/Electroscope Type Dosimeters.)

This standard is the responsibility of the Accredited Standards Committee N42 on Radiation Instrumentation. Committee N42 delegated the development of this standard to its Subcommittee N42.RPI. Drafts were reviewed by Committee N42, Subcommittee N42.RPI, and other interested parties, and the comments received were utilized in producing the standard as finally approved. The standard was approved by N42 letter ballot of 2 April 1996.

At the time it approved this standard, the Accredited Standards Committee on Radiation Instrumentation, N42, had the following members:

Louis Costrell, *Chair* **Luigi Napoli,** *Administrative Secretary*

Organization Represented	*Name of Representative*
American Conference of Governmental Industrial Hygienists	Jesse Lieberman
Battelle Pacific Northwest Laboratories	Joseph C. McDonald
Health Physics Society	George Campbell
	Joseph R. Stencel (*Alt.*)
Institute of Electrical and Electronics Engineers	Louis Costrell
	Julian Forster (*Alt.*)
	Anthony J. Spurgin (*Alt.*)
Lawrence Berkeley Laboratory	Edward J. Lampo
Lawrence Livermore National Laboratory	Paul L. Phelps
MIT, Bates Linear Accelerator Center	Frank X. Masse
Oak Ridge National Laboratory	Charles L. Britton
Swinth Associates	Kenneth L. Swinth
US Department of the Army	Edward Groeber
US Department of Commerce, National Institute of Standards and Technology	Louis Costrell
	Michael P. Unterweger (*Alt.*)
US Department of Energy	Gerald Goldstein
US Federal Emergency Management Agency	Carl R. Siebentritt
Members-at-Large	Joseph C. Bellian
	Ernesto A. Corte
	Morgan Cox
	John M. Gallagher
	Jack M. Selby
	Al N. Tschaeche
	Edward J. Vallario
	Lee J. Wagner
	Sanford Wagner

At the time this standard was approved, Subcommittee N42.RPI had the following members:

Jack M. Selby, *Chair*

Joseph G. Bellian	Michele L. Johnson	C. R. Siebentritt
Morgan Cox	R. L. Kathren	Al N. Tschaeche
Dale Fleming	Jimmy Little	E. J. Vallario

The working group for this standard had the following members:

Copyright © 1997 IEEE. All rights reserved.

Copyright The Institute of Electrical and Electronics Engineers, Inc.
Provided by IHS under license with IEEE
No reproduction or networking permitted without license from IHS
Not for Resale

Joseph McDonald, *Chair*

Darryl Charbonneau	Frank Manning	D. M. Schaeffer
Leo Faust	Kevin Predmore	Carl Siebentritt
Hy Glasser	Dan Redman	E. F. Williams

The following persons were on the balloting committee that approved this document for submission to the American National Standards Institute:

Joseph G. Bellian	Gerald Goldstein	Anthony J. Spurgin
Charles L. Britton	Edward Groeber	Joseph R. Stencil
George Campbell	Edward J. Lampo	Kenneth L. Swinth
Ernesto A. Corte	Jesse Lieberman	Al N. Tschaeche
Louis Costrell	Frank X. Masse	Michael Unterweger
Morgan Cox	Paul L. Phelps	Edward J. Vallario
Julian Forster	Jack M. Selby	Lee J. Wagner
John M. Gallagher	Carl L. Siebentritt	Sanford Wagner

Rochelle L. Stern
IEEE Standards Project Editor

Copyright © 1997 IEEE. All rights reserved.
Copyright The Institute of Electrical and Electronics Engineers, Inc.
Provided by IHS under license with IEEE
No reproduction or networking permitted without license from IHS
Not for Resale

Contents

CLAUSE PAGE

1. Overview 1

1.1 Introduction 1
1.2 Scope 1
1.3 Purpose 1

2. References 2

3. Definitions 2

4. Conditions for dosimeter tests 4

4.1 Reference conditions 4
4.2 Standard test conditions 5
4.3 Position of instrument for purposes of tests 5
4.4 Minimum irradiation time 5
4.5 Specifications of irradiation room and calibration devices 5
4.6 Use of phantoms 5
4.7 Dosimeter charging pin 5

5. Quantities and units for radiations in specifications and tests 6

5.1 Radiation quantities and units specified and measured by dosimeters 6

6. Specifications and test requirements 6

6.1 General 6
6.2 Optical system 7
6.3 Charging and reading 7
6.4 Mechanical integrity 14
6.5 Radiological specifications and test requirements 14
6.6 Effects of environmental conditions on radiation response 17

7. Certification 18

Copyright © 1997 IEEE. All rights reserved.

Copyright The Institute of Electrical and Electronics Engineers, Inc.
Provided by IHS under license with IEEE
No reproduction or networking permitted without license from IHS
Not for Resale

American National Standard Inspection, Test, Construction, and Performance Requirements for Direct Reading Electrostatic/Electroscope Type Dosimeters

1. Overview

1.1 Introduction

The direct reading dosimeter is an instrument whose principles of operation can be briefly described as follows. The direct reading dosimeter is composed of a capacitor connected in parallel to an electroscope, where the moving element of the electroscope forms the central electrode of an ionization chamber. The ionization chamber is the radiation-sensitive element of the device. The capacitor and electroscope are usually charged in the range of 140 V to 195 V using an external charging unit. When the dosimeter is exposed to ionizing radiation, the electrical discharge of the capacitor is proportional to the total quantity of radiation deposited in the ionization chamber. The change in total electrical charge is measured by the electroscope. A visual display is provided by a built-in optical system that can be read using ambient light. This type of instrument can be manufactured to measure exposure, absorbed dose, or dose equivalent. The visual display will indicate a reading of the appropriate quantity.

1.2 Scope

The standard describes the requirements and the procedures for testing such dosimeters against these requirements. The requirements apply to direct reading dosimeters designed to measure ionizing electromagnetic radiation (X-rays or gamma-rays) with energies from approximately 20 keV to 3 MeV. Procedures are given for the testing of any accessory electrometers or chargers that are used to operate, or read-out, these dosimeters.

1.3 Purpose

The purpose of this standard is to specify the procedures to be used for the inspection, test, construction, and performance evaluation of direct reading dosimeters of the electrostatic/electroscope type.

--`,-`-`,,`,,`,`,,`---

Copyright © 1997 IEEE. All rights reserved.

Copyright The Institute of Electrical and Electronics Engineers, Inc.
Provided by IHS under license with IEEE
No reproduction or networking permitted without license from IHS
Not for Resale

2. References

This standard shall be used in conjunction with the following publications. When the following standards are superseded by an approved revision, the revision shall apply:

ANSI N42.17A-1989 (Reaff 1994), American National Standard Performance Specifications for Health Physics Instrumentation—Portable Instrumentation for Use in Normal Environmental Conditions.[1]

ANSI N42.17C-1989 (Reaff 1994), American National Standard Performance Specifications for Health Physics Instrumentation—Portable Instrumentation for Use in Extreme Environmental Conditions.

ICRP 26 (1977), Recommendations of the International Commission on Radiological Protection.[2]

ICRU 33 (1980), Radiation Quantities and Units.[3]

ICRU 39 (1985), Determination of Dose Equivalents Resulting from External Radiation Sources.

ICRU 43 (1988), Determination of Dose Equivalents from External Radiation Sources—Part 2.

ICRU 47 (1992), Measurement of Dose Equivalents from External Photon and Electron Radiations.

IEC CD 45B (1991), Direct reading personal dose equivalent and/or dose equivalent rate monitors for X, gamma and high-energy beta radiations.[4]

ISO/DIS 11934 (1996), Indirect or direct reading capacitor-type pocket dosemeters.[5]

NIST Special Publication 250-16–1988, Calibration of X-Ray and Gamma—Ray Measuring Instruments.[6]

3. Definitions

For the purpose of this document, the following definitions apply to this standard:

3.1 absorbed dose (D): The quotient of $d\bar{\varepsilon}$ by dm, where $d\bar{\varepsilon}$ is the mean energy imparted by ionizing radiation to matter of mass, dm.

3.2 accuracy: The difference between the indicated, or measured value, of a quantity and the conventional true value of that quantity.

3.3 calibration: A quantitative determination under a controlled set of standard test conditions, of the indication given by a dosimeter as a function of the value of the quantity to be measured.

---

[1]ANSI publications are available from the Sales Department, American National Standards Institute, 11 West 42nd Street, 13th Floor, New York, NY 10036, USA.

[2]ICRP publications are available from Elsevier Science, Inc., 655 Avenue of the Americas, New York, NY 10010, USA.

[3]ICRU publications are available from International Commission on Radiation Units and Measurement, 7910 Woodmont Avenue, Suite 800, Bethesda, MD 20814, USA.

[4]IEC publications are available from IEC Sales Department, Case Postale 131, 3, rue de Varembé, CH—1211, Genève 20, Switzerland/Suisse. IEC publications are also available in the United States from the Sales Department, American National Standards Institute, 11 West 42nd Street, 13th Floor, New York, NY 10036, USA.

[5]ISO publications are available from the ISO Central Secretariat, Case Postale 56, 1 rue de Varembé, CH—1211, Genève 20, Switzerland/Suisse. ISO publications are also available in the United States from the Sales Department, American National Standards Institute, 11 West 42nd Street, 13th Floor, New York, NY 10036, USA.

[6]NIST publications are available from the National Institute for Science and Technology, US Dept. of Commerce, Washington, DC 20234, USA.

Copyright © 1997 IEEE. All rights reserved.
Copyright The Institute of Electrical and Electronics Engineers, Inc.
Provided by IHS under license with IEEE
No reproduction or networking permitted without license from IHS
Not for Resale

3.4 calibration factor (N): The conventional true value of the quantity the dosimeter is intended to measure, V, divided by its indication, M, (corrected as necessary).

3.5 calibration quantity: A physical quantity used to establish the characteristics of the dosimeter.

3.6 conventional true value of a quantity: The best estimate of a quantity determined by a primary or secondary standard, or by a reference instrument that has been calibrated against a primary or secondary standard.

3.7 direct reading dosimeter, electrostatic/electroscope type: An instrument that permits the direct reading of the quantity of radiation present at the instrument. Such a device consists essentially of an ionization chamber connected to a capacitor. This capacitor is charged by a charging device, which may or may not be built into the dosimeter. Exposure of the instrument to ionizing radiation causes a decrease in the charge on the capacitor causing a charge indicator to deflect with respect to a calibrated scale that is observable through a self-contained optical system.

3.8 dose equivalent (H): The product of the absorbed dose and the quality factor, Q, at the point of interest in tissue.

$$H = DQ$$

The shallow and deep dose equivalents, H_s, and H_d, are the dose equivalents at depths in tissue of 0.07 mm and 10 mm, respectively.

The SI unit of dose equivalent has been given the special name of sievert (Sv).

$$1\ Sv = 1\ J/kg$$

NOTE—For photon and beta radiation, Q may be taken as equal to unity for external radiations.

3.9 geotropism: Sensitivity of an instrument to gravitational effects resulting in a change in indication depending on the orientation of the instrument with respect to the ground surface.

$$N = V/M$$

The calibration factor is dimensionless when the instrument indicates the quantity to be measured. A dosimeter that indicates the conventional true value correctly has a calibration factor of one.

NOTE—The reciprocal of the calibration factor is equal to the response under reference conditions. The response refers to any conditions prevailing; however, the calibration factor refers to the reference conditions only.

3.10 kerma (K): The quotient of dE_{tr} by dm where dE_{tr} is the sum of the initial kinetic energies of all the charged ionizing particles liberated by uncharged ionizing particles in a material of mass dm. The SI unit of kerma is the J/kg. The special name for the unit of kerma is gray (Gy).

NOTE—Air kerma free-in-air, K_a should now be used in place of the quantity exposure. The relationship between exposure and air kerma is expressed in the following equation:

$$K_a = X\ [(W/e)/(1—g)]$$

where

X is the exposure expressed in the SI units of C/kg
W/e is the mean energy per unit charge expended in air by electrons (J/C)
g is the mean fraction of the energy of the secondary electrons that is lost to bremsstrahlung.

Copyright © 1997 IEEE. All rights reserved.

Copyright The Institute of Electrical and Electronics Engineers, Inc.
Provided by IHS under license with IEEE
No reproduction or networking permitted without license from IHS Not for Resale

Using the currently accepted values for W/e and g, K_a is computed by multiplying X by 34.08 and 34.02 J/C for ^{60}Co and ^{137}Cs, respectively. The conversion factor for x-ray beams used in this standard is 33.97 J/C.

3.11 precision: The degree of agreement, or uniformity, in a set of repeated measurements of the same quantity.

3.12 reading: The value of the quantity indicated by a dosimeter. This indication may be displayed in terms of the previously used quantity, exposure, which can be converted to the SI quantity, air kerma, by the procedure given in the definition for kerma in 3.10.

3.13 reference conditions: The reference conditions that represent the set of influence quantities for which the calibration factor is valid without any correction.

3.14 response (of a dosimeter): The quotient of the indicated value of the quantity read from the dosimeter to the conventional true value of this quantity.

3.15 standard test conditions: The standard test conditions that represent the range of values of a set of influence quantities under which a calibration or determination of response is carried out.

NOTE—Ideally, calibrations should be performed under reference conditions. However, this is not always achievable in practice (e.g., for atmospheric pressure or ambient temperature). Therefore, a small interval around the reference values can be used. The deviations of the calibration factor from its value under reference conditions caused by these deviations should, in principle, be corrected for. The uncertainty required serves as a guide as to which influence quantity has to be taken into account by an explicit correction, or whether its effect may be incorporated into the uncertainty.

3.16 type test: A test of one or more devices made to determine whether their design meets certain specifications.

4. Conditions for dosimeter tests

4.1 Reference conditions

The required reference conditions for environmental (or influence) quantities, such as temperature and atmospheric pressure, as well as those other quantities that may affect the performance of the instruments, are given in Table 1.

Table 1—Reference and standard test conditions

Quantity	Reference conditions	Standard test conditions
Ambient temperature	22 °C	20–24 °C
Relative humidity	65%	50–75%
Atmospheric pressure	101.3 kPa	70–106 kPa
Stabilization time	≤ 10 min	≤ 10 min
Reference point	Effective center (as marked)	Effective center (as marked)
Reference radiation	^{137}Cs	^{137}Cs
Reference phantom	30 × 30 × 15 cm PMMA	30× 30× 15 cm PMMA

Copyright © 1997 IEEE. All rights reserved.
Copyright The Institute of Electrical and Electronics Engineers, Inc.
Provided by IHS under license with IEEE
No reproduction or networking permitted without license from IHS
Not for Resale

4.2 Standard test conditions

Reference conditions are given in Table 1. Except where otherwise specified, the tests in this standard shall be carried out under the standard test conditions given in Table 1. For the tests not carried out under standard test conditions, the values of the relevant influence quantities at the time of the test shall be stated. If possible, appropriate corrections shall be made to give the response under reference conditions.

For those tests intended to determine the effects of variations in the quantities given in Table 1, all other quantities should be maintained within the limits for standard test conditions given in Table 1, unless otherwise specified in the test procedure concerned.

4.3 Position of instrument for purposes of tests

For all tests involving the use of radiation, the reference point of the instrument shall be placed at the point where the conventional true value of the quantity to be measured is known and in an orientation with respect to the direction of the radiation field as specified by the manufacturer. In most cases, the dosimeter is positioned so that the radiation impinges perpendicularly to its principal (long) axis, with the principal axis perpendicular to the floor. The dosimeter fiber image postion shall be determined by holding the dosimeter vertically. This shall not be required for testing of geotropism and the variation of response with the angle of radiation incidence.

4.4 Minimum irradiation time

If a radioactive source is used for irradiations, then the duration of the irradiation must be at least 100 times longer than the time necessary for transporting the source to the exposure position. If this condition cannot be met, the change in the radiation quantity due to the movement of the source to and from the exposure position shall be taken into account.

4.5 Specifications of irradiation room and calibration devices

The irradiation room should contribute a minimal scatter component to the calibration radiation. The degree of scatter should be evaluated by computer modeling or measurement of the deviation of the source intensity vs. distance from the inverse distance squared dependence expected from a point source.

The irradiation table and supports should be made of low atomic number materials with a minimum mass.

The distance between dosimeters should be such that the range of readings does not vary by more than 3% of the indicated value.

4.6 Use of phantoms

Irradiations described in these tests need not always be performed with the dosimeter mounted on a phantom, but may be done more simply, free in air. The irradiation geometry should be consistent with the intended application of the dosimeter.

4.7 Dosimeter charging pin

The charging pin of the dosimeter shall always be shorted electrically to the barrel of the dosimeter after charging. Shorting the charging pin to the dosimeter barrel ensures that any electrical charge left on the charging pin has been discharged. With this parasitic influence removed, the results of tests on the ionization chamber-electrometer system will be unambiguous. If the pin is not shorted, it could have adverse effects on

--`,,-`-`,,`,,`,`,,`---

Copyright © 1997 IEEE. All rights reserved.

Copyright The Institute of Electrical and Electronics Engineers, Inc.
Provided by IHS under license with IEEE
No reproduction or networking permitted without license from IHS Not for Resale

many of the radiological and electrical leakage tests specified. Pin shorting may cause the fiber image to shift on most low range, less than 500 mrem (5 mSv), dosimeters. For accurate measurements, this shift is taken into account by determining net indications. When shorting the charging pin, care shall be exercised to avoid closing the dosimeter charging switch.

5. Quantities and units for radiations in specifications and tests

5.1 Radiation quantities and units specified and measured by dosimeters

The quantity of radiation indicated by many direct reading dosimeters is exposure. The units indicated on the scales of many direct reading dosimeters are roentgens (R) or milliroentgens (mR). This standard gives specifications and procedures for testing direct reading dosimeters that make use of quantities that are recommended by the International Commission on Radiation Units and Measurement (ICRU) and are consistent with Systéme International d'Unitès (SI) notation. SI units are indicated, followed by conventional units in parentheses.

The basic radiation quantity specified is air kerma and the unit of this quantity is the gray (or one Joule per kilogram). Methods for the conversion from exposure to air kerma, and relationships between the units of roentgens and grays have been provided in the kerma definition 3.10.

6. Specifications and test requirements

6.1 General

The following subclauses are intended to specify the general requirements expected of dosimeters along with the tests to verify the specifications.

6.1.1 Workmanship

Requirement—The dosimeter shall be inspected for care in assembly, quality, exterior finish, proper markings, and the absence of pits, cracks, discoloration, burrs, sharp edges, or other surface flaws. The interior features, such as alignment of the fiber image with scale markings over the full length of the scale, legibility of the scale, and engravings shall be inspected to determine defects, which may detract from the readability or accuracy of the dosimeter.

Test—Make a visual inspection of completed dosimeters.

6.1.2 Markings

Requirement—The scale of the dosimeter shall be marked in appropriate units. The scale shall indicate the unit used and be divided into at least ten and not more than 25 divisions.

Test—Make a visual inspection.

Requirement—Each dosimeter shall be provided with a unique serial number, or identification, for recording purposes.

Test—Make a visual inspection.

Copyright © 1997 IEEE. All rights reserved.
Copyright The Institute of Electrical and Electronics Engineers, Inc.
Provided by IHS under license with IEEE
No reproduction or networking permitted without license from IHS
Not for Resale

6.1.3 Clip

Requirement—The dosimeter shall be equipped with a clip for the purpose of holding it to the user's attire. The clip shall be affixed to afford resistance to removal and rotation. The clip shall be operational after opening and closing 500 times and then shall hold to a cotton cloth, approximating the thickness of conventional shirt fabric, with an applied force of 9.5 N (1 lb).

Test—The clip shall be opened and closed 500 times at a rate of one cycle per second. The dosimeter shall be attached to a cotton cloth, approximating the thickness of conventional shirt fabric, with the clip. The dosimeter shall be held in a fixed position while pulling on the cloth with a spring force gauge indicating a force of approximately 9.5 N (1 lbf). The dosimeter shall remain attached to the cloth while withstanding 9.5 N (1 lbf).

6.2 Optical system

6.2.1 Resolution

Requirement—The optical system of the dosimeter shall permit the electroscope fiber image to be clearly resolved relative to the scale division, over the entire scale.

Test—The dosimeter shall be exposed to an illumination of 55 lux (5 fc) from a diffuse source at the charging end. The focus and contrast of the fiber and reticle shall permit resolution of readings to with 2% of full scale across the entire scale.

6.2.2 Fiber image orientation

Requirement—The image of the fiber shall appear as a line parallel to the scale markings to within 2% of full scale.

Test—The charging potential shall be adjusted so that the image of fiber coincides with the bottom of any major scale division. The distance between the image of the fiber and the top of that same major division shall not be greater than 2% of full scale.

6.3 Charging and reading

6.3.1 Requirements for dosimeters

Specific physical dimensions for dosimeters are given in these specifications to ensure compatibility with chargers. A diagram, shown in Figure 1, indicates the positions for the specified dimensions.

Copyright © 1997 IEEE. All rights reserved.

Copyright The Institute of Electrical and Electronics Engineers, Inc.
Provided by IHS under license with IEEE
No reproduction or networking permitted without license from IHS Not for Resale

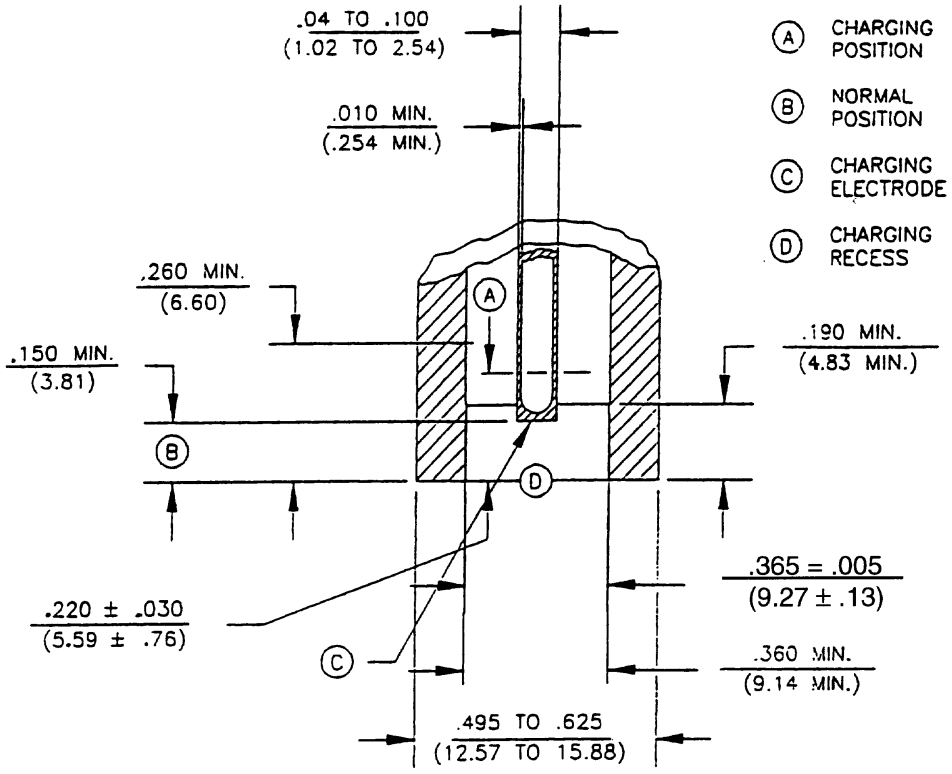

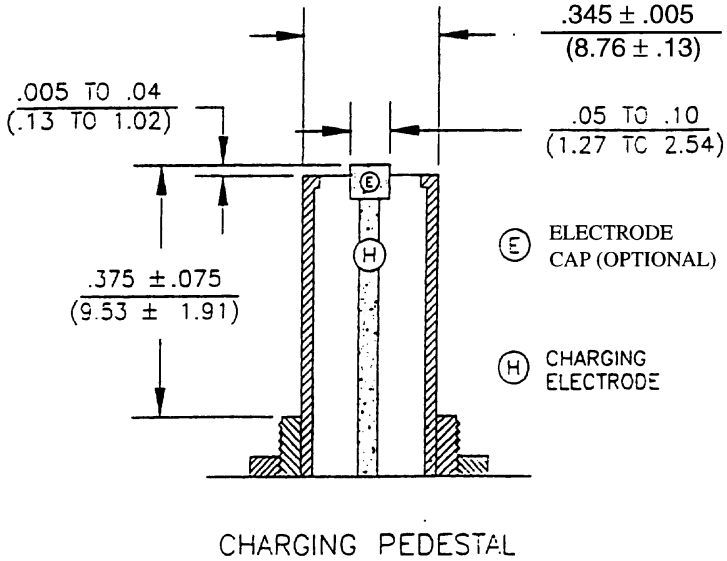

NOTE—Dimensions in inches and millimeters. Original dimensions in inches.

Figure 1—Dimensions applicable to dosimeter and charger

Copyright © 1997 IEEE. All rights reserved.
Copyright The Institute of Electrical and Electronics Engineers, Inc.
Provided by IHS under license with IEEE
No reproduction or networking permitted without license from IHS
Not for Resale

6.3.1.1 Zero set voltages

Requirement—The voltage required for zero set shall be in the range of 140–195 V.

Test—Connect a high impedance voltmeter to the output terminals of the dosimeter charger. Charge a dosimeter to zero with this charger. Maintain the dosimeter's force on the charger to assure that the dosimeter switch remains closed while reading the voltage. The voltage required to adjust the dosimeter to zero shall be greater than 140 V and less than 200 V. The full-scale voltage is expected to be at least 90 V. The polarity for this voltage shall be verified to be positive for the center pin with respect to the barrel.

6.3.1.2 Distance to charging electrode

Requirement—The distance from the end of the exposure meter to the charging electrode in the charging position shall be 5.59 mm ± 0.76 mm (0.22 in ± 0.03 in) in the charging position and 3.81 mm (0.15 in) minimum in the normal position.

Test—Make a mechanical inspection and verification of dimensions.

6.3.1.3 Force to close switch in dosimeter

Requirement—The charging electrode shall make electrical contact with the internal electrometer under an applied force of from 11 N (2.5 lbf) to 25 N (5.5 lbf) over a temperature range of 10 °C to 50 °C.

Tests:

a) *Under standard test conditions for temperature*—Charge the dosimeter. With a force gauge, whose probe has been electrically connected to the dosimeter barrel and is designed to fit inside the charging recess of the dosimeter, apply approximately 11 N (2.4 lbf) to the dosimeter charging pin. Observe the scale reading. The fiber image shall remain on scale.
   Apply approximately 25 N (5.6 lbf) to the dosimeter charging pin and observe the scale reading again. The fiber image shall disappear.
b) *Under temperature extremes*—Under temperature extremes, a special test fixture is required. It must include a spring force gauge and respond to a change in capacitance when contact is made between the charging switch and inner electrode of the dosimeter. Ramp the chamber temperature as quickly as possible to –10 °C ± 2 °C and hold for 2 h. While at the test temperature, actuate the force gauge until capacitance meter reads that a connection is made by the dosimeter internal charging switch. The force required for connection must be between 9–27 N (2–6 lbf). Ramp the chamber temperature as quickly as possible to +50 °C ± 2 °C hold for 2 h. Repeat the force test for compliance at this temperature.

6.3.1.4 Charging recess diameter

Requirement—The diameter of the charging recess shall be 9.27 ± 0.13 mm (0.365 ± 0.005 in) to a depth of at least 4.83 mm (0.190 in). The diameter of the charging recess shall be a minimum of 9.14 mm (0.36 in) to a depth of at least 6.60 mm (0.26 in).

Test—Make a mechanical inspection and verification of dimensions.

6.3.1.5 Outside diameter

Requirement—The dosimeter shall be cylindrical and shall have an outside diameter on the portion that inserts into the charger, of 15.9 mm (0.625 in) maximum and 12.57 mm (0.495 in) minimum. The remaining portion shall have a diameter, exclusive of the clip and marking, of 18.0 mm (0.709 in) maximum.

Test—Make a mechanical inspection and verification of dimensions.

Copyright © 1997 IEEE. All rights reserved.

Copyright The Institute of Electrical and Electronics Engineers, Inc.
Provided by IHS under license with IEEE
No reproduction or networking permitted without license from IHS Not for Resale

6.3.1.6 Length

Requirement—The dosimeter shall not exceed 15 cm (6 in) in length.

Test—Make a mechanical inspection and verification of dimensions.

6.3.1.7 Center electrode diameter

Requirement—The charging electrode shall have an outside diameter of from 1.02 mm (0.04 in) to 2.54 mm (0.10 in). If it has a tubular construction, the electrode shall have a wall thickness of at least 0.25 mm (0.01 in), and the tube shall have a closed end.

Test—Mechanical inspection and verification of dimensions.

6.3.1.8 Electrode concentricity

Requirement—The charging electrode shall be coaxial with the charging receptacle to within 0.13 mm (0.005 in).

Test—Make a mechanical inspection and verification of dimension.

6.3.1.9 Change in indication after charging

Requirement—Fiber deflection occurring when the instrument is disconnected from the charging source shall not exceed 2% of full scale.

Test—Upon the completion of charging and adjusting the dosimeter to zero scale reading, the pressure on the dosimeter charging switch shall be released. The dosimeter shall then be removed from the charging receptacle. The charging electrode of the dosimeter shall then be electrically shorted to the barrel of the dosimeter and the scale reading again observed. The difference in reading shall not exceed 2% of full scale.

6.3.1.10 Electrical leakage

Requirement—A fully charged dosimeter shall not change its reading by more than 5% of full scale over a period of 48 h. This requirement applies over a temperature range of –10 °C to 50 °C.

Test—Charge the dosimeters to zero reading and place into an environmental chamber. Ramp the chamber as quickly as possible from –10 °C to +50 °C ± 2 °C, while maintaining relative humidity at standard test conditions. Hold the dosimeters in this environment for 48 h, and then restore temperature to standard test conditions. Remove the dosimeters from the chamber and read.

6.3.1.11 Electrical leakage after heavy irradiation

Requirement—The electrical leakage for dosimeters after heavy irradiation shall not exceed:

a) Two percent (2%) of full scale while under standard test condition during the first 4 h after exposure.
b) Five percent (5%) of full scale during the first 48 h after exposure under standard test conditions.
c) Ten percent (10%) of full scale after 5 days at 50 °C ± 2 °C. Readings are to be taken after dosimeters return to room temperature. The test of this requirement directly follows the 48 h test period described above.

Test—The dosimeters shall be exposed to a total value of air kerma of 20 Gy at a rate of 1 Gy/h to 10 Gy/h. Within 10 min after the appropriate exposure, charge the dosimeters to zero. Store the dosimeters under standard test conditions for the 4 h test period and then read. Store and read the dosimeters again after 48 h while

Copyright © 1997 IEEE. All rights reserved.
Copyright The Institute of Electrical and Electronics Engineers, Inc.
Provided by IHS under license with IEEE
No reproduction or networking permitted without license from IHS
Not for Resale

under standard test conditions. Immediately after this 48 h test, the dosimeters shall be recharged to zero indication and placed into an environmental chamber. The chamber shall be ramped to 50 °C ± 2 °C while maintaining relative humidity at standard test conditions. The dosimeters shall be held in this environment for 5 days. The chamber shall then be ramped to standard test conditions for temperature, and the dosimeter removed and read.

6.3.1.12 Charging life

Requirement—Each dosimeter shall be capable of meeting all of the requirements of this specification after 2500 charging operations.

Test—A force of approximately 18 N (4 lbf) shall be applied to the dosimeter charging pin for 1 s. This force shall be released for an additional 1 second. This cycle shall be repeated 2500 times. The dosimeter shall be fully operational and meet the environmental seal and electrical leakage test after cycling.

6.3.1.13 Effect of humidity

Requirement—A fully charged dosimeter shall not discharge more than 5% of full scale in 2 days when exposed to 90% relative humidity at 50 °C for two days.

Test—Dosimeters shall be charged to zero and then placed into an environmental chamber. The chamber's temperature shall be ramped to 50 °C ± 2 °C, and then the relative humidity ramped to 90% ± 3%. They shall remain in this environment for 48 h, then the chamber shall be ramped to standard test conditions. The dosimeters shall be removed from the chamber and read.

6.3.2 Requirements for charger

The locations of physical dimensions specified in these subsections are indicated in Figure 1.

Requirement—A charger is required to set the dosimeter to zero. The charger may have a moving, or a fixed, pedestal. The type used depends on the method used to connect the dosimeter to the charger, either by hand or by a clamping arrangement.

Test—Mechanical inspection and verification, in addition to electrical tests, is specified herein.

6.3.2.1 Charger voltage

Requirement—The charging potential shall be continuously variable between 100 V and 220 V and shall be of positive polarity at the center electrode.

Test—Connect a high impedance voltmeter to a charger's output terminals. Measure the voltage and observe the polarity.

6.3.2.2 Hand powered moving pedestal

Requirement—The dosimeter is charged by holding it firmly on the charger pedestal. The overall active height of the pedestal from the top of the charging electrode to the top of the bottoming feature shall be 9.53 mm ± 1.91 mm (0.375 in ± 0.075 in).

Test—Make a mechanical inspection and verification of dimensions.

Copyright © 1997 IEEE. All rights reserved.

Copyright The Institute of Electrical and Electronics Engineers, Inc.
Provided by IHS under license with IEEE
No reproduction or networking permitted without license from IHS Not for Resale

6.3.2.3 Self clamping fixed pedestal

Requirement—A fixed pedestal may be used in a spring loaded self clamping arrangement for holding the dosimeter while charging. The overall height of the pedestal from the top of the charging electrode to the bottom shall be 7.0 mm ± 0.66 mm (0.275 in ± 0.025 in).

Test—Make a mechanical inspection and verification of dimension.

6.3.2.4 Force limiting feature

Requirement—As a dosimeter is moved downward over the charging contact assembly, forces in excess of 49.5 N (11 lbf) shall cause the dosimeter barrel to bottom with the nonmoving mounting of the charging contact assembly. (This applies only to the moving pedestal). For a self-clamping charger, the clamping feature shall limit to 49.5 N (11 lbf), the amount of force that can be applied to the dosimeter electrode.

Test—Make appropriate measurements using a spring force gauge.

6.3.2.5 Charging electrode force

Requirement—The charging electrode shall be capable of applying a force of between 36 N and 49.5 N (8 lb to 11 lbf) to the charging pin of the dosimeter. In no case shall it be possible to apply more than 49.5 N (11 lbf) to the charging pin of the dosimeter.

Test—Make appropriate measurements using a spring force gauge.

6.3.2.6 Light switch force (optional)

Requirement—The force required to activate the light switch (if included) shall be between 1.1 N (0.25 lbf) and 6.8 N (1.5 lbf).

Test—Make appropriate measurements using a spring force gauge.

6.3.2.7 Pedestal diameter

Requirement—The outside diameter of the charging pedestal shall be 8.76mm ± 0.13 mm (0.34 in ± 0.005 in).

Test—Make a mechanical inspection and verification of dimension.

6.3.2.8 Charging electrode diameter

Requirement—The diameter of the contact end of the charging electrode shall be 1.91 mm ± 0.64 mm (0.975 in ± 0.25 in).

Test—Make a mechanical inspection and verification of dimension.

6.3.2.9 Charging electrode height

Requirement—The charging electrode or cap shall extend above the top of the charging pedestal no less than 0.13 mm (0.005 in) and no more than 1.02 mm (0.040 in).

Test— Make a mechanical inspection and verification of dimension.

Copyright © 1997 IEEE. All rights reserved.
Copyright The Institute of Electrical and Electronics Engineers, Inc.
Provided by IHS under license with IEEE
No reproduction or networking permitted without license from IHS
Not for Resale

6.3.2.10 Electrode concentricity

Requirement—The charging electrode shall be coaxial with the pedestal within 0.13 mm (0.005 in).

Test—Make a mechanical inspection and verification of dimension.

6.3.2.11 Light switch travel

Requirement—The light shall be turned on when a dosimeter is placed in position on the charging contact assembly and is moved downward a distance no greater that 3.18 mm (0.125 in).

Test—Mechanical inspection and verification of dimension.

6.3.2.12 Charging recess

Requirement—If the pedestal is recessed in a well, the minimum inside diameter of the charging socket well shall be 16 mm (0.630 in).

Test—Mechanical inspection and verification of dimension.

6.3.2.13 Contact

Requirement—The contact resistance between any two surfaces designated to be at the same electrical potential shall not exceed 1 MΩ.

Test—Verify using an ohmmeter.

6.3.3 Requirements for both dosimeter and charger

6.3.3.1 Contact

Requirement—During the normal charging operation, the dosimeter and charger shall provide for electrical contacts between both the center electrodes and the grounded surfaces, or cases of each. At no time during the operation shall the contact resistance between the dosimeter and charger exceed 1 MΩ for each of these contacts.

Test—Verify using an ohmmeter.

6.3.3.2 Light

Requirement—The charging unit shall permit the position of the indicating element on the scale of the dosimeter to be clearly resolved (see 6.2). If the charger has self-contained illumination using a battery, this criterion shall apply over the life of the battery utilized.

Test—Verify requirement using a power source adjusted to simulate the voltage supplied by fresh and depleted batteries.

6.3.4 Reading the dosimeter

6.3.4.1 Geotropism

Requirement—A special characteristic of direct reading dosimeters is the effect of gravity on the indicator (geotropism). This effect is observed as the fiber-image shift when the instrument is held horizontally and rotated about its optical axis. This shift shall not exceed ± 5% of maximum scale value.

Copyright © 1997 IEEE. All rights reserved.

Copyright The Institute of Electrical and Electronics Engineers, Inc.
Provided by IHS under license with IEEE
No reproduction or networking permitted without license from IHS Not for Resale

Test—With the dosimeter charged to midscale and held horizontally, read the dosimeter with the scale upright and horizontal, rotated 90° in each direction, and with the scale inverted. The change in reading shall not exceed ±5% of the maximum scale value.

6.4 Mechanical integrity

6.4.1 Shock

Requirement—The construction of the dosimeter shall be such that, when dropped on a hard wood surface from a height of 1.5 m, the dosimeter reading shall not change by more than ± 5% of full scale. The dosimeter shall be capable of meeting the remaining requirements of this specification given below, upon completion of this test.

Test—Charge the dosimeter to midscale and do not recharge at any time during the test sequence. Drop the dosimeter once on each end, and twice on its side, in random axial orientations, from a height of 1.5 m to a hard wood surface. The dosimeter shall be read after each drop to verify compliance. Upon completion, perform tests for electrical leakage, accuracy, and environmental seal (if applicable) as described in 6.3.1.10, 6.5.12, and 6.6.1.

6.4.2 Immersion (for watertight-specified dosimeters)

Requirement—The dosimeter shall be resistant to the effects of immersion in water at a depth of 30 cm.

Test—Immerse the dosimeter in water at a depth of 30 cm, for 1 h. After immersion there shall be no visible moisture within the dosimeter. The dosimeter shall also meet the electrical leakage requirement of 6.3.1.10.

6.4.3 Temperature effect on indication

Requirement—The fiber image position in a dosimeter shall not vary by more than ± 5% of full scale when the dosimeter temperature is changed from standard test conditions to a temperature range from 0 °C to +50 °C ± 2 °C, while keeping the relative humidity within the range allowed for standard test conditions.

Test—Charge the dosimeter to midscale at standard test temperature. Change the temperature of the dosimeter to 0 °C ± 2 °C and hold for 2 h. Read the dosimeter indication at this temperature. Change the dosimeter temperature to the standard test temperature, hold for 2 h and read the indication. Change the dosimeter temperature to +50 °C ± 2 °C, hold for 2 h, and read indication at this temperature. Restore the dosimeter to the standard test temperature, hold for 2 h and read. The readings at the test temperatures shall not vary from the initial or final test temperature readings by more than ±5% of full scale.

6.5 Radiological specifications and test requirements

Tests specified herein shall be conducted under the standard test conditions given in Table 1. ^{137}Cs shall be used unless another radiation is specified by the manufacturer. In that case, the reference radiation shall be selected from Table 2.

Copyright © 1997 IEEE. All rights reserved.
Copyright The Institute of Electrical and Electronics Engineers, Inc.
Provided by IHS under license with IEEE
No reproduction or networking permitted without license from IHS
Not for Resale

Table 2— Air kerma to dose equivalent conversion factors [H_d/K_a (Sv/Gy)]

Radiation type		Conversion factor
Isotope sources		
^{241}Am		1.74
^{137}Cs		1.21
^{60}Co		1.16
Filtered x-ray beams	**NIST beam code**	**Conversion factor**
Average energy (keV)		
20	M30	0.42
35	M60	1.00
53	M100	1.52
73	M150	1.78
118	H150	1.71

6.5.1 Precision (repeatability)

Requirement—Exposure to the same quantity of radiation in identical conditions, including the same operator, should not result in the response of any dosimeter deviating from the average reading of all dosimeters by more than 5%.

Test—Set three dosimeters to have a reading of zero. Irradiate them to indicate between 50% and 80% of the scale range. Then read and reset them to zero. Repeat the test 10 times. Calculate the mean reading, r_{avg}, for each dosimeter. For any dosimeter, calculate the maximum relative deviation of any reading from the mean using the following formula:

$$|r - r_{avg}| / (r_{avg})$$

6.5.2 Accuracy

Requirement—The response of the dosimeter to ^{137}Cs radiation (or other sources of radiation from Table 1 specified by the manufacturer) shall be within ±10% of the quantity of radiation delivered.

Test—Select 10 dosimeters and charge them to a zero indication. Using ^{137}Cs radiation, or the reference radiation specified by the manufacturer and selected from Table 1, irradiate the dosimeters with a quantity of radiation equivalent to 50% of the full scale range within a period of at least 5 min to no more than 100 min. Read the response of each dosimeter and record the result, which shall in each case be within ±10% of the quantity of radiation delivered.

Copyright © 1997 IEEE. All rights reserved.

Copyright The Institute of Electrical and Electronics Engineers, Inc.
Provided by IHS under license with IEEE
No reproduction or networking permitted without license from IHS Not for Resale

6.5.3 Linearity

Requirement—The response of the dosimeter to repeated exposures of the same quantity of radiation (^{137}Cs or other sources of radiation specified by the manufacturer and selected from Table 1) over its range of measurement, shall be within ±10% of the quantity of radiation delivered.

Test—Select 10 dosimeters and charge them to a zero indication. Using ^{137}Cs or the reference radiation selected from Table 2, if specified by the manufacturer, irradiate the dosimeters with a quantity of radiation that will produce a reading of 20% of full scale. The time to deliver the radiation shall be at least 5 and not more than 100 min. Read the response of each dosimeter and record the result. Without recharging the dosimeters, repeat the exposure to an identical quantity of radiation, which shall be equivalent to another 20% of full scale increase in the reading. Read and record the result, which should produce a 40% increase in the reading. Without recharging the dosimeters, repeat the exposures to the same quantity of radiation, which should produce readings of 60% and 80% of full scale. Read and record these results. The response of any dosimeter in this group shall be within ±15% of the delivered quantities of radiation to achieve the 20%, 40%, 60%, and 80% of full scale readings.

6.5.4 Energy dependence of response

Requirement—Within the stated energy range, specified by the manufacturer, the response of the dosimeter to radiation energies within the range shall be within ±20% of the response to the same quantity of radiation delivered by the reference radiation used for calibration (i.e., ^{137}Cs). For dosimeters specified to cover energies below 60 keV, the response shall be within +25% and ±30% of the response to the reference radiation used for accuracy testing.

Test—Personnel dosimeters to be tested are to be placed in contact with, and at the center of, the front face of a phantom made of polymethylmethacrylate (PMMA) measuring 30 × 30 × 15 cm. Area monitoring dosimeters can be tested free in air. If the quantity of radiation is to be in terms of dose equivalent, then H_d can be calculated from air kerma, K_a, with the conversion factors given in Table 2. Using three different dosimeters, successively perform the following operations: place one dosimeter on the center of the front face of the PMMA phantom. Deliver to the dosimeter a quantity of radiation calculated to give a reading of between 20% and 80% of full scale. Record the reading and reset to zero. Repeat this operation for all radiations listed in Table 2.

Calculate the average response, R, for the three dosimeters for each energy using the following equation:

R = (measured quantity) / (conventionally true quantity)

The ratio $R(E_i)/R(E_{ref})$ gives the response at radiation energy E_i relative to the response at the calibration reference radiation (^{137}Cs).

6.5.5 Angular dependence of response

Requirement— Within the angular interval from 0° to 60° and using the same quantity of the reference radiation, the ratio of the dosimeter indication at angles in this interval relative to normal incidence shall be within ±20% of the values of the ratio of the reading as a function of angle given in Table 2 for ^{137}Cs and ^{60}Co, and within ±50% for ^{241}Am.

Test—For personnel dosimeters, place the dosimeter to be tested at the center of the front face of the PMMA phantom described in 6.5.4 at the measurement point, P, where the field quantity, K_a, has been determined. Area monitoring dosimeters can be tested free in air. Irradiate to give a reading of between 20% and 80% of full scale with the radiation impinging normal to the dosimeter, and record the reading. Successively irradiate and read out the dosimeter using the same quantity of radiation at angles relative to the radiation beam

Copyright © 1997 IEEE. All rights reserved.
Copyright The Institute of Electrical and Electronics Engineers, Inc.
Provided by IHS under license with IEEE
No reproduction or networking permitted without license from IHS
Not for Resale

axis of 15°, 30°, 45°, and 60° using a clockwise rotation, and then repeat the irradiations and readings using a counterclockwise rotation and the same angles.

Calculate the ratios of the dosimeter readings at angles relative to the indication at 0° and compare to the values given in Table 3. If the dosimeter is asymmetric, the test shall be repeated by rotating the mounting on the phantom by 90°, in the plane of the phantom face, relative to the initial mounting.

Table 3—Angular test data

Ratio of reading indicated at angle relative to 0°					
Radiation source	**15°**	**30°**	**45°**	**60°**	**75°**
^{241}Am	0.99	0.97	0.90	0.77	0.51
^{137}Cs	1.0	1.0	0.98	0.95	0.80

6.5.6 Rate dependence

Requirement—The dosimeter shall retain the same response through as broad a range of radiation rates as possible. The deviation in the response should not exceed ±10%.

Test—The test shall be carried out using methods that are consistent with those described in 6.5.2. The average readings of three dosimeters shall be used to compute the percentage change in response at rates chosen. Choose a minimum of two rates corresponding to 20% of full scale in 1 h and three times the full scale range in 1 h. The tests may be performed with the dosimeters either free-in-air or on phantom.

6.5.7 Response to mixed radiations

Requirement—The response of the dosimeter to radiations other than the radiation that the dosimeter is specified to measure shall be stated in the documentation provided with the dosimeter.

Test—The test method used to determine the response shall be stated.

6.6 Effects of environmental conditions on radiation response

6.6.1 Environmental seal integrity (for sealed dosimeters)

Requirement—When the dosimeter is irradiated at a pressure of less than 2.7 kPa (20 mm Hg), it shall respond to within ±10% of a quantity of a reference radiation selected from Table 2 under standard test conditions.

Test—Charge the dosimeter to zero reading and place in a vacuum chamber. Determine the exposure conditions required to produce a midscale dosimeter reading, without vacuum applied, to establish a reference reading. Record the reference reading, recharge the dosimeter, and replace in the vacuum chamber. Reduce the pressure in the chamber to less than 2.7 kPa (20 mm Hg) and maintain for a period of one week. At any time after one week, and still at the reduced pressure, reproduce the exposure conditions for the reference exposure. Return the pressure to standard test conditions, read immediately and record the reading.

Copyright © 1997 IEEE. All rights reserved.

Copyright The Institute of Electrical and Electronics Engineers, Inc.
Provided by IHS under license with IEEE
No reproduction or networking permitted without license from IHS Not for Resale

6.6.2 Effect of temperature during storage

Requirement—The dosimeter shall meet the requirements of this specification after storage at temperature between –10 °C and +50 °C ± 2 °C while under standard test conditions for relative humidity.

Test—Perform tests for electrical leakage, accuracy, and environmental seal described in 6.3.1.10, 6.5.2, and 6.6.1. The results of these tests must successfully pass the specification requirements. The relative intrinsic error obtained shall be used as a reference. Ramp three dosimeters to a temperature of –10 °C ± 2 °C. Hold for 72 h. Return to standard test conditions for temperature and hold for 1 h. Perform the following tests: electrical leakage; accuracy (this reading shall be within ±10% of the reference value mentioned above); and environmental seal. Ramp the dosimeters to a temperature of +50 °C ± 2 °C. Hold for 72 h. Ramp to standard conditions for temperature and hold for 1 h. Perform the following tests: electrical leakage; accuracy (this reading shall be within ±10% of the reference reading); and environmental seal.

6.6.3 Effect of temperature during measurement

Requirement—The dosimeter reading shall indicate a value for a quantity of reference radiation measured at standard test conditions for temperature and humidity that is within ±10% of the value obtained while being exposed to the same quantity of reference radiation while at temperatures between 0 °C and +50 °C (±2 °C) while maintaining standard test conditions for relative humidity.

Test—Charge the dosimeter to read zero and place in an environmental chamber. Expose to an appropriate reference radiation from Table 1 to indicate a midscale reading while at standard test conditions. This shall be the reference reading. Rezero the dosimeter and ramp temperature to 0 °C ± 2 °C and hold for 3 h. Expose the dosimeter to the same quantity of the reference radiation at this temperature and then ramp the dosimeter to standard test conditions, hold for 1 h, and record the reading. Rezero the dosimeter, ramp the dosimeter to +50 °C ± 2 °C, and hold for 3 h. Expose the dosimeter to the reference quantity of radiation at this temperature, then ramp the dosimeter to standard test conditions, hold for 1 h and record this reading.

7. Certification

A certificate should be provided which includes the following information:

- Name and address of the manufacturer
- Type of dosimeter and types of radiation the dosimeter is intended to measure
- Range of dose equivalent and dose equivalent rates (or other appropriate quantities) the dosimeter is intended to measure
- Reference point and reference orientation relative to the radiation source used for calibration
- Location and dimensions of the sensitive volumes of dosimeters
- Areal density (in mg/cm2) and composition of walls or other materials between the radiation source and detector
- Response as a function of radiation energy, for appropriate radiations
- Response as a function of radiation angle of incidence
- Results of relative intrinsic error (accuracy), linearity and lower limit of detection tests
- Indication if dosimeter is airtight or watertight
- Response to unwanted radiation types

Copyright © 1997 IEEE. All rights reserved.
Copyright The Institute of Electrical and Electronics Engineers, Inc.
Provided by IHS under license with IEEE
No reproduction or networking permitted without license from IHS
Not for Resale