Recognized as an
American National Standard (ANSI)

IEEE Std C57.19.03-1996(R2002)

IEEE Standard Requirements, Terminology, and Test Code for Bushings for DC Applications

Sponsor

**IEEE Transformers Committee
of the
Power Engineering Society**

Reaffirmed 10 June 2002

Approved 20 June 1996

IEEE Standards Board

Approved January 1997

IEEE Standards Board

Abstract: This standard applies to outdoor and indoor power apparatus dc bushings of condenser type that have basic impulse insulation levels of 110 kV and above for use as components of oil-filled converter transformers and smoothing reactors, as well as air-to-air dc bushings. This standard defines the special terms used, service conditions, rating, general requirements, electrical insulation characteristics, and test procedure for the bushings for dc application.

Keywords: bushings, dc application

The Institute of Electrical and Electronics Engineers, Inc.
345 East 47th Street, New York, NY 10017-2394, USA

Copyright © 1997 by the Institute of Electrical and Electronics Engineers, Inc.
All rights reserved. Published 1997. Printed in the United States of America

ISBN 1-55937-830-1

No part of this publication may be reproduced in any form, in an electronic retrieval system or otherwise, without the prior written permission of the publisher.

--`,,`-`-`,,`,,`,`,,`---

Copyright The Institute of Electrical and Electronics Engineers, Inc.
Provided by IHS under license with IEEE
No reproduction or networking permitted without license from IHS

Not for Resale

IEEE Standards documents are developed within the IEEE Societies and the Standards Coordinating Committees of the IEEE Standards Board. Members of the committees serve voluntarily and without compensation. They are not necessarily members of the Institute. The standards developed within IEEE represent a consensus of the broad expertise on the subject within the Institute as well as those activities outside of IEEE that have expressed an interest in participating in the development of the standard.

Use of an IEEE Standard is wholly voluntary. The existence of an IEEE Standard does not imply that there are no other ways to produce, test, measure, purchase, market, or provide other goods and services related to the scope of the IEEE Standard. Furthermore, the viewpoint expressed at the time a standard is approved and issued is subject to change brought about through developments in the state of the art and comments received from users of the standard. Every IEEE Standard is subjected to review at least every five years for revision or reaffirmation. When a document is more than five years old and has not been reaffirmed, it is reasonable to conclude that its contents, although still of some value, do not wholly reflect the present state of the art. Users are cautioned to check to determine that they have the latest edition of any IEEE Standard.

Comments for revision of IEEE Standards are welcome from any interested party, regardless of membership affiliation with IEEE. Suggestions for changes in documents should be in the form of a proposed change of text, together with appropriate supporting comments.

Interpretations: Occasionally questions may arise regarding the meaning of portions of standards as they relate to specific applications. When the need for interpretations is brought to the attention of IEEE, the Institute will initiate action to prepare appropriate responses. Since IEEE Standards represent a consensus of all concerned interests, it is important to ensure that any interpretation has also received the concurrence of a balance of interests. For this reason, IEEE and the members of its societies and Standards Coordinating Committees are not able to provide an instant response to interpretation requests except in those cases where the matter has previously received formal consideration.

Comments on standards and requests for interpretations should be addressed to:

Secretary, IEEE Standards Board
445 Hoes Lane
P.O. Box 1331
Piscataway, NJ 08855-1331
USA

Note: Attention is called to the possibility that implementation of this standard may require use of subject matter covered by patent rights. By publication of this standard, no position is taken with respect to the existence or validity of any patent rights in connection therewith. The IEEE shall not be responsible for identifying all patents for which a license may be required by an IEEE standard or for conducting inquiries into the legal validity or scope of those patents that are brought to its attention.

Authorization to photocopy portions of any individual standard for internal or personal use is granted by the Institute of Electrical and Electronics Engineers, Inc., provided that the appropriate fee is paid to Copyright Clearance Center. To arrange for payment of licensing fee, please contact Copyright Clearance Center, Customer Service, 222 Rosewood Drive, Danvers, MA 01923 USA; (508) 750-8400. Permission to photocopy portions of any individual standard for educational classroom use can also be obtained through the Copyright Clearance Center.

Copyright The Institute of Electrical and Electronics Engineers, Inc.
Provided by IHS under license with IEEE
No reproduction or networking permitted without license from IHS
Not for Resale

Introduction

(This introduction is not part of IEEE Std C57.19.03-1996, IEEE Standard Requirements, Terminology, and Test Code for Bushings for DC Applications.)

This document is based on the standard practices for bushings applied to indoor and outdoor, oil-filled, dc power apparatus, and air-to-air, wall, and roof dc bushings. It is the result of joint efforts of professional engineers, manufacturers, and users working together under the auspices of the Institute of Electrical and Electronics Engineers (IEEE). Work on this standard was started in 1988 within the Working Group on Bushings for DC Applications of the Bushing Subcommittee of the IEEE Transformers Committee. The working group decided to address requirements for these bushings in a self-standing document because many problems specific to this type of the bushing were being experienced within the industry and other available standards on bushings were inadequate for this purpose. The main reference for the resulting document was its counterpart for ac bushings, IEEE Std C57.19.00-1991, IEEE Standard General Requirements and Test Procedures for Outdoor Power Apparatus Bushings, with portions adapted from the 1984 issue of IEC Publication 137, Insulating Bushings for Alternating Voltages Above 1000 V. Requirements were also coordinated with the CIGRE Joint Working Group 12/14.10 as well as with the HVDC Converter Transformer and Smoothing Reactor Subcommittee of the IEEE Transformers Committee, which developed standards for these HVDC apparatus during the same time frame.

The Accredited Standards Committee on Transformers, Regulators, and Reactors, C57, that reviewed and approved this document, had the following membership at the time of approval:

P. E. Orehek, *Chair* **vacant,** *Vice Chair*

John A. Gauthier, *Secretary*

Organization Represented	*Name of Representative*
Electric Light and Power Group	E. A. Bertolini
	T. Diamantis
	K. Hanus
	M. C. Mingoia *(Alt.)*
	P. Orehek
	G. Paiva
	J. Sullivan
Institute of Electrical and Electronics Engineers	W. B. Binder
	J. D. Borst
	J. H. Harlow
	J. W. Matthews
	L. Savio
	H. D. Smith *(Alt.)*
	G. H. Vaillancourt
National Electrical Manufacturers Association	G. D. Coulter
	P. Dewever *(Alt.)*
	J. Douglas
	S. Endersbe
	A. Ghafourian
	P. Hopkinson
	K. R. Linsley
	R. L. Plaster *(Alt.)*
	H. Robin
Tennessee Valley Authority	F. Lewis
Underwriters Laboratories, Inc	M. Schacker
US Department of Agriculture, REA	J. Bohlk
US Department of Energy, Western Area Power Administration	Kenneth C. Wolohon
US Department of Interior, Bureau of Reclamation	R. Chadwick
US Department of the Navy, Civil Engineering Corps	H. P. Stickley

--`,-`-`,,`,,`,`,,`---

Copyright The Institute of Electrical and Electronics Engineers, Inc.
Provided by IHS under license with IEEE
No reproduction or networking permitted without license from IHS
Not for Resale

The Working Group on Bushings for DC Applications had the following membership at the time that this standard was developed and approved:

Olof Heyman, *Chair* **Devki N. Sharma,** *Secretary*

P. Bertolotto
F. Costa
V. Dahinden
F. Elliott
J. Foldi
J. Frost
D. A. Gillies
A. J. Jonnatti
S. Lindgren
J. C. Riboud
F. Richens
H. Ruevekamp
P. Singh
W. W. Stein
L. Wagenaar
W. A. Young

The following persons were on the balloting committee:

Edward J. Adolphson
D. J. Allan
Raymond Allustiarti
Michael S. Altman
Glenn Andersen
J. C. Arnold
J. Arteaga
J. Aubin
Donald E. Ayers
Roy A. Bancroft
Ron L. Barker
David A. Barnard
E. Bertolini
Wallace B. Binder
J. H. Bishop
W. E. Boettger
J. V. Bonucchi
John D. Borst
C. V. Brown
M. Cambre
D. J. Cash
D. Chu
Thomas F. Clark
J. L. Corkran
Dan W. Crofts
John C. Crouse
V. Dahinden
John N. Davis
R. C. Degeneff
T. Diamantis
Larry E. Dix
R. F. Dudley
John A. Ebert
K. Edwards
Fred E. Elliott
D. J. Fallon
P. T. Feghali
Jeffrey A. Fleeman
Michael A. Franchek
Jerry M. Frank
Dudley L. Galloway
A. A. Ghafourian
Donald A. Gillies
R. S. Girgis
R. D. Graham
Robert L. Grubb
R. L. Grunert
F. J. Gryszkiewicz
Michael E. Haas
Geoff H. Hall
E. Hanique
N. Wayne Hansen
Kenneth S. Hanus
James H. Harlow
Frank W. Heinrichs
William R. Henning
K. R. Highton
Peter J. Hoefler
Philip J. Hopkinson
J .W. Howard
Edgar Howells
J. Hunt
Y. Peter Iijima
C. W. Johnson
Anthony J. Jonnatti
R. D. Jordan
E. Kallaur
J. J. Kelly
Sheldon P. Kennedy
William N. Kennedy
James P. Kinney
Alexander D. Kline
J. G. Lackey
Michael Y. Lau
J. P. Lazar
Frank A. Lewis
Harold F. Light
S. R. Lindgren
Larry A. Lowdermilk
Donald L. Lowe
Richard I. Lowe
David S. Lyon
Joseph Ma
William A. Maguire
K.T. Massouda
John W. Matthews
A. D. McCain
Jack W. McGill
Charles J. McMillen
W. J. McNutt
Charles P. McShane
Ross McTaggart
Sam P. Mehta
C. Kent Miller
Matthew C. Mingoia
Russell E. Minkwitz
Michael I. Mitelman
Harold R. Moore
W. E. Morehart
D. H. Mulkey
C. R. Murray
R. J. Musil
William H. Mutschler
Carl G. Niemann
E. T. Norton
Paul E. Orehek
Gerald A. Paiva
Klaus Papp
Bipin K. Patel
Wesley F. Patterson, Jr.
J. M. Patton
Paulette A. Payne
Larry C. Pearson
Thomas J. Pekarek
Dan D. Perco
Mark D. Perkins
V. Q. Pham
Linden W. Pierce
R. L. Plaster
Donald W. Platts
Bertrand Poulin
Jeewan L. Puri
Vadim Raff
J. D. Ramboz
Charles T. Raymond
Pierre Riffon
Peter G. Risse
S. M. A. Rizvi
Chris A. Robbins
R. B. Robertson
A. L. Robinson
J. R. Rossetti
G. W. Rowe
Mahesh P. Sampat
Leo J. Savio
William E. Saxon
Robert W. Scheu
Devki N. Sharma
V. Shenoy
Hyeong J. Sim
J. W. Smith

Copyright The Institute of Electrical and Electronics Engineers, Inc.
Provided by IHS under license with IEEE
No reproduction or networking permitted without license from IHS
Not for Resale

J. E. Smith
J. E. Smith
Stephen D. Smith
Ronald J. Stahara
W. W. Stein
Ron W. Soner
John C. Sullivan
David Sundin
Louis A. Tauber
James B. Templeton
V. Thenappan
James A. Thompson
R. W. Thompson
Thomas P. Traub
E. R. Trummer
Georges H. Vaillancourt
Robert A .Veitch
Loren B.Wagenaar
Barry H. Ward
R. J. Whearty
D. W. Whitley
A. L. Wilks
Charles W. Williams

When the IEEE Standards Board approved this standard on 20 June 1996, it had the following membership:

Donald C. Loughry, *Chair* **Richard J. Holleman,** *Vice Chair*
Andrew G. Salem, *Secretary*

Gilles A. Baril
Clyde R. Camp
Joseph A. Cannatelli
Stephen L. Diamond
Harold E. Epstein
Donald C. Fleckenstein
Jay Forster*
Donald N. Heirman
Ben C. Johnson
E. G. "Al" Kiener
Joseph L. Koepfinger*
Stephen R. Lambert
Lawrence V. McCall
L. Bruce McClung
Marco W. Migliaro
Mary Lou Padgett
John W. Pope
Jose R. Ramos
Arthur K. Reilly
Ronald H. Reimer
Gary S. Robinson
Ingo Rüsch
John S. Ryan
Chee Kiow Tan
Leonard L. Tripp
Howard L. Wolfman

*Member Emeritus

Also included are the following nonvoting IEEE Standards Board liaisons:

Satish K. Aggarwal
Alan H. Cookson
Chester C. Taylor

Rochelle L. Stern
IEEE Standards Project Editor

Copyright The Institute of Electrical and Electronics Engineers, Inc.
Provided by IHS under license with IEEE
No reproduction or networking permitted without license from IHS
Not for Resale

Contents

CLAUSE PAGE

1. Overview 1

1.1 Scope 1
1.2 Purpose 1

2. References 1

3. Definitions 2

4. Service conditions 6

4.1 Usual service conditions 6
4.2 Unusual service conditions 6

5. Rating 7

5.1 Rated maximum line-to-ground voltage 7
5.2 Rated frequency 8
5.3 Rated dielectric strength 8
5.4 Rated current 9

6. General requirements 10

6.1 Electrical requirements 10
6.2 Mechanical requirements 11
6.3 Nameplate markings 12
6.4 Specific creepage distance 12

7. Test procedure 12

7.1 Test conditions 12
7.2 Design tests 13
7.3 Routine tests 21
7.4 Special tests 23

Copyright The Institute of Electrical and Electronics Engineers, Inc.
Provided by IHS under license with IEEE
No reproduction or networking permitted without license from IHS
Not for Resale

IEEE Standard Requirements, Terminology, and Test Code Bushings for DC Applications

1. Overview

1.1 Scope

This standard applies to outdoor and indoor power apparatus dc bushings of condenser type that have basic impulse insulation levels of 110 kV and above for use as components of oil-filled converter transformers and smoothing reactors, as well as air-to-air dc bushings. This standard does not apply to the following:

a) High-voltage cable terminations (potheads)
b) Bushings for instrument transformers
c) Bushings for test transformers
d) Bushings in which the internal insulation is provided by a gas
e) Bushings applied with gaseous insulation (other than air at atmospheric pressure) external to the bushing
f) Bushings for distribution class transformers

1.2 Purpose

This standard defines the special terms used, service conditions, rating, general requirements, electrical insulation characteristics, and test procedure for the bushings for dc application.

2. References

This standard shall be used in conjunction with the following publications. When the following standards are superseded by a revision, the revision shall *not* apply.

ANSI C84.1-1982, Electric Power Systems and Equipment—Voltage Ratings (60 Hz).[1]

[1]ANSI publications are available from the Sales Department, American National Standards Institute, 11 West 42nd Street, 13th Floor, New York, NY 10036, USA.

Copyright The Institute of Electrical and Electronics Engineers, Inc.
Provided by IHS under license with IEEE
No reproduction or networking permitted without license from IHS
Not for Resale

ANSI C92.2-1981, Power Systems—Preferred Voltage Ratings for Alternating-Current Electrical Systems and Equipment Operating at Voltages above 230 kV Nominal (revision and redesignation of ANSI C92.2-1987).

IEC 137 (1984), Insulating bushings for alternating voltages above 1000 V.[2]

IEC 270 (1981), Partial discharge measurements.

IEC 60-1 (1989), High-voltage test techniques. Part 1: General definitions and test requirements.

IEEE Std 4-1995, IEEE Standard Techniques for High-Voltage Testing (ANSI).[3]

IEEE Std 100-1992, IEEE Dictionary of Electrical and Electronics Terms (ANSI).

IEEE Std 1313-1993, IEEE Standard for Power Systems—Insulation Coordination (formerly C92.1) (ANSI).

IEEE Std C57.19.100-1995, IEEE Guide for Application of Power Apparatus Bushings (ANSI).

IEEE Std C57.19.00-1991, IEEE General Requirements and Test Procedures for Outdoor Apparatus Bushings (ANSI).

IEEE Std C57.19.01-1991, IEEE Standard Performance Characteristics and Dimensions for Outdoor Apparatus Bushings (ANSI).

IEEE Std C57.113-1991, IEEE Guide for Partial Discharge Measurement in Liquid-Filled Power Transformers and Shunt Reactors (ANSI).

3. Definitions

For terms not specifically defined in this standard, see IEEE Std 100-1992.[4]

3.1 ambient temperature: The temperature of the surrounding air that comes in contact with the bushing and device or equipment in which the bushing is mounted.

3.2 arcing distance: The shortest external tight-string distance measured over the insulating envelope between the metal parts at line potential and ground. Formerly referred to as *striking distance* or *flashover distance*.

3.3 absorption current: Current resulting from charge absorbed in the dielectric as a result of polarization.

3.4 bushing: An insulating structure, including a through conductor or providing a central passage for such a conductor, with provision for mounting on a barrier, conducting or otherwise, for the purpose of insulating the conductor from the barrier and conducting current from one side of the barrier to the other.

---

[2]IEC publications are available from IEC Sales Department, Case Postale 131, 3, rue de Varembé, CH-1211, Genève 20, Switzerland/Suisse. IEC publications are also available in the United States from the Sales Department, American National Standards Institute, 11 West 42nd Street, 13th Floor, New York, NY 10036, USA.

[3]IEEE publications are available from the Institute of Electrical and Electronics Engineers, 445 Hoes Lane, P.O. Box 1331, Piscataway, NJ 08855-1331, USA.

[4]Information on references can be found in clause 2.

Copyright The Institute of Electrical and Electronics Engineers, Inc.
Provided by IHS under license with IEEE
No reproduction or networking permitted without license from IHS Not for Resale

3.4.1 bushing condenser: The component within a capacitive graded bushing in which the grading element is embedded in the major insulation.

3.4.2 capacitance graded bushing: A bushing in which metallic or non-metallic conducting layers are arranged within the insulating material for the purpose of controlling the distribution of the electric field of the bushing, both axially and radially.

3.4.3 completely immersed bushing: A bushing in which both ends are intended to be immersed in an insulating medium such as oil or gas.

3.4.4 oil-impregnated paper-insulated bushing: A bushing in which the internal insulation consists of a condenser wound from paper and subsequently impregnated with oil. The condenser is contained in an insulating envelope, the space between the condenser and the insulating envelope being filled with oil.

3.4.5 outdoor bushing: A bushing in which both ends are in ambient air and exposed to external atmospheric conditions.

3.4.6 outdoor-immersed bushing: A bushing in which one end is in ambient air and exposed to external atmospheric condition and the other end is immersed in an insulating medium such as oil or gas.

3.4.7 outdoor-indoor bushing: A bushing in which both ends are in ambient air but one end is intended to be exposed to external atmospheric conditions and the other end is intended not to be so exposed.

3.4.8 sealed bushing: An oil-filled bushing in which the oil is contained within the bushing and not allowed to mix with the oil of the apparatus on which it is used.

3.4.9 self-filling bushing: An oil-filled bushing in which the oil is allowed to circulate freely between the inside of the bushing and the apparatus on which it is used.

3.4.10 tilted bushing: A bushing intended to be mounted at an angle of 20° to 70° from the vertical.

3.4.11 vertical bushing: A bushing intended to be mounted vertically or at an angle not exceeding 20° from the vertical.

3.4.12 wall (roof) bushing: A bushing intended to be mounted on the wall (roof) of a building such as a converter valve hall.

NOTE—A wall or a roof bushing may be an outdoor, outdoor-indoor, or indoor bushing.

3.5 bushing test tap: A connection to one of the conducting layers of a capacitance graded bushing for measurement of partial discharge, power factor, and capacitance values.

3.6 bushing voltage tap: A connection to one of the conducting layers of a capacitance graded bushing providing a capacitance voltage divider.

NOTE—Additional equipment can be designed, connected to this tap, and calibrated to indicate the voltage applied to the bushing. This tap can also be used for measurement of partial discharge, power factor, and capacitance values.

3.7 capacitance (of bushing):

a) The main capacitance, C_1, of a bushing is the capacitance between the high-voltage conductor and the voltage tap or the test tap.
b) The tap capacitance, C_2, of a capacitance graded bushing is the capacitance between the voltage tap and mounting flange (ground).

Copyright The Institute of Electrical and Electronics Engineers, Inc.
Provided by IHS under license with IEEE
No reproduction or networking permitted without license from IHS
Not for Resale

c) The capacitance, *C*, of a bushing without a voltage or test tap is the capacitance between the high-voltage conductor and the mounting flange (ground).

3.8 charging (capacitance) current: Current resulting from charge absorbed by the capacitor formed by the capacitance of the bushing.

3.9 corona: A luminous discharge due to ionization of the air surrounding a conductor caused by a voltage gradient exceeding a certain critical value.

3.10 creep distance: The shortest distance measured along the external contour of the insulating envelope that separates the metal part operating at line voltage and the metal flange at ground potential.

3.11 dc bushing: A bushing carrying a dc stress, i.e., bushings applied to the valve winding side of a converter transformer, bushing applied to a dc smoothing reactor or a bushing applied to a dc converter valve.

3.11.1 bushings for combined voltage application: A bushing applied to the valve winding side of a converter transformer or a bushing applied to the converter transformer side of a dc converter valve. This bushing is exposed to a large ac stress superimposed on a dc bias.

3.11.2 bushings for pure dc application: A bushing applied to the dc side of a dc converter valve or a bushing applied on a dc smoothing reactor. This bushing is exposed to dc stress with a small ac ripple.

3.12 dissipation factor: The tangent of the dielectric loss angle.

NOTE—For small values of dielectric loss, the dissipation factor is virtually equal to the insulation power factor.

3.13 draw-lead bushing: A bushing that will allow the use of a draw-lead conductor.

3.14 draw-lead conductor: A cable or solid conductor that has one end connected to the transformer or reactor winding and the other end drawn through the central tube of the bushing and connected to the top of the bushing.

3.15 horizontal bushing: A bushing intended to be mounted horizontally at an angle 70° to 90° from the vertical.

3.16 indoor bushing: A bushing in which both ends are in ambient air but are not exposed to external atmospheric conditions.

NOTE—An outdoor bushing may be used indoors but an indoor bushing may not be used outdoors.

3.17 indoor-immersed bushing: A bushing in which one end is in ambient air but not exposed to external atmospheric conditions and the other end is immersed in an insulating medium such as oil or gas.

3.18 insulating envelope: An envelope of inorganic or organic material such as a ceramic or cast resin placed around the energized conductor and insulating material.

3.19 insulation power factor: The ratio of the power dissipated in the insulation, in watts, to the product of the effective voltage and current in volt-amperes, when tested under a sinusoidal voltage and prescribed conditions.

NOTE—The insulation power factor is equal to the cosine of the phase angle between the voltage and the resulting current when both the voltage and current are sinusoidal.

Copyright The Institute of Electrical and Electronics Engineers, Inc.
Provided by IHS under license with IEEE
No reproduction or networking permitted without license from IHS Not for Resale

3.20 internal insulation: Insulating material provided in a radial direction around the energized conductor in order to insulate it from the ground potential.

3.21 leakage (conduction) current: Current resulting from the resistance of the dielectric insulation and surface leakage.

3.22 major insulation: The insulating material providing the dielectric, which is necessary to maintain proper isolation between the energized conductor and ground potential. It consists of internal insulation and the insulating envelope(s).

3.23 oil: Mineral oil as described in ASTM D3487-88 (1993).

3.24 partial discharge: A discharge that does not completely bridge the insulation between electrodes.

NOTE—The term *corona* is preferably reserved for partial discharges in air around a conductor, but not within the bushing assembly.

3.25 polarity: Polarity of the dc voltage with respect to ground, e.g., positive or negative.

3.26 polarity reversal: Change of voltage polarity from positive to negative or from negative to positive polarity.

3.27 radio-influence voltage (RIV): A high-frequency voltage generated as a result of partial discharge or corona, which may be propagated by conduction, induction, radiation, or a combined effect of all three.

3.28 resin-impregnated paper-insulated bushing: A bushing in which the internal insulation consists of a condenser wound from untreated paper and subsequently impregnated with a curable resin.

NOTE—A resin-impregnated paper bushing may be provided with an insulating envelope, in which case the intervening space may be filled with another insulating medium.

3.29 specific creepage distance: For bushings for pure dc application, the creep distance divided by the rated voltage for the dc system where the bushing is intended to be used.

For bushings for combined voltage application, the specific creepage distance is the creep distance divided by

$$Z \times V_d$$

where

Z is the number of six pulse bridges in series.
V_d is the dc rated voltage per valve bridge.

Copyright The Institute of Electrical and Electronics Engineers, Inc.
Provided by IHS under license with IEEE
No reproduction or networking permitted without license from IHS
Not for Resale

4. Service conditions

4.1 Usual service conditions

Bushings conforming to this standard shall be suitable for operation at their ratings, provided

a) The temperature of the ambient air is within the following (see 4.2):
   Maximum: 40 °C
   Maximum daily mean: 30 °C
   Minimum: –30 °C
b) The altitude does not exceed 1000 m (3300 ft)
c) The temperature rise of the transformer insulating oil in which one end of the bushing is immersed, and the bushing mounting surface does not exceed 65 °C above the ambient temperature.
d) The external terminal and bus connections, when operated alone at rated current, do not exceed 30 °C rise above ambient.
e) No moisture condensation is present on the outer surface of the indoor part of the outdoor-indoor bushing, indoor bushing, and outdoor-immersed bushing.

4.2 Unusual service conditions

It is recognized that an ambient temperature limit of 40 °C may not be high enough for bushings in the valve hall. In such instances, the user should specify expected ambient temperature for the valve hall bushings.

Bushings complying with this standard may be applied at higher or lower ambient temperatures or at higher altitudes than specified in 4.1, but their performance may be affected. See IEEE Std C57.19.100-1995 for general guidance.

4.2.1 Application at altitudes greater than 1000 m (3300 ft)

The dielectric strength of bushings, which depends in whole or in part upon air for insulation, decreases as the altitude increases due to the effect of decreased air density. When specified, bushings shall be designed with larger arcing distance using the correction factors of table 1 to obtain adequate air dielectric strength at altitudes above 1000 m (3300 ft). The minimum insulation necessary at the required altitude can be obtained by dividing the standard insulation at 1000 m (3300 ft) by the appropriate correction factor from table 1.

4.2.2 Other conditions that may affect design, testing, and application

Where other unusual conditions exist, they shall be brought to the attention of those responsible for the design, testing, and application of the equipment. Examples of such conditions are

a) Damaging fumes or vapors; excessive abrasive or conducting dust; explosive mixtures of dust or gases; steam; salt spray; icing; etc.
b) Excessive tilting
c) Abnormal vibration or shocks
d) Unusual transportation or storage conditions
e) Unusual space limitations
f) Unusual temperature applications
g) Proximity of installation adapters and tank walls
h) Proximity of building walls to wall bushings

Copyright The Institute of Electrical and Electronics Engineers, Inc.
Provided by IHS under license with IEEE
No reproduction or networking permitted without license from IHS Not for Resale

Table 1—Dielectric–strength correction–factors for altitudes greater than 1000 m (3300 ft)

Altitude		Altitude correction factor for dielectric strength
(ft)	(m)	
3300	1000	1.00
4000	1200	0.98
5000	1500	0.95
6000	1800	0.92
7000	2100	0.89
8000	2400	0.86
9000	2700	0.83
10 000	3000	0.80
12 000	3600	0.75
14 000	4200	0.70
15 000	4500	0.67

NOTE—An altitude of 4500 m (15 000 ft) is considered a maximum for bushings conforming to this standard.

5. Rating

A designation of performance characteristics based upon definite conditions shall include the following where applicable:

a) Rated maximum line-to-ground voltage
b) Rated frequency
c) Rated dielectric strength
d) Rated continuous current

5.1 Rated maximum line-to-ground voltage

5.1.1 Rated voltage

The rated voltage of a bushing is the voltage of the dc system at which the bushing is designed to operate under usual service conditions.

5.1.2 Continuous dc voltage

The continuous dc voltage is the maximum continuous dc voltage the bushing is required to withstand under usual service conditions.

Copyright The Institute of Electrical and Electronics Engineers, Inc.
Provided by IHS under license with IEEE
No reproduction or networking permitted without license from IHS
Not for Resale

5.1.3 Peak voltage

The peak voltage is the maximum combined dc voltage plus ac peak voltage the bushing is required to withstand under usual service conditions. This voltage includes a continuous dc component and superimposed ac component (ripple or converter transformer valve winding voltage).

5.2 Rated frequency

Rated frequency is the frequency of the ac system to which the bushing is connected. Rated frequency for bushings used for pure dc application is “dc”.

5.3 Rated dielectric strength

The rated dielectric strength of a bushing is expressed in terms of specified values of ac, dc, and impulse voltages. The values chosen for a bushing shall be such that the lightning impulse, chopped wave impulse, and the switching impulse insulation levels include a suitable margin in excess of the dielectric stresses to which the bushing will be subjected in actual service.

The BIL and BSL values should be chosen from the recommended values listed in IEEE Std 1313-1993. The chopped wave insulation level shall be determined by multiplying the BIL with 1.15.

5.3.1 Rated low-frequency test voltage

The test for a bushing is the ac test voltage, which a new bushing shall be capable of withstanding for 1 min when tested in dry condition as specified in 7.3.3.

5.3.2 Rated full-wave lightning-impulse voltage

The rated full-wave lightning-impulse voltage is the crest value of a standard 1.2 × 50 μs impulse voltage wave, which a new bushing shall be capable of withstanding when tested under the conditions specified in 7.2.2.

5.3.3 Rated chopped-wave lightning-impulse voltage

The rated chopped-wave lightning-impulse voltage is the crest value of a standard 1.2 × 50 μs impulse voltage, which a new bushing shall be capable of withstanding for a specified time from the start of the wave at virtual time zero until flashover of a rod gap or coordinating gap occurs when tested under the conditions specified in 7.2.3.

5.3.4 Rated switching-impulse voltage

5.3.4.1 Rated wet switching-impulse voltage

The rated wet switching-impulse voltage is the crest value of a 250 × 2500 μs switching-impulse voltage wave, which a new bushing shall be capable of withstanding when tested under the conditions specified in 7.2.4.1.

5.3.4.2 Rated dry switching-impulse voltage

The rated dry switching-impulse voltage is the crest value of a 250 × 2500 μs switching-impulse voltage wave, which a new bushing shall be capable of withstanding when tested under the conditions specified in 7.2.4.2.

Copyright The Institute of Electrical and Electronics Engineers, Inc.
Provided by IHS under license with IEEE
No reproduction or networking permitted without license from IHS Not for Resale

5.3.5 Rated dc test voltage

The rated dc test voltage is the voltage that a new bushing shall be capable of withstanding when tested under the condition specified in 7.2.5.

5.4 Rated current

The definition of rated current depends on the bushing application.

If the bushing is one for pure dc application, the rating is defined in 5.4.1. If the bushing is one for combined voltage application, the rating is defined in 5.4.2.

5.4.1 DC applications

In these applications, the bushing conducts dc current and voltage with a small superimposed ac ripple.

5.4.1.1 Rated continuous dc current

The rated continuous dc current is the maximum continuous direct current the bushing is required to carry under usual service conditions.

5.4.1.2 DC overload current

The bushing dc overload current is the maximum direct current above the continuous rating the bushing is intended to carry for a stated short time. The current magnitude, duration, and frequency of occurrence shall be specified based on system performance requirements.

5.4.1.3 Rated momentary (short-time) dc current

The rated momentary short-time dc current is the peak current that the bushing is required to withstand mechanically and thermally for a stated short time. Duration of the short-time in milliseconds shall be specified by the purchaser.

5.4.2 Combined voltage applications

In these applications, the bushing conducts a combined ac and dc current.

5.4.2.1 Rated continuous ac current

The rated continuous ac current is the rms equivalent of the actual operating current wave shape based on the dc rated load commutated with zero commutating angle.

5.4.2.2 AC overload current

The ac overload current is the maximum alternating-current above the continuous rating that the bushing is required to carry for a stated short time. The current magnitude, duration, and frequency of occurrence shall be specified based on system performance requirements.

5.4.2.3 Rated momentary (short-time) current

The rated momentary short-time current is the current flowing through the bushing at the major peak of the maximum cycle as determined from the envelope of the current wave. This current is expressed as the root-

Copyright The Institute of Electrical and Electronics Engineers, Inc.
Provided by IHS under license with IEEE
No reproduction or networking permitted without license from IHS
Not for Resale

mean-square value including the dc component. Duration of the momentary current shall be 3 s unless otherwise specified.

5.4.3 Thermal basis of rating

The hottest-spot temperature rise of the current-carrying parts in contact with the insulation and the temperature of noncurrent-carrying metal parts in contact with the insulation shall not exceed the following temperature limits when

a) For an apparatus bushing, one end is completely immersed in oil (within 2 in [5 cm] of the mounting flange) having a rise of 65 °C over the maximum daily mean ambient temperature (30 °C) and the bushing is carrying the rated current
b) For a wall bushing or a roof bushing, both ends are exposed to a maximum daily mean ambient temperature (30 °C) and the bushing is carrying the rated current.

Temperature limits		
Insulation temperature index	**Hottest-spot temperature rise (°C)**	**Maximum temperature (°C)**
105	75	105
120	90	120

5.4.4 Draw-lead conductor applications

For draw-lead conductor application, the central tube of the bushing does not carry any current and therefore, the current rating of the draw-lead conductor is not associated with the bushing current rating. The current rating for this type of application is limited by the thermal characteristics of the draw-lead conductor used together with the thermal characteristics of the bushing.

These characteristics will vary with the size of the draw-lead conductor, the inside diameter of the bushings central tube, the overall length of the bushing, and the insulation on the draw-lead conductor.

Recommendations for the draw-lead application should be obtained from the bushing manufacturer.

6. General requirements

This standard includes a number of the following general requirements that are applicable to certain ratings of outdoor power apparatus bushings. Specific values for these requirements are listed under the corresponding headings.

6.1 Electrical requirements

a) Voltage withstand tests (see 7.2.1 through 7.2.5; 7.3.3 through 7.3.7)
b) Partial discharge (see table 3)
c) Power factor and capacitance (see table 4)
d) Creep distance (see 6.4)

--`,,`-`-`,,`,,`,`,,`---
Copyright The Institute of Electrical and Electronics Engineers, Inc.
Provided by IHS under license with IEEE
No reproduction or networking permitted without license from IHS Not for Resale

6.2 Mechanical requirements

a) Dimensions

b) Cantilever strength (see table 5)

c) Internal pressure and vacuum (see 7.2.7.1)

d) Apparatus bushings shall be designed to withstand full vacuum when mounted in the apparatus tank

e) Draw lead bushing cap pressure

f) Bushing voltage tap. All bushings 450 kV BIL and above shall be provided with a bushing voltage tap. These taps shall be normally grounded as shown in figure 1.

g) Bushing test tap. All capacitance graded bushings with BIL below 450 kV shall be provided with a bushing test tap. This tap is normally grounded and is intended for measurement of power factor, capacitance from conductor to tap, and partial discharge. Since the capacitance from tap to ground is not controlled, the tap is not intended for use as a voltage divider during normal operation.

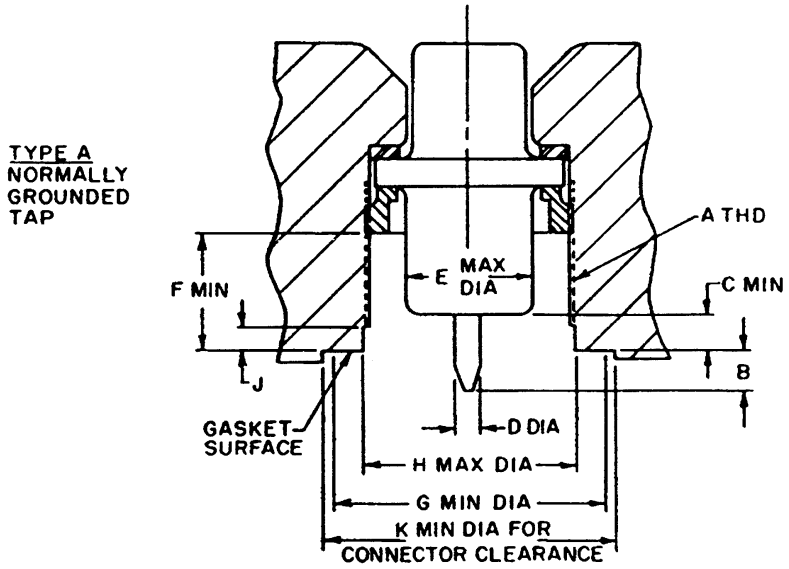

A	2.250-12 UNF 2A	F	1 in (25.4 mm)
B	0.375 in min–0.750 in max (9.525 mm min–19.050 mm max)	G	2.940 in (74.676 mm)
C	0.310 in (7.874 mm)	H	2.266 in ± 0.003 in (57.556 mm ± 0.076 mm)
D	0.313 in ± 0.003 in (7.950 mm ± 0.076 mm)	J	0.125 in min–0.290 in max (3.175 mm min–7.366 mm max)
E	1.750 in (44.45 mm)	K	3.033 in (77.038 mm)

Figure 1—Bushing potential tap dimensions

Copyright The Institute of Electrical and Electronics Engineers, Inc.
Provided by IHS under license with IEEE
No reproduction or networking permitted without license from IHS
Not for Resale

6.3 Nameplate markings

The following information where applicable shall appear on all bushing nameplates, except on small 110 kV BIL bushings, which shall be marked in a conspicuous place with a manufacturer's specific identification.

a) Manufacturer's name, identification number, type, year of manufacture, and serial number
b) Continuous dc voltage (for bushings for pure dc application, see 5.1.2)
c) Peak voltage (for bushings for combined voltage application, see 5.1.3)
d) Continuous dc current (for bushings for pure dc application, see 5.4.1.1)
e) Continuous ac current (for bushings for combined voltage application, see 5.4.2.1)
f) Rated full-wave lightning impulse withstand voltage (BIL)
g) Capacitance, C_1 and C_2, on all bushings equipped with voltage taps, and C_1 on all bushings equipped with test taps
h) Power factor measured from conductor to tap, where applicable, at 10 kV or above and referred to 20 °C by the ungrounded specimen test (UST)
i) Length of bushing below mounting surface (L) (not applicable for wall bushings)

6.4 Specific creepage distance

The minimum specific creepage distance for indoor bushings shall be 17 mm/kV. Requirements for outdoor bushings are under consideration.

7. Test procedure

This test procedure summarizes the various tests that are made on bushings for dc application, describes accepted methods used in making these tests, and specifies the tests that will demonstrate ratings in this standard. It does not preclude the use of other equivalent or more effective methods of demonstrating the ratings. These tests are divided into following classifications:

a) Design tests
b) Routine tests
c) Special tests

7.1 Test conditions

7.1.1 General requirements

Bushings shall be prepared for dielectric tests, and measurements and corrections for conditions shall be made in accordance with appropriate clauses of this standard. The following shall be in accordance with applicable clauses in IEEE Std 4-1995:

a) Definitions of tests (clause 3)
b) General test procedures (clauses 4, 5.2, 6.2, 7.8, 8.5)
c) Characteristics and tolerances of waveshapes (clauses 7.1–7.5, 8.1, 8.2)
d) Method of measurement (clauses 7.7, 8.4, 12, 13, 17)
e) Standard atmospheric and precipitation conditions (clauses 14, 15, 16)
f) Rate and duration of voltage application for low-frequency tests (clause 6)

7.1.2 Test specimen requirements

The test specimen shall comply with the following requirements:

Copyright The Institute of Electrical and Electronics Engineers, Inc.
Provided by IHS under license with IEEE
No reproduction or networking permitted without license from IHS Not for Resale

a) Except for mechanical tests, bushings shall be mounted on a supporting structure and in the position approximating that for which they were designed and with their ends in the media of the type in which they are intended to operate.
b) Bushings shall be completely assembled with all elements normally considered essential parts of the bushings. Connectors not provided as part of the bushing are not part of the test.
c) The bushing shall be dry and clean.
d) For partial discharge tests, suitable external shielding may be applied to eliminate external corona on the air end terminal(s).
e) DC tests on apparatus bushings shall be done with external insulation and ground planes surrounding the lower end of the bushing in a position as similar as possible to that in the intended service condition.
f) DC tests on wall bushings shall be done with wall ground plane and mounting arrangements as similar as possible to that in the intended service condition.

7.1.3 Test conditions

7.1.3.1 Air temperature

The ambient temperature at the time of test shall be between 10 °C and 40 °C (50 °F and 104 °F).

7.1.3.2 Humidity

The absolute humidity at the time of test shall be between 7.0 g/m^3 and 15.0 g/m^3. Refer to figure 35 of IEEE Std 4-1995 for determination of the absolute humidity.

7.1.4 Correction factors

When actual test conditions vary from standard test conditions, as specified in IEEE Std 4-1995, correction factor k_1 (for variation in relative air density) and k_2 (for variation in humidity) may be applied to correct the applied withstand voltages to withstand voltages at standard conditions.

Correction factors shall be determined in accordance with clause 16, Atmospheric Correction Factors of IEEE Std 4-1995 or clause 11, Atmospheric Conditions of IEC 60-1 (1989), and shall be applied as follows:

a) Dry 1 min low-frequency withstand tests—No corrections
b) Full-wave lightning-impulse withstand tests—Correction factor $k_1 \times k_2$ may be applied. When the corrected test voltage is lower than the specified test voltage, the correction shall be applied to the polarity where the external withstand voltage is the most critical. The opposite polarity shall be tested with at least the specified uncorrected voltage.
When the corrected test voltage is higher than the specified test voltage, the corrected test voltage shall be used on both polarities. If the correction multiplier exceeds 1.05, the test shall continue only by the mutual consent of the purchaser and the supplier.
c) Chopped-waved lightning impulse withstand test—No correction.
d) Wet switching-impulse withstand tests—Correction factor k_1 may be applied.
e) DC voltage withstand test—Correction factors $k_1 \times k_2$ may be applied.
f) Polarity reversal test—No correction
g) Temperature correction factor for the power factor—If the temperature of the condenser body is suspected to deviate more than ±3 °C from the reference temperature (+20 °C), a correction factor for the power factor shall be provided by the manufacturer.

7.2 Design tests

Design tests are those made to determine the adequacy of the design of a particular type, style, or model of power apparatus bushing; to meet its assigned ratings, to operate satisfactorily under usual service condi-

Copyright The Institute of Electrical and Electronics Engineers, Inc.
Provided by IHS under license with IEEE
No reproduction or networking permitted without license from IHS
Not for Resale

tions or under special conditions if specified, and to demonstrate compliance with appropriate standards of the industry.

Design tests are made only on representative bushings to substantiate the ratings assigned to all other bushings of the same design. These tests are not intended to be made as a part of normal production. The applicable portions of these design tests may also be used to evaluate modifications of a previous design and to assure that performance has not been adversely affected. Test data from previous designs may be used for current designs where appropriate. Once made, the tests need not be repeated unless the design is changed so as to modify performance.

During these tests, the bushing will be stressed higher than usually encountered in service and the bushings must withstand these tests without evidence of partial or complete failure. Hidden damage that may occur during the dielectric withstand voltage tests can usually be detected by comparing values of certain electrical characteristics before and after the withstand voltage tests. The characteristics usually measured are capacitance, power factor, and apparent charge. These diagnostic tests may be associated with individual withstand tests or a group of withstand tests. The criteria for acceptance is given in tables 3 and 4.

Design tests are listed in table 2.

7.2.1 Low-frequency withstand voltage with partial discharge measurements

The test shall be performed as specified in 7.3.3 except that the voltage in step c) shall be applied for 1 h. Partial discharge measurements shall be made at 5 min intervals.

7.2.2 Full-wave and chopped wave lightning-impulse withstand voltage

Both positive and negative standard 1.2 × 50 μs waves as described in IEEE Std 4-1995 shall be used. Procedures shown in IEEE Std 4-1995 under 7.8.2.2, Withstand voltage test—procedure B, shall be used, plus five more chopped wave impulses of negative polarity. The test voltage shall be as specified by the user.

The test shall be done in the following sequence:

1) Fifteen (15) full-wave impulses of positive polarity; followed by
2) One (1) full-wave impulse of negative polarity; followed by
3) Five (5) chopped-wave impulses of negative polarity; followed by
4) Fourteen (14) full-wave impulses of negative polarity

The time to chopping shall be 3 μs. The peak-voltage level shall be 115% of the full-wave value.

Copyright The Institute of Electrical and Electronics Engineers, Inc.
Provided by IHS under license with IEEE
No reproduction or networking permitted without license from IHS Not for Resale

Table 2—Routine and design tests for dc bushings

Clause number	Tests	Routine	Design	Special
7.2.1	Low-frequency dry		X	
7.3.3	Low-frequency dry	X		
7.2.2	Lightning impulse		X	
7.3.5	Lightning impulse	X		
7.2.3	Switching-impulse wet		X	
7.2.4	Switching-impulse dry		X	
7.3.6	Switching impulse	X[a]		
7.2.5.3	DC applied voltage	X		
7.2.5.4	DC polarity reversal	X		
7.2.6	Capacitance	X		
7.2.6	Power factor	X		
7.2.7.1	Pressure test		X	
7.2.7.2	Cantilever strength		X	
7.2.8	Thermal test		X	
7.3.4	Potential tap withstand	X		
7.3.9	Mechanical tests	X		
7.4.1	Contamination test			X
7.4.2	Even rain test			X
7.4.3	Uneven rain test			X

[a] Only for wall bushings and roof bushings.

Table 3—Partial discharge limits (pC)

Type of construction	AC tests	DC tests
Resin impregnated paper	10 pC	See NOTE 2
Oil-impregnated paper	10 pC	

NOTES
1—These limits include background corona. Since these measurements are related to partial discharges within the major insulation, external shielding may be used to reduce corona that may occur at the bushing terminals or the grounded projections.
2—See 7.2.5.

Copyright The Institute of Electrical and Electronics Engineers, Inc.
Provided by IHS under license with IEEE
No reproduction or networking permitted without license from IHS
Not for Resale

Table 4—Power factor and capacitance limits

Type of construction	Power factor[c]		Capacitance
	Limit %	Acceptable change %[a]	Acceptable change %[b]
Resin-impregnated	0.85	+0.04	+1.0
Paper-insulated	—	–0.04	–1.0
Oil-impregnated	0.50	+0.02	+1.0
Paper-insulated	—	–0.06	–1.0

[a] The arithmetic difference in power factors (expressed in percent) measured at 10 kV or at the rated maximum line-to-ground voltage before and after dielectric withstand voltage test shall be within the specified limit. For example, if the power factor of the oil-impregnated, paper-insulated bushing was 0.30% before the withstand test, the maximum acceptable power factor after the test would be 0.32%.
[b] The percent change in capacitance after the dielectric withstand voltage test based on the initial value shall be within the specified limit. The measurements are to be made at 10 kV or at the rated maximum line-to-ground voltage. If the bushing has more than 100 conductive layers, the accepted percentage change in capacitance will be (1/No. of Layers) × 100.
[c] Corrected to 20 °C. See 7.1.4 g).

7.2.3 Wet switching-impulse withstand voltage

This test shall apply only to outdoor bushings and outdoor indoor bushings with a BIL of 900 kV and above. A positive polarity standard 250 × 2500 μs impulse, as described in IEEE Std 4-1995, shall be applied under wet conditions described in IEEE Std 4-1995 in 14.2, table 3, standard test procedure. Procedures shown in IEEE Std 4-1995 under 7.8.2.2, Withstand voltage test—procedure B, shall be used. The test voltage shall be as specified by the user.

7.2.4 Dry switching-impulse withstand voltage

This test shall apply only to indoor bushings with a BIL of 900 kV and above. A positive polarity standard 250 μs× 2500 μs impulse as described in IEEE Std 4-1995 shall be applied under dry conditions. Procedures shown in IEEE Std 4-1995 under paragraph 8.5, Withstand voltage test—procedure B, shall be used. The test voltage shall be as specified by the user.

7.2.5 DC tests

DC tests shall include the following:

a) DC voltage-withstand test with partial discharge measurement
b) Polarity reversal test with partial discharge measurement

7.2.5.1 DC test voltages

The dc test voltage for the apparatus bushings shall be 1.15 times the test voltage for the associated apparatus. The dc test voltage for the wall bushings shall be the same as that for the apparatus to which the wall bushing is connected.

Test voltages shall be calculated by using the equations below. The factor 1.15 in these equations is the margin stated above.

Copyright The Institute of Electrical and Electronics Engineers, Inc.
Provided by IHS under license with IEEE
No reproduction or networking permitted without license from IHS Not for Resale

Table 5—Cantilever test requirements for dc bushings

BIL	Rated current	Transverse force	
(kV)	(A)	(lb)	(N)
Up to 200	Up to 1000 1000–2000 2001–3000 > 3000	150 200 250 300	667 890 1112 1335
250 to 350	Up to 1000 1001–2000 2001–3000 > 3000	200 250 300 350	890 1112 1335 1557
550 to 650	Up to 1000 1001–2000 > 2000	300 350 400	1335 1557 1780
750 to 900	Up to 1000 1001–2000 > 2000	400 450 500	1780 2002 2225
1050 to 1175	Up to 1000 1001–2000 > 2000	500 550 600	2225 2447 2670
1300 to 1550	Up to 1000 1001–2000 > 2000	600 650 700	2670 2892 3115

NOTES
1—The above values apply to bushings operated at inclinations up to 20 degrees from the vertical. For bushings operated at angles greater than 20 degrees, an equivalent force appearing at the terminal due to the weight of the bushing should be added to the above test values.
2—During operation, the maximum transverse static force should not exceed 50% of the above values. For bushings operated at angles greater than 20° the maximum transverse static force should be limited to 30% of the above test values.

a) Transformer bushings

$$V_{DCT} = 1.15 \times 1.5[(Z - 0.5)V_d + 0.7V_{VO}] \quad (1)$$

$$V_{PRT} = 1.15 \times 1.25[(Z - 0.5)V_d + 0.35V_{VO}] \quad (2)$$

b) Smoothing reactor bushings

$$V_{DCR} = 1.15 \times 1.5ZV_d \quad (3)$$

$$V_{PRR} = 1.15 \times 1.25ZV_d \quad (4)$$

c) Wall bushings connected to transformer

$$V_{DCTW} = 1.5[(Z - 0.5)V_d + 0.7V_{VO}] \quad (5)$$

Copyright The Institute of Electrical and Electronics Engineers, Inc.
Provided by IHS under license with IEEE
No reproduction or networking permitted without license from IHS
Not for Resale

$$V_{PRTW} = 1.25[(Z - 0.5)V_d + 0.35V_{VO}] \quad (6)$$

d) Wall bushings connected to smoothing reactors

$$V_{DCRW} = 1.5ZV_d \quad (7)$$

$$V_{PRRW} = 1.25ZV_d \quad (8)$$

where

V_{DCT} is the dc test voltage for the applied voltage test for transformer bushings
V_{DCR} is the dc test voltage for the applied voltage test for smoothing reactor bushings
V_{PRT} is the dc test voltage for polarity reversal test for transformer bushings
V_{PRR} is the dc test voltage for polarity reversal test for smoothing reactor bushings
V_{DCTW} is the dc test voltage for applied voltage test for wall bushings connected to transformer
V_{PRTW} is the dc test voltage for polarity reversal test for wall bushings connected to transformer
V_{DCRW} is the dc test voltage for applied voltage test for wall bushings connected to smoothing reactors
V_{PRRW} is the dc test voltage for polarity reversal test for wall bushings connected to smoothing reactors
V_d is the maximum dc voltage per valve bridge = V_{DCS}/Z
V_{DCS} is the maximum dc rated voltage of the system
Z is the number of six-pulse bridges in series
V_{VO} is the maximum phase-phase ac operating voltage of valve winding of converter transformer

7.2.5.2 DC applied voltage withstand test with partial discharge measurement

A positive polarity voltage shall be applied to the bushing conductor. The duration of the test shall be a minimum of 2 h and this test shall be conducted before the polarity reversal test.

If the bushing withstands the specified test voltages and satisfies the partial discharge requirements as specified below, it shall be considered to have passed the test. If a flashover occurs on the outside of the insulating envelope, the test may be repeated. If the repeat test also results in flashover, the bushing shall be considered to have failed.

Partial discharge measurements shall be made continuously during the test. The result shall be considered acceptable and no further applied voltage tests required when during the last 30 min of the test no more than 7 pulses greater than 2000 pC are noted. If the number of pulses exceeds 7 during the last 30 min of the initial 120 min period, the test may be extended for another 30 min period, and the bushing shall be accepted when the number of pulses in this extension is no more than 7. Pulses that are proven to be external to the test object shall be disregarded.

7.2.5.3 DC polarity reversal test with partial discharge measurement

The following test sequence shall apply:

1) Apply negative polarity voltage for 90 min.
2) Reverse the polarity and maintain the voltage for 90 min.
3) Reverse the polarity again and maintain the voltage for 45 min.
4) Reduce the voltage to zero.

Copyright The Institute of Electrical and Electronics Engineers, Inc.
Provided by IHS under license with IEEE
No reproduction or networking permitted without license from IHS Not for Resale

In service conditions, the polarity reversals occur in 300 ms or less. In order to come closest to this actual service condition, the polarity reversal should be accomplished as fast as possible with no intentional delay, and shall be performed within 2 min maximum.

If the bushing withstands the specified test voltages and satisfies the partial discharge requirements, it shall be considered to have passed the test. If a flashover occurs on the outside of the insulating envelope, the test may be repeated. If the repeat test also results in flashover, the bushing shall be considered to have failed.

Partial discharge shall be measured throughout the entire polarity reversal test. The results shall be considered acceptable and no further polarity reversal tests required when during the 30 min following each reversal no more than 7 pulses greater than 2000 pC are noted. Because some discharge activity is normal during the polarity reversal, all pulses during the polarity reversal shall be disregarded. Pulses that are proven to be external to the test object shall be disregarded.

7.2.6 Power factor and capacitance

Power factor and capacitance measurements shall be made between the conductor and the bushing voltage or test tap before and after the dc tests. These measurements shall be made at a voltage of 10 kV or above as per 7.3.1 and 7.3.2. A bushing shall be considered to have passed the test if the limits and the tolerance of acceptable change as given in table 4 are satisfied.

7.2.7 Mechanical tests

7.2.7.1 Draw lead bushing cap pressure test

The bushing cap assembly shall withstand an internal hydraulic pressure test (gage) of 20 lb/in^2 (138 kPa) for 1 h without leakage.

7.2.7.2 Cantilever strength test

The bushing shall be rigidly mounted with load applied normal to the longitudinal axis of the bushing, at the midpoint of the thread or threaded terminals, and at the lower terminal plate on bushings so equipped. Tests shall be applied to the top and bottom (where applicable) terminals of the bushing but not simultaneously.

During the cantilever test the bushing internal pressure (gage) shall be 10 lb/in^2 (69 kPa). The specified load shall (see table 5) be applied for a period of 1 min Permanent deformation, measured at the bottom end 1 min after removal of the load, shall not exceed 0.06 in (1.52 mm). There shall be no leakage at either end at any time during or within 10 min after removal of the load.

7.2.8 Thermal test

This test does not apply to draw-lead bushings. All other bushings shall be tested as specified in this subclause.

7.2.8.1 Connections

The connections to the bushings shall be made in such a manner that they will not appreciably affect the bushing temperature rise.

7.2.8.1.1 Connections of the oil side of apparatus bushings

The lower end of the bushing shall be immersed to the oil level required in 5.4.3 and with the oil at a temperature of 65 ± 2 °C above the ambient temperature. The temperature of the lower end (oil bath) shall be mea-

Copyright The Institute of Electrical and Electronics Engineers, Inc.
Provided by IHS under license with IEEE
No reproduction or networking permitted without license from IHS
Not for Resale

sured by a thermocouple immersed approximately 2 in (50 mm) below the oil surface and located approximately 6 in (150 mm) from the surface of the bushing.

7.2.8.1.2 Connections of the air side of apparatus bushings and connections of wall bushings

The temperature of the surrounding air shall neither be less than 10 °C nor more than 40 °C. No corrections for variations of the ambient temperature within this range shall be applied.

For apparatus bushings the ambient temperature shall be determined as that of the surrounding air by taking the average reading of the three thermometers placed at least 2 ft (610 mm) away from any part of the bushing on test. The thermometers shall be located at heights corresponding to the mounting flange, midpoint and top of the bushing.

For wall bushings, the ambient temperature shall be determined as that of the surrounding air by taking the average reading of five thermometers placed at least 2 ft (610 mm) away from the bushing. the thermometers shall be located at positions corresponding to the mounting flange, midpoints of air insulators, and at both ends of the bushing.

7.2.8.2 Measurement of the hot-spot temperature

The temperatures during the test shall be measured with thermocouples in sufficient number to detect the hottest part. The temperature of the hottest point on the conductor of the bushing shall be determined by thermocouples soldered or suitably fixed along the length of the conductor or imbedded in the insulation. The test shall be continued until the temperature has stabilized and does not vary by more than ± 2° during 2 h.

7.2.8.3 Application of current

The applied current is different depending on the application of the bushing.

For bushings for pure dc application, the applied current should be equal to the rated continuous dc current. If a dc current source is not available, an alternating 50 Hz or 60 Hz current supply will be acceptable. In such a case, the same current shall be used (if an ac source is used, correction for skin effect might be done if agreed upon by purchaser and manufacturer).

For bushings for combined voltage application, the test current I_{testac} is a 50 Hz or 60 Hz current calculated using the formulas (9) and (10) below:

$$I_{eqdc} = \sqrt{\sum_n I_n^2 \times K_n} \tag{9}$$

$$I_{testac} = \sqrt{I_{eqdc}^2 \times \frac{R_{dc}}{R_{ac}}} \tag{10}$$

where

I_n is the magnitude of harmonic current

K_n is the $\dfrac{\text{effective resistance at nth harmonic}}{R_{dc}}$

Copyright The Institute of Electrical and Electronics Engineers, Inc.
Provided by IHS under license with IEEE
No reproduction or networking permitted without license from IHS Not for Resale

I_{eqdc} is the total equivalent dc current

I_{testac} is the applied fundamental frequency ac current during the thermal test

R_{dc} is the dc resistance for the test object

R_{ac} is the resistance at fundamental frequency

7.2.8.4 Acceptance criteria

Requirements, as outlined in 5.4.3, shall be fulfilled or the bushing shall be considered to have failed.

7.3 Routine tests

Routine tests are those tests made to check the quality and uniformity of the workmanship and materials used in the manufacture of power apparatus bushings.

Routine tests are listed in table 2.

Measurements of power factor, capacitance, and apparent charge shall be carried out before and after the series of routine tests in order to check whether any change has occurred.

7.3.1 Capacitance, C_1, and C_2 measurement

Capacitance C_1 between the bushing high-voltage conductor and the voltage or test tap, and where applicable, capacitance C_2 between the voltage tap and grounded flange shall be measured at 10 kV or above before and after their respective low-frequency withstand voltage tests. Tolerance of acceptable change is specified by table 4.

7.3.2 Power factor

The power factor between the bushing conductor and the bushing voltage or test tap shall be measured at 10 kV or above by the Ungrounded Specimen Test (UST) method before and after the low-frequency withstand voltage test.

Solid bushings not equipped with test taps shall be tested by the Grounded Specimen Test (GST) method after the low-frequency withstand voltage test. Limits and tolerance of acceptable change are specified by table 4.

7.3.3 Low-frequency dry withstand test with partial discharge measurements

The test shall be made with the bushing clean and dry. If the bushing withstands the specified test voltage and meets the partial discharge limits, as specified below, it shall be considered to have passed the test.

Partial discharges generated within the bushing during test shall be determined by apparent charge measurement.

General principles and circuit for apparent charge measurement are described in IEC 270-1981 and a particular type of wide-band measurement is described in IEEE Std C57.113-1991.

Measurements may be made by using either the bushing voltage tap or the coupling capacitor method.

Copyright The Institute of Electrical and Electronics Engineers, Inc.
Provided by IHS under license with IEEE
No reproduction or networking permitted without license from IHS
Not for Resale

The bushing shall be subjected to the following test procedure:

a) Measure apparent charge at a Voltage V_{AC}. The test voltage V_{AC} shall be calculated as follows:
   1) Transformer bushings

$$V_{ACT} = 1.15 \times \frac{1.5}{\sqrt{2}} \times \left[(Z - 0.5) \times V_d + \frac{\sqrt{2}}{\sqrt{3}} \times V_{vo} \right] \quad (11)$$

   2) Smoothing reactor bushings

$$V_{ACR} = 1.15 \times \frac{1.5}{\sqrt{2}} \times Z \times V_d \quad (12)$$

   The test voltages for the wall bushings connected to transformers or the smoothing reactors shall be calculated as above except that the factor 1.15 may be omitted.

   The partial discharge limits are specified in table 3.

b) Perform a 1 min dry withstand test at a voltage level equal to the bushing BIL divided by 2.1. If a flashover occurs outside the insulating envelope, the test may be repeated. If the repeat test also results in a flashover, the bushing shall be considered to have failed. No partial discharge measurements are required during this test.

c) Repeat measurements of apparent charge at V_{AC}. The partial discharge limits are specified in table 3.

7.3.4 DC tests

DC tests shall be performed as specified in 7.2.5.

7.3.5 Full-wave lightning impulse withstand test and chopped wave lightning impulse withstand test

For wall bushings and roof bushings, this test shall be performed as specified in 7.2.2.

For bushings other than wall bushings and roof bushings, five full-wave impulses of negative polarity shall be applied. By contractual agreement, three full-wave impulses of negative and two chopped-wave impulses of negative polarity can be applied.

Procedure as described in IEEE Std 4-1995, including procedure shown under 7.8.2.2, Withstand voltage test—procedure B, shall be used. The test voltages shall be as given in 7.2.2.

7.3.6 Dry switching impulse withstand test

For wall bushings and roof bushings, this test shall be performed as specified in 7.2.4. For other bushings, no test is specified.

7.3.7 Tap withstand voltage

A low-frequency withstand test shall be applied to or induced at the tap for 1 min with the bushing mounting flange grounded. Voltage taps shall be tested at 20 kV. Test taps shall be tested at 2 kV.

Copyright The Institute of Electrical and Electronics Engineers, Inc.
Provided by IHS under license with IEEE
No reproduction or networking permitted without license from IHS Not for Resale

7.3.8 Mechanical tests

An internal hydraulic pressure test shall be applied at 20 psi gage (138 kPa) for a minimum of 1 h without resultant leakage.

7.4 Special tests

Special tests are not a part of routine or design tests. Special tests shall be done only when agreed upon between the user and the manufacturer.

7.4.1 Contamination test

Proper test methods to prove the performance of the bushing under contaminated conditions are in the stage of development. As a guide to the contamination test procedure, IEC Technical Report [Reference Number: 36 (Secretariat) 85], Artificial pollution tests on high-voltage insulators to be used on dc systems, might be used. ESDD level shall be as agreed upon between the user and the manufacturer.

7.4.2 Even rain tests

The test shall be carried out at a voltage level of 1.25 times the maximum continuous dc line voltage.

The rain shall be as described in IEEE Std 4-1995, subclause 14.2, table 3, standard test procedure.

The voltage shall be applied after the rain has been on for at least 2 min. The test duration shall be 1 h. The bushing shall be considered to have passed the test if no flashovers occur during the test.

7.4.3 Uneven rain tests

Laboratory tests have indicated that the dielectric withstand ability of (nearly) horizontal wall bushings may be affected by non-uniform wetting of the outdoor insulator, which can take place when the lower flange end of insulator is shielded by the building wall, creating a dry zone. The most severe reductions are seen with bare porcelain insulators.

The reproducibility of uneven rain tests made in different laboratories has not been established in a manner consistent with other standardized tests because of the difficulty and expense of performing these tests. However, further guidance will become available as research continues and when appropriate inter-laboratory comparisons are made.

If a test is carried out, the test voltage level should not be higher than 1.25 times the continuous dc voltage.

Copyright The Institute of Electrical and Electronics Engineers, Inc.
Provided by IHS under license with IEEE
No reproduction or networking permitted without license from IHS
Not for Resale