ANSI/IEEE Std. 583-1982
(Revision of ANSI/IEEE Std 583-1975)

An American National Standard

IEEE Standard Modular Instrumentation and Digital Interface System (CAMAC[1])

Sponsor
Instruments and Detectors Committee
of the
IEEE Nuclear and Plasma Sciences Society

Approved September 17, 1981
IEEE Standards Board

Approved December 15, 1981
American National Standards Institute

© Copyright 1982 by

The Institute of Electrical and Electronics Engineers, Inc 345 E. 47th Street, New York, NY 10017

No part of this publication may be reproduced in any form, in an electronic retrieval system or otherwise, without the prior written permission of the publisher.

[1]Computer Automated Measurement and Control

Copyright The Institute of Electrical and Electronics Engineers, Inc.
Provided by IHS under license with IEEE
No reproduction or networking permitted without license from IHS
Not for Resale

IEEE Standards documents are developed within the Technical Committees of the IEEE Societies and the Standards Coordinating Committees of the IEEE Standards Board. Members of the committees serve voluntarily and without compensation. They are not necessarily members of the Institute. The standards developed within IEEE represent a consensus of the broad expertise on the subject within the Institute as well as those activities outside of IEEE which have expressed an interest in participating in the development of the standard.

Use of an IEEE Standard is wholly voluntary. The existence of an IEEE Standard does not imply that there are no other ways to produce, test, measure, purchase, market, or provide other goods and services related to the scope of the IEEE Standard. Furthermore, the viewpoint expressed at the time a standard is approved and issued is subject to change brought about through developments in the state of the art and comments received from users of the standard. Every IEEE Standard is subjected to review at least once every five years for revision or reaffirmation. When a document is more than five years old, and has not been reaffirmed, it is reasonable to conclude that its contents, although still of some value, do not wholly reflect the present state of the art. Users are cautioned to check to determine that they have the latest edition of any IEEE Standard.

Comments for revision of IEEE Standards are welcome from any interested party, regardless of membership affiliation with IEEE. Suggestions for changes in documents should be in the form of a proposed change of text, together with appropriate supporting comments.

Interpretations: Occasionally questions may arise regarding the meaning of portions of standards as they relate to specific applications. When the need for interpretations is brought to the attention of IEEE, the Institute will initiate action to prepare appropriate responses. Since IEEE Standards represent a consensus of all concerned interests, it is important to ensure that any interpretation has also received the concurrence of a balance of interests. For this reason IEEE and the members of its technical committees are not able to provide an instant response to interpretation requests except in those cases where the matter has previously received formal consideration.

Comments on standards and requests for interpretations should be addressed to:

Secretary, IEEE Standards Board
345 East 47th Street
New York, NY 10017
USA

--`,,`-`-`,,`,,`,`,,`---

Copyright The Institute of Electrical and Electronics Engineers, Inc.
Provided by IHS under license with IEEE
No reproduction or networking permitted without license from IHS

Not for Resale

Foreword

[This Forward is not a part of ANSI/IEEE Std 583–1982, IEEE Standard Modular Instrumentation and Digital Interface System (CAMAC).]

The interface system on which this standard is based was developed by the ESONE Committee of European Laboratories** with the collaboration of the NIM Committee of the US Department of Energy (DOE).* This standard is based on ERDA[2] Reports TID-25875, July 1972 (corresponding to ESONE Report EUR 4100e) and TID-25877. The mandatory features and dimensions in this document are identical (see note) to those in the reports mentioned above and in Publications 482 and 516 of the International Electrotechnical Commission (IEC).

This standard was reviewed and balloted by the Nuclear Instruments and Detectors Committee of the IEEE Nuclear and Plasma Sciences Society. Because of the broad applicability of this instrumentation and interface system, coordination was established with numerous IEEE Societies, Groups, and Committees, including the Communications Society, Control Systems Society, Industry Applications Society, Industrial Electronics and Control Instrumentation Group, Instrumentation and Measurement Group, and the Power Generation and Nuclear Power Engineering Committees of the Power Engineering Society. This review and coordination resulted in valuable suggestions that have been incorporated into the standard.

The revision of this standard was in conjunction with the 1981 review (1982 issue) of the entire family of IEEE CAMAC standards undertaken to incorporate existing addenda and corrections into the standards.

At the time of approval of this standard, the membership of the Nuclear Instruments and Detectors Committee of the IEEE Nuclear and Plasma Sciences Society was as follows:

D. C. Cook, *Chair*
Louis Costrell, *Secretary*

J. A. Coleman	H. W. Kraner	J. H. Trainor
J. F. Detko	W. W. Managan	F. J. Walter
F. S. Goulding	G. L. Miller	S. Wagner
F. A. Kirsten	D. E. Persyk	
T. R. Kohler	P. L. Phelps	

At the time it approved this standard, the American National Standards Committee on Nuclear Instruments, N42, had the following representatives:

Louis Costrell, *Chair*
D. C. Cook, *Secretary*

American Conference of Governmental Industrial Hygienists ..... Jesse Lieberman
American Nuclear Society ..... Frank W. Manning
Health Physics Society ..... J. B. Horner Kuper
J. M. Selby *(Alt)*
Institute of Electrical and Electronics Engineers ..... Louis Costrell
Julian Forster *(Alt)*
David C. Cook *(Alt)*
A. J. Spurgin *(Alt)*
Instrument Society of America ..... M. T. Slind
J. E. Kaveckis *(Alt)*
Lawrence Berkeley National Laboratory ..... Lee J. Wagner
Oak Ridge National Laboratory ..... Frank W. Manning

[2]Department of Energy Research and Development Administration (now part of US Department of Energy).

Copyright The Institute of Electrical and Electronics Engineers, Inc.
Provided by IHS under license with IEEE
No reproduction or networking permitted without license from IHS
Not for Resale

D. J. Knowles *(Alt)*
US Department of the Army, Materiel Command ..... Abraham E. Cohen
US Department of Commerce, National Bureau of Standards ..... Louis Costrell
US Department of Energy ..... Gerald Goldstein
US Federal Emergency Management Agency ..... Carl R. Siebentritt, Jr
US Nuclear Regulatory Commission ..... Robert E. Alexander
US Naval Research Laboratory ..... David C. Cook
Members-at-Large ..... J. G. Bellian
O. W. Bilharz, Jr
John M. Gallagher, Jr
Voss A. Moore
R. F. Shea
E. J. Villario

***NIM Committee**[3]

L. Costrell, *Chair*

C. Akerlof
E. J. Barsotti
B. Bertolucci
J. A. Biggerstaff
A. E. Brenner
R. M. Brown
E. Davey
W. K. Dawson
S. R. Deiss
S. Dhawan
R. Downing
T. F. Droege
C. D. Ethridge
C. E. L. Gingell
A. Gjovig
B. Gobbi
D. B. Gustavson
D. R. Heywood
N. W. Hill
D. Horelick
M. E. Johnson
C. Kerns
F. A. Kirsten
P. F. Kunz
R. S. Larsen
A. E. Larsh, Jr
R. A. LaSalle
N. Latner
F. R. Lenkszus
R. Leong
C. Logg
S. C. Loken
D. R. Machen
D. A. Mack
J. L. McAlpine
L. B. Mortara
V. C. Negro
L. Paffrath
D. G. Perry
I. Pizer
E. Platner
S. Rankowitz
S. J. Rudnick
G. K. Schulze
W. P. Sims
D. E. Stilwell
J. H. Trainor
K. J. Turner
H. Verweij
B. F. Wadsworth
L. J. Wagner
H. V. Walz
D. H. White

NIM Executive Committee for CAMAC

L. Costrell, *Chair*

E. J. Barsotti
J. A. Biggerstaff
S. Dhawan
F. A. Kirsten
R. S. Larsen
D. A. Mack
J. H. Trainor

NIM Dataway Working Group

F. A. Kirsten, *Chair*

E. J. Barsotti
J. A. Biggerstaff
L. Costrell
S. Dhawan
A. Gjovig
D. R. Heywood
D. Horelick
C. Kerns
P. F. Kunz
R. S. Larsen
D. R. Machen
L. Paffrath
S. Rankowitz
S. J. Rudnick

[3]National Instrumentation Methods Committee of the US Department of Energy.

Copyright The Institute of Electrical and Electronics Engineers, Inc.
Provided by IHS under license with IEEE
No reproduction or networking permitted without license from IHS
Not for Resale

NIM Software Working Group

D. B. Gustavson, Jr, *Chair*
W. K. Dawson, *Secretary*

A. E. Brenner	C. D. Ethridge	C. A. Logg
R. M. Brown	M. E. Johnson	J. McAlpine
S. R. Deiss	P. A. LaSalle	L. B. Mortara
S. Dhawan	F. B. Lenkszus	D. G.Perry

NIM Mechanical and Power Supplies Working Group

L. J. Wagner, *Chair*

L. Costrell	C. Kerns	W. P. Sims
	S. J. Rudnick	

NIM Analog Signals Working Group

D. I. Porat, *Chair*

L. Costrell	C. E. L. Gingell	S. Rankowitz
	N. W. Hill	

NIM Serial System Subgroup

D. R. Machen, *Chair*

E. J. Barsotti	F. A. Kirsten	L. Paffrath
D. Horelick	R. G. Martin	S. J. Rudnick

NIM Block Transfer Subgroup

E. J. Barsotti, *Chair*

W. K. Dawson	R. A. LaSalle	R. G. Martin
F. A. Kirsten	F. R. Lenkszus	R. F. Thomas, Jr

NIM Multiple Controllers Subgroup

P. F. Kunz, *Chair*

E. J. Barsotti	F. A. Kirsten	R. G. Martin
	D. R. Machen	

****ESONE Committee**[4]

W. Attwenger, Austria, *Chair, 1980–81*
H. Meyer, Belgium, *Secretary*
Representatives of ESONE Member Laboratories

W. Attwenger, Austria	J. Biri, Hungary	B. A. Brandt, F. R. Germany
R. Biancastelli, Italy	B. Bjarland, Finland	F. Cesaroni, Italy
L. Binard, Belgium	D. A. Boyce, England	P. Christensen, Denmark

[4]European Standards on Nuclear Electronics Committee.

Copyright The Institute of Electrical and Electronics Engineers, Inc.
Provided by IHS under license with IEEE
No reproduction or networking permitted without license from IHS
Not for Resale

W. K. Dawson, Canada
M. DeMarsico, Italy
C. A. DeVries, Netherlands
H. Dilcher, F. R. Germany
B. V. Fefilov, USSR
R. A. Hunt, England
W. Kessel, F. R. Germany
R. Klesse, France
E. Kwakkel, Netherlands
J. L. Lecomte, France
J. Lingertat, D. R. Germany
M. Lombardi, Italy
M. Maccioni, Italy
P. Maranesi, Italy
C. H. Mantakas, Greece
D. Marino, Italy
H. Meyer, Belgium
K. D. Muller, F. R. Germany
J. G. Ottes, F. R. Germany
A. D. Overtoom, Netherlands
E. C. G. Owen, England
L. Panaccione, Italy
M. Patrutescu, Roumania
R. Patzelt, Austria
A. C. Peatfield, England
I. C. Pyle, England
B. Rispoli, Italy
M. Sarquiz, France
W. Schoeps, Switzerland
R. Schule, F. R. Germany
P. G. Sjolin, Sweden
L. Stanchi, Italy
R. Trechcinski, Poland
M. Truong, France
P. Uuspaa, Finland
H. Verweij, Switzerland
A. J. Vickers, England
S. Vitale, Italy
M. Vojinovic, Yugoslavia
K. Zander, F. R. Germany
D. Zimmermann, F. R. Germany

ENSONE Executive Group (XG)

W. Attwenger, Austria, XG, *(Chairman 1980–81)*
H. Meyer, Belgium, *Secretary*

P. Christensen, Denmark
M. Dilcher, F. R. Germany
B. Rispoli, Italy
M. Sarquiz, France
R. Trechcinski, Poland
A. Vickers, England
H. Verweij, Switzerland

ESONE Technical Coordination Committee (TCC)

A. C. Peatfield, England, *(TCC Chairman)*
P. Christensen, Denmark, *(TCC Secretary)*

W. Attwenger, Austria
R. Biancastelli, Italy
G. Bianchi, France
H. Dilcher, F. R. Germany
P. Gallice, France
W. Kessel, F. R. Germany
J. Lukacs, Hungary
R. Patzelt, Austria
P. J. Ponting, Switzerland
W. Schoeps, Switzerland
S. Vitale, Italy

ECA/ESONE CAMAC Document Maintenance Study Group (DMSG)

P. Gallice, France, *Chair*

R. C. M. Barnes, England
L. Besse, Switzerland
J. Davis, England
F. Iselin, Switzerland
H. Meyer, Belgium
H. J. Trebst, F. R. Germany

When this standard was approved on September 17, 1981, by the IEEE Standards Board it had the following membership:

I. N. Howell, Jr, *Chair*
Irving Kolodny, *Vice Chair*
Sava I. Sherr, *Secretary*

G. Y. R. Allen
J. J. Archambault
J. H. Beall
J. T. Boettger
Edward Chelotti
Edward J. Cohen
Len S. Corey
Jay Forster
Kurt Greene
Loering M. Johnson
Joseph L. Koepfinger
J. E. May
Donald T. Michael*
J. P. Riganati
F. Rosa
R. W. Seelbach
J. S. Stewart
W. E. Vannah
Virginius N. Vaughan, Jr
Art Wall
Robert E. Weiler

*Member emeritus

NOTE — Figures prefixed by the letter K are supplementary illustrations.

Copyright The Institute of Electrical and Electronics Engineers, Inc.
Provided by IHS under license with IEEE
No reproduction or networking permitted without license from IHS
Not for Resale

CAMAC and NIM Standards and Reports

Title	IEEE, ANSI Std No	IEC No	DOE No	EURATOM (EUR) or ESONE No
CAMAC Instrumentation and Interface Standards*	SH08482* (Library of Congress No 8185060)	—	—	—
Modular Instrumentation and Digital Interface System (CAMAC)	ANSI/IEEE Std 583-1982	516	TID-25875† and TID-25877†	EUR 4100e
Serial Highway Interface System (CAMAC)	ANSI/IEEE Std 595-1982	640	TID-26488†	EUR 6100e
Parallel Highway Interface System (CAMAC)	ANSI/IEEE Std 596-1982	552	TID-25876† and TID-25877†	EUR 4600e
Multiple Controllers in a CAMAC Crate	ANSI/IEEE Std 675-1982	729	DOE/EV-0007	EUR 6500e
Block Transfers in CAMAC Systems	ANSI/IEEE Std 683-1976 (Reaff 1981)	677	TID-26616†	EUR 4100 suppl
Amplitude Analog Signals within a 50 Ω System	—	—	TID-26614	EUR 5100e
The Definition of IML A Language for Use in CAMAC Systems	—	—	TID-26615	ESONE/IML/01
CAMAC Tutorial Articles	—	—	TID-26618	—
Real-Time BASIC for CAMAC	ANSI/IEEE Std 726-1982	‡	TID-26619†	ESONE/RTB/ 03
Subroutines for CAMAC	ANSI/IEEE Std 758-1979 (Reaff 1981)	713	DOE/EV-0016†	ESONE/SR/01
Recommendations for CAMAC Serial Highway Drivers and LAM Graders for the SCC-L2	—	—	DOE/EV-0006	ESONE/SD/02
Definitions of CAMAC Terms	Included in SH08482	678	DOE/ER-0104	ESONE/GEN/ 01
Standard Nuclear Instrument Modules NIM	—	547§	TID-20893 (Rev 4)	—

*This is a hard cover book that contains ANSI/IEEE Std 583-1982, ANSI/IEEE Std 595-1982, ANSI/IEEE Std 596-1982, ANSI/IEEE Std 675-1982, ANSI/IEEE Std 683-1976 (Reaff 1981), ANSI/IEEE Std 726-1982 and IEEE Std 758-1979 (Reaff 1981), plus introductory material and a glossary of CAMAC terms.

†Superseded by corresponding IEEE Standard listed.

‡In preparation.

§Covers only mechanical features and connector pin assignments.

NOTE — *Availability of Documents*

ANSI	Sales Department, American National Standards Institute, 1430 Broadway, New York, NY 10018.
IEEE	IEEE Service Center, 445 Hoes Lane, Piscataway New Jersey 08854, USA.
IEC	International Electrotechnical Commission, 1, rule de Varembé, CH-1211 Geneva 20, Switzerland.
DOE and TID Reports	National Bureau of Standards, Washington, D.C. 20234, USA, Attn: L. Costrell.
EURATOM	Office of Official Publications of the European Communitities, P.O. Box 1003, Luxembourg.
ESONE	Commission of the European Communities, CGR-BCMN, B-2440 GEEL, Belgium, Attn: ESONE Secretariat, H. Meyer.

Copyright The Institute of Electrical and Electronics Engineers, Inc.
Provided by IHS under license with IEEE
No reproduction or networking permitted without license from IHS
Not for Resale

CLAUSE PAGE

1. Introduction 1

2. Interpretation 1

3. Basic Features 2

4. Mechanical Characteristics 3

4.1 The Crate 4
4.2 Plug-In Units 6
4.3 Adaptor for NIM Units 9
4.4 The Dataway 9

5. Use of the Dataway Lines 14

5.1 Commands 15
5.2 Strobe Signals *S*1 and *S*2. 17
5.3 Data 17
5.4 Status Information 18
5.5 Common Controls *Z, C, I.* 28
5.6 Nonstandard Connections *P*1–*P*7. 29
5.7 Power Lines 30

6. Dataway Commands 30

6.1 Read Commands: Function Codes *F*(0)-*F*(7). 30
6.2 Control Commands: Function Codes *F*(8)-*F*(15). 31
6.3 Write Commands: Function Codes *F*(16)-*F*(23). 32
6.4 Control Commands: Function Codes F(24)-F(31) 34
6.5 External Representation of the Command 35

7. Signal Standards 35

7.1 Digital Signals on the Dataway 36
7.2 Other Digital Signals 42
7.3 Analog Signals 42

8. Power Line Standards 43

9. Forced Air Ventilation (Supplementary Information) 44

10. Use of Supplementary 6 V Power (Bus Lines Y1, Y2) 45

Annex A Definitions of Module and Controller (Informative) 60

Annex B Digital Signal Classes and Standard Markings for Coaxial Connectors (Supplementary Information) (Informative) 61

Annex C Preferred Connectors and Contact Assignments (Informative) 62

Annex D Typical Crate Mounted Power Supply and Ventilation Unit With Crate/Power Supply Interface Housing (Informative) 71

Annex E Camac Categories (Informative) 81

Annex F Bibliography (Informative) 82

Copyright The Institute of Electrical and Electronics Engineers, Inc.
Provided by IHS under license with IEEE
No reproduction or networking permitted without license from IHS
Not for Resale

An American National Standard

IEEE Standard Modular Instrumentation and Digital Interface System (CAMAC)

1. Introduction

This standard is intended to serve as a basis for a range of modular instrumentation capable of interfacing transducers and other devices to digital controllers for data and control. It consists of mechanical standards and signal standards that are sufficient to ensure physical and operational compatibility between units regardless of source.

The standard fully specifies a data bus (Dataway) by means of which instruments and other functional modules can communicate with each other, with peripherals, with computers, and with other external controllers as shown in Fig K1A. This serves to drastically reduce both the variety and quantity of interfacing required in a single installation and provides a considerable degree of computer independence. The multiplicity of computer dependent and instrument dependent interfaces shown in Fig K1B is typically replaced by a single computer dependent interface as in Fig K1C with one side of the interface speaking the computer language and the other side the standardized Dataway language. It will be noted that the Dataway is strictly a digital interface.

A single crate as shown in Fig K1A can typically accommodate up to twenty-three separate modules plus controller. Both single-crate systems and multiple-crate systems can be assembled. Fig K1D shows a multiple-crate system in which data is transferred in parallel, utilizing a parallel highway and a parallel highway driver. Fig K1E shows a serial system in which data is transferred bit or byte serial. The parallel system is especially useful where very high data rates are encountered, whereas the serial system is advantageous for industrial control and other applications where long distances are involved such that wiring cost is an important consideration. Standard parallel and serial highway configurations based on Figs K1D and K1E are being processed.

Maximum benefit is derived from using this standard as a whole. Selected portions may find application in additional areas. Other devices and buses, such as that of IEEE 488, can be readily incorporated into the system through an interfacing module.

2. Interpretation

> Statements that specify mandatory aspects of the system are enclosed in blocks such as this. They are usually accompanied by the word *must*.

The word *should* indicates a recommended or preferred practice which is to be followed unless there are sound reasons to the contrary.

The word *may* indicates a permitted practice, leaving freedom of choice to the designer.

Appendix E defines the various CAMAC categories.

Copyright © 1982 IEEE All Rights Reserved

Copyright The Institute of Electrical and Electronics Engineers, Inc.
Provided by IHS under license with IEEE
No reproduction or networking permitted without license from IHS
Not for Resale

3. Basic Features

This specification is intended to serve as a basis for a range of modular instrumentation capable of linking transducers and other devices with digital controllers or computers. It consists of mechanical standards and signal standards that are sufficient to ensure compatibility between units from different sources of design and production.

The basic features of the system are as follows:

1) It is a modular system, with functional units which can be combined to form equipment assemblies.
2) The functional units are constructed as plug-in units and are mounted in a standard crate.

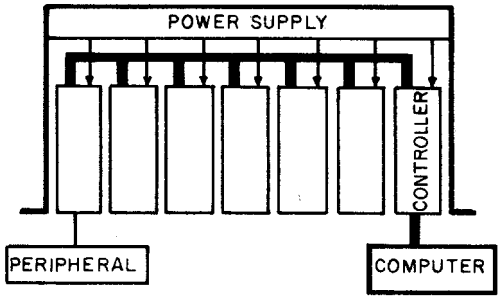

Figure K1A —Standard Arrangement. Data bus (Dataway) is heavy black line going to all modules

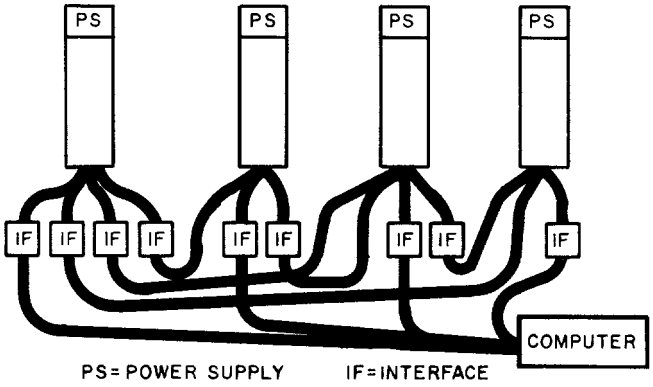

Figure K1B —Multiplicity of Interfaces Required by Nonstandard Arrangements

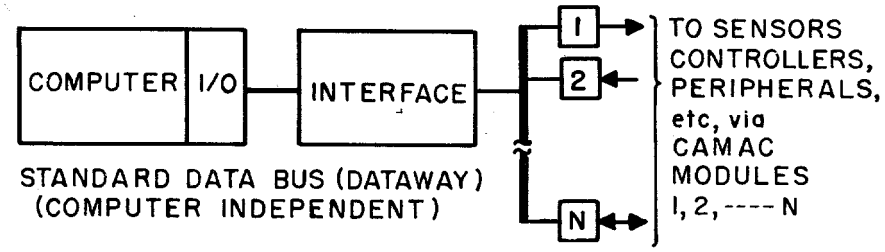

Figure K1C —Typical System With Standard Data Bus (Dataway) and Dedicated Interface

Copyright © 1982 IEEE All Rights Reserved

Copyright The Institute of Electrical and Electronics Engineers, Inc.
Provided by IHS under license with IEEE
No reproduction or networking permitted without license from IHS
Not for Resale

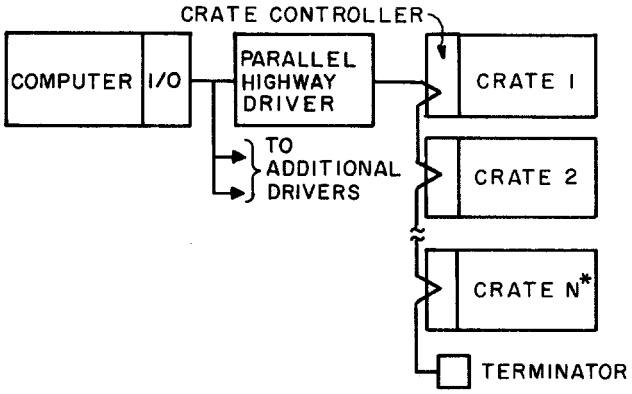

Figure K1D —Parallel Highway System
*Typically N = 7 max

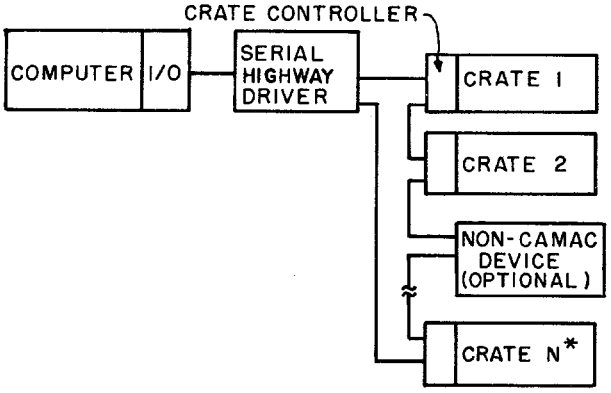

Figure K1E —Serial Highway System
*Typically N = 62 max

3) The mechanical structure is designed to exploit the high-component packing density possible with integrated circuit packages and similar devices.
4) Each plug-in unit makes direct connection to a standard Dataway. This highway forms part of the crate and conveys digital data, control signals, and power. The standards of the Dataway are independent of the type of plug-in unit or computer used.
5) The system has been designed so that an assembly consisting of a crate and plug-in units can be connected to an on-line digital computer. However, the use of a computer is entirely optional and no part of this specification depends upon its presence in the system.
6) External connections to plug-in units may conform to the digital or analog signal standards of associated transducers, computers, etc, or to the recommended standards given in this standard.
7) Assemblies of crates may be interconnected by means of parallel or serial highways.
8) No license or other permission is needed in order to use this standard.

4. Mechanical Characteristics

CAMAC is a modular system. Equipment assemblies are formed by mounting appropriate plug-in units in a standard chassis or crate. Each plug-in unit occupies one or more mounting stations in the crate. At each station there is an

Copyright © 1982 IEEE All Rights Reserved

Copyright The Institute of Electrical and Electronics Engineers, Inc.
Provided by IHS under license with IEEE
No reproduction or networking permitted without license from IHS
Not for Resale

eighty-six contact connector socket giving access to the CAMAC Dataway, a data highway which forms part of the crate. The Dataway consists mainly of bus lines for data, control, and power.

Drawings for the manufacture of CAMAC compatible crates and plug-in units can be derived from the definitive dimensions given in Figs 1–3 for crates, Fig 4 for plug-in units, and Fig 5 for Dataway connector plugs and sockets.

Recommended dimensions for ventilated crates, NIM adaptors, and printed wiring cards for plug-in units are given in the nonmandatory Figs 6–8, respectively.

All dimensions in these figures are in millimeters unless indicated otherwise.

4.1 The Crate

The crate mounts in a 19 inch rack and has up to twenty-five stations for plug-in units on a pitch of 17.2 mm. Each station has upper and lower guides for the runners of a plug-in unit, an eighty-six contact Dataway connector socket, and a tapped hole for the fixing screw of a plug-in unit. Modules conforming to the NIM specification (Type N Module of IEC Publ 482), also, ERDA Report TID - 20893 (see Bibliography) can be mounted in the crate on their basic pitch of 34.4 mm (see Section 4.3).

Unless indicated otherwise, all crates must conform to Fig 1–3 and those parts of Fig 5 defining the connector socket.

Sections 4.1.1 and 4.1.2 are comment on these figures.

4.1.1 Dimensions.

Fig 1 shows the front view of a basic twenty-five station crate which occupies the minimum height of 5*U* (*U* = 44.45 mm). Crates may have less than twenty-five stations, which, as indicated by Note 3 on Fig 1, need not be positioned symmetrically.

The lower cross-member has holes tapped ISO·M4 pitch 0.7 for the fixing screws of CAMAC plug-in units, and intermediate holes tapped UNC 6–32 for the lower fixing screws of NIM units. The upper cross-member may also have holes for the fixing screws of NIM units. The positions of these holes for CAMAC and NIM units, relative to the left-hand edge of the front aperture, are given in Fig 1 by the formulas for dimensions *z* and *w*, respectively.

The positions of the centers of the guides, also relative to the left-hand edge of the aperture, are given by the formula for dimension *x* in Fig 1. Detail A shows the entry into a guide. The dimensions of the lead-in are not specified.

Detail *B* gives dimensions specified for 19 inch rack-mounting equipment by the International Electrotechnical Commission in IEC Publ 297 and also specified in Electronic Industries Association Std RS - 310-B (ANSI C83.9–1972).

Fig 2 is a plan view of the lower guides in the crate. In order to remove any heat generated in the plug-in units, it is necessary to provide adequate ventilation through the bottom and top of the crate. The unobstructed area between adjacent guides, both at the top and bottom of the crate, is not permitted to be less than 15 cm^2 and should preferably be distributed over the full depth of the crate from the front cross-members to the Dataway assembly. If crates such as that shown in Fig 1 with height 5*U* (*U* = 44.45mm per IEC Publ 297), are mounted above or below other equipment, (including other similar crates), it may be necessary to use intermediate deflectors, etc, to ensure adequate ventilation. Alternatively, the crate may be extended to include additional ventilation features, as described in Section 4.1.3.

Fig 3 is a sectioned side view on the offset line *d-d* in Fig 1, passing through the center of an upper guide and a ventilating space between lower guides. The front faces of the upper and lower cross-members constitute the vertical datum of the crate. This datum is set back from the front face of the crate by a distance *e*, typically between 3 and 4

Copyright © 1982 IEEE All Rights Reserved

Copyright The Institute of Electrical and Electronics Engineers, Inc.
Provided by IHS under license with IEEE
No reproduction or networking permitted without license from IHS Not for Resale

mm, so that the front panels of plug-in units do not project beyond the front of the crate. The backs of the crate-mounting flanges are typically, but not necessarily, aligned with the datum.

The front ends of the upper and lower guides may be set back from the vertical datum. The guides extend sufficiently far toward the rear of the crate to ensure that the connector plug of a plug-in unit is guided into the entry of the connector socket.

The minimum overall depth of the crate provides mechanical protection for the Dataway assembly. The side panels are shorter than the frontal height of the crate (see dimensions *a* in Figs 1, 3, and 6,) to permit the use of typical runners for supporting the crate in the rack. This reduction in height extends at least to within 25 mm of the rear face of the rack-mounting flanges of the crate.

The running surface of the lower guide constitutes the crate horizontal datum. The Dataway assembly is not permitted to extend upward more than 135 mm from this horizontal datum, so that there is unrestricted access to the upper part of the rear of plug-in units.

The positions of the connector sockets are defined with respect to the three datum lines of the crate. The center lines of the sockets are defined with respect to the left-hand edge of the front aperture by dimension *y* in Fig 1. The vertical datum of the sockets is shown relative to the vertical datum of the crate in Figs 2 and 3, and the horizontal datum of the sockets relative to the horizontal datum of the crate in Fig 3.

SUPPLEMENTARY INFORMATION: The design of the rear of the crate should be such as to protect the Dataway from damage. At the same time, in the space above the Dataway, access must be provided to the rear of the plug-in units. Fig D-5 of Appendix D shows a typical interface housing unit to provide this protection and to accommodate a typical power supply. (See also Appendix D.)

4.1.2 Dataway Connector Sockets.

The Dataway connector sockets have two rows of forty-three contacts on a pitch of 0.1 in (2.54 mm). Mandatory and recommended dimensions of the sockets are given in Fig 5, together with additional commonly used dimensions upon which the designs of many existing crates and Dataway assemblies have been based.

The vertical datum of the connector sockets is the nominal position of the leading edge of the connector plug of a plug-in unit fully inserted into the crate. The position of the vertical datum is defined in 5.5 of Fig 5 with respect to other functional features of the socket. In some commonly used sockets the plane of the mounting face coincides with the vertical datum of the connector socket, but this is not necessarily so.

The maximum forward projection of the connector socket in front of the vertical datum is shown in 5.5 of Fig 5. The shapes of the straight or curved chamfers that guide the connector plug into the socket are shown in 5.6, 5.7, 5.8 of Fig 5. Within the minimum width shown for each chamfer the angle between any tangent to the chamfer and the line of entry of the connector plug does not exceed 60°.

If the front aperture of the crate extends to the inner surface of the right-hand side panel (as in Figs 1 and 2), the adjacent connector socket cannot exceed the recommended width of 12 mm. Elsewhere, sockets up to the maximum width of 17.2 mm can be used.

The dimensions of the contacts of the connector socket are shown in 5.4 of Fig 5. The position of each edge is defined by a dimension *d, D* relative to the horizontal datum of the socket, and is completely independent of the positions of all other edges on both rows of contacts.

Alternatively, a connector socket with point contacts may be used, in which case the distance between each point contact and the horizontal datum of the connector socket is $(2.56 + 2.54k) \pm 0.13$.

Copyright © 1982 IEEE All Rights Reserved

--`,,---,,,

4.1.3 Optional Features of the Crate.

The height of the crate may be extended by an integral number of *U* units (*U* = 44.45 mm), in Fig 6, in order to provide an entry for cool air which then flows up between the guides, and an exit for any warm air that may be rising from equipment below.

A crate may have fewer than twenty-five stations. The width of the front aperture is $17.2s^{+0.3}_{-0.0}$ mm for *s* stations, and formulas given in Fig 1 are used for locating the guides, connector socket, etc, at each station.

Power supply units may be mounted at the rear of a CAMAC crate. The overall depth of crate with rear-mounted power supplies may be limited by the depth of the rack. A recommended maximum depth of 525 mm is shown in Fig 3. A power supply unit is not allowed to extend upward above the maximum height of the Dataway assembly. It should not obstruct the entry or exit of the ventilating air flows in a crate such as that shown in Fig 6. The width of a rear-mounted power supply is limited to 447 mm.

4.2 Plug-In Units

Basically a plug-in unit consists of a front panel with fixing screw, top and bottom runners that slide in the guides of the crate, and an eighty-six contact Dataway connector plug. The connector plug is typically an integral part of a printed-wiring card but may be a separate male connector mounted at the rear of the plug-in unit. A plug-in unit may occupy more than one station and, if so, may have more than one set of runners and more than one connector plug.

Unless indicated otherwise, all plug-in units must conform to Fig 4 and those parts of Fig 5 defining the connector plug.

The following sections are comments on these figures.

4.2.1 Dimensions.

The horizontal datum of plug-in unit is the edge of the lower runner. The vertical datum is the rear face of the front panel. The upper and lower parts of the rear face should be in contact with the cross-members of the crate when the plug-in unit is fully inserted. Note 4 of Fig 4 therefore requires that the upper and lower 11 mm of the rear face of the front panel be free of projections, other than the fixing screws.

Fig 4 shows the dimensions of single-width and double-width plug-in units and gives general formulas for the front-panel widths of units.

It is recommended that the fixing screw should also provide a jacking action to assist in overcoming the withdrawal forces of the connector socket. The fixing screw of a single-width plug-in unit is located on the center line of the front panel. If a multiple-width unit has only one fixing screw, and this has a jacking action, the screw should be positioned to give the most effective pull for withdrawal of the plug-in unit (hence it should be at the same station as a single connector or approximately symmetrical with respect to two or more connectors).

Above the maximum height of the Dataway assembly there can be projections at the rear of the plug-in unit, extending more than 290 mm from the vertical datum. Below this height, in order to provide clearance for the connector socket, only the connector plug is allowed to extend beyond 290 mm.

There should be adequate ventilation through the bottom and top of each plug-in unit to remove any heat generated within the unit.

4.2.2 Dataway Connector Plug.

The dimensions of the connector plug are shown in 5.1, 5.2, 5.3 of Fig 5.

Copyright © 1982 IEEE All Rights Reserved

Copyright The Institute of Electrical and Electronics Engineers, Inc.
Provided by IHS under license with IEEE
No reproduction or networking permitted without license from IHS Not for Resale

The full eighty-six contacts are always present and extend to the extreme edge of the plug. In order to avoid the risk of damage to the contact plating of connector sockets by exposed abrasives in the substrate of the connector plug contacts must not expose substrate.

Chamfers are provided at the top and bottom of the connector socket and are therefore not needed at the top and bottom corners of the connector plug where the maximum permitted chamfer is 1 × 1 mm. For at least 13 mm from the edge of the plug the contacts are straight and plated.

SUPPLEMENTARY INFORMATION: A chamfer of approximately 0.1 mm × 0.1 mm is preferred on the top and bottom corners of the Dataway connector plug to further reduce the possibility of momentary mismating of the edge connector with the Dataway connector socket. Mismating can result in destruction of the circuits when plug-in units are inserted in energized crates. It will be noted that the Dataway connector socket includes an entrance ramp.

A chamfer of 0.3 mm max × 0.3 mm max is permitted on the two vertical edges of the connector (see 5.2, Section a-a of Fig 5).

The dimensions of the contacts of the connector plug are shown in 5.3 of Fig 5. The position of each edge is defined by a dimension *h, H* relative to the horizontal datum and is completely independent of the position of all other edges on both sides of the plug. The lowest contact on each side of the plug may be extended to the horizontal datum in order to reduce the impedance of the 0 V line.

SUPPLEMENTARY INFORMATION: Fig K4.2.2 shows details of a typical Dataway connector plug derived from Figs 5 and 8.

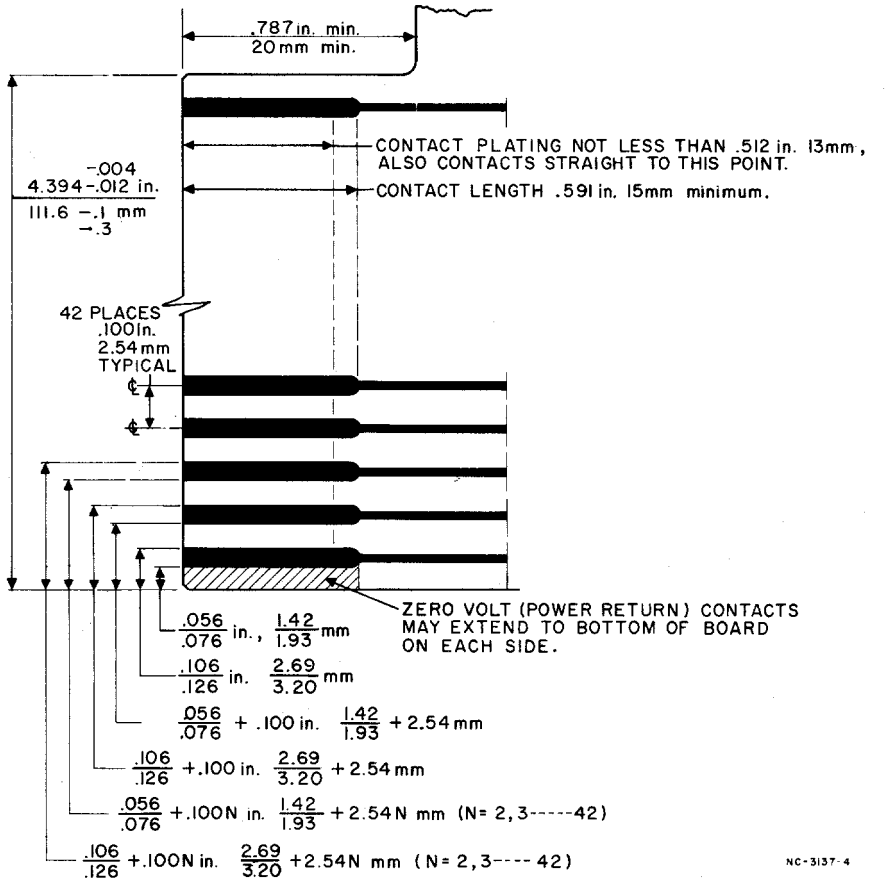

Figure K4.2.2 —Typical Dataway Connector Plug

Copyright © 1982 IEEE All Rights Reserved

Copyright The Institute of Electrical and Electronics Engineers, Inc.
Provided by IHS under license with IEEE
No reproduction or networking permitted without license from IHS
Not for Resale

4.2.3 Insertion of the Plug-In Unit into the Crate.

In the initial stages of insertion the plug-in unit is supported by the lower guide in the crate. The upper runner, although within the guide, has some vertical clearance. When the plug-in unit is fully inserted, the connector plug is located by the connector socket, and the front panel is supported by the securing screw. The top and bottom runners are then within the guides and approximately parallel to them, but both have some vertical clearance. The transition between these two states is described in detail below.

The dimensions of the guides and runners (Figs 1 and 4) ensure that the plug-in unit moves freely and is guided so that the leading edge of the connector plug enters the chamfers of the connector socket. The lower corner of the leading edge of the plug comes into contact with the chamfer at the bottom of the connector socket. Further insertion of the plug-in unit lifts the connector plug until its lower edge rests on the horizontal datum face of the connector socket. Even a connector plug with the maximum permitted 1 × 1 mm chamfer will have been lifted into correct alignment before any electrical contact occurs between the connector plug and socket. The position of maximum insertion without electrical contact, even with a maximum thickness plug, is defined in 5.5 of Fig 5 with respect to the vertical datum of the connector socket.

Before this point has been reached it will have been possible to engage the fixing screw in the corresponding tapped hole in the lower cross-member of the crate. This can be facilitated by having a tapered end to the screw, so that the front panel is lifted into the correct alignment.

Further insertion of the plug-in unit brings the contacts of the plug and socket into engagement, and the insertion force of the connector is encountered. The recommended maximum insertion and withdrawal forces are 80 N for each connector plug. Forces in excess of this can cause difficulty in inserting and withdrawing the plug-in unit and can also result in damage.

Fig 5, 5.5, defines, with respect to the vertical datum of the connector socket, the line beyond which there is reliable contact between corresponding contacts on the plug and socket, even with a plug of minimum thickness.

Finally, when the plug-in unit is fully inserted in the crate, the leading edge of the connector plug is nominally at the vertical datum of the connector socket and the lower datum face of the front panel of the plug-in unit is in contact with the lower cross-member of the crate. However, the forces due to the connector socket and fixing screw are not in line and tend to lift the connector plug off the horizontal datum of the socket, in which case there may be clearance between the upper datum face of the front panel and the upper cross-member. Fig 5, 5.5, ensures that there is adequate clearance beyond the extreme position of the connector plug, by defining a minimum distance between the vertical datum of the socket and any internal obstruction.

4.2.4 Printed-Wiring Card.

Fig 8 gives recommended dimensions for a printed-wiring card suitable for use with typical (but not necessarily all) commercially available frameworks for plug-in units conforming to this standard.

4.2.5 Other Connectors.

Connectors or other components such as switches may be mounted on the front panel or at the rear of the plug-in unit. Rear mounted components must be located above the maximum height limit of the Dataway assembly.

For subminiature coaxial connectors the Type 50CM in accordance with Fig 13 is strongly recommended.

There may, however, be special circumstances requiring the use of other connectors in order to suit a specific external equipment with which the plug-in unit is closely associated.

SUPPLEMENTARY INFORMATION: *Digital Signal Classes and Standard Markings for Coaxial Connectors*. Appendix B provides information for the guidance of users.

Copyright © 1982 IEEE All Rights Reserved

--`,,`-`-`,,`,,`,`,,`---

Copyright The Institute of Electrical and Electronics Engineers, Inc.
Provided by IHS under license with IEEE
No reproduction or networking permitted without license from IHS Not for Resale

Auxiliary Connectors. Preferred auxiliary connectors for some applications, together with recommended contact assignments, are described in Appendix C. These connectors are useful for communicating from and to plug-in units. This list is not intended to be restrictive since it is recognized that connectors must be suitable for the applications.

4.3 Adaptor for NIM Units

Plug-in units conforming to the NIM specification (Type N Module of IEC Publ 482) can be inserted into the guides of a CAMAC crate. In order to supply power to a NIM unit, which is shorter than a CAMAC plug-in unit, an adaptor is required between the Dataway connector socket and the connector on the NIM unit. The essential dimensions of such an adaptor are given in Fig 7.

4.4 The Dataway

Communication between plug-in units takes place through the Dataway. This passive multiwire highway is incorporated into the crate and links the Dataway connector sockets at all stations. The Dataway consists of signal lines and power lines, as shown in Table 1.

The extreme right-hand station, as viewed from the front of the crate, has the special role of control station. The data lines in the Dataway are accessible at the remaining normal stations, but not at the control station.

Most signal lines are bus lines linking corresponding contacts of the Dataway connector sockets at all normal stations and, in some cases, the control station. There are also individual lines, each linking one contact at a normal station to one contact at the control station. At each station there are contacts for unspecified uses. Two of these contacts are linked across all normal stations to form free bus lines. The remainder are available as patch contacts, but do not have specified Dataway wiring. The Dataway construction may extend these patch contacts, and others associated with the individual lines and certain bus lines, to more readily accessible patch points to which patch connections can be attached.

Copyright © 1982 IEEE All Rights Reserved

Copyright The Institute of Electrical and Electronics Engineers, Inc.
Provided by IHS under license with IEEE
No reproduction or networking permitted without license from IHS Not for Resale

Table 1 —Standard Dataway Usage

Title	Designation	Contacts	Use at a Module
Command Station Number	*N*	1	Selects the module (individual line from control station)
Subaddress	*A*1, 2, 4, 8	4	Selects a section of the module
Function	*F*1, 2, 4, 8, 16	5	Defines the function to be performed in the module
Timing Strobe 1	*S*1	1	Controls first phase of operation (Dataway signals must not change)
Strobe 2	*S*2	1	Controls second phase (Dataway signals may change)
Data Write	*W*1–*W*24	24	Bring information to the module
Read	*R*1–*R*24	24	Take information from the module
Status Look-at-Me	*L*	1	Indicates request for service (individual line to control station)
Busy	*B*	1	Indicates that a Dataway operation is in progress
Response	*Q*	1	Indicates status of feature selected by command
Command Accepted	*X*	1	Indicates that module is able to perform action required by the command
Common Controls			*Operate on all features connected to them, no command required*
Initialize	*Z*	1	Sets module to a defined state (Accompanied by *S*2 and *B*)
Inhibit	*I*	1	Disables features for duration of signal
Clear	*C*	1	Clears registers (Accompanied by *S*2 and *B*)
Nonstandard Connections Free bus lines	*P*1, *P*2	2	For unspecified uses
Patch contacts	*P*3–*P*5	3	For unspecified interconnections. No Dataway lines
Mandatory Power Lines			*The crate is wired for mandatory and additional lines*
+24 V dc	+24	1	
+ 6 V dc	+ 6	1	
– 6 V dc	– 6	1	
–24 V dc	–24	1	
0 V	0	2	Power return
Additional Power Lines			*Lines are reserved for the following power supplies:*
+12 V dc	+12	1	
–12 V dc	–12	1	
Clean Earth	*E*	1	Reference for circuits requiring clean earth
Supplementary –6 V**	*Y*1	1	See Section 10.
Supplementary +6 V	*Y*2	1	See Section 10.
Reserved undesignated		3	
Total		86	

Copyright © 1982 IEEE All Rights Reserved

Copyright The Institute of Electrical and Electronics Engineers, Inc.
Provided by IHS under license with IEEE
No reproduction or networking permitted without license from IHS Not for Resale

Table 2 —Contact Allocation at a Normal Station (Viewed From Front of Crate)

Bus line	Free Bus line	*P*1	*B*	Busy	Bus line
Bus line	Free Bus line	*P*2	*F*16	Function	Bus line
Individual patch contact		*P*3	*F*8	Function	Bus line
Individual patch contact		*P*4	*F*4	Function	Bus line
Individual patch contact		*P*5	*F*2	Function	Bus line
Bus line	Command Accepted	*X*	*F*1	Function	Bus line
Bus line	Inhibit	*I*	*A*8	Subaddress	Bus line
Bus line	Clear	*C*	*A*4	Subaddress	Bus line
Individual line	Station Number	*N*	*A*2	Subaddress	Bus line
Individual line	Look-at-Me	*L*	*A*1	Subaddress	Bus line
Bus line	Strobe 1	*S*1	*Z*	Initialize	Bus line
Bus line	Strobe 2	*S*2	*Q*	Response	Bus line
Twenty-four Write Bus lines		*W*24	*W*23		
*W*1 = least significant bit		*W*22	*W*21		
*W*24 = most significant bit		*W*20	*W*19		
		*W*18	*W*17		
		*W*16	*W*15		
		*W*14	*W*13		
		*W*12	*W*11		
		*W*10	*W*9		
		*W*8	*W*7		
		*W*6	*W*5		
		*W*4	*W*3		
		*W*2	*W*1		
Twenty-four Read Bus lines		*R*24	*R*23		
*R*1 = least significant bit		*R*22	*R*21		
*R*24 = most significant bit		*R*20	*R*19		
		*R*18	*R*17		
		*R*16	*R*15		
		*R*14	*R*13		
		*R*12	*R*11		
		*R*10	*R*9		
		*R*8	*R*7		
		*R*6	*R*5		
		*R*4	*R*3		
		*R*2	*R*1		
Power Bus lines	−12 V de	−12	−24	−24 V dc	
	Reserved (c)*		−6	−6 V dc	
	Reserved (a)*	—	—	Reserved (b)*	
	Supplementary −6 V†	*Y*1	E	Clean Earth	
	+12 V dc	+12	+24	+24 V dc	
	Supplementary +6 V**	*Y*2	+6	+6 V dc	
	0 V (Power Return)	0	0	0 V (Power Return)	

**Reserved (c)* was previously assigned to +200 V dc,
Reserved (a) to 117 V ac Line, and
Reserved (b) to 117 V ac neutral, all non-mandatory voltages.
Effective 1 January 1978, these assignments were cancelled in order to avoid hazardous voltages on the connectors.
†See Section 10.

Copyright © 1982 IEEE All Rights Reserved

Copyright The Institute of Electrical and Electronics Engineers, Inc.
Provided by IHS under license with IEEE
No reproduction or networking permitted without license from IHS
Not for Resale

Table 3 —Contact Allocation at the Control Station (Viewed From Front of Crate)

Individual patch contact		*P*1	*B*	Busy	Bus line
Individual patch contact		*P*2	*F*16	Function	Bus line
Individual patch contact		*P*3	*F*8	Function	Bus line
Individual patch contact		*P*4	*F*4	Function	Bus line
Individual patch contact		*P*5	*F*2	Function	Bus line
Bus line	Command Accepted	*X*	*F*1	Function	Bus line
Bus line	Inhibit	*I*	*A*8	Subaddress	Bus line
Bus line	Clear	*C*	*A*4	Subaddress	Bus line
Individual patch contact		*P*6	*A*2	Subaddress	Bus line
Individual patch contact		*P*7	*A*1	Subaddress	Bus line
Bus line	Strobe 1	*S*1	*Z*	Initialize	Bus line
Bus line	Strobe 2	*S*2	*Q*	Response	Bus line
Twenty-four individual Look-at Me lines (*L*1 from Station 1, etc)		*L*24	*N*24	Twenty-four individual Station Number lines, (*N*1 to Station 1, etc.)	
		*L*23	*N*23		
		*L*22	*N*22		
		*L*21	*N*21		
		*L*20	*N*20		
		*L*19	*N*19		
		*L*18	*N*18		
		*L*17	*N*17		
		*L*16	*N*16		
		*L*15	*N*15		
		*L*14	*N*14		
		*L*13	*N*13		
		*L*12	*N*12		
		*L*11	*N*11		
		*L*10	*N*10		
		*L*9	*N*9		
		*L*8	*N*8		
		*L*7	*N*7		
		*L*6	*N*6		
		*L*5	*N*5		
		*L*4	*N*4		
		*L*3	*N*3		
		*L*2	*N*2		
		*L*1	*N*1		
Power Bus lines	−12 V dc	−12	−24	−24 V dc	
	Reserved (c)*		−6	−6 V dc	
	Reserved (a)*	—	—	Reserved (b)*	
	Supplementary −6 V†	*Y*1	*E*	Clean Earth	
	+12 V dc	+12	+24	+24 V dc	
	Supplementary +6 V**	*Y*2	+6	+6 V dc	
	0 V (Power Return)	0	0	0 V (Power Return)	

**Reserved (c)* was previously assigned to +200 V dc,
Reserved (a) to 117 V ac Line, and
Reserved (b) to 117 V ac Neutral, all non-mandatory voltages.
Effective 1 January 1978, these assignments were cancelled in order to avoid hazardous voltages on the connectors.
†See Section 10.

Copyright © 1982 IEEE All Rights Reserved

Copyright The Institute of Electrical and Electronics Engineers, Inc.
Provided by IHS under license with IEEE
No reproduction or networking permitted without license from IHS
Not for Resale

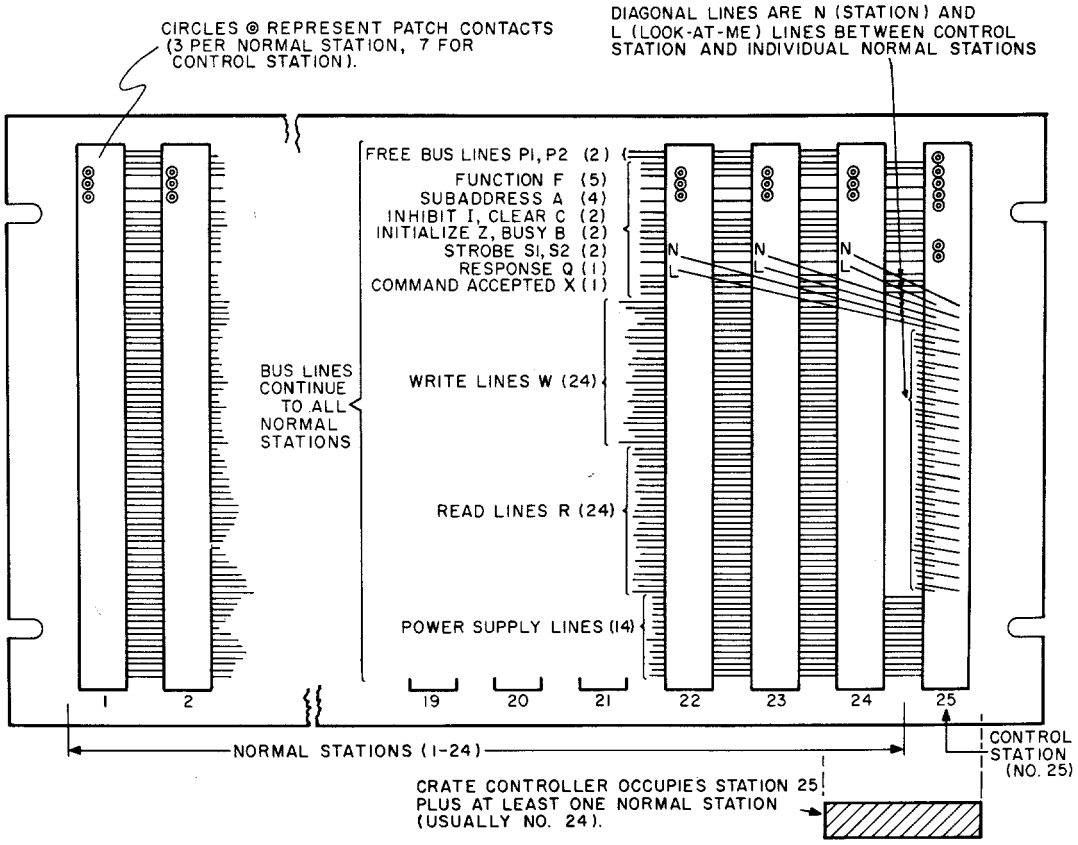

Figure K4.4 —Dataway Wiring, Front View of Twenty-Five Station Crate

The power lines link corresponding contacts of the Dataway connector sockets at all stations. The power return line (0 V) links two contacts in parallel at all stations.

The assignment of contacts at the Dataway connector and their connections to bus lines, individual lines, and patch contacts must be as shown in Table 2 for normal stations and Table 3 for the control station. The control station must be to the right of all normal stations.

The method of construction of the Dataway must be consistent with the signal standards for signal lines (see Section 7.) and with the maximum current loads specified for the power lines (see Section 8.).

Apart from this, the construction of the Dataway is not specified. Appropriate techniques include printed wiring on flexible or rigid substrates (with and without ground planes) and soldered or wrapped wiring. Particular attention should be given to the cross-coupling between signal lines, and to their capacitance to ground.

SUPPLEMENTARY INFORMATION:

Dataway Wiring. Fig K4.4 shows the Dataway wiring in a crate with twenty-five stations. The twenty-four normal stations (station numbers 1–24) of the crate are wired identically. The wiring of the control station (number 25) is different from that of the normal stations. Since a crate controller must have access to the Read *R* and Write *W* bus lines, it must occupy at least one normal station in addition to the control station.

The Dataway lines (and contacts) fall into the four categories described below:

Copyright © 1982 IEEE All Rights Reserved

Copyright The Institute of Electrical and Electronics Engineers, Inc.
Provided by IHS under license with IEEE
No reproduction or networking permitted without license from IHS Not for Resale

1) *All Station Bus Lines* linking corresponding Dataway connector contacts at all stations, including the control station. There are thirty-one such bus lines as follows:

Function lines *F*	5	Busy *B*	1
Subaddress lines *A*	4	Response *Q*	1
Inhibit *I*	1	Strobe *S*1, *S*2	2
Clear *C*	1	Command Accepted *X*	1
Initialize *Z*	1	Power Supply lines	14

2) *Normal Station Bus Lines* linking corresponding Dataway connector contacts at all normal stations, but not connected to the control station. There are fifty such bus lines as follows:

Write lines *W*	24
Read lines *R*	24
Free bus lines *P*1, *P*2	2

3) *Individual Lines* between the control station and each normal station. There are two such lines for each normal station, the *N* line (Station Number line), by which the control station addresses specific normal stations, and the *L* line (Look-at-Me line), by which specific stations advise the control station that they desire attention. Thus twenty-four *N* lines and twenty-four *L* lines connect to the control station.
4) *Patch Contacts* (for each Dataway station) that are not connected to the Dataway and are thus available for patch connections. There are three patch contacts for each normal station and seven for the control station.

Dataway Patch Contact Terminals. It is mandatory that patch contacts (such as wire-wrap terminals) be provided for *P*3-*P*5 of normal stations and *P*1-*P*7 of the control station. In addition, it is preferred practice to have such contact terminals provided also for *I, C,* and the 0 V (Power Return) buses and for each *N* and *L* line.

5. Use of the Dataway Lines

Each line of the Dataway must be used in accordance with the mandatory requirements detailed in the following sections and summarized in Table 1.

A typical Dataway operation involves at least two plug-in units, one of which acts as a controller and the other as a controlled module. In this standard the terms controller and module have the following specific meanings. Controller refers to a unit occupying the control station and at least one normal station. Module refers to a unit occupying one or more normal stations. Both receive signals from some Dataway lines and generate signals on others in accordance with the definitions given in Appendix A. (In practice there can be special cases of units that combine some properties of a controller with some properties of a module.)

There are two types of Dataway operations. During *command operations* the controller generates a command consisting of signals on individual Station Number lines to specify one or more modules, on the Subaddress bus lines to specify a subsection of the module, and on the Function bus lines to specify the operation to be performed. During *unaddressed operations* there is no command, but the controller generates one of the common control signals on the Initialize or Clear bus lines, and this operates on all modules connected to the bus line. During command operations and unaddressed operations the controller generates a signal on the Busy bus line. The Busy signal is available at all stations to indicate that a Data-way operation is in progress. Two timing signals, Strobes *S*1 and *S*2, are generated in sequence on separate bus lines during command operations. Only Strobe *S*2 is mandatory during unaddressed operations, but *S*1 may also be generated.

Copyright © 1982 IEEE All Rights Reserved

Copyright The Institute of Electrical and Electronics Engineers, Inc.
Provided by IHS under license with IEEE
No reproduction or networking permitted without license from IHS Not for Resale

During a Dataway command operation there may be a read data transfer from a module to the controller, or a write data transfer from the controller to a module, or neither.

In response to a read command the addressed module establishes Read data signals which are available to the controller from the time of Strobe *S*1 onwards. In response to a write command the addressed module accepts Write data signals from the controller at the time of Strobe *S*1.

The addressed module indicates by a signal on the Command Accepted bus line whether it is able to perform the action required by the command. It may also transmit one bit of status information on the Response bus line. The controller accepts the Command Accepted and Response signals at the time of Strobe *S*1.

Any module may generate a signal on its individual Look-at-Me line to indicate that it requires attention.

Three common control signals are available at all stations, without requiring addressing by a command, in order to Initialize all units (typically after switch-on), to Clear data registers, or to Inhibit features such as data taking.

The use of each Dataway line is defined in the following sections. The relationship between signals, in order to generate specific commands, is defined in Section 6., and the electrical signal standards, including timing, are defined in Section 7.

The sequence of events during command operations is described in Section 7.1.3.1 and shown in Fig 9. The sequence during unaddressed operations is described in Section 7.1.3.2 and shown in Fig 10.

SUPPLEMENTARY INFORMATION: *Block Transfers*. A block transfer may be defined as a specified sequence of CAMAC operations initiated by a single, more powerful command (a block transfer command). It is possible to design a large number of block transfer sequences (modes) which are compatible with this standard. However, a relatively small number of modes can accomplish nearly all block transfers which are usually needed. To enhance compatibility among modules, controllers, and software, it is recommended that only the defined modes be used.

5.1 Commands

The state of the signals on the individual Station Number lines (specifying a module or modules), the four Subaddress lines (specifying a subsection of the module) and the five Function lines (specifying the type of operation) constitute a command.

The command signals are maintained for the full duration of the Dataway operation. They are accompanied by a signal on the Busy bus line, which indicates to all units that a Dataway operation is in progress.

> Plug-in units must not rely on the state of signals on the Subaddress and Function lines when no command operation is in progress.

5.1.1 Station Number N

> Each normal station is addressed by a signal on an individual Station Number line N_i which comes from a separate contact at the control station (see Tables 2 and 3). The stations are numbered in decimal from the left-hand end as viewed from the front, beginning with Station 1 (addressed by *N*1).

There is no restriction on the number of stations that can be addressed simultaneously and the design of the modules should permit this.

Copyright © 1982 IEEE All Rights Reserved

Copyright The Institute of Electrical and Electronics Engineers, Inc.
Provided by IHS under license with IEEE
No reproduction or networking permitted without license from IHS Not for Resale

5.1.2 Subaddress A8, A4, A2, A1

Different sections of a module are addressed by signals on the four *A* bus lines. These signals are decoded in the module to select one of up to sixteen subaddresses, numbered in decimal from *A*(0) to *A*(15).

The subaddress may be used to select, for example, a register within the module, or a feature that is to control the Response signal Q, or a section of the module that is to be operated on by functions such as Enable, Disable, and Execute. The use made of the subaddress within a module is discussed in relation to the function codes in Section 6.

Each subaddress code used in a module must be fully decoded in the module. Full decoding means that all four Dataway Subaddress signals are used in the decoding process.

The subaddress codes are designated *A*(0), *A*(1), *A*(2), *A*(3), etc, to distinguish them from the individual Subaddress lines *A*1, *A*2, *A*4, and *A*8. For example, the Subaddress signals *A*1 = 1, *A*2 = 1, *A*4 = 0, and *A*8 = 0 represent the code *A*(3).

5.1.3 Function F16, F8, F4, F2, F1

The function to be performed at the specified subaddress in the selected module or modules is defined by the signals on the five *F* bus lines. These signals are decoded in the module to select one of up to thirty-two functions, numbered in decimal from *F*(0) to *F*(31). The definitions of the thirty-two function codes are summarized in Table 4 and are detailed in Section 6. in relation to the command structure.

In some systems the controller partially decodes the Function signals in order to determine whether a data transfer is required to a module (writing) or from a module (reading). Multiple-station addressing allows operations with the same function code to be performed simultaneously in more than one module. These features depend on some standardization in the assignment of function codes.

The function codes are subdivided into three groups, involving read operations, write operations, and operations with no transfer of data. The standard function codes have defined actions in modules and controllers. There are also reserved codes, for any future additions to the standard codes, and nonstandard codes whose use is not defined in detail.

Each function code used in a module must be fully decoded in the module. Full decoding means that all five Dataway Function signals are used in the decoding process.

The function codes are designated *F*(0), *F*(1), *F*(2), *F*(3), etc, to distinguish them from the individual function lines *F*1, *F*2, etc. For example, the Function signals *F*1 = 1, *F*2 = 0, *F*4 = 0, *F*8 = 1, and *F*16 = 1 represent the code *F*(25).

Copyright © 1982 IEEE All Rights Reserved

Copyright The Institute of Electrical and Electronics Engineers, Inc.
Provided by IHS under license with IEEE
No reproduction or networking permitted without license from IHS Not for Resale

5.2 Strobe Signals S1 and S2.

During each command operation the controller generates two Strobe signals *S*1 and *S*2 in sequence on separate bus lines. In response to these timing signals plug-in units initiate various actions appropriate to the command that is present on the Dataway.

Both Strobe signals must be generated during each command operation.

Plug-in units must not take irreversible action based on the command or data signals until the time of *S*1. Actions concerned with the acceptance of data and status information from the *R, W, Q*, and *X* lines must be initiated at the time of *S*1 (with the possible exception given below). Other actions may also be timed by *S*1, but must not change the state of signals on the *R* and *W* lines.

Any actions that can change the state of Dataway Read or Write signals must be initiated by the second strobe *S*2. For example, *S*2 must be used if it is required to clear a register whose output is connected to the Dataway.

Modules normally accept write data in response to *S*1, because the data signals are permitted to change at the time of *S*2. However, modules may accept write data in response to *S*2 under special circumstances, but this is not recommended.

During unaddressed Dataway operations the controller generates Strobe *S*2 to indicate when modules accept the common control signal. Strobe *S*1 may also be generated, but this is not mandatory, and modules cannot rely on it.

Strobe *S*2 must be generated during each unaddressed operation.

5.3 Data

All information carried by the Read and Write lines is conveniently described as data, although it may be information concerned with status or control features in modules. Information that is transferred to or from a control register in a module is thus regarded as data.

Up to 24 bits may be transferred in parallel between the controller and the selected module. Independent lines are provided for the read and write directions of transfer.

If the bits of a data word have different numerical significance, line R_n should be used for a higher order bit than R_{n-1}, and W_n for a higher order bit than W_{n-1}.

It is recommended that controllers have 24 bit capability. For particular applications assemblies are permitted in which the controller has a word length less than 24 bits and the modules have an equal or smaller word length.

Plug-in units must not rely on the state of signals on the Read and Write bus lines when no command operation is in progress.

5.3.1 Write Lines W1-W24

The controller generates data signals on the *W* bus lines during each write operation. The *W* signals must reach a steady state before *S*1 and must be maintained until the end of the operation, unless modified by *S*2. Strobe *S*1 must be used by the modules to strobe the data unless there are very strong technical reasons for choosing *S*2 (see Section 5.2).

The *W* lines serve a few data sources (typically only one controller) and many data receivers.

Copyright © 1982 IEEE All Rights Reserved

Copyright The Institute of Electrical and Electronics Engineers, Inc.
Provided by IHS under license with IEEE
No reproduction or networking permitted without license from IHS Not for Resale

5.3.2 Read Lines R1-R24

Data signals are set up on the *R* bus lines by the module during a read operation. The *R* signals must reach a steady state before *S*1 and must be maintained for the full duration of the Dataway operation, unless the state of the data source is changed by *S*2. The controller must initiate action concerned with the acceptance of data from the *R* lines at the time of the Strobe *S*1 and must not take irreversible action before this.

Table 4 —The Function Codes

Code *F*( )	Function	Use of *R* and *W* Lines	Function Signals *F*16	*F*8	*F*4	*F*2	*F*1	Code *F*( )
0	Read Group 1 register	Functions using the *R* lines	0	0	0	0	0	0
1	Read Group 2 register		0	0	0	0	1	1
2	Read and Clear Group 1 register		0	0	0	1	0	2
3	Read Complement of Group 1 register		0	0	0	1	1	3
4	Nonstandard		0	0	1	0	0	4
5	Reserved		0	0	1	0	1	5
6	Nonstandard		0	0	1	1	0	6
7	Reserved		0	0	1	1	1	7
8	Test Look-at-Me	Functions not using the *R* or *W*	0	1	0	0	0	8
9	Clear Group 1 register	lines	0	1	0	0	1	9
10	Clear Look-at-Me		0	1	0	1	0	10
11	Clear Group 2 register		0	1	0	1	1	11
12	Nonstandard		0	1	1	0	0	12
13	Reserved		0	1	1	0	1	13
14	Nonstandard		0	1	1	1	0	14
15	Reserved		0	1	1	1	1	15
16	Overwrite Group 1 register	Functions using the *W* lines	1	0	0	0	0	16
17	Overwrite Group 2 register		1	0	0	0	1	17
18	Selective Set Group 1 register		1	0	0	1	0	18
19	Selective Set Group 2 register		1	0	0	1	1	19
20	Nonstandard		1	0	1	0	0	20
21	Selective Clear Group 1 register		1	0	1	0	1	21
22	Nonstandard		1	0	1	1	0	22
23	Selective Clear Group 2 register		1	0	1	1	1	23
24	Disable	Functions not using the *R* or	1	1	0	0	0	24
25	Execute	*W* lines	1	1	0	0	1	25
26	Enable		1	1	0	1	0	26
27	Test Status		1	1	0	1	1	27
28	Nonstandard		1	1	1	0	0	28
29	Reserved		1	1	1	0	1	29
30	Nonstandard		1	1	1	1	0	30
31	Reserved		1	1	1	1	1	31

The *R* lines serve a few data receivers (typically only one controller) and many data sources.

5.4 Status Information

Status information is conveyed by signals on the Look-at-Me *L*, Busy *B*, Response *Q*, and Command Accepted *X* lines.

Copyright © 1982 IEEE All Rights Reserved

Copyright The Institute of Electrical and Electronics Engineers, Inc.
Provided by IHS under license with IEEE
No reproduction or networking permitted without license from IHS Not for Resale

5.4.1 Look-at-Me L

The Look-at-Me lines, like the *N* lines, are individual connections from each normal station to separate contacts at the control station (*L*1 from station 1, etc).

Any module may generate a signal on its individual line L_i to indicate that it requires attention. Modules that occupy more than one station may indicate different demands by signals on the appropriate *L* lines.

The *L* signal generated by a module may represent demands for attention originating from more than one Look-at-Me source (LAM source) in the module. A LAM structure by which various demands can be selected and grouped to form the *L* signal is shown in Fig 11 and described below. All modules that generate *L* have the mandatory features shown in Fig 11 and may incorporate additional features for more complex demand handling.

Individual bits of the LAM status register are set by the corresponding LAM sources, and are cleared by appropriate commands and by the initialize signal. The outputs (LAM status) may be examined collectively by reading the state of all outputs [Read Group 2 at *A*(12)], or individually by the command Test Status with the appropriate subaddress A(*i*). Each LAM status should be individually enabled and disabled (for example by a LAM mask) to form the corresponding LAM request. The LAM requests are examined collectively by reading the state of all LAM requests [Read Group 2 at *A*(14)], or individually by the command Test LAM with the appropriate subaddress A(*i*). The internal Look-at-Me signal (*L* signal), derived from the OR combination of the LAM requests, is tested by the command Test LAM, with subaddress *A*(*k*) distinguishing this from tests of individual LAM requests. Finally, the output of this signal as the Dataway *L* signal is inhibited while the module is addressed by *N*, possibly in conjunction with certain *F* and *A* codes or groups of codes. (See Section 5.4.1.3.)

SUPPLEMENTARY INFORMATION:

Examples of LAM Logic. Figs K5.4.1A–K5.4.1C are examples of LAM logic in modules. Fig K5.4.1A shows an example of LAM logic for a module with a single source of Look-at-Me. For modules having multiple sources of Look-at-Me, operations on the LAMs may be addressed via subaddresses (as in Fig K5.4.1B) or via bits in the data word associated with the operation (as in Fig K5.4.1C).

5.4.1.1 Look-at-Me: Clear, Disable, and Test

Provision must be made for resetting each bit of the LAM status register individually, either by a Clear Look-at-Me operation *F*(10) see Section 6.2.3), or by a Selective Clear Group 2 operation *F*(23) see Sections 5.4.1.2 and 6.3.6). All LAM status bits must be reset collectively by the Initialize signal (see Section 5.5.1).

If the LAM request calls for some specific action (for example, reading the contents of a data register), then the corresponding bit of the LAM status register should also be cleared when the appropriate Dataway operation is performed.

A module that has generated *L* = 1 must not clear the LAM status register until it receives an appropriate command or the Initialize signal.

Copyright © 1982 IEEE All Rights Reserved

Copyright The Institute of Electrical and Electronics Engineers, Inc.
Provided by IHS under license with IEEE
No reproduction or networking permitted without license from IHS Not for Resale

Each module that generates *L* should have a means of enabling and disabling the LAM requests. This may be done by loading and clearing a mask register, or by Enable and Disable commands.

All LAM requests that can be disabled by commands must also be disabled by the Initialize signal *Z*.

A module that generates *L* must have a means of testing the *L* signal by a Test Look-at-Me operation [Function code *F*(8) (see Section 6.2.1), with a subaddress distinguishing this from tests of individual LAM requests]. If there are several LAM sources, the corresponding LAM requests must also be capable of being examined either by Test Look-at-Me operations associated with appropriate subaddresses or by reading a LAM request pattern in a read operation.

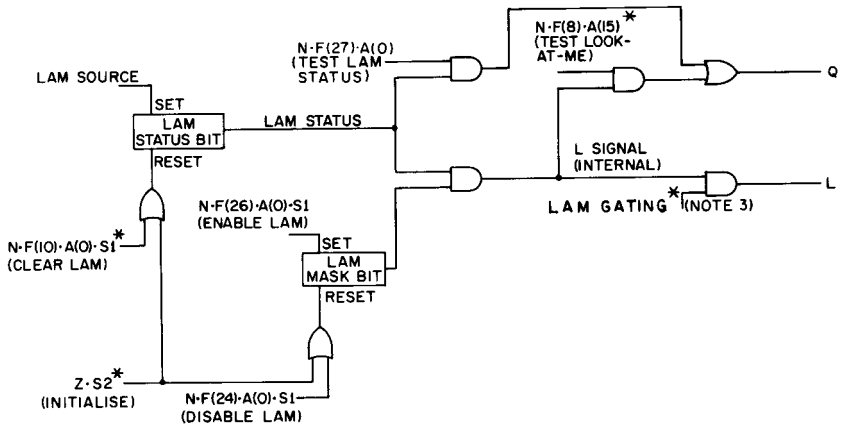

NOTES:

1 — Features mandatory for this LAM system shown with an asterisk.

2 — Subaddresses may be chosen arbitrarily, for example, to match subaddresses associated with the LAM sources. In this example, *A*(15) is shown for Test Look-at-Me for uniformity with more complex modules. See Figs K5.4.1A–K5.4.1C

3 — Some form of *L* inhibiting is required. See 5.4.1.3.

4 — Except for *Z* where the use of *S*2 is mandatory, either *S*1 or *S*2 may be used.

Figure K5.4.1A —Example of Single-Source Look-at-Me Logic

Copyright © 1982 IEEE All Rights Reserved

Copyright The Institute of Electrical and Electronics Engineers, Inc.
Provided by IHS under license with IEEE
No reproduction or networking permitted without license from IHS
Not for Resale

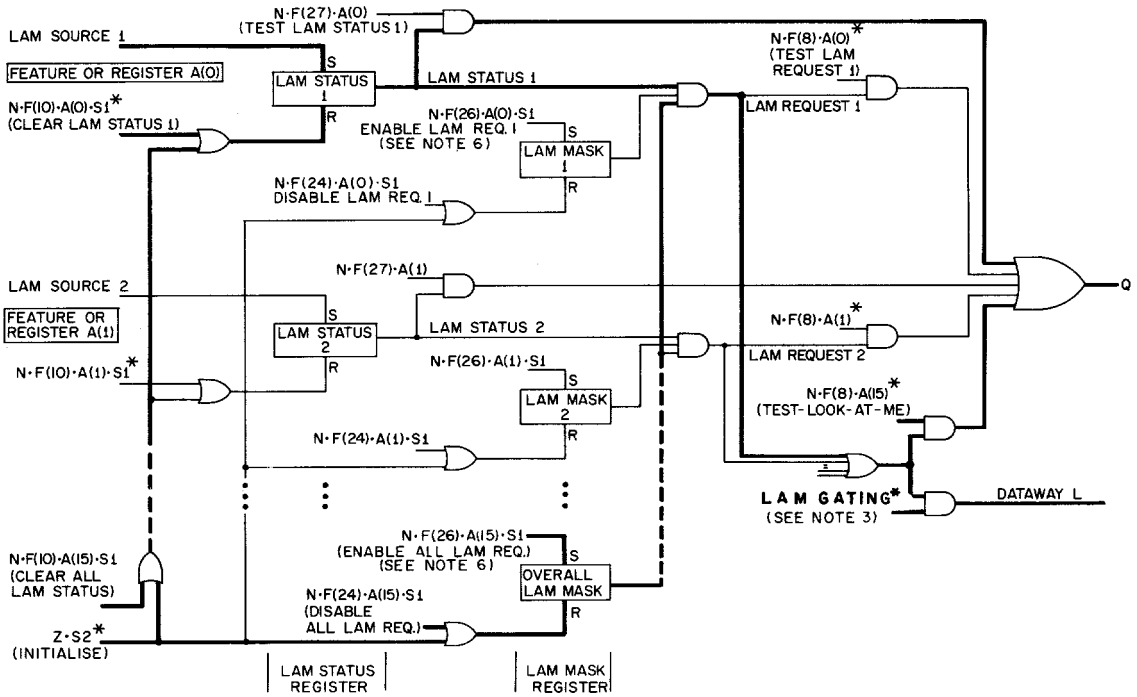

NOTES:

1—Mandatory features for a module which performs operations on LAMs via subaddresses are shown with an asterisk.

2—Although choice of subaddress is arbitrary, it is generally useful to use the same subaddress for the commands associated with a given LAM source. For example, the figure shows subaddress *A*(0) used for LAM source 1; *A*(1) for LAM source 2, etc. Subaddress *A*(15) is suggested for operations which affect all LAM sources, for example, Enable/Disable all LAM requests and Test *L* signal.

3 and 4—See Notes 3 and 4 for Fig K5.4.1A.

5—The heavy lines facilitate comparison with the single-source logic shown in Fig K5.4.1A.

6—For modules that include both individual LAM masks and an overall LAM mask (as above), the module information summaries must point out that an individual LAM request is enabled only if its individual mask and the overall mask have both been set.

Figure K5.4.1B —Example of Multiple-Source Look-at-Me Logic Showing Operations on LAMs via Subaddresses

Copyright © 1982 IEEE All Rights Reserved

Copyright The Institute of Electrical and Electronics Engineers, Inc.
Provided by IHS under license with IEEE
No reproduction or networking permitted without license from IHS
Not for Resale

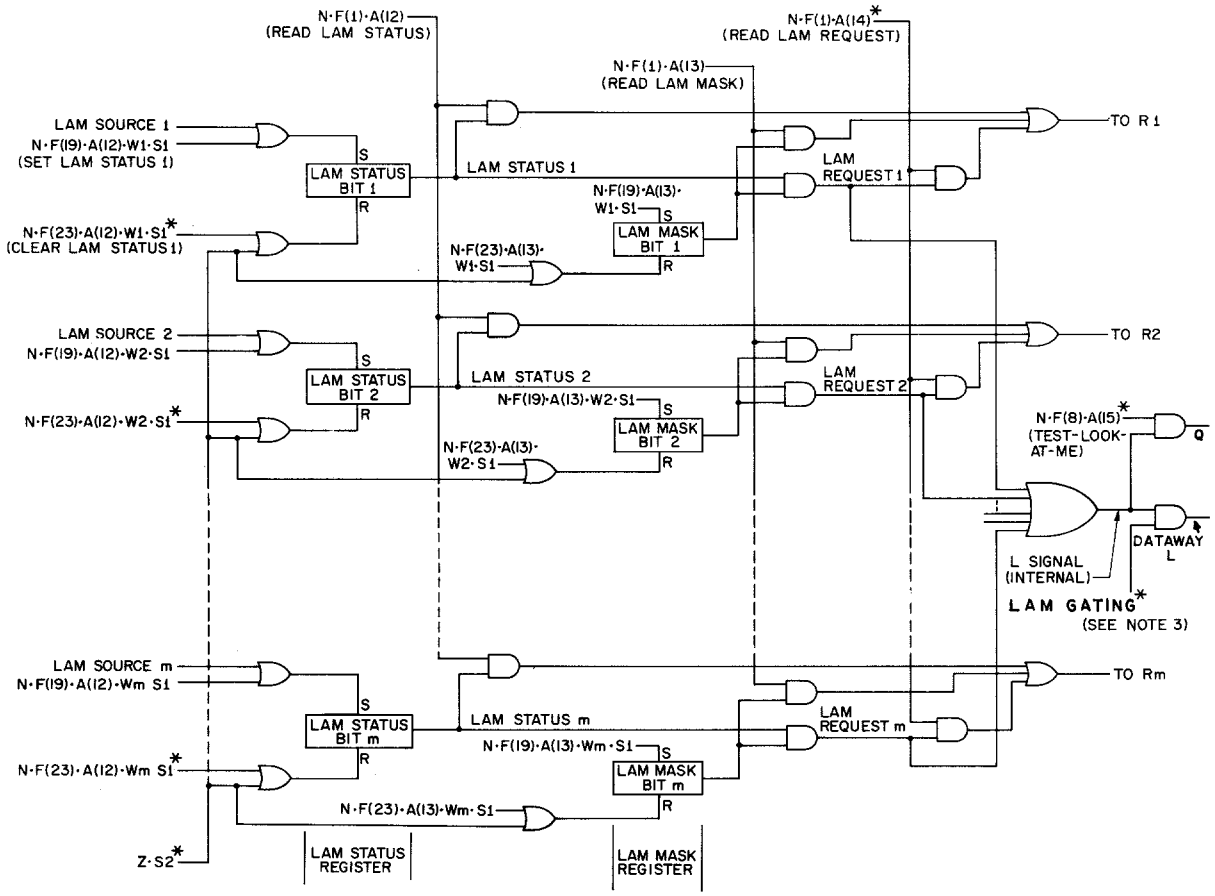

NOTES:

1—Features which are mandatory for a module which performs operations on LAMs via databits are shown with an asterisk.

2—Although *A*(15) is shown, choice of subaddress for Test Look-at-Me is arbitrary. All other subaddresses shown are those recommended in Section 5.4.1.2.

3 and 4—See Notes (3) and (4) for Fig K5.4.1A.

5—Appropriate logic should be provided to ensure that LAM Status Bits cannot be set during Dataway command cycles for Read LAM status and Read LAM request.

Figure K5.4.1C —Example of Multiple-Source Look-at-Me Logic Showing Operations on LAMs via Databits

5.4.1.2 Look-at-Me: Commands for Access.

Modules may contain registers for LAM information. These registers are not mandatory but if included they should be accessed as Group 2 registers at the following subaddresses:

LAM status register	*A* (12)
LAM mask register	*A* (13)
LAM request register	*A* (14)

Copyright © 1982 IEEE All Rights Reserved

Copyright The Institute of Electrical and Electronics Engineers, Inc.
Provided by IHS under license with IEEE
No reproduction or networking permitted without license from IHS
Not for Resale

Corresponding bit positions should be associated with the same LAM source.

The state of each data bit read from the LAM status or LAM request register is the same as the state of the *Q* response that would be obtained by a Test Status or Test Look-at-Me operation.

The data word read from *A*(12) should have LAM status information in the low-order bits and may also contain other status information. Each bit of the data word loaded into *A*(13) should be in the 1 state to enable the corresponding LAM request, and in the 0 state to disable it.

The operations used to access LAM information may be divided into two classes. One class consists of Read *F*(1), Write *F*(17), Clear *F*(11), Selective Set *F*(19), and Selective Clear *F*(23) addressed to the Group 2 LAM registers described above. This class is preferred for operations on modules with many LAM sources. The other class consists of Clear LAM *F*(10), Enable *F*(26), Disable *F*(24), Test Status *F*(27), and Test LAM *F*(8) addressed to specific demands. This class is preferred for modules with few LAM sources. In the one class a LAM source, LAM (*i*), is associated with bit position (*i*) in data words, and in the other class with subaddress *A*(*i*). For ease of programming it is recommended that all the operations related to a particular LAM source should belong to only one class.

5.4.1.3 Look-at-Me: Gating

When a module that is generating $L_i = 1$ receives a command that will cause it to cease doing so, it must inhibit the *L* signal or the appropriate LAM request. The inhibit condition must be effective before Strobe *S*1 and must be maintained until the end of the Dataway operation.

This requirement may be met very simply by inhibiting the *L* signal output when a module is addressed by any command ($L_i = 0$, when $N_i = 1$). Unaddressed modules can thus initiate $L_i = 1$ at any time, but addressed modules cannot do so until the end of the current Dataway operation.

The requirements may be met more precisely by inhibiting only those LAM status signals that are canceled by the current command. The ability to initiate $L_i = 1$ during a Dataway operation is thus extended to all LAM requests that are not being canceled. This requires the recognition of $N_i = 1$ with the specific functions and subaddresses, and the generation of appropriate inhibit conditions.

The requirement may be interpreted in ways intermediate between these extremes. For example, the ability to initiate $L_i = 1$ can be extended to all LAM requests during most Dataway operations if the *L* signal output is inhibited when the module is addressed by $N_i = 1$ together with appropriate, easily identifiable groups of functions and subaddresses.

The mandatory statement above replaces the earlier requirement in EUR 4100e (1969) that all modules gate off their *L* signal output during every operation ($L_i = 0$, when $B = 1$). It allows *L* signals to be initiated at any time, maintained continuously, and removed in advance of Strobes *S*1 and *S*2. This counteracts delays elsewhere in systems and leads to improved performance in handling demands for attention.

Units conforming to this standard and to the earlier requirement in EUR 4100e (1969) can generally be used together in systems where the improved performance is not required.

5.4.1.4 Look-at-Me: Use for Operation Synchronization in Block Transfers, Supplementary Information.

A module which is using a LAM for synchronizing individual operations of a block transfer sets LAM = 1 only when it is ready to effect the operation. During the associated Dataway cycle, the module sets LAM = 0 unless it is ready to effect another transfer.

Modules designed with this feature should have a means of patching this synchronizing signal onto the *L* line of the module, onto a patch pin, or onto a panel connector.

Copyright © 1982 IEEE All Rights Reserved

Copyright The Institute of Electrical and Electronics Engineers, Inc.
Provided by IHS under license with IEEE
No reproduction or networking permitted without license from IHS Not for Resale

This synchronization method is equally applicable to Stop and Stop-on-Word operations. (See sections 5.4.3.3 and 5.4.3.4.)

5.4.2 Busy B.

The Busy signal is used to interlock various aspects of a system that can compete for the use of the Dataway. The signal $B = 1$ indicates to all units that a Dataway operation is in progress.

> The Busy signal $B = 1$ must be generated during each Dataway command operation (when N signals are also generated) and during unaddressed operations (when Z or C are generated).

5.4.3 Response Q.

During every command operation the addressed module may generate a signal on the Q bus line to indicate the status of any selected feature of the module.

> The controller must initiate action concerned with the acceptance of the status information from the Q line at the time of Strobe $S1$ and must not take irreversible action before this.
>
> In read and write operations (see Sections 6.1 and 6.3) addressed modules must establish the signal $Q = 0$ or $Q = 1$ before Strobe $S1$ and must maintain it until at least Strobe $S2$.

In Test Look-at-Me operations (see Section 6.2.1) addressed modules may initiate the Q signal at any time during a Dataway operation if the status of the appropriate LAM request changes. If $Q = 1$ has been initiated, it will remain static until the end of the operation since this command is not allowed to reset LAM status.

In all operations other than read, write, and Test Look-at-Me the Q signal is permitted to change at any time. There is a risk that status information will be missed if $Q = 1$ is initiated between Strobes $S1$ and $S2$ during an operation in which the module resets the status condition at the time of Strobe $S2$.

In any operation the Q signal conveys only one bit of information, which should be clearly defined for each subaddress and function code used by the module.

Examples of the use of the Q signal during read and write operations are given in Sections 5.4.3.1, 5.4.3.2, and 5.4.3.3, which define three methods of transferring blocks of data. These three methods are summarized in the following table. However, the status information transmitted by the addressed module during read and write operations is not restricted to these examples.

Response	Q Mode		
	Address Scan	Repeat	Stop
$Q = 1$	register present	register ready	within block
$Q = 0$	register absent	register not ready	end of block

[See ANSI/IEEE Std 683-1976 (R 1981)]

Copyright © 1982 IEEE All Rights Reserved

Copyright The Institute of Electrical and Electronics Engineers, Inc.
Provided by IHS under license with IEEE
No reproduction or networking permitted without license from IHS Not for Resale

5.4.3.1 Use of Q for Block Transfers: Address Scan Mode

If a module contains registers that are intended to be accessed sequentially in Address Scan mode, they must be located at consecutive subaddresses starting at $A(0)$. During read and write operations the module must generate $Q = 1$ at all subaddresses at which these registers are present and $Q = 0$ at the first unoccupied subaddress, if any. A module with n such registers must therefore generate $Q = 1$ at $A(0)$ to $A(n - 1)$. If $n < 16$, the module must generate $Q = 0$ at $A(n)$.

The Address Scan mode of block transfer is used for data transfers to or from an array of modules that do not necessarily occupy consecutive stations or all subaddresses. The state of Q during each operation is used by the controller to determine the station number and subaddress for the next operation. When $Q = 1$, the subaddress is incremented, with carry-over into the station number. When $Q = 0$, the subaddress is set to $A(0)$, and the station number is incremented. This allows unoccupied stations within an array.

The block transfer may be terminated by the controller on reaching a specified word count (recommended) or address.

5.4.3.2 Use of Q for Block Transfers: Repeat Mode

If a module contains a register that is intended to be accessed in Repeat mode it must generate $Q = 1$ during a read or write operation if the register is ready to participate in a data transfer. It must generate $Q = 0$ during a read or write operation if the register is not ready to participate in a data transfer.

Copyright © 1982 IEEE All Rights Reserved

Copyright The Institute of Electrical and Electronics Engineers, Inc.
Provided by IHS under license with IEEE
No reproduction or networking permitted without license from IHS Not for Resale

Table K5.4.3.5 —Single Module, Single Address Block Transfers

Part I—Method for Performing Stop mode CAMAC Block Transfers **(This is the recommended mode)**

Q	**Position of operation relative to a block of *n* words**	**Transfer Direction**	**Module**	**Interface**	**Computer**
$Q = 1$	1 to n	Read	Data word transmitted	Pass data word Keep channel open	Store data word in computer memory
		Write	Data word accepted	Data word already passed. Keep channel open	Data word already delivered
$Q = 0$	$n + 1$	Read	No significant data word transmitted	Do not pass data word. Close channel	No action required
		Write	Data word not accepted	Close channel. Data word already passed	Data word to be recovered for retransmission

Part II—Method for performing Stop-on-Word mode CAMAC Block Transfers.
This is a special-application mode only. (Cannot be used with many earlier interfaces and modules.)

Q	Position of operation relative to a block of *n* words	Transfer Direction	Module	Interface	Computer
$Q = 1$	1 to $(n - 1)$	Read	Data word transmitted	Pass data word. Keep channel open	Store data word in computer memory
		Write	Data word accepted	Data word already passed. Keep channel open	Data word already delivered
Q = 0	n	Read	Word* transmitted	Pass word.* Close channel	Store word* in computer memory
		Write	Word* accepted	Close channel. Word* already passed	Word* already delivered

*The word may be a data-word, status-word or a dummy word.

The Repeat mode of block transfer is used when data transfers to or from one register have to be related to the state of readiness of the register or of associated external equipment. The response $Q = 0$ indicates that the same operation should be repeated until the register becomes ready ($Q = 1$). The operation may be repeated continuously if the module samples the state of readiness in a way that tolerates the *B* and *N* signals being maintained continuously. There is a risk that a system will lock up if an operation is repeated indefinitely while waiting for $Q = 1$.

5.4.3.3 Use of Q for Block Transfers: Stop Mode

If a module contains a register that is intended to be accessed in Stop mode, it must generate $Q = 1$ during each read or write operation while the block of data is being transferred and must generate $Q = 0$ during any further operations after the end-of-block condition has been encountered.

The Stop mode of block transfer is used when data transfers to or from one register have to be terminated by an end-of-block indication from the module. A block of data transfers accompanied by $Q = 1$ is followed by at least one further operation accompanied by $Q = 0$ to indicate end-of-block.

Copyright © 1982 IEEE All Rights Reserved

Copyright The Institute of Electrical and Electronics Engineers, Inc.
Provided by IHS under license with IEEE
No reproduction or networking permitted without license from IHS Not for Resale

5.4.3.4 Use of Q for Block Transfers: Stop-on-Word mode, Supplementary Information.

If a module contains a register intended to be accessed in Stop-on-Word mode, it generates $Q = 1$ on each read or write operation while the block of data is being transferred, except that it generates $Q = 0$ on the last data transfer within the block.

When data transfers to or from a module are to be terminated by an end-of-block indication from the module, the Stop mode (Section 5.4.3.3) is recommended. Stop-on-Word mode may be used for exceptional circumstances where Stop mode is inappropriate.

5.4.3.5 Use of Q for Block Transfers, Supplementary Information.

Table K5.4.3.5 summarizes the characteristics of modules and controllers to be used in Stop and Stop-on-Word modes. It also lists the expected action of the computer or other system controller that initiates the blocks.

5.4.4 Command Accepted X

Whenever a module is addressed during a command operation, it must generate $X = 1$ on the Command Accepted bus line if it recognizes the command as one that it is equipped to perform, either within the module or in association with external equipment. The signal on the *X* line must reach a steady state before *S*1 and must be maintained until *S*2. Controllers that accept the *X* signal must do so at the time of *S*I.

The signal $X = 0$ should indicate a serious malfunction, for example, a module that is not present, not powered, lacks external connections, or is not equipped to perform the required action. The action taken by the controller in response to $X = 0$ may, for example, be to call for intervention by the operator or operating system.

Modules designed earlier when the *X* line was reserved for future allocation can be adapted for use in systems that depend on $X = 1$ by generating $X = N_i$.

SUPPLEMENTARY INFORMATION:

Command Accepted X Disabling. CAMAC computer interfaces, (including crate controllers) that include provisions for monitoring the Command Accepted *X* response should also include a mode of operation in which an $X = 0$ response does not result in an automatic alarm. This mode is necessary to permit "normal" operation of a system that includes early plug-in units that do not have provision for generating or transmitting the Command Accepted signals. Such plug-in units always "respond" with $X = 0$. When performing an Address Scan block transfer, the combination $Q = 0$, $X = 0$ should not result in an automatic system alarm.

Interpretation of Command Accepted X Response for Q-Controlled Block Transfers

1) *Address Scan (Section 5.4.3.1)*. During the operation by a controller of an Address Scan algorithm, there are two conditions where $X = 0$ does not indicate a malfunction. In both these conditions, $Q = 0$ responses are also generated. This means that, during an Address Scan, controllers should interpret $X = 0$ as an indication of serious malfunction only if $Q = 1$. These two conditions are described as follows:
   As stated in Section 5.4.3.1, the addressing of each register in a sequence intended to be used in the Address Scan mode of block transfer must result in a response of $Q = 1$. The addressing of the first register location (if any) beyond the sequence must result in a $Q = 0$ response. This is the mechanism used to locate the end of the sequence. If the first location beyond the sequence is vacant, addressing it also results in an $X = 0$ response. However, if this register location is used for a non-Address Scan register, then, as it is addressed, an $X = 1$ response is proper, even though the *Q* response must be 0. ($Q = 1$, $X = 0$ is always a fault condition).
   The operation of an algorithm used by the controller during Address Scan may result in addressing an empty station. The response to such a command is always $X = 0$.

Copyright © 1982 IEEE All Rights Reserved

Copyright The Institute of Electrical and Electronics Engineers, Inc.
Provided by IHS under license with IEEE
No reproduction or networking permitted without license from IHS Not for Resale

2) *Repeat (Section 5.4.3.2).* During Repeat mode, the state of the *Q* response conveys information on the readiness of the addressed register to participate in a data transfer. (*Q* = 1 means ready; *Q* = 0 means not ready). Regardless of the logic state of the *Q* response, the Command Accepted response should be *X* = 1.
3) *Stop (Section 5.4.3.3).* During Stop mode the state of the *Q* response conveys information as to whether the transfer of the current data word to or from the addressed register is within or without a data block. (*Q* = 1 means within; *Q* = 0 means without.) Regardless of the logic state of the *Q* response, the Command Accepted response should be *X* = 1.

5.5 Common Controls Z, C, I.

During unaddressed Dataway operations either Initialize *Z* or Clear *C* is generated by the controller and received by each unit connected to the appropriate bus line.

The common control signal Inhibit *I* is not associated with Dataway operations. It may be generated at any time and is received by each unit connected to the *I* bus line.

The Initialize *Z* and Clear *C* signals must be accompanied by Busy *B* and Strobe *S*2 signals, in a timing sequence as described in Section 7.1.3.2 and shown in Fig 10. The sequence is permitted to include Strobe *S*1, but units must not rely on the generation of *S*1 with *Z* or *C*.

5.5.1 Initialize Z.

The Initialize signal is intended to be used during system startup.

Initialize must have absolute priority over other signals. In response to *Z* = 1 all data and control registers must be set to a defined initial state, all LAM status registers must be reset, and, if possible, all LAM requests must be disabled.

Units that generate *Z* must also initiate a sequence including Busy, Strobe *S*2, and Inhibit (see Section 5.5.2).

Units that accept *Z* must gate it with Strobe *S*2 as a protection against spurious signals on the *Z* line.

5.5.2 Inhibit I

The signal *I* = 1 must inhibit any feature to which it is connected in a module.

The designer is free to choose which activities (for example, data taking) within a module are inhibited by this signal. The signal may be gated or routed within the module, for example, as a result of a previous command or by patch wiring.

When any unit generates the Initialize signal *Z* = 1, it must also generate *I* = 1. The Inhibit signal accompanying *Z* must be established by time t_1 (see Fig 10) and must be maintained for at least the duration of the *Z* signal. All units that generate *I* and can maintain *I* = 1 must respond to *Z*·*S*2 by generating and maintaining *I* = 1 until specifically reset.

Copyright © 1982 IEEE All Rights Reserved

Copyright The Institute of Electrical and Electronics Engineers, Inc.
Provided by IHS under license with IEEE
No reproduction or networking permitted without license from IHS Not for Resale

5.5.3 Clear C

The signal *C* = 1 must clear all registers and bistables to which it is connected.

Units that generate *C* must also initiate a sequence including Busy and Strobe *S*2.

Units that accept *C* must gate it with Strobe *S*2 as a protection against spurious signals on the *C* line.

The designer is free to choose which registers and bistables are cleared in response to *C*·*S*2. The signal may be gated or routed within the module, for example, as a result of a previous command or by patch wiring.

5.6 Nonstandard Connections P1–P7.

Five contacts *P*1–*P*5 on the Dataway connector at each normal station, and seven contacts P*1*–P*7* at the control station, are available for unspecified uses.

5.6.1 Free Bus Lines P1, P2

The contacts *P*1 and *P*2 at all normal stations must be linked by two Free bus lines.

Each plug-in unit is permitted to generate signals on either or both of these lines, or to accept signals from them. Within the plug-in unit there must be means by which any access to these lines can be disconnected or disabled.

Signals on the Free bus lines must either conform to Section 7.1.4 and Table 7 (with distributed pull-ups and freedom to vary the number of inputs and outputs) or to Section 7.1.2 and Table 6 (with one pull up on each line, not necessarily in the controller, and with current standards as for Read or Write lines).

No standard uses are defined for the Free bus lines. Conflicts between various uses can be resolved by making appropriate disconnections within units (for example, by wired or plug-in links).

In early versions the contacts *P*1 and *P*2 at normal stations were defined as individual patch points. Therefore some older units may have used these contacts in ways inconsistent with the bused connections required by this standard.

5.6.2 Patch Contacts P3–P7.

Contacts *P*3–*P*5 at each normal station and *P*1–*P*7 at the control station are not wired to Dataway lines. They are available for patch connections to other of these contacts, to optional patch points on certain Dataway lines, to the 0 V line, or to external equipment.

Patch connections must not be essential for the operation of the main features of general-purpose units.

The signals on patch connections must conform to Section 7.1.4 and Tables 5 and 7.

The patch contacts on the Dataway connector socket may either be directly accessible for making patch connections or may be wired to separate patch points. An earthed patch point, or access to the 0 V line, should be provided at each station. Patch connections may also be made to the *I, C, N,* and *L* lines at each station, but the permitted loadings on these lines (see Table 6) restrict the number of such additional connections.

Copyright © 1982 IEEE All Rights Reserved

Copyright The Institute of Electrical and Electronics Engineers, Inc.
Provided by IHS under license with IEEE
No reproduction or networking permitted without license from IHS
Not for Resale

5.7 Power Lines

The Dataway must include lines for all the mandatory and additional power supplies shown in Table 1.

The Dataway need not include lines for the supplementary +6 V and −6 V supplies (*Y*2 and *Y*1), but its construction should be such that bus lines and wiring in accordance with Section 10. can be installed on *Y*1 and *Y*2 if required.

Details of the voltage tolerances and permitted loadings of the power lines are given in Section 8. See also Supplementary Information in Section 8. regarding supplementary 6 V power lines *Y*1 and *Y*2.

6. Dataway Commands

A command consists of signals on the Station Number lines, the Subaddress lines, and the Function lines. During each command operation the crate controller generates the appropriate command, accompanied by the Busy signal $B = 1$ and by the two Strobes *S*1 and *S*2. Data may be transferred on the Read or Write lines in response to the command. Modules generate the Command Accepted signal $X = 1$ when they recognize the command (see Section 5.4.4). Modules may also transfer one bit of status information on the Response line (see Section 5.4.3).

The following sections define the mandatory actions by modules and controllers in response to each command, including mandatory transfers of data and status information via the Dataway. The term register is used here, and in the summary of the Function codes in Table 4, to indicate an addressable data source or receiver, without necessarily implying that it has a data storage property.

During a Dataway command operation, modules and controllers must perform the actions specified for the particular command. They may also perform additional internal actions, but these must not involve transferring to or from the Dataway any data or status information other than that specified for the command. Additional internal actions must not convert one standard command into another standard command.

The function codes *F*(0)–*F*(3), *F*(9), *F*(11), *F*(16)–*F*(19), *F*(21), and F(23) allow the registers in a module to be divided into two distinct sets, known as Group 1 and Group 2, so that it is possible to operate on two sets of sixteen registers. Within each group the appropriate register is selected by the subaddress. Information concerning status or system organization, or requiring restricted access, should be held in Group 2 registers (for example, see Section 5.4.1.2).

If a module allows a descriptor (module characteristic) to be read, the command used should be Read Group 2 Register, $F(1)\cdot A(15)$.

6.1 Read Commands: Function Codes F(0)-F(7).

Read commands are identified by the combination $F16 = 0$ and $F8 = 0$ in the function code. All read commands involve the transfer of data and status information from a module to the controller via the Read, *Q*, and *X* lines (see mandatory statements in Sections 5.3.2, 5.4.3, and 5.4.4).

Recommendations for the use of the *Q* signal in Read operations are given in Section 5.4.3.

Copyright © 1982 IEEE All Rights Reserved

Copyright The Institute of Electrical and Electronics Engineers, Inc.
Provided by IHS under license with IEEE
No reproduction or networking permitted without license from IHS Not for Resale

6.1.1 Read Group 1 Register, Code F(0)

This command transfers to the controller the contents of a register in the first group in the module. The contents of the register are not changed.

The required register within the group is selected by the subaddress.

6.1.2 Read Group 2 Register, Code F(1)

This command transfers to the controller the contents of a register in the second group in the module. The contents of the register are not changed.

The required register within the group is selected by the subaddress.

6.1.3 Read and Clear Group 1 Register, Code F(2)

This command transfers to the controller the contents of a register in the first group in the module. The contents of the register are cleared at time *S*2.

The required register within the group is selected by the subaddress.

6.1.4 Read Complement of Group 1 Register, Code F(3)

This command transfers to the controller the ones complement of the contents of a register in the first group in the module. The contents of the register are not changed.

The required register within the group is selected by the subaddress.

The command is provided mainly as a means of error detection. A read transfer with *F*(0) or *F*(2) can be checked by preceding it with a transfer from the same register with *F*(3). The two data words received by the controller should be complementary. A write transfer with *F*(16) can be checked by following it with a read transfer from the module with *F*(3). The data words sent and received by the controller should be complementary.

6.1.5 Other Read Commands, Codes F(4)-F(7).

These commands transfer the contents of a register in the module to the controller. Codes *F*(4) and *F*(6) are available as non-standard functions. Codes *F*(5) and *F*(7) are reserved for extensions of the standard functions.

6.2 Control Commands: Function Codes F(8)-F(15).

This first group of control commands is identified by *F*8 = 1 and *F*16 = 0 in the function code. Information is not transferred on either the *R* or *W* lines. However, status information may be conveyed on the *Q* line in response to any of these commands. The signal on the *Q* line is permitted to change at any time. It is strobed into the controller at time *S*1 and may, except in operations with code *F*(8), be reset by strobe *S*2. There is a risk that information can be lost due to *Q* signals appearing between *S*1 and *S*2.

Copyright © 1982 IEEE All Rights Reserved

Copyright The Institute of Electrical and Electronics Engineers, Inc.
Provided by IHS under license with IEEE
No reproduction or networking permitted without license from IHS Not for Resale

6.2.1 Test Look-at-Me, Code F(8)

This command transfers to the controller a signal on the Response line *Q*, representing the state of the *L* signal or a LAM request in the module (see Sections 5.4.1 and 5.4.1.1). The response must be $Q = 0$ if the feature is in the 0 state or is prevented, by masking or gating, from contributing to a 1 state *L* signal. The LAM status must not be reset by this command.

The feature to be tested (the *L* signal or a particular LAM request) is selected by the subaddress.

6.2.2 Clear Group 1 Register, Code F(9)

This command clears the contents of a register in the first group in the module.

The required register within the group is selected by the subaddress.

6.2.3 Clear Look-at-Me, Code F(10)

This command resets a LAM status in the module (see Section 5.4.1).

The required LAM status is selected by the subaddress. The *Q* signal may indicate the status of any selected feature in the module.

6.2.4 Clear Group 2 Register, Code F(11)

This command clears the contents of a register in the second group in the module.

The required register within the group is selected by the subaddress.

6.2.5 Other Control Commands, Codes F(12)-F(15).

These commands do not transfer data on the *R* or *W* bus lines. Codes *F*(12) and *F*(14) are available for use as nonstandard functions. Codes *F*(13) and *F*(15) are reserved for extensions to the standard functions.

6.3 Write Commands: Function Codes F(16)-F(23).

Write commands are identified by the combination $F16 = 1$ and $F8 = 0$ in the function code. All write commands involve the transfer of data from the controller to a module via the Write bus lines, and status information from a module to the controller via the *Q* and *X* lines (see mandatory statements in Sections 5.3.1, 5.4.3, and 5.4.4).

Recommendations for the use of the *Q* signal in write operations are given in Section 5.4.3.

6.3.1 Overwrite Group 1 Register, Code F(16)

This command forces each bit of a register in the first group in the module to the same state as the corresponding data bit transmitted by the controller.

The required register within the group is selected by the subaddress.

The effect of this command is to write data bit W_i into bit M_i of the Group 1 register. Thus:

$M_i := W_i$

Copyright © 1982 IEEE All Rights Reserved

Copyright The Institute of Electrical and Electronics Engineers, Inc.
Provided by IHS under license with IEEE
No reproduction or networking permitted without license from IHS Not for Resale

6.3.2 Overwrite Group 2 Register, Code F(17)

This command forces each bit of a register in the second group in the module to the same state as the corresponding data bit transmitted by the controller.

The required register within the group is selected by the subaddress.

The effect of this command is to write data bit W_i into bit M_i of the Group 2 register. Thus:

$M_i := W_i$

6.3.3 Selective Set Group 1 Register, Code F(18)

This command operates on selected bit positions of a register in the first group in the module. The bit positions are selected by 1 bits in a data word transmitted by the controller, and their contents are set to the 1 state. The contents of unselected bit positions are unchanged.

The required register within the group is selected by the subaddress.

The effect of this command is to form the inclusive OR function of the data bit W_i and the bit M_i in the Group 1 register. Thus:

$M_i := W_i + M_i$

This can also be regarded as overwriting the 1 bits from the data word.

6.3.4 Selective Set Group 2 Register, Code F(19)

This command operates on selected bit positions of a register in the second group in the module. The bit positions are selected by 1 bits in a data word transmitted by the controller, and their contents are set to the 1 state. The contents of unselected bit positions are unchanged.

The required register within the group is selected by the subaddress.

The effect of this command is to form the inclusive OR function of the data bit W_i and the bit M_i in the Group 2 register. Thus:

$M_i := W_i + M_i$

This can also be regarded as overwriting the 1 bits from the data word.

6.3.5 Selective Clear Group 1 Register, Code F(21)

This command operates on selected bit positions of a register in the first group in the module. The bit positions are selected by 1 bits in a data word transmitted by the controller, and their contents are cleared to the 0 state. The contents of unselected bit positions are unchanged.

The required register within the group is selected by the subaddress.

The effect of this command is to form the function of the data bit W_i and the bit M_i in the Group 1 register:

$M_i := \overline{W}_i \cdot M_i$

Copyright © 1982 IEEE All Rights Reserved

--`,,`-`-`,,`,,`,`,,`---

Copyright The Institute of Electrical and Electronics Engineers, Inc.
Provided by IHS under license with IEEE
No reproduction or networking permitted without license from IHS Not for Resale

6.3.6 Selective Clear Group 2 Register, Code F(23)

This command operates on selected bit positions of a register in the second group in the module. The bit positions are selected by 1 bits in a data word transmitted by the controller, and their contents are cleared to the 0 state. The contents of unselected bit positions are unchanged.

The required register within the group is selected by the subaddress.

The effect of this command is to form the function of the data bit W_i and the bit M_i in the Group 2 register:

$M_i := \overline{W}_i \cdot M_i$

6.3.7 Other Write Commands, Codes F(20) and F(22).

These codes are available for use as nonstandard functions that operate on some or all bits of a register in the module in accordance with the data transmitted by the controller.

6.4 Control Commands: Function Codes F(24)-F(31)

This second group of control commands is identified by $F8 = 1$ and $F16 = 1$ in the function code. Information is not transferred on either the *R* or *W* bus lines. However, status information may be conveyed on the *Q* line in response to any of these commands. The signal on the *Q* line is permitted to change at any time. It is strobed into the controller at time *S*1 and may, except in operations with code *F*(27), be reset by Strobe *S*2. There is a risk that information can be lost due to *Q* signals appearing between *S*1 and *S*2.

6.4.1 Disable, Code F(24)

This command disables a feature of the module or masks off a signal. The action is initiated by Strobe S1 or S2.

The feature that is disabled, for example a LAM request or data input, is selected by the subaddress.

The Disable command is preferably used to disable a feature that is enabled by another command, such as Enable *F*(26).

(Compare with Execute, Section 6.4.2, which does not form a pair with Enable.)

6.4.2 Execute, Code F(25)

This command initiates or terminates an action when Enable or Disable is not appropriate. The initiation or termination occurs at the time of Strobe *S*1 or *S*2. The Execute command must not be used to set a feature of the module that requires a Disable command *F*(24) to reset it, nor to reset a feature that requires an Enable command *F*(26) to set it.

The action that is to be executed, or the feature of the module to which it is to be applied, is selected by the subaddress.

Execute may be used, for example, to initiate the generation of a pulse. The operation Increment Preselected Registers, which was defined for *F*(25) in earlier specifications, is one of the possible uses of the Execute command.

Copyright © 1982 IEEE All Rights Reserved

Copyright The Institute of Electrical and Electronics Engineers, Inc.
Provided by IHS under license with IEEE
No reproduction or networking permitted without license from IHS Not for Resale

6.4.3 Enable, Code F(26)

This command activates or enables a feature of the module or unmasks a signal. The action is initiated by Strobe *S*1 or *S*2.

The feature that is to be enabled, for example, a LAM request or data input, is selected by the subaddress.

The Enable command is preferably used to enable a feature that is disabled by another command, such as Disable *F*(24).

(Compare with Execute, Section 6.4.2, which does not form a pair with Disable.)

6.4.4 Test Status, Code F(27)

This command produces on the *Q* line a response corresponding to the status of a feature of the module. The feature, which is selected by the subaddress, may be a LAM status but must not be a LAM request or *L* signal (use Test Look-at-Me, Section 6.2.1). The feature must not be reset by the Test Status command.

6.4.5 Other Control Commands, Codes F(28) to F(31).

These commands do not transfer information on the *R* or *W* bus lines. Codes *F*(28) and *F*(30) are available for use as nonstandard functions. Codes *F*(29) and *F*(31) are reserved for extensions to the standard functions.

6.5 External Representation of the Command

A command is represented on the Dataway by the 5 b function code, the 4 b subaddress code, and signals on the appropriate *N* lines. The standard does not define the form in which the command should be transmitted externally (for example, between a computer and a crate). It will generally be convenient to use the same function and subaddress codes. An external 5 b code for *N* could be more convenient than the 24 b form used internally. For example, the binary code 00001 could correspond to Station Number 1 and therefore generate a signal on line *N*1. The other station numbers would then correspond to the binary codes in sequence.

Fewer than thirty-two codes are needed for addressing individual stations. Spare codes are therefore available, for example, to select multiaddressing modes. For example, one code may address all modules simultaneously, and another may allow the *N* lines to be controlled by a Station Number register. Other codes may be used to address registers, etc, within the controller.

7. Signal Standards

The standards specified in this section apply to signals into and out of plug-in units through:

1) The Dataway (including timing standards for the main signals associated with Dataway operations)
2) Nonstandard connections *P*1–*P*7 via the Dataway connector
3) Other connectors on the front panel or at the rear of the unit above the Dataway (with separate standards for terminated and unterminated digital signals and for analog signals)

The signal standards do not restrict the freedom of designers to use other signals or conventions within units.

Copyright © 1982 IEEE All Rights Reserved

Copyright The Institute of Electrical and Electronics Engineers, Inc.
Provided by IHS under license with IEEE
No reproduction or networking permitted without license from IHS Not for Resale

7.1 Digital Signals on the Dataway

The potentials for the binary digital signals on the Dataway lines have been defined to correspond with those for compatible current sinking logic devices [for example, the TTL (transistor-transistor logic) and DTL (diode-transistor logic) series]. The signal convention has, however, been chosen to be negative logic. The high state (more positive potential) corresponds to logic 0 and the low state (near ground potential) corresponds to logic 1. Intrinsic OR outputs are thus available from standard product ranges.

It is an essential feature of the Dataway that many units may have signal outputs connected to the Read, Command Accepted, and Response lines. Outputs onto these lines therefore require intrinsic OR gates. The same principle is extended to other lines (command, Write, etc) in order to allow more than one controller-like unit in a crate.

Signal outputs from all plug-in units onto all Dataway lines must be delivered through intrinsic OR gates. Each line must be provided with an individual pull-up current source to restore the line to the 0 state in the absence of an applied I signal.

The rise and fall times at signal outputs to Dataway lines must not be less than 10 ns, in order that cross-coupling of signals on the Dataway is not excessive.

7.1.1 Voltage Standards for Dataway Signals

All Dataway signals must conform to the voltage levels shown in Table 5.

Table 5 —Voltage Levels of Dataway Signals

	0 State	1 State
Accepted at input	+2.0 to +5.5 V	0 to +0.8 V
Generated at output	+3.5 to +5.5 V	0 to +0.5 V

7.1.2 Current Standards for Dataway Signals

All Dataway signals must conform to the standards for input and output currents shown in Table 6.

Copyright © 1982 IEEE All Rights Reserved

Copyright The Institute of Electrical and Electronics Engineers, Inc.
Provided by IHS under license with IEEE
No reproduction or networking permitted without license from IHS Not for Resale

Table 6 —Standards for Signal Currents Through Dataway Connectors and for Pull-Up Current Sources

DESIGNATION OF DATAWAY SIGNAL LINE	N	L	Q, R, X	W, A, F, B, Z, C, I	S1, S2
Line in '1' state at +0·5V Minimum current sinking capability (current drawn from line) of each unit generating the signal.	6·4mA	16mA		Controllers 1·6 (25-s)mA 36·8mA typical	
				Other Units	
				9·6+1·6(25-s)mA 48·0mA typical	58+1·6(25-s)mA 96·4mA typical
Line in '1' state at +0·5V Maximum current fed into line by each unit receiving the signal.	3·2mA each unit, 6·4mA total (See Note).	Unit with pull-up current source: 11·2mA		1·6s mA	
		Units without pull-up current source 1·6mA each: 4·8mA total (Note 1)			
Line in '0' state at +3·5V Minimum pull-up capability (current fed into line) of the unit with pull-up current source.	100(25-s)μA 2·3mA typical for controllers 2·4mA typical for other units				9·9mA
Line in '0' state at +3·5V Maximum current drawn from line by each unit without pull-up current source.	200μA	100s μA			
Location of pull-up current source	Unit generating the signal.	One unit receiving the signal.	Controller		
Pull-up current *Ip*, from positive potential Line in '1' state at +0·5V	6mA $\leqslant$ *Ip*9 $\leqslant$·6mA				38mA $\leqslant$ *Ip* $\leqslant$ 58mA
Pull-up current *Ip*, from positive potential Line in '0' state at +3·5V	2·5mA $\leqslant$ *Ip*				10mA $\leqslant$ *Ip*

Where appropriate, the current passing through the Dataway connector of a plug-in unit is defined as a function of the width of the unit (*s* stations). Values are given, as examples, for typical controllers (*s* = 2, control station and one normal station) the other units (*s* = 1).

NOTE — 1: Although only the controller and one module are connected directly to each *N* and *L* line, additional units may be connected via patch points or auxiliary connectors.

Copyright © 1982 IEEE All Rights Reserved

Copyright The Institute of Electrical and Electronics Engineers, Inc.
Provided by IHS under license with IEEE
No reproduction or networking permitted without license from IHS
Not for Resale

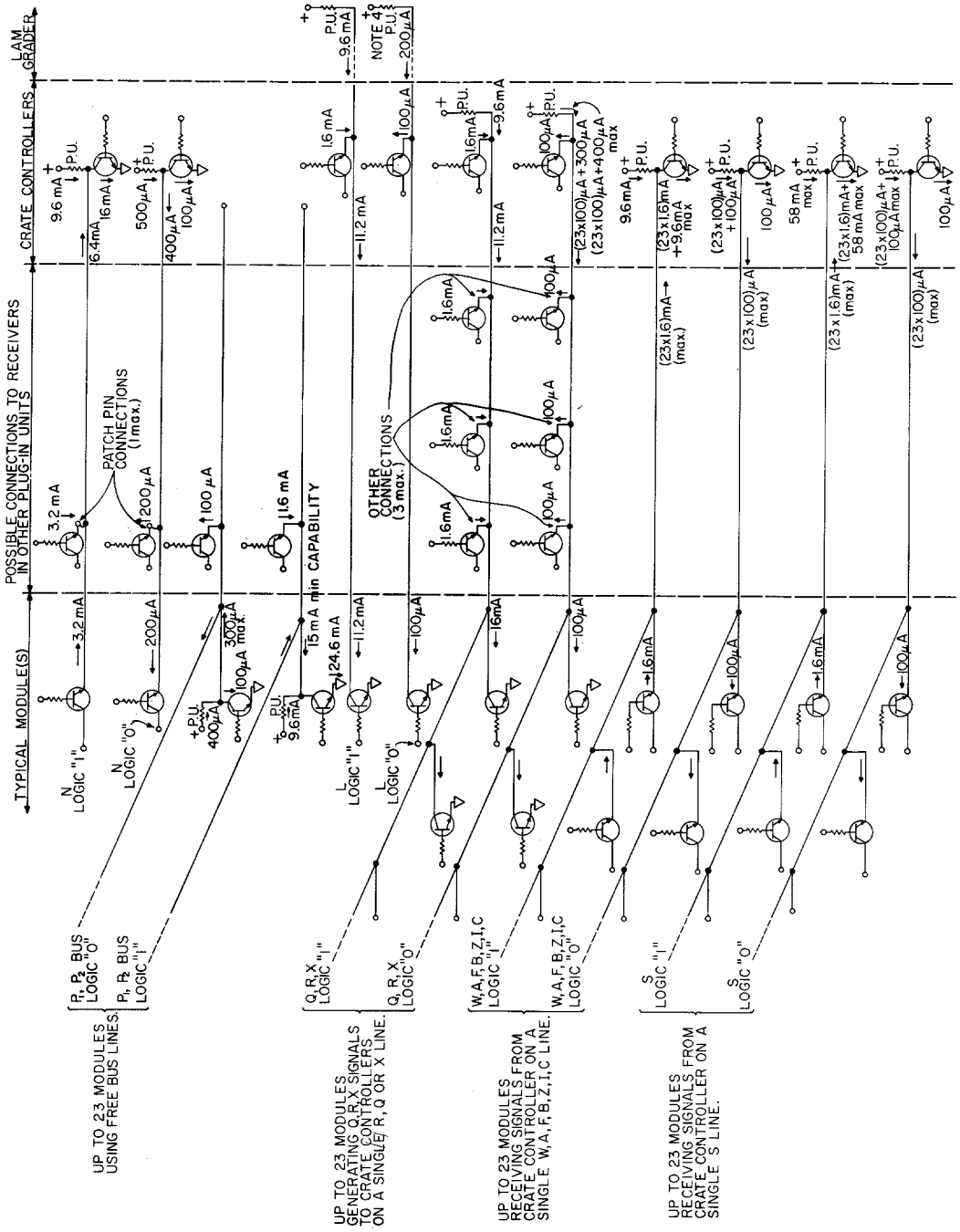

NOTES:

1 — Assumed

a)100 μA leakage per gate at logic 0

b)1.6 mA source per receiver at logic 1

c)9.6 mA maximum pull up current, PU = pull up resistor

d)crate controller two units wide, other modules one unit wide

2 — Maximum possible connections not shown

3 — The downward facing arrowhead indicates logic common via power return bus

4 — Pull-up capability must be 2.3 mA minimum

5 — P_1 and P_2 may also use W/R current distributions

Figure K7.1.2 —Current Distribution, CAMAC Dataway

Copyright © 1982 IEEE All Rights Reserved

Copyright The Institute of Electrical and Electronics Engineers, Inc.
Provided by IHS under license with IEEE
No reproduction or networking permitted without license from IHS

Not for Resale

Pull-up current sources for all standard Dataway bus lines are located in the controller (occupying the control station and at least one other station) so as to ensure that there is one and only one current source per line. The pull-up current sources for the *N* lines are located in the unit generating the signals and for the *L* lines in a unit receiving the signals so that the individual lines may be joined or grouped within these units if desired.

The Strobe signals *S*1 and *S*2, which time all actions in modules, have larger pull-up currents than other signals in order to give improved transition times and immunity against cross-coupling from other Dataway lines.

There is no restriction on the number of modules that can be addressed simultaneously (see 5.1.1). The signal output from modules to the Dataway *Q*, *R*, and *X* lines should therefore be capable of operating in intrinsic OR mode (see 7.1). Thus, it should be possible for one module to drive a line to the logic '1' state while all other modules are generating logic 'O' outputs to the same line.

SUPPLEMENTARY INFORMATION:

Current Distribution, CAMAC Dataway. Table 6 gives the standard for signal currents through Dataway connectors, and for pull-up current sources, while Table 7 gives the current standards for patch contacts. Fig K7.1.2 is included here to present these current standards pictorially, although the maximum possible connections are not shown.

7.1.3 Timing of Dataway Signals.

The sequence of events during a Dataway command operation is shown in Fig 9 by means of simplified signal waveforms. Section 7.1.3.1 is an explanation of Fig 9.

The sequence of events during a Dataway unaddressed operation is shown in Fig 10 and an explanation is given in Section 7.1.3.2.

In both figures the shaded areas indicate the permitted variation in the timing of each signal. The vertical edge of each shaded area corresponds to an ideal signal without delay. The sloping edge corresponds to a signal that reaches the appropriate threshold (0.8 V or 2.0 V) after the maximum permitted delay.

> The performance of all plug-in units and Dataway assemblies must be consistent with the timing requirements shown in Figs 9 and 10.

7.1.3.1 Timing of Dataway Command Operations.

The sequence of events during a command operation is shown in Fig 9.

During the operation command and data signals may take up either the 1 state or the 0 state. For convenience Fig 9 shows only signals that take up the 1 state, but similar timing requirements apply to those that take up the 0 state.

The Busy signal and the various command signals need not occur in exact synchronism, provided each is individually within the shaded areas of the diagram. Similar variation is permitted between the signals on the various data and status lines.

The *W*, *R*, *Q*, and *X* signals are shown as being maintained until the end of the operation, but a broken line indicates the earliest time at which they are permitted to change as a result of actions initiated by Strobe *S*2. During some operations the *Q* signal may change at any time.

The *L* signal is shown for the particular case of a module that inhibits its *L* signal output in response to a command that does not clear the LAM source (see Section 5.4.1.3). The signal $L_i = 1$ is therefore removed but reappears at the end of the operation.

Copyright © 1982 IEEE All Rights Reserved

Copyright The Institute of Electrical and Electronics Engineers, Inc.
Provided by IHS under license with IEEE
No reproduction or networking permitted without license from IHS Not for Resale

Time markers t_0 - t_{12} in Fig 9 indicate key points at which signal transitions are initiated or reach one of the threshold levels (0.8 V or 2.0 V).

At t_0 the transition of the Busy signal to the 1 state is initiated. Command signals on the *N*, *A*, and *F* lines also take up the 1 or 0 states as appropriate to the command.

At t_1 the Busy signal has reached the 0.8 V threshold, and all the command signals have reached the appropriate thresholds.

During the period t_1 - t_2 the addressed module responds to the command, and by t_2 the appropriate *X*, *Q* and data signals are initiated. By t_3 at the latest these signals have all reached the appropriate thresholds. Any *L* signals that are inhibited during the operation have reached the 2.0 V threshold by t_3.

The transition of the *S*1 signal to the 1 state is initiated at t_3 and has reached the 0.8 V threshold by t_4.

At t_5 the transition of the *S*1 signal to the 0 state is initiated and reaches the 2.0 V threshold by t_6.

The transition of the *S*2 signal to the 1 state is initiated at t_6 and has reached the 0.8 V threshold by t_7. Modules may respond to *S*2 by changing the state of the *R*, *Q*, and *X* signals.

Table 7 —Current Standards for Patch Contacts

State of Line	Current To and From Patch Connections	
	Outputs	**Inputs**
1 State at +0.5 V	Units must be capable of drawing more than 15 mA from connection when generating 1	Unit must not feed more than 2 mA into connection
	Unit must not feed more than 300 μA into connection when generating 0	
0 State at +3.5 V	Pull-up capability (current fed into connection):	100 μA minimum 300 μA maximum

The transition of the *S*2 signal to the 0 state is initiated at t_8 and has reached the 2.0 V threshold by t_9, which is the end of the Dataway operation.

At t_9 the transition of the *B* signal to the 0 state is initiated, and the command signals may also change from their established states.

At t_{10} the *B* signal and Command signals have reached the 2.0 V threshold. During the period t_{10} - t_{11} the module responds to the removal of the command. By t_{11} the transitions of the *W*, *R*, *Q*, and *X* signals to the 0 state are initiated, and the inhibit is removed from the *L* signal. By t_{12} the *L* signal has reached the 0.8 V threshold, and all other signals have reached the 2.0 V threshold.

Controllers must initiate the transitions of the command and Strobe signals at intervals not less than the minimum times shown in Fig 9. Modules must respond to the Command within the time t_1 - t_2 and to the strobes in the times t_4 - t_5 and t_7 - t_8. The electrical characteristics of the Dataway and connections from it into plug-in units must allow transitions between the two threshold levels to take place within the times t_0 - t_1, t_2 - t_3, etc.

The next Dataway operation must not start before t_9.

Copyright © 1982 IEEE All Rights Reserved

Copyright The Institute of Electrical and Electronics Engineers, Inc.
Provided by IHS under license with IEEE
No reproduction or networking permitted without license from IHS Not for Resale

In the extreme case when the next operation starts at t_9, the time markers t_0, t_1, t_2 of the new operation coincide with t_9, t_{10}, t_{11} of the previous operation. The command and data signals of one operation may thus be removed while those of the next operation are being established. The Busy signal may be maintained continuously during a sequence of consecutive Dataway operations. Under suitable conditions any command or data signals which have the same state during successive operations may also be maintained. In the extreme case of successive operations with the same command and data there could be a complete absence of signal transitions between t_0 and t_3.

7.1.3.2 Timing of Unaddressed Operations.

The sequence of events during an unaddressed Clear or Initialize operation is shown in Fig 10.

At t_0 the transition of the Busy signal to the 1 state is initiated. In a Clear operation the transition of the C signal is also initiated at this time. In an Initialize operation the transitions of the *Z* and *I* signals are initiated.

By t_1 the *B* signal and, as appropriate, either *Z* and *I* or *C* have reached the 0.8 V threshold.

The interval t_1–t_6 allows integration of the *Z* or *C* signals within the module if required.

At t_6 the transition of the *S*2 signal to the 1 state is initiated. The *S*2 signal is established and removed as described previously. (The *S*1 signal may be generated with timing relative to t_6 as shown in Fig 9.)

The *S*2 signal reaches the 2.0 V threshold by t_9. The transitions of the *B* signal and *C* or *Z* to the 0 state are initiated at t_9 and reach the 2.0 V threshold by t_{10}. The Inhibit signal may be removed at t_9 or, if possible, it is maintained in the 1 state as indicated by the broken line.

Table 8 —Unterminated Signals

Outputs*	
V_{out}	
Logic 1	Unit must generate 0 V to +0.5 V
Logic 0	Unit must generate +2.4 V to +5.5 V
I_{out}	
Logic 1 at +0.5 V	Unit must draw > 16 mA from connection
Logic 0 at +2.4 V	Unit must feed > 6 mA into connection
Inputs	
V_{in}	
Logic 1	Unit must accept 0 V to +0.8 V
Logic 0	Unit must accept +2.0 V to +5.5 V
I_{in}	
Logic 1 at +0.5 V	Unit must feed < 2.0 mA into connection
Logic 0 at +2.4 V	Unit must feed current into connection or draw < 100 μA from connection

*Not necessarily intrinsic OR

Copyright © 1982 IEEE All Rights Reserved

Copyright The Institute of Electrical and Electronics Engineers, Inc.
Provided by IHS under license with IEEE
No reproduction or networking permitted without license from IHS
Not for Resale

7.1.4 Digital Signals on Nonstandard Connections

Signals on the Free bus lines (contacts *P*1 and *P*2 at normal stations) must be generated from intrinsic OR outputs and conform to the voltage standards of Table 5. They must conform to the current standards of either Table 7 or Table 6, for Read or Write lines as appropriate (see also Section 5.6.1).

Signals on patch connections using contacts *P*3-*P*5 at normal stations or *P*1-*P*7 at the control station must be generated from intrinsic OR outputs and must conform to the voltage standards of Table 5 and the current standards of Table 7. Disconnected inputs must take up the 0 state.

In Table 7 each input and output has an individual pull-up current source to compensate for leakage current in the 0 state. This allows flexibility in the number of inputs and outputs that can be patched together.

7.2 Other Digital Signals

The standards defined as follows should normally be used for all terminated and unterminated digital signals via connectors on the front panel and at the back of plug-in units above the Dataway. There may, however, be special circumstances requiring the use of other signals, for example, to suit a specific equipment with which the plug-in unit is closely associated. (See also Appendix B.)

7.2.1 Unterminated Signals.

Unterminated signals should conform to the standard set out in Table 8, unless there are special reasons for using other standards.

Individual outputs must be able to withstand, without damage, a short-circuit to ground. Outputs through multiway connectors need not withstand a short circuit on all pins simultaneously.

Disconnected inputs must take up the 0 state.

Table 9 —Terminated Signals

	Logic 0	Logic 1
Outputs must deliver into 50 Ω	−2 to +2 mA Preferred −1 to +1 mA	−14 to −18 mA
Inputs must accept	−4 to +20 mA	−12 to −36 mA

7.2.2 Terminated Signals.

The characteristic impedance for terminated signals is 50 Ω. Signals terminated in 50 Ω should conform to the standard set out in Table 9, unless there are special reasons for using other standards.

Negative signs indicate currents flowing into an output circuit.

7.3 Analog Signals

Recommended standards for amplitude analog signals are to be processed later.

Copyright © 1982 IEEE All Rights Reserved

Copyright The Institute of Electrical and Electronics Engineers, Inc.
Provided by IHS under license with IEEE
No reproduction or networking permitted without license from IHS Not for Resale

8. Power Line Standards

The Dataway includes bus lines for mandatory, additional, and reserved power supplies.

Designers of plug-in units may assume that the mandatory lines (+24 V, +6 V, – 6 V, –24 V, and 0 V power return) are powered in every installation. (See also Section 10.)

The additional bus lines are provided for special requirements, for example, compatibility with the NIM System. There are heavy current lines for +12 V and –12 V dc, and a low-current line for an independent and isolated Clean Earth (ground) return *E*. The 12 V lines are not necessarily powered unless specifically required for use.

The voltages available to plug-in units at the contacts of each Dataway connector must be within the tolerances specified in Table 10. Individual plug-in units, and assemblies of plug-in units within a crate, must not exceed the current loadings specified in Table 10.

The Dataway power lines, and any wiring from them to the point at which power supplies enter the crate, must be capable of carrying the maximum current loadings permitted in the crate. The resistance between any point on the Dataway 0 V power return bus line and the point at which power supplies enter the crate must not exceed 2 mΩ.

The voltage tolerances specified in Table 10 do not define the performance of a suitable power supply unit directly. They take into account factors within the crate, for example, voltage drops due to the internal wiring of the crate and to the Dataway bus line under worst case distributions of current loading.

The maximum current loads for a plug-in unit will often be restricted by power dissipation (see Notes 2 and 3 in Table 10), or by the current-carrying capacity of the Dataway connector (Note 1) and the Dataway power lines. In a crate without forced ventilation the total power dissipation is restricted to 200 W, corresponding to 8 W per station. Under special circumstances this may be increased to 25 W per station, for example, by using forced ventilation or by taking care that the total dissipation is less than 200 W.

Copyright © 1982 IEEE All Rights Reserved

Copyright The Institute of Electrical and Electronics Engineers, Inc.
Provided by IHS under license with IEEE
No reproduction or networking permitted without license from IHS
Not for Resale

Table 10 —Power Line Standards

Nominal Voltage on Power Line in Crate	Voltage Tolerance at Dataway Connectors	Maximum Current Loads: In the Plug-in per unit width) [See Notes (1) and (3)] (A)	Maximum Current Loads: In the Crate [See Note (2)] (A)	Notes
Mandatory				
+24 V dc	±1.0 percent	1 A	6 A	
+6 V dc	±2.5 percent	2 A*	25 A*	
−6 V dc	±2.5 percent	2 A*	25 A*	
−24 V dc	±1.0 percent	1	6	
0 V				
Additional (as required)				
+12 V dc	±1.0 percent			As specified in TID-20893 (Latest revision)
−12 V dc	±1.0 percent			

Comments:

1-The current carried by each contact of the Dataway connector must not exceed 3 A.

2-The total power dissipation in a crate without forced ventilation must not exceed 200 W.

3-The power dissipation in each station must not exceed 8 W in general or 25 W under special circumstances.

*See Section 10.

SUPPLEMENTARY INFORMATION:

Power Line Standards. The use of +12 V and −12 V in plug-in units should be avoided since these are nonmandatory voltages and will usually not be available on the crate power buses.

Marking of Voltage and Current Requirements on Plug-in Units. The voltage and current requirements should be clearly and permanently marked on all plug-in units, preferably on the front panels. (See also Section 10.)

Preferred Power Supply Connector and Contact Assignments. A preferred power supply connector is designated for connecting power supplies to the Dataway power lines. The connector is listed in Appendix C, together with contact assignments. Typical power bus and power return bus feed and sense wiring, consistent with these contact assignments, is shown in Figs D-1 and D-6 of Appendix D.

Typical Power Supply and Ventilation Unit. Appendix D describes a commonly used power supply and ventilating unit for CAMAC applications.

9. Forced Air Ventilation (Supplementary Information)

Temperature-rise measurements and experience with operating systems have shown that forced air ventilation is generally necessary.

Copyright © 1982 IEEE All Rights Reserved

--`,,-`-`,,`,,`,`,,`---

Copyright The Institute of Electrical and Electronics Engineers, Inc.
Provided by IHS under license with IEEE
No reproduction or networking permitted without license from IHS Not for Resale

10. Use of Supplementary 6 V Power (Bus Lines Y1, Y2)

In special cases, plug-in units may be used that draw more than 3 A at +6 V or −6 V.

Such plug-in units are considered special, but they must comply with the current rating for Dataway connector contacts as given in Note 1 of Table 10. The total power dissipation in the station or stations occupied by the plug-in unit must be consistent with Note 3 of Table 10.

They must draw their excess (supplementary) 6 V power, not to exceed 3 A per contact, through the *Y*1 and *Y*2 contacts. The total return current in each 0 V contact, including any current from the 24 V and 12 V lines, must not exceed 3 A per contact.

In order to meet this requirement the current distribution between the two 0 V contacts may need to be controlled. An example of a suitable circuit is shown in Fig 12.

Plug-in units requiring supplementary 6 V power should only be installed in special crates in which the *Y*1 and *Y*2 contacts are bussed and wired to provide the necessary power. (See also 5.7.)

Plug-in units requiring supplementary 6 V power must have the supplementary (*Y*1,*Y*2) voltage and current requirements clearly and permanently marked on the front panel.

Crates equipped with *Y*1 and *Y*2 bus lines and wired for supplementary 6 V power must be clearly marked to indicate this.

The mandatory front panel markings showing supplementary power requirements should be reinforced by a conspicuous warning on the plug-in unit (for example, on the side panel), that it can only be used in crates equipped with *Y*1 and *Y*2 supplementary power.

Copyright © 1982 IEEE All Rights Reserved

Copyright The Institute of Electrical and Electronics Engineers, Inc.
Provided by IHS under license with IEEE
No reproduction or networking permitted without license from IHS Not for Resale

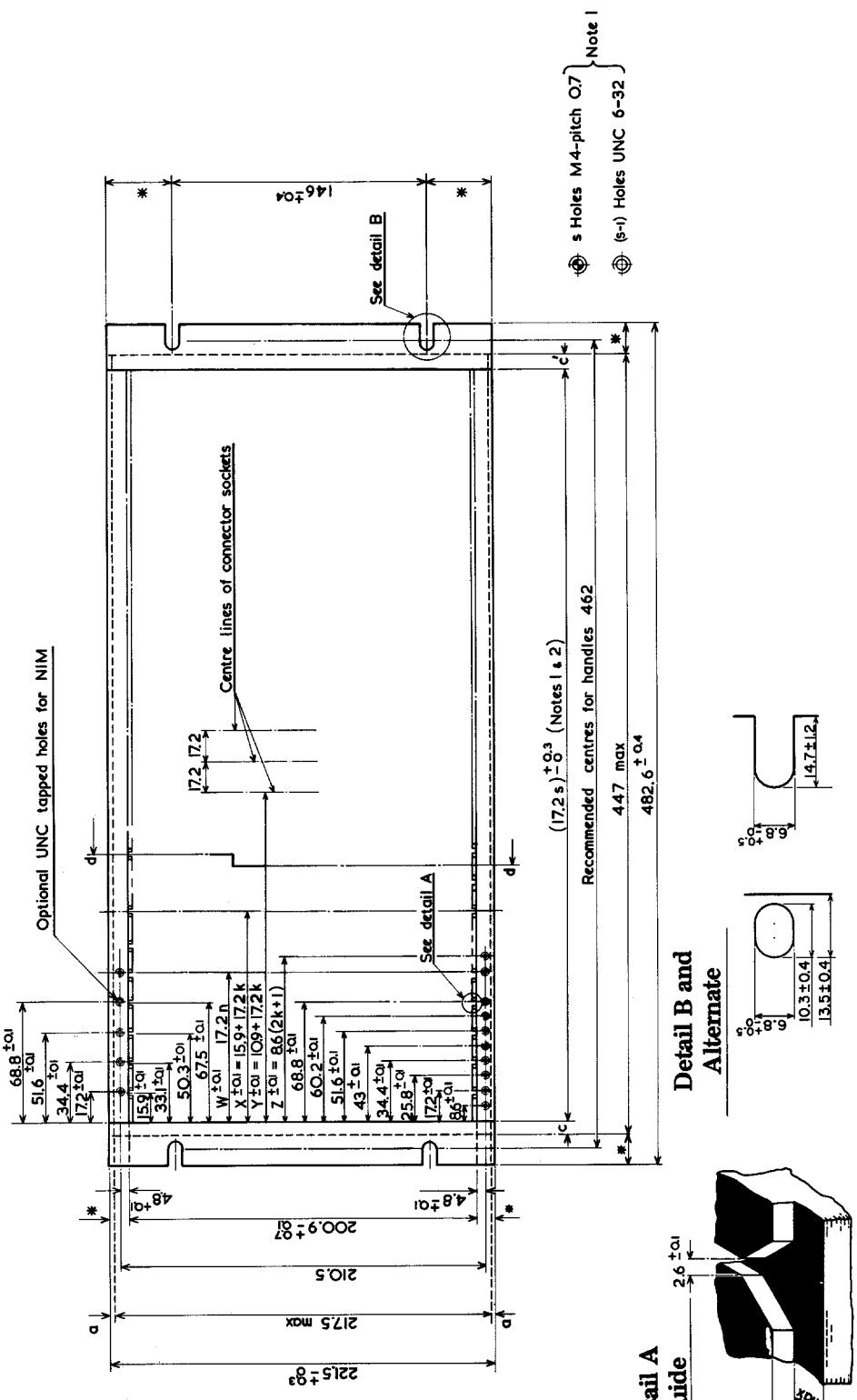

Figure 1 —Unventilated Crate: Front View
k = 0, 1, 2 ··· (s — 1); n = 1, 2, 3 ··· (s — 1)

Copyright © 1982 IEEE All Rights Reserved

Copyright The Institute of Electrical and Electronics Engineers, Inc.
Provided by IHS under license with IEEE
No reproduction or networking permitted without license from IHS
Not for Resale

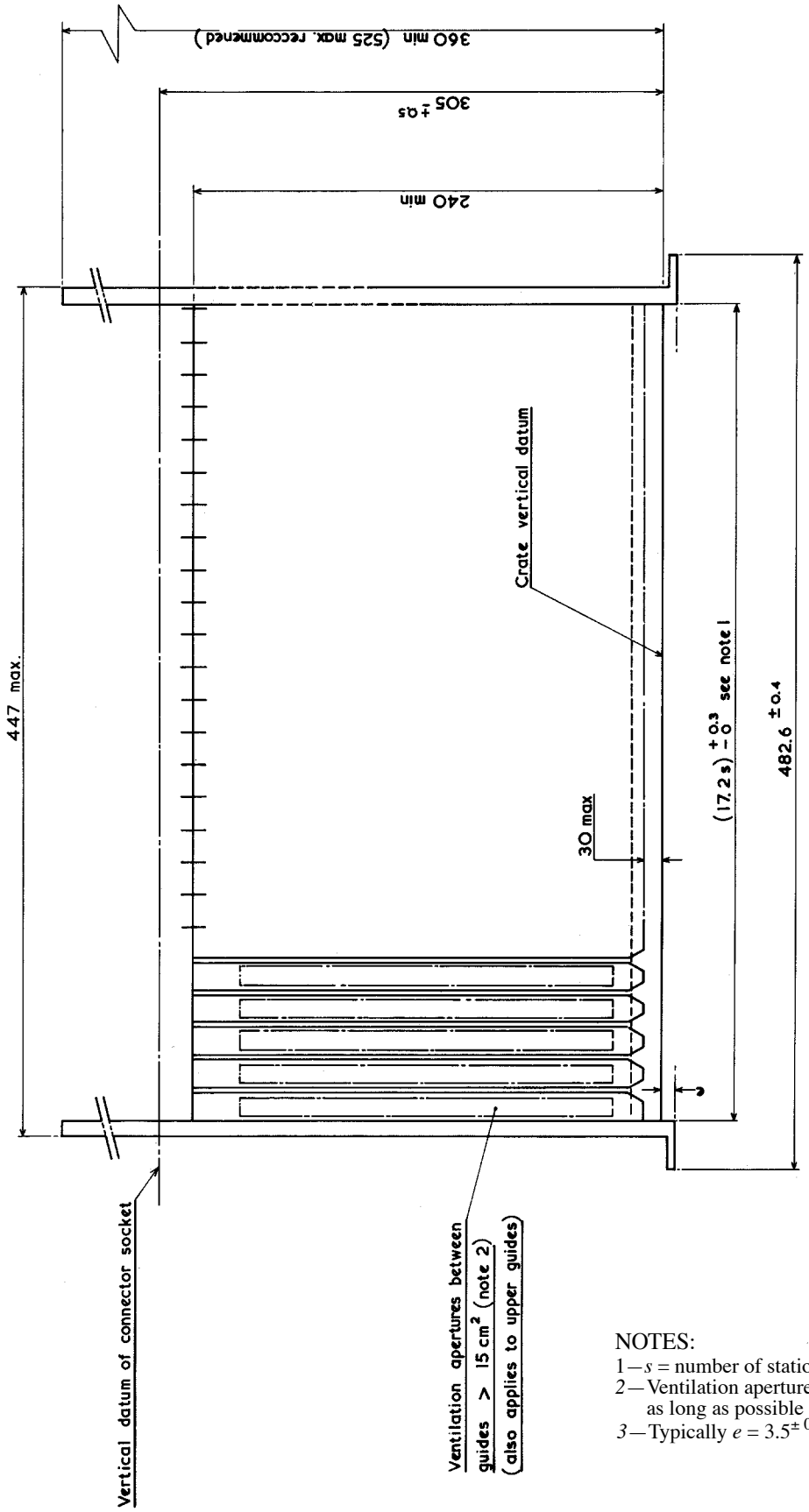

NOTES:
1—*s* = number of stations for plug-in units
2—Ventilation apertures between guides to be as long as possible
3—Typically $e = 3.5^{\pm 0.6}$

Figure 2 —Plan View of Lower Guides in Crate

Copyright © 1982 IEEE All Rights Reserved

Copyright The Institute of Electrical and Electronics Engineers, Inc.
Provided by IHS under license with IEEE
No reproduction or networking permitted without license from IHS
Not for Resale

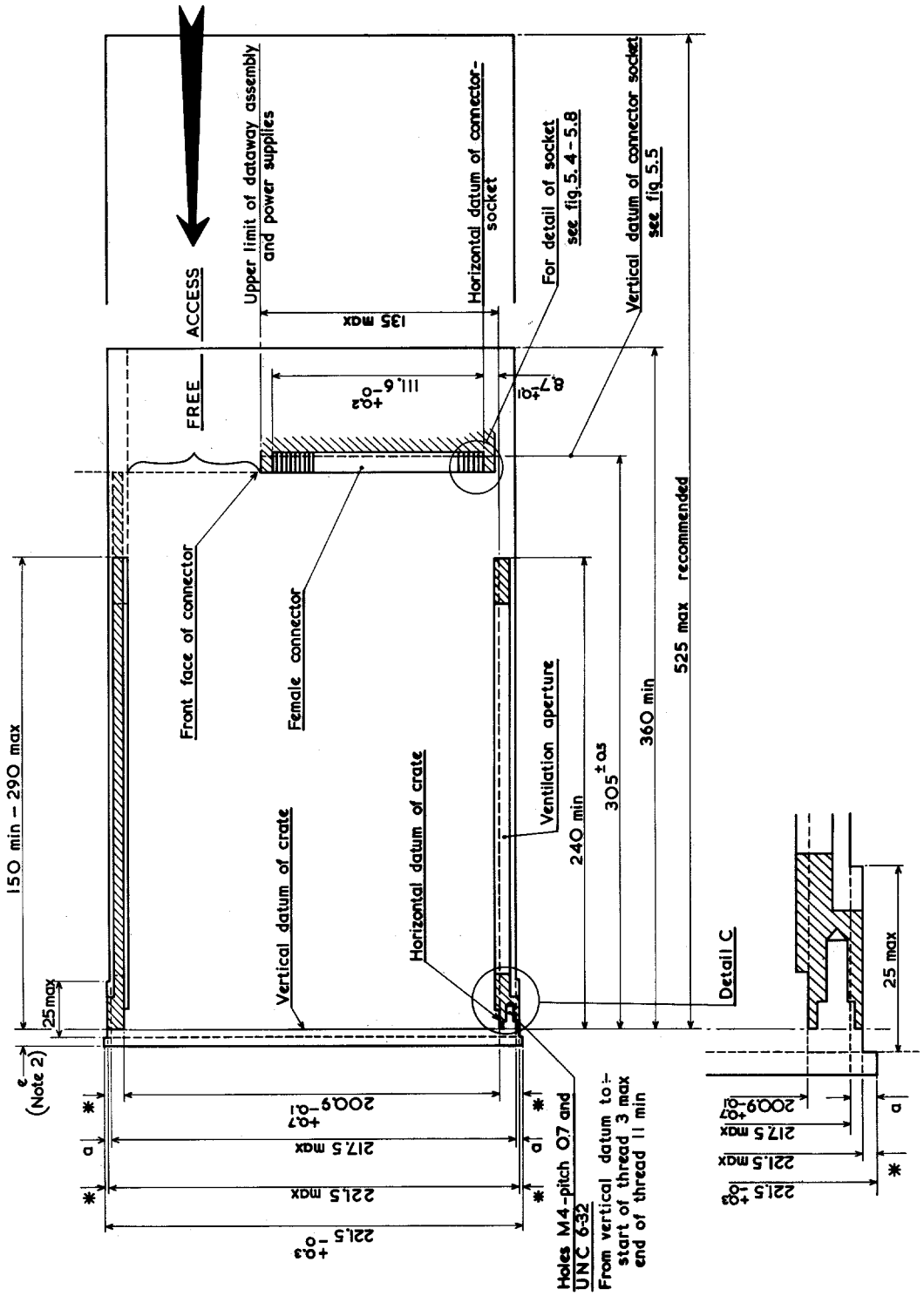

NOTES:
*1—Undimensioned differences to be equally disposed
2—Typically $e = 3.5^{\pm 0.6}$

Figure 3 —Crate Side View: Section d-d (Fig 1)

Copyright © 1982 IEEE All Rights Reserved

Copyright The Institute of Electrical and Electronics Engineers, Inc.
Provided by IHS under license with IEEE
No reproduction or networking permitted without license from IHS
Not for Resale

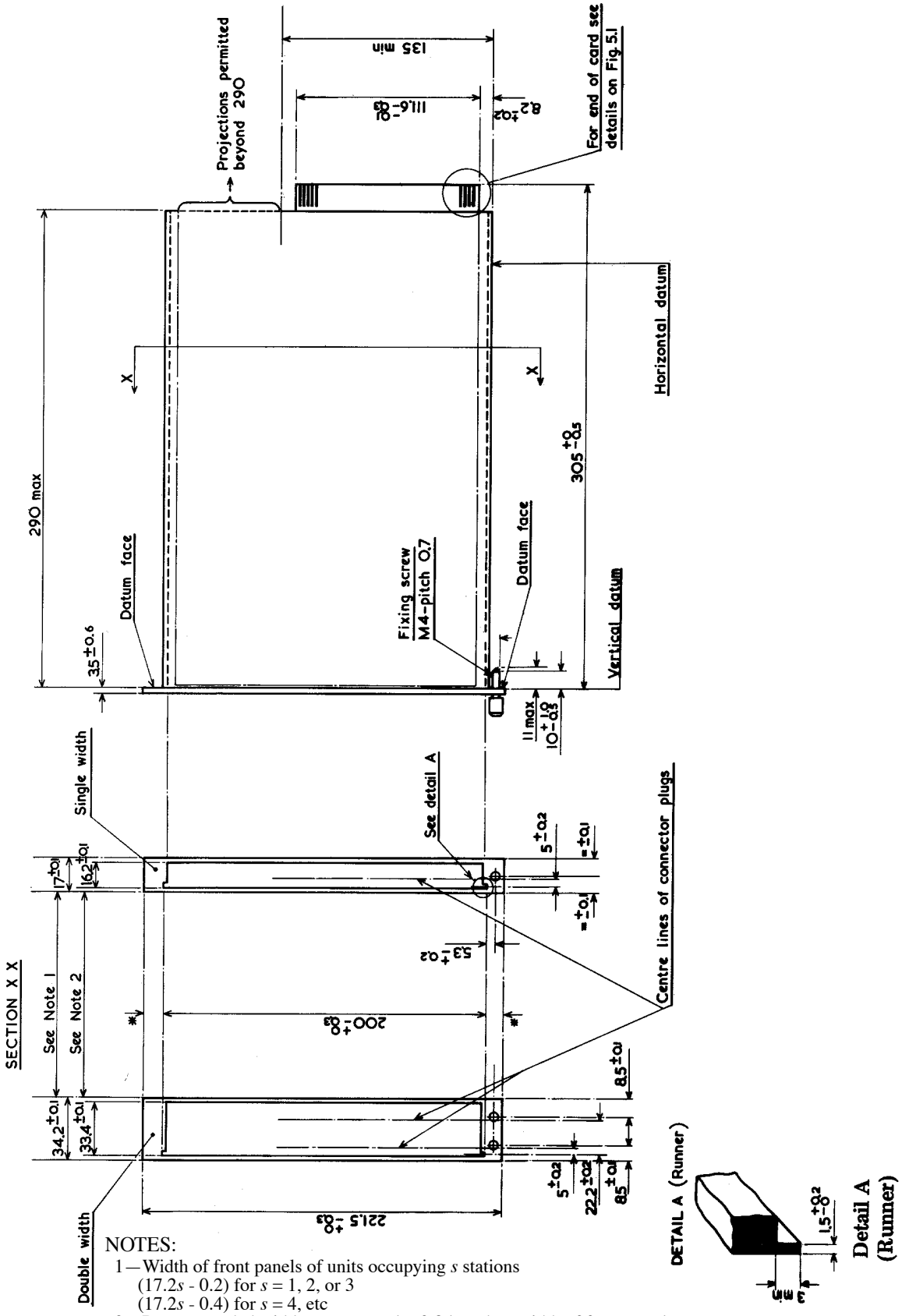

NOTES:

1—Width of front panels of units occupying *s* stations
(17.2*s* - 0.2) for *s* = 1, 2, or 3
(17.2*s* - 0.4) for *s* = 4, etc

2—Recommended width to rear panel = 0.8 less than width of front panel

*3—Undimensioned differences to be equally disposed

4—Datum faces above and below runners clear of projections except for fixing screw

Figure 4 —Plug-In Unit: Side and Rear Views

Copyright © 1982 IEEE All Rights Reserved

Copyright The Institute of Electrical and Electronics Engineers, Inc.
Provided by IHS under license with IEEE
No reproduction or networking permitted without license from IHS
Not for Resale

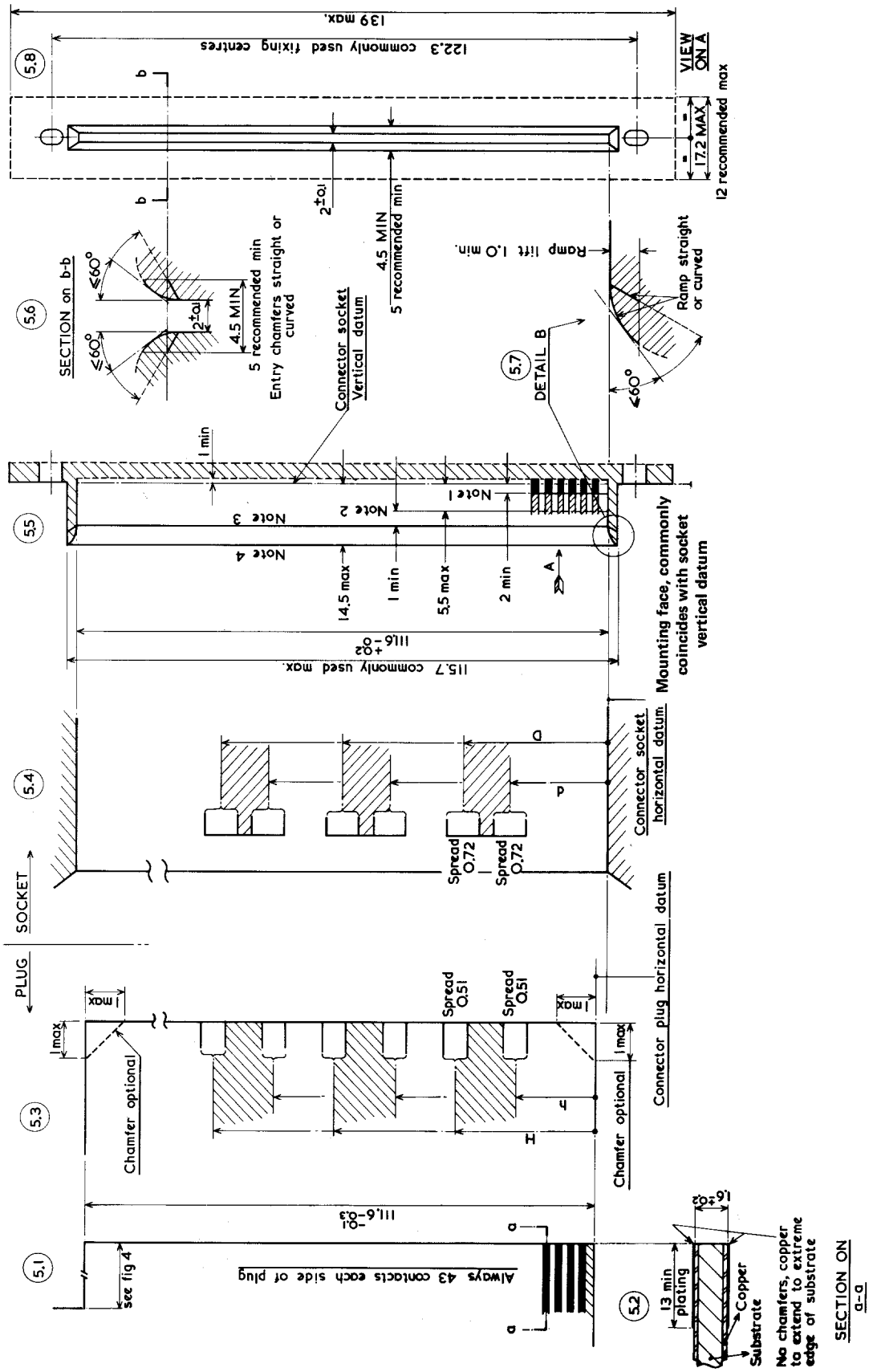

H = (between 2.69 and 3.20) + 2.54k spread = 0.51
h = (between 1.42 and 1.93) + 2.54k spread = 0.51

Copyright © 1982 IEEE All Rights Reserved

Copyright The Institute of Electrical and Electronics Engineers, Inc.
Provided by IHS under license with IEEE
No reproduction or networking permitted without license from IHS
Not for Resale

d = (between 1.71 and 2.43) + 2.54k spread = 0.72
D = (between 2.69 and 3.41) + 2.54k spread = 0.72
k = 0, 1, 2,---, 42

The position of any contact edge within the spread of its positional limits is entirely independent of the position of any other contact edge on either side of the plug or socket or both. (See Section 4.2.2)

NOTES:

1 — Plugs inserted to this line must have established all contacts

2 — Plugs inserted to this line must not have established any contacts

3 — Horizontal datum face of connector socket must extend to this line

4 — Front face of connector must not extend beyond this line

5 — A chamfer of 0.3 mm max × 0.3 mm max is permitted on the two vertical edges of the connector even though section a-a of 5.2 shows zero chamfer.

Figure 5 —Dataway Connector: 5.1 – 5.3 Connector Plug; 5.4 – 5.8 Connector Socket

Copyright © 1982 IEEE All Rights Reserved

Copyright The Institute of Electrical and Electronics Engineers, Inc.
Provided by IHS under license with IEEE
No reproduction or networking permitted without license from IHS Not for Resale

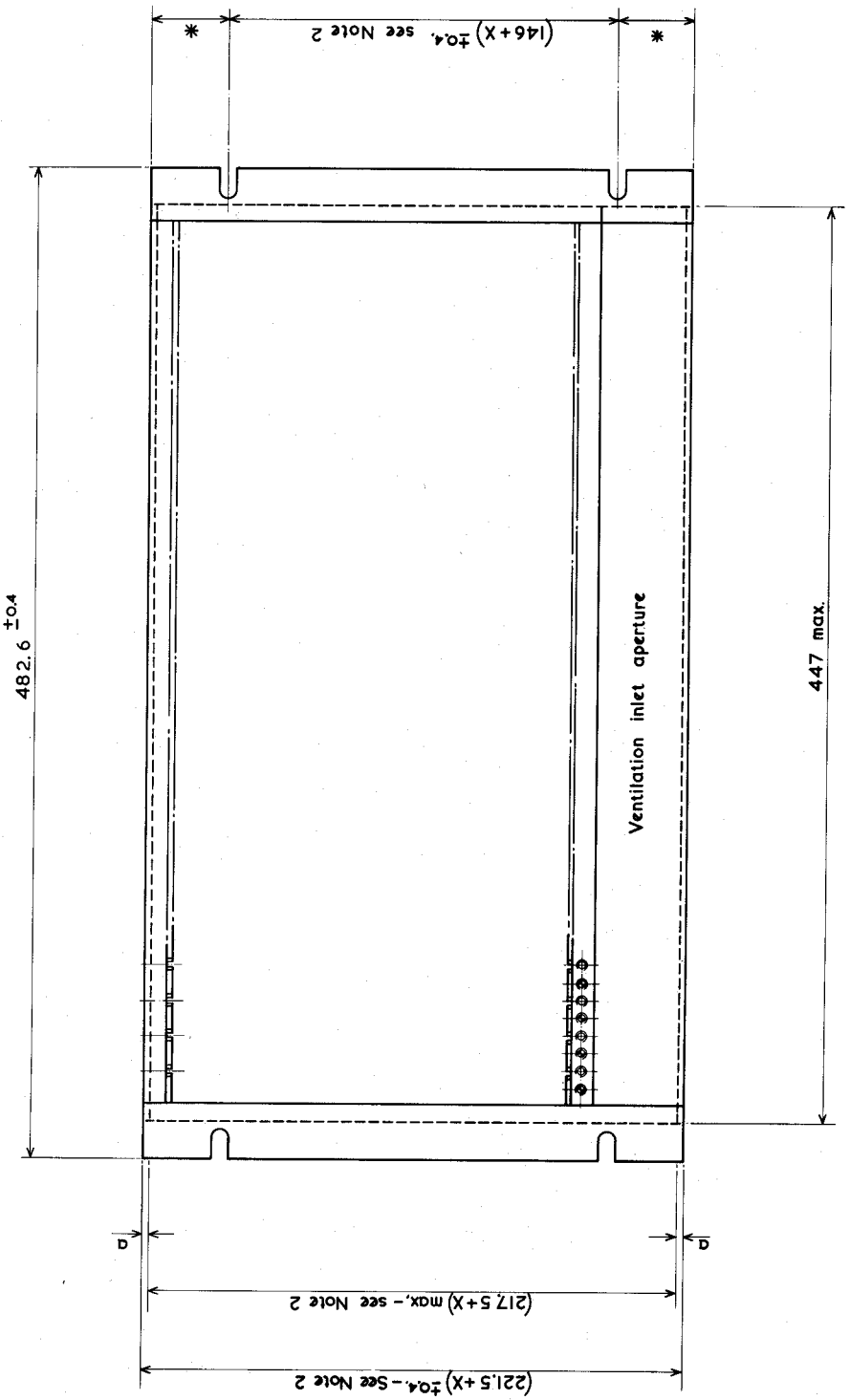

NOTES:
(1) For all details not shown see Fig 1
(2) $X = 44.45L$, where $L = 1, 2, 3$, etc
*(3) Undimensioned differences to be equally disposed

Figure 6—Ventilated Crate: Front View

Copyright © 1982 IEEE All Rights Reserved

Copyright The Institute of Electrical and Electronics Engineers, Inc.
Provided by IHS under license with IEEE
No reproduction or networking permitted without license from IHS
Not for Resale

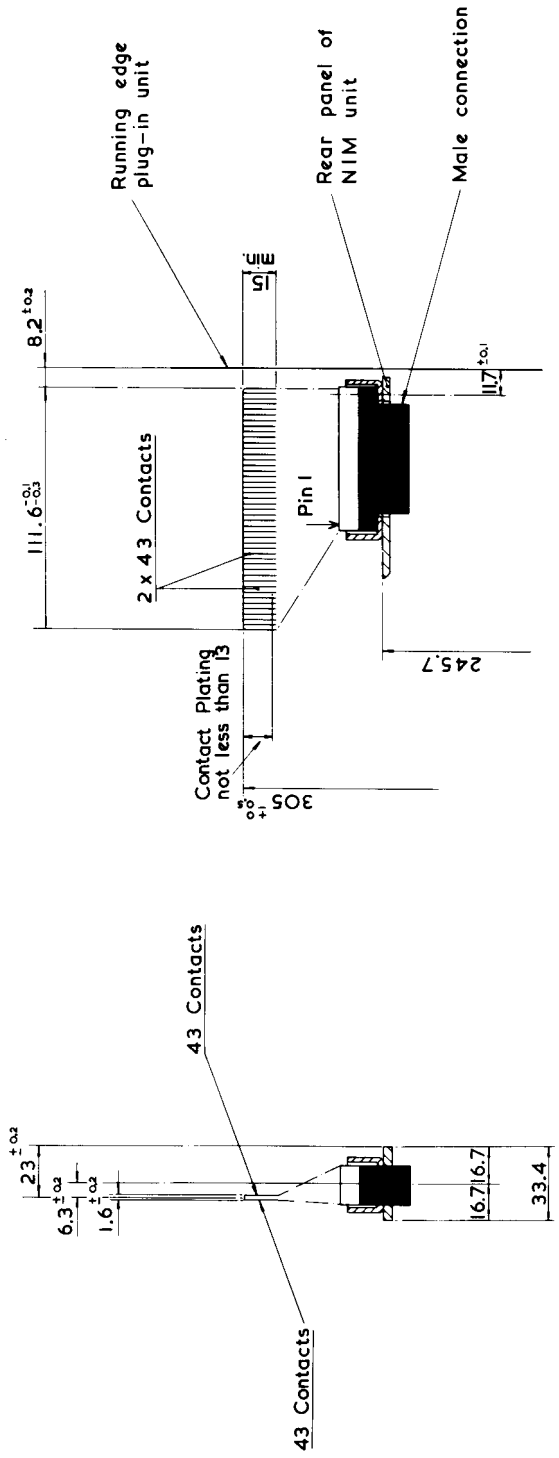

NOTE — For Contact details, see Fig 5

Figure 7 —Adaptor for NIM Units

Copyright © 1982 IEEE All Rights Reserved

Copyright The Institute of Electrical and Electronics Engineers, Inc.
Provided by IHS under license with IEEE
No reproduction or networking permitted without license from IHS
Not for Resale

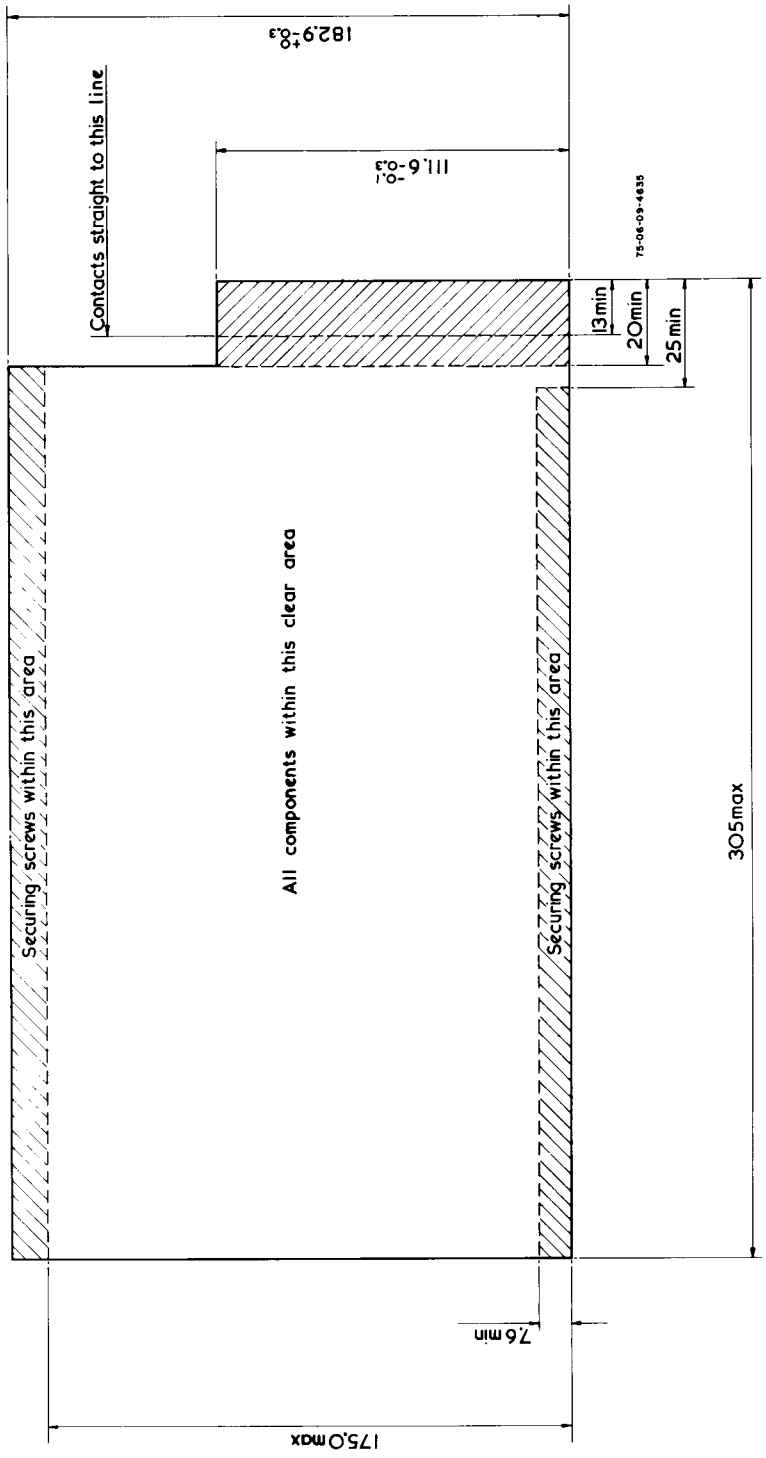

Figure 8 —Typical Printed Wiring Card

Copyright © 1982 IEEE All Rights Reserved

Copyright The Institute of Electrical and Electronics Engineers, Inc.
Provided by IHS under license with IEEE
No reproduction or networking permitted without license from IHS
Not for Resale

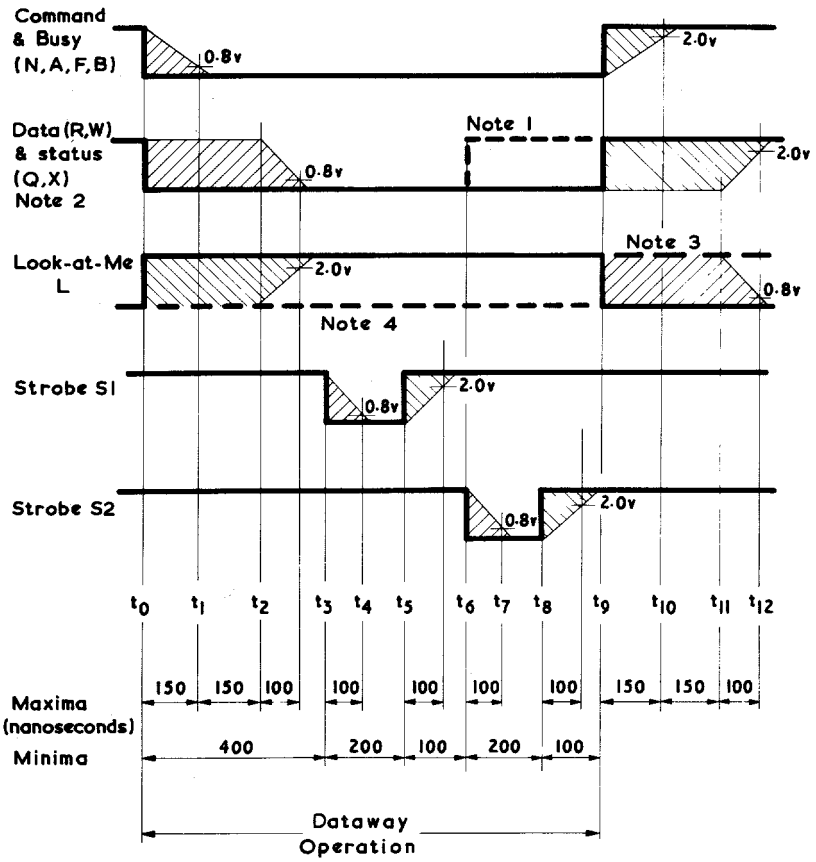

NOTES:

1 — Data and status may change in response to *S*2

2 — During some operations *Q* may change at any time

3 — LAM status may be reset during operation

4 — *L* signal may be maintained during operation

5 — For all signals the minimum rise or fall time is 10 ns. See 7.1.

6 — Signal transition at t_0 or t_9 may be absent if the signals on command or data lines are the same for the immediately preceding or following operations. See 7.1.3.1.

Figure 9 —Timing of a Dataway Command Operation

Copyright © 1982 IEEE All Rights Reserved

Copyright The Institute of Electrical and Electronics Engineers, Inc.
Provided by IHS under license with IEEE
No reproduction or networking permitted without license from IHS
Not for Resale

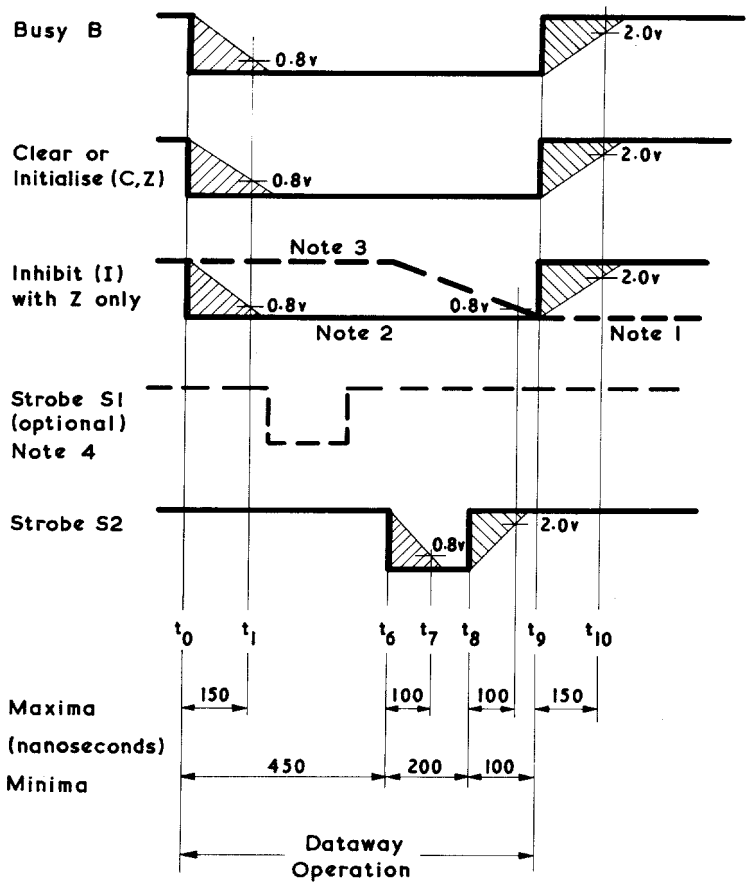

NOTES:

1 — *I* preferably maintained

2 — *I* accompanying *Z*

3 — *I* generated in response to *Z*·*S*2

4 — Other times as in Fig 9

5 — For all signals the minimum rise or fall time is 10 ns. See 7.1.

6 — Signal transition at t_0 or t_9 may be absent if the signals on command or data lines are the same for the immediately preceding or following operations. See 7.1.3.1.

Figure 10 —Timing of a Dataway Unaddressed Operation

Copyright © 1982 IEEE All Rights Reserved

Copyright The Institute of Electrical and Electronics Engineers, Inc.
Provided by IHS under license with IEEE
No reproduction or networking permitted without license from IHS
Not for Resale

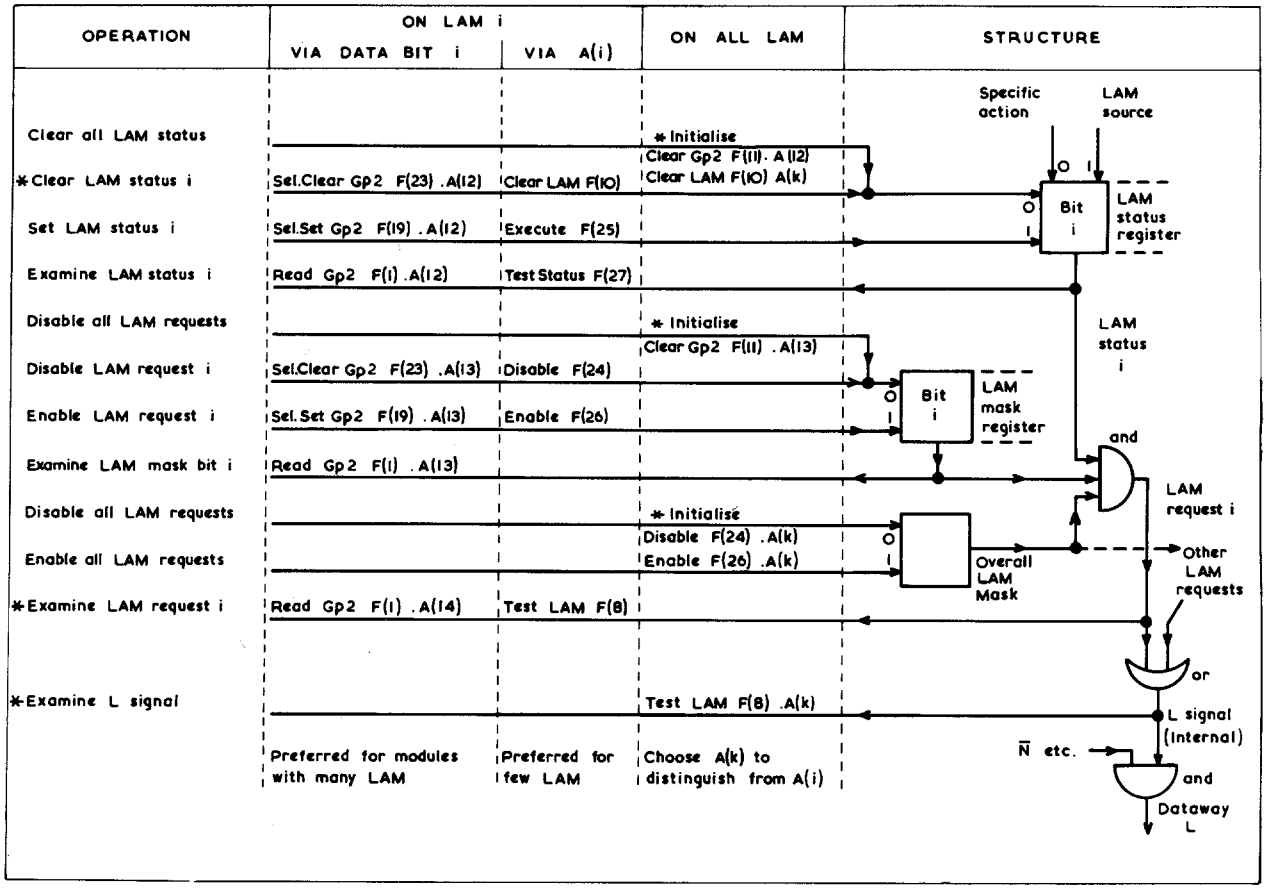

*Mandatory (See Section 5.4.1.1)

NOTE — See also Figs K5.4.1A, B, C.

Figure 11 —Some LAM Structure Options

Copyright © 1982 IEEE All Rights Reserved

Copyright The Institute of Electrical and Electronics Engineers, Inc.
Provided by IHS under license with IEEE
No reproduction or networking permitted without license from IHS
Not for Resale

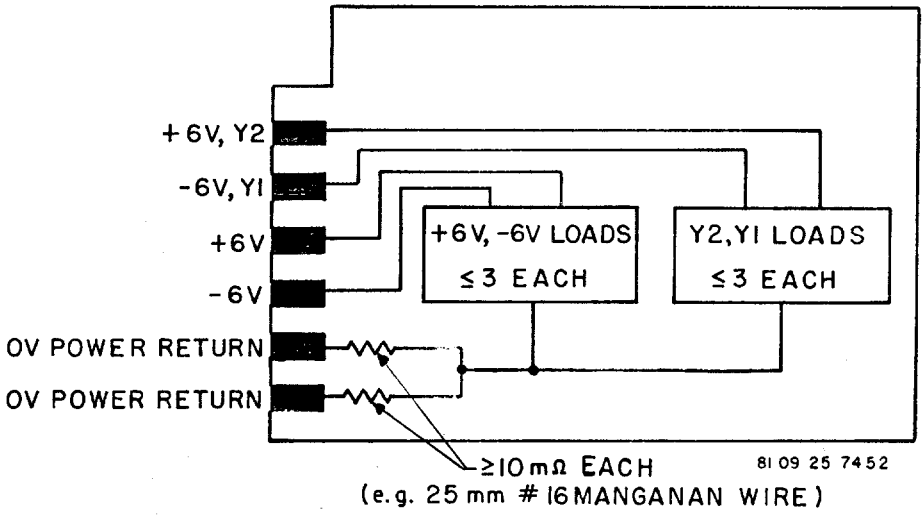

Figure 12 —Typical Current Sharing with Supplementary 6 V Power

Copyright © 1982 IEEE All Rights Reserved

Copyright The Institute of Electrical and Electronics Engineers, Inc.
Provided by IHS under license with IEEE
No reproduction or networking permitted without license from IHS
Not for Resale

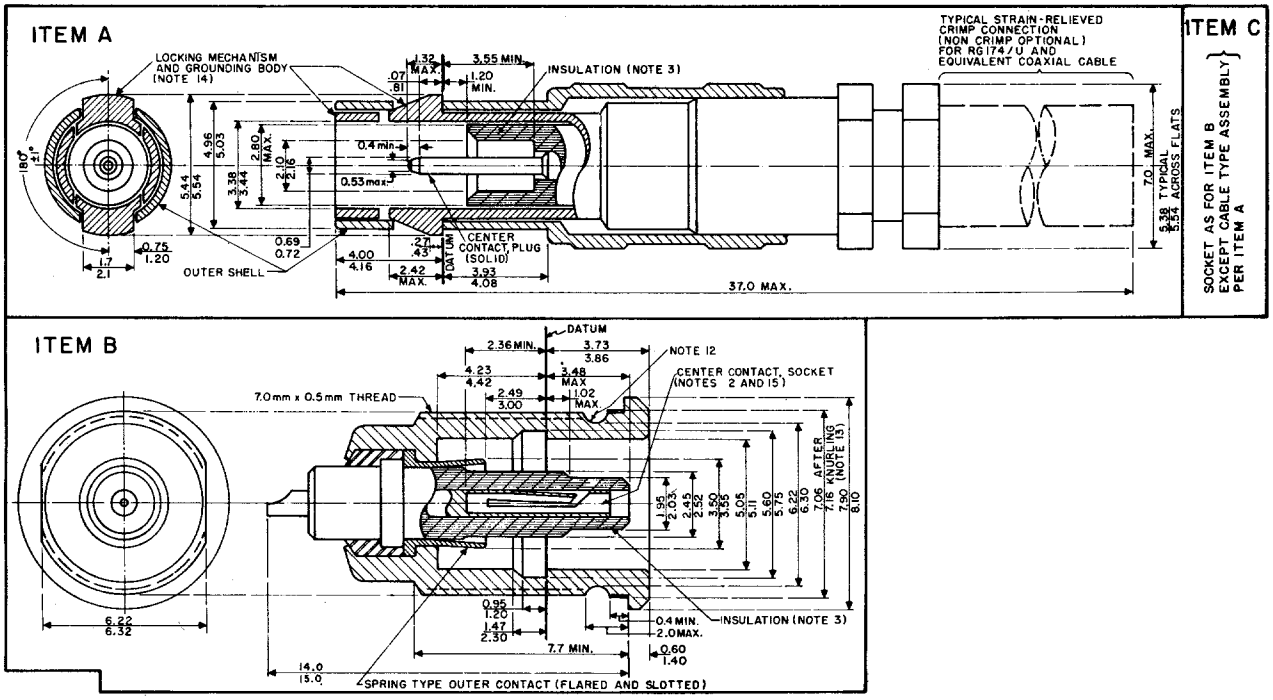

NOTES:

1 — *General*. These connectors are to be used for signal and dc voltage transmission with coaxial cables such as RG-174/*U* and RG-188/*U*. The maximum voltage reflection coefficient (VSWR-1)/(VSWR+1) of a mated connector pair consisting of item *A* and item *C* shall not exceed 0.09 for a pulse rise time (10 to 90 percent) of 150 ps in a 50 Ω system.

Normal disengagement of a mated connector shall be accomplished by applying axial pull to the sleeve of the plug. All linear dimensions are given in millimeters.

2 — *Connector Mating*. In the mated condition the combined resistance of the center contacts and the outer contacts shall not exceed 8 mΩ. Design, dimensions, and tolerances of center contact shall be such that the center contact socket will mate properly over the full range of center contact plug tolerances.

3 — *Insulation*. The insulation shall be Teflon PTFE.

4 — *Finish*. Shell: Bright Finish. Contacts: 2.5 μm minimum hard gold over nickel. The hard gold is to be gold with either nickel or cobalt as the hardening agent and capable of producing a deposit having a Knoop hardness range, at a 25 g load, of between 130 and 250.

5 — *Insulation Resistance*. Greater than 10^{12} Ω at 50 percent relative humidity at 25 °C under 500 V dc.

6 — *Dielectric Withstanding Voltage*. These connectors are to have an operating voltage of 700 V dc and 500 V rms at 50 and 60 Hz and must withstand 1500 V dc for 1 min or, alternatively, 1100 V rms at 50 or 60 Hz.

7 — *Altitude/Corona*. Corona levels shall be 500 V minimum at 5000 m altitude.

8 — *Engagement Retention and Disengagement Forces*. Maximum axial force to engage shall be 9 N (2.0 lb). Minimum cable retention force shall be 90 N (20 lb). Minimum locking lug retention force shall be 90 N (20 lb). Maximum axial disengaging force applied to outer plug sleeve shall be 12 N (2.7 lb). After extraction of the plug from the socket, the diameter over the locking lugs of the plug shall return to the dimension specified in this drawing.

9 — *Durability*. A connector assembly shall be capable of being mated and unmated at least 500 times with no evidence of physical damage which could effect the mechanical or electrical performance of the connector.

10 — *Temperature Range*. The connector shall be capable of operating within the specification herein over the temperature range of −55°C to +150°C.

11 — *Corrosion*. Connectors shall be exposed to a 5 percent salt solution at 35°C for 48 h. After exposure, the connectors shall be washed, shaken, and lightly brushed and then permitted to dry for 24 h at 40°C. Connectors shall then show no sign of corrosion or pitting and shall meet the specifications herein regarding maximum force to engage and disengage.

12 — Machining Runout Relief may Assume Any Shape Within Specified Dimensions.

13 — Knurl may be cylindrical as shown, or it may taper conically to an outer diameter of 6.95/7.05 mm as it recedes from the panel mating surface.

14 — An example of locking mechanism and grounding body, with their associated dimensions, are shown. Other designs may be used, but the overall assembly (item *A*) must mate properly with item *B* over the full range of item *B* tolerances given on this drawing.

15 — A sample center contact socket is shown. Other designs that are consistent with note 2 and with the dimensions shown for item *B* may be used.

Figure 13 —Coaxial Connector, Type 50CM

Copyright © 1982 IEEE All Rights Reserved

Copyright The Institute of Electrical and Electronics Engineers, Inc.
Provided by IHS under license with IEEE
No reproduction or networking permitted without license from IHS
Not for Resale

Annex A Definitions of Module and Controller (Informative)

In this standard the terms module and controller refer to plug-in units whose use, if any, of each Dataway line is consistent with the following table. A controller occupies the control station and at least one normal station. A module occupies one or more normal stations. A plug-in unit may combine some features of a module with some of a controller.

Line	Use by a Module	Use by a Controller
A	Receives	Generates
B	Receives	Generates
C	Receives	Generates
F	Receives	Generates
L	Generates	Receives
N	Receives	Generates
Q	Generates	Receives
R	Generates	Receives
S	Receives	Generates
W	Receives	Generates
X	Generates	Receives
Z	Receives	Generates

Copyright © 1982 IEEE All Rights Reserved

Copyright The Institute of Electrical and Electronics Engineers, Inc.
Provided by IHS under license with IEEE
No reproduction or networking permitted without license from IHS
Not for Resale

Annex B Digital Signal Classes and Standard Markings for Coaxial Connectors (Supplementary Information) (Informative)

For the information and guidance of users, each coaxial connector on the front or rear panel of a CAMAC plug-in unit should have a clear indication of its signal class.

Two Digital Signal Classes are Defined.

CAMAC Unterminated. Receivers and drivers for a class of unterminated signals compatible with TTL or DTL integrated circuits are defined in 7.2.1 (Table 8). (Note that the signal levels defined in Section D-6 of the NIM Specification may not be compatible with CAMAC unterminated signals because of logic level or current level differences.)

CAMAC Terminated (NIM Fast). Receivers and drivers for a class of terminated signals compatible with the NIM fast logic levels are defined in 7.2.2 (Table 9). Section 7.2.2 specifies that the signal is terminated in 50 Ω. The termination may be incorporated in the receiver. If this is the case, the input is referred to as being internally terminated. Alternatively, it may be desired to permit chaining of a commonly used signal to several plug-in units from a single driving circuit. In this case, the termination is external and the input is said to be externally terminated. The plug-in unit accepts the signal via a tap whose impedance is high compared to 50 Ω. The signal is terminated in 50 Ω at the end of the chain.

Standard Identifying Marks.

The signal class associated with each coaxial connector mounted on a front or rear panel of a CAMAC plug-in unit should be clearly indicated. It is recommended that the indications be either a letter code or a color code as shown in the following table. For example, the color code could consist of a colored ring around the connector or a washer of permanently colored material mounted under the coaxial connector. The washer must not interfere with any intended grounding of the connector body to the panel.

Pairs of connectors for externally terminated signals should be mounted close together. The panel should have an engraved, painted, or otherwise suitably affixed line between the connectors that form a pair.

Recommended Identifications for Coaxial Connectors

Signal Class	Letter Code	Color Code
CAMAC unterminated	TTL	light blue
CAMAC terminated (internally terminated)	50	black
CAMAC terminated (externally terminated)	HiZ	gray

Inputs and outputs should be clearly differentiated.

Copyright © 1982 IEEE All Rights Reserved

Copyright The Institute of Electrical and Electronics Engineers, Inc.
Provided by IHS under license with IEEE
No reproduction or networking permitted without license from IHS Not for Resale

Annex C Preferred Connectors and Contact Assignments (Informative)

**Preferred Power Supply Connector*

A preferred power supply connector is designated for connecting power supplies to the Dataway power lines. The connector is listed in Table C1 together with contact assignments. Typical power bus and power return bus feed and sense wiring consistent with these contact assignments is shown in Figures D-1 and D-6 of Appendix D to IEEE Std 583.

Table C1 —Preferred Power Supply Connectors and Contact Assignments*

Original Manufacturer	AMP		Winchester	
Connector Type*	AMP-INCERT Series M		MRAC	
Number of Contacts	50		50	
Catalog Numbers				
Fixed Member PG-27 (crate connector)	201358-3		MRAC-50P-752	
Free Member PG-26 (power supply connector)	200277-4		MRAC-50S-752	
Suitable Contacts				
AWG Wire Gauge Accommodated	Pin†§	Socket‡§	Pin†	Socket‡
One #16 or #18	66098 or 202507	66100 or 202508	100-1016P-112 or 100-7116P	100-51016S-112 or 100-7116S
One #30	66425 or 201555	—	100-1026P-112	—
Two #18	66359 or 202725	—	100-7113P	—
Polarization Guides	200833(GP)**	200835(GS)**	111-20855(GP)**	111-20856-1(GS)**

*Other connectors fully mateable with those listed here and with at least 13 A per contact rating may be used.
†Pins to be used in Fixed Member (crate connector).
‡Sockets to be used in Free Member (power supply connector).
§Contacts listed here in the 66 000 series are Type III+ (formed) and those in 20 000 series are Type II (machined). Type II have lower resistance than Type III+ but are more expensive.
**GP designates ground pin. GS designates ground socket. (GP and GS are not part of manufacturers' numbers.) Two guide pins or sockets are required at each end of the connector blocks as indicated in the following Contact Assignments.

Copyright © 1982 IEEE All Rights Reserved

Copyright The Institute of Electrical and Electronics Engineers, Inc.
Provided by IHS under license with IEEE
No reproduction or networking permitted without license from IHS Not for Resale

Table C1 (continued) —Contact Assignments (for Preferred Power Supply Connectors)

A	Reserved (a)*	a	−12	AA	+12 R
B	Reserved (b)*	b	−12 S	BB	+12 S
C	Reserved (c)*	c	−12 R	CC	+12
D	Reserved (d)*	d	−12 RS	DD	+24 RS
E	reserved	e	−6 S		
		f	−6 S		
F	reserved	h	−6	EE	+24 R
H	reserved	j	−6 R	FF	+24 S
J	chassis Ground, Status and	k	−6	HH	+24
	Temperature Warning Returns	m	−6 R		
		n	−6		
K	Status	p	−6 R		
L	Temperature Warning	r	+6 RS		
M	Y2 R	s	+6 S		
N	Y2 RS	t	+6 R		
P	Y2 (Supplementary +6 V)	u	+6		
R	Y2 S	v	+6 R		
S	Y1 S	w	+6		
T	Y1 Supplementary −6 V)	x	+6 R		
U	Y1 RS	y	+6		
V	Y1 R	z	+12 RS		
W	−24				
X	−24 S				
Y	−24 R				
Z	−24 RS				

Guide Pin/Socket Assignments (Two on Each End Of Block)

Fixed Member	Block End A,B (GS)
(crate connector)	Block End FF, HH (GP)
Free Member	Block End A,B (GP)
(power supply connector)	Block End FF, HH (GS)

NOTE — R = return, S = sense, and RS = return sense.

*Reserved (c) was previously assigned to +200 V dc
Reserved (a) to 117 V ac line, and
Reserved (b) to 117 V ac Neutral.
Effective January 1, 1978, these assignments were cancelled in order to avoid hazardous voltages on the connectors.

Copyright © 1982 IEEE All Rights Reserved

Copyright The Institute of Electrical and Electronics Engineers, Inc.
Provided by IHS under license with IEEE
No reproduction or networking permitted without license from IHS Not for Resale

C2 Auxiliary Connectors

Preferred auxiliary connectors as listed in Table C2 are designated for communicating from and to plug-in units. The fixed connector is preferably mounted with pin 1 at the bottom.

When used for balanced or unbalanced signal transmission lines, it is recommended that the signal pairs be assigned as shown in Table C3. *Return* is to be used as the complement of *signal* for a balanced pair, or as the ground reference for an unbalanced pair. The recommended location of the common ground, and also of Vcc, if used, is in the table. The contact assignments for the 52 pin and 88 pin connectors have been made to facilitate the use of ribbon cables.

Cable assemblies consisting of multiple twisted pairs of conductors can be made with individual twisted pairs assigned to pins as shown in the table. The same cable assemblies can also be used where individual signals of a group are each carried on a single conductor, with a common ground return for the group. Cable assemblies made in conformance with these recommendations should be marked to differentiate them from other, outwardly similar, cables so as to indicate to the user that the cable contains only twisted pairs, with pairs connected to all pins as shown in Table C3.

Copyright © 1982 IEEE All Rights Reserved

--`,,`-`-`,,`,,`,`,,`---

Copyright The Institute of Electrical and Electronics Engineers, Inc.
Provided by IHS under license with IEEE
No reproduction or networking permitted without license from IHS Not for Resale

Table C2 —Preferred Auxiliary Connectors*

Original Manufacturer	**ITT Cannon Electric**	**Hughes Aircraft Company**	
Connector Type	**2D subminiature rectangular connector**	**WSS subminiature rectangular connector**	
Number of Contacts	52	88	132
Polarizing Code			BN
Usable on	Front or rear panels, all widths	Front panels, all widths	Front panels down to double width
Catalog Numbers			
Fixed member (Chassis connector)	2DB52P Pin Housing	WSS 0088 S00 BN00 Socket Housing	WSS 0132 S00 BN00 Socket Housing
Locking assembly	D20418-2		
Free member (Cable connector)	2DB52S Socket Housing	WSS 0088 Pxx BNyyy† Pin Housing	WSS 0132 Pxx BNyyy* Pin Housing
Cable hood	DB24659	WAC 0088 H005 for example	WAC 0132 H005 for example
Locking assembly	D20419		

*Equivalent connectors that are fully mateable with those listed here may be used.
†Pxx yyy denotes type of jack screw.

Copyright © 1982 IEEE All Rights Reserved

Copyright The Institute of Electrical and Electronics Engineers, Inc.
Provided by IHS under license with IEEE
No reproduction or networking permitted without license from IHS Not for Resale

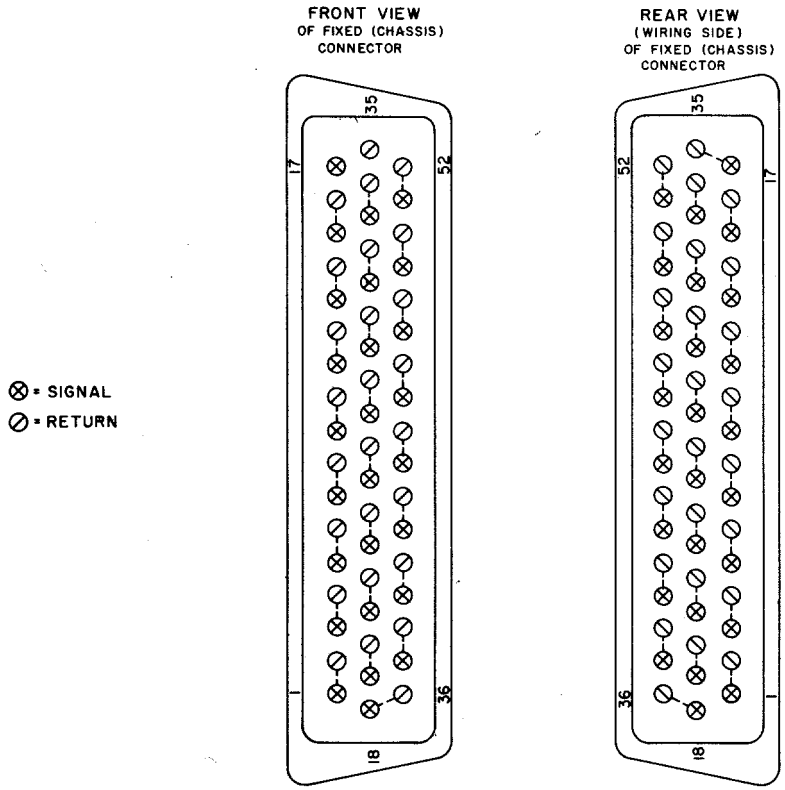

Figure C-1—Contact Arrangement for Preferred 52 Pin Auxiliary Connector

Copyright © 1982 IEEE All Rights Reserved

Copyright The Institute of Electrical and Electronics Engineers, Inc.
Provided by IHS under license with IEEE
No reproduction or networking permitted without license from IHS
Not for Resale

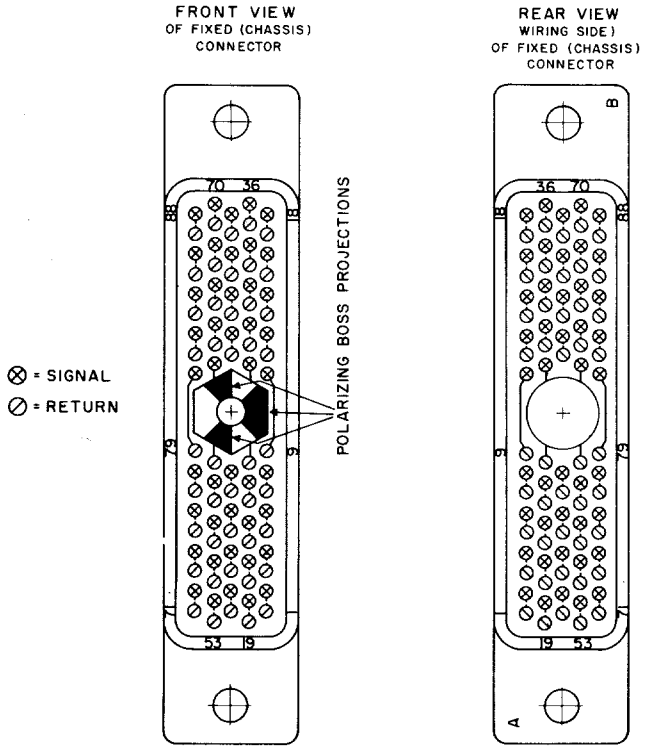

Figure C-2—Contact Arrangement for Preferred 88 Pin Auxiliary Connector

Copyright © 1982 IEEE All Rights Reserved

Copyright The Institute of Electrical and Electronics Engineers, Inc.
Provided by IHS under license with IEEE
No reproduction or networking permitted without license from IHS
Not for Resale

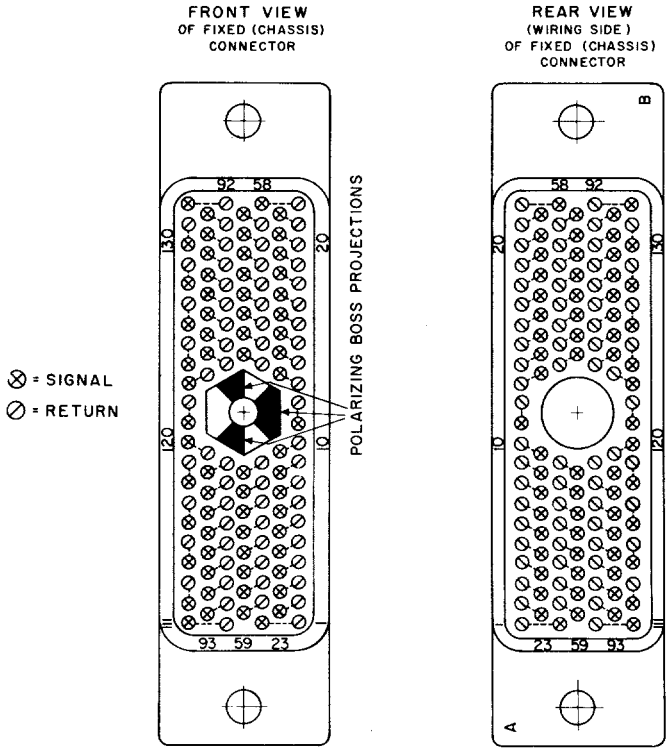

Figure C-3—Contact Arrangement for Preferred 132 Pin Auxiliary Connector

Table C3 —Contact Arrangement for Preferred Auxiliary Connector

PAIR NO.	52 Pin Cannon		88 Pin Hughes		132 Pin Hughes	
	Signal Contact	Return Contact	Signal Contact	Return Contact	Signal Contact	Return Contact
1	1	2	2	1	41	1
2	3	4	4	3	23	2
3	5	6	6	5	24	3
4	7	8	8	7	25	4
5	9	10	10	9	26	5
6	11	12	12	11	27	6
7	13	14	14	13	28	7
8	15	16	16	15	29	8
9	17	35	18	17	30	9
10	18	36	20	19	31	10
11	19	20	22	21	11	12
12	21	22	24	23	32	13
13	23	24	26	25	33	14
14	25	26	28	27	34	15
15	27	28	30	29	35	16
16	29	30	32	31	36	17
17	31	32	34	33	37	18
18	33	34	36	35	38	19
19	37	38	38	37	39	20
20	39	40	40	39	40	21

Copyright © 1982 IEEE All Rights Reserved

Copyright The Institute of Electrical and Electronics Engineers, Inc.
Provided by IHS under license with IEEE
No reproduction or networking permitted without license from IHS
Not for Resale

PAIR NO.	52 Pin Cannon		88 Pin Hughes		132 Pin Hughes	
	Signal Contact	Return Contact	Signal Contact	Return Contact	Signal Contact	Return Contact
21	41	42	42	41	58	22
22	43	44	44	43	59	42
23	45	46	46	45	60	43
24	47	48	48	47	61	44
25	49	50	50	49	62	45
26	51	52	52	51	63	46
27			54	53	54	47
28			56	55	65	48
29			58	57	66	49
30			60	59	67	50
31			62	61	68	51
32			64	63	69	52
33			66	65	70	53
34			68	67	71	54
35			70	69	72	55
36			72	71	73	56
37			74	73	74	57
38			76	75	93	76
39			78	77	94	77
40			80	79	95	78
41			82	81	96	79
42			84	83	97	80
43			86	85	98	81
44			88	87	99	82
45					100	83
46					103	84
47					104	85
48					105	86
49					106	87
50					107	88
51					108	89
52					109	90
53					110	91
54					111	75
55					112	113
56					114	115
57					116	117
58					118	119
59					120	101

Copyright © 1982 IEEE All Rights Reserved

--`,,`-`-`,,`,,`,`,,`---

Copyright The Institute of Electrical and Electronics Engineers, Inc.
Provided by IHS under license with IEEE
No reproduction or networking permitted without license from IHS
Not for Resale

PAIR NO.	52 Pin Cannon		88 Pin Hughes		132 Pin Hughes	
	Signal Contact	Return Contact	Signal Contact	Return Contact	Signal Contact	Return Contact
60					121	122
61					123	102
62					124	125
63					126	127
64					128	129
65					130	131
66					132	92
Ground (when used)	50 & 52				111 & 75	
Vcc (when used)	49 & 51					

NOTE — RETURN is to be used as the complement of SIGNAL for a balanced pair, or as the ground reference for an unbalanced pair.

Copyright © 1982 IEEE All Rights Reserved

--`,,`-`-`,,`,,`,`,,`---

Copyright The Institute of Electrical and Electronics Engineers, Inc.
Provided by IHS under license with IEEE
No reproduction or networking permitted without license from IHS Not for Resale

Annex D Typical Crate Mounted Power Supply and Ventilation Unit With Crate/ Power Supply Interface Housing (Informative)

D.1 General

The power supply described herein is suitable for use with the Standard Modular Instrumentation and Digital Interface System (CAMAC).

This description is written in the form of a specification for the convenience of those who wish to use it for that purpose.

Due to the high operational reliability required, only the highest quality components should be employed. All semiconductor components shall be silicon and shall be encapsulated in metal or ceramic, hermetically sealed, cases. Components shall not be used beyond their design ratings. The supply shall be designed with a life expectancy of at least 5 yr. See Fig D-1 for block diagram. Wiring to the right of PG-26 is not considered part of the power supply.

D.2 Input

For 120 V nominal voltage, the input voltage range shall be 103 to 129 volts. For other nominal voltages the input voltage range shall be the nominal + 10 percent to – 12 percent.

Line frequency range shall be the nominal (60 Hz in the U.S.) ±3 Hz.

D.3 Output

The supply is to provide four dc outputs with at least the following current ratings:

Voltage Volts	Current Amperes
+ 6.00	0–25
– 6.00	0–25
+24.00	0–6
–24.00	0–6

The four outputs shall be simultaneously available, but the currents may be limited to a minimum total output power of 294 W. The ±6.0 V supplies shall operate on a current sharing basis, such that the total combined current outputs may be limited to 25 A. Likewise, the ±24 V supplies shall be current shared and may be limited to a total combined current output of 6 A. Rated output current shall also be available to loads connected between the positive outputs and the negative outputs.

If the output power demanded should exceed a safe operating value, the supply shall protect itself.

Remote sensing shall be utilized on all outputs of this power supply. Remote sense points can be expected to be within 305 mm of the crate connector, PG-27. All wiring shall be in accordance with Fig D-1.

Copyright © 1982 IEEE All Rights Reserved

Copyright The Institute of Electrical and Electronics Engineers, Inc.
Provided by IHS under license with IEEE
No reproduction or networking permitted without license from IHS Not for Resale

D.4 Regulation and Stability

1) During a 24 h period the ±6.0 V outputs shall vary by not more than ±0.5 percent due to changes of input voltage and output current within the specified ranges.
2) During a 24 h period the ±24 V outputs shall vary by not more than ±0.2 percent due to changes of input voltage and output current within the specified ranges.
3) The long-term stability shall be such that, after a 24 h warmup, over a six month period for constant load, line, and ambient temperature conditions, the ±6.0 V output shall drift not more than ±0.5 percent; the ±24 V outputs shall drift not more than ±0.3 percent. (See Figs D-3 and D-4)

D.5 Noise and Ripple

Noise and ripple, as measured on an oscilloscope of dc to 50 MHz bandwidth, shall not exceed 15 mV peak-to-peak.

D.6 Temperature and Temperature Coefficient

The ambient temperature range is from 0°C to 50°C without derating. Ambient temperature as used throughout this specification shall be taken at a location that is not affected by the temperature of the power supply.

The output voltage coefficients for changes in ambient temperatures between 0°C and 50°C shall not exceed 0.02 percent per °C.

D.7 Voltage Adjustment

The output voltage shall be adjustable over a nominal range of at least ±2 percent by means of screwdriver adjustments accessible through the rear or top of the supply. The maximum error in resetting each output voltage shall be ±0.5 percent.

D.8 Recovery Time and Turn-on Turn-off Transients

The outputs shall recover to within ±0.2 percent of their steady state values within 1 ms for any change within the specified input voltage and for a 50 percent rated load current change. The peak output excursions during 1 ms shall not exceed ±5 percent of rated voltage for such line or load changes and shall be proportionately less for smaller changes.

Response to input voltage changes or to ±5 percent bus line voltage changes shall be nonoscillatory.

From turn-on the power supply outputs shall stabilize to within ±1% of their final values within 1 min for constant line, load, and ambient temperature. The outputs shall turn on in an asymptotic manner, that is, without overshoot. The transient during turn-off shall not result in any voltage exceeding 107% of nominal value when tested at any current within rating, with a resistive load.

D.9 Magnetic Field Effects

A magnetic field of 50 G in any direction shall not cause performance characteristic variations of more than ±0.5 percent.

D.10 Power Transformers

The power transformers shall be constructed with an electrostatic shield which is connected to the core.

Copyright © 1982 IEEE All Rights Reserved

Copyright The Institute of Electrical and Electronics Engineers, Inc.
Provided by IHS under license with IEEE
No reproduction or networking permitted without license from IHS Not for Resale

D.11 Terminals

All wiring shall be as shown in Fig D-1.

1) When designed for use with 117 V ac mains, a three-wire power cord of approximately 1.5 m in length shall be included. It shall have a NEMA Cap, 5-15P. The power cord may be permanently attached to the power supply, or alternatively, may terminate in a NEMA Connector Body 5-15R, mating with a NEMA Inlet 5-15P on the power supply.
2) The dc output power shall be supplied via a connector (PG-26) as designated in Fig D-1, or mating equivalent. Wire size, socket types, and pin assignments are specified in Fig D-1.

D.12 Protection

1) The input of the supply shall be protected with a fuse of adequate rating in each side of the line. The fuses shall be readily accessible.
2) The output of the supply shall be shortcircuit protected by means of an electronic circuit. The current limiting threshold shall be set at least 0.2 A above the specified maximum output currents. The output voltage shall be resumed after the short has been removed. A continuous short circuit shall not damage the supply or blow a fuse.
3) The output shall be protected by limiting circuits so that under no conditions will the ±24 V outputs exceed 34 V or the ±6.0 V outputs exceed 7.5 V. Operation of the overvoltage protection shall not damage the power supply.
4) In no case shall a failure of any supply cause an increase in voltage of any other supply by more than 20 percent.
5) The power supply shall not damage itself, and the conditions of *D*12(3) shall apply if the power supply is turned on with any or all pins of PG-26 disconnected.
6) Thermal protection circuits shall be provided to disable the supply when the temperature exceeds a safe operating value.

The maximum safe operating temperature, as measured at the thermal switch, shall be specified on the schematic circuit diagram.

D.13 Crate Ventilation

This power supply shall include fans and mechanical assembly to provide forced air ventilation of a CAMAC crate. Air flow of at least 12 ft^3/min shall be directed into each of four equal crate sections extending from front to back. The air flow impedance of densely packed CAMAC modules in all twenty-five stations shall be considered in determining the minimum air flow rate.

Air shall be drawn from directly in front of the rack in which the assembly is mounted. Air filters, allowing a visual inspection from the front, shall be included. The air shall be channeled in such a way that it does not experience an appreciable temperature rise due to the heat of the power supply. The unit shall include a POWER ON-OFF switch. The switching shall be such that the fans must operate whenever the power supply is operating.

D.14 Mounting

The supply shall be constructed for rack mounting immediately below a CAMAC crate in such a fashion that the ventilation requirements of this specification are achieved.

1) Fig D-2 specifies several outline dimensions and component locations to which the unit must adhere.
2) Interface housing units (see Fig D-5) mechanically adapt CAMAC crates from various sources to this power supply. They also house and protect PG-27, power busing, and the dataway connectors.

Copyright © 1982 IEEE All Rights Reserved

Copyright The Institute of Electrical and Electronics Engineers, Inc.
Provided by IHS under license with IEEE
No reproduction or networking permitted without license from IHS Not for Resale

An interface housing unit is not a part of this specification. The power supply shall, however, be provided with four #10-32 captive screws in the positions shown in Fig D-2 as a means of securing to an interface housing unit.

3) The panel height of the supply is not specified. Panel height is at a premium in rack space. Trade offs between panel height and power supply costs should be optimized.

D.15 Monitoring

1) Front panel metering shall be provided to monitor the four dc voltages and their current loads. The metering shall be accurate to ±2.5 percent full scale.
   The meter scales shall be calibrated with full scales of 120–135 per cent of nominal voltage and rated current values and shall have labeled markers at nominal voltage values and at rated current values.
2) A front panel neon lamp (or suitable solid state indicator) wired as shown in Fig D-1 shall be provided to indicate the ac power on condition.
3) A front panel thermal warning light, wired as shown in Fig D-1, shall be provided. It shall light whenever the temperature within the supply exceeds a value 20°C below the maximum safe operating temperature. The thermal warning lamp may be a neon lamp, as shown, or a solid state indicator may be used.

D.16 Mechanical Construction

1) Insulating materials such as printed wiring boards shall be flame retardant.
2) All components shall be accessible for testing and replacement.
3) All integrated circuits shall be mounted in high-quality integrated circuit sockets.
4) Markings: Major components such as solid state devices, transformers (including leads), large capacitors, controls, and terminals shall be marked in the most readable position in the unit with respect to their identification on the schematic diagram.

D.17 Circuit Diagram

Two copies of the schematic circuit diagram, which include component values, shall be provided with each supply. All semiconductor components shall be designated by Electronic Industries Association numbers or in nomenclature commonly used by semiconductor manufacturers or shall be directly replaceable by the same. Where special types are used, the schematic diagram or instruction book shall recommend a semiconductor manufacturer's equivalent that will provide satisfactory performance.

D.18 Finish

All front panel metal surfaces shall be finished with a baked-on enamel or with an equally hard, chip-resistant, material. All surfaces not seen from the front may be finished similarly, or may be finished with nickel plate, iridite or other material that will assure good electrical contact and that, where necessary, is passivated against atmospheric corrosion or against electrolysis when in contact with copper or with other common finishes.

Numerals 1–25, representing station numbers in a CAMAC crate, and to identify modules inserted into a crate which may be mounted immediately above the supply, shall be printed on the front panel near the top edge. They shall be in consecutive order from left to right as viewed from the front with the numeral 13 at the front panel centerline, and shall be positioned at 17.2 mm intervals. The numerals shall be at least 4 mm in height.

D.19 Test Conditions

Crate wiring between PG-27 and the Dataway power bus shall be simulated by 305 mm of lead. Sense leads and test-load leads shall be attached at this distance from PG-27, and measurements to determine adherence to these

Copyright © 1982 IEEE All Rights Reserved

Copyright The Institute of Electrical and Electronics Engineers, Inc.
Provided by IHS under license with IEEE
No reproduction or networking permitted without license from IHS Not for Resale

specifications shall be made at this point. Users are alerted to the fact that, in practice, performance will depend upon the actual positions of sense points and the reactive nature of loads.

D.20 Optional Feature—Status Bit

A Status Bit to indicate whether the power unit is functioning normally may be provided. This optional feature, when provided, shall be standardized as follows:

1) The Status Bit source shall be a relay which provides contact closure when in the alarm condition; shorting the Status Bit line to the power-unit chassis. Under normal operating conditions, the Status Bit line shall be an open circuit in the power unit.
   Contact rating shall be minimally 50 V, 500 mA.
2) The Status Bit alarm condition shall indicate that any one of the following conditions exist:
   a) Any one of the voltages supplied by the unit is outside of specified voltage range.
   b) Any one or combination of supplies is being loaded beyond specified current range.
   c) The thermal warning switch is in the alarm condition.
   The Status Bit may indicate additional alarm conditions at the option of the manufacturer, but (a), (b), and (c) must minimally be included.
3) In the power unit, the Status Bit shall be wired to contact *K* of PG-26 and to a front panel 50CM coaxial connector.

D.21 Figures

Fig D-1 interconnection block diagram.

Fig D-2 outline dimensions and illustrated unit.

Fig D-3 Time and voltage characteristics ±6 V.

Fig D-4 Time and voltage characteristics, ±24V

Fig D-5 Interface housing unit

Fig D-6 Typical Power buses and power return bus, feed and sense wiring (see note below).

NOTE — The information on Figs D-5 and D-6 indicate preferred practice for fabrication and assembly of CAMAC crate wiring and the interface housing unit. It is presented here because of the intimate relationship between these and the power supply and ventilation unit.

Copyright © 1982 IEEE All Rights Reserved

Copyright The Institute of Electrical and Electronics Engineers, Inc.
Provided by IHS under license with IEEE
No reproduction or networking permitted without license from IHS Not for Resale

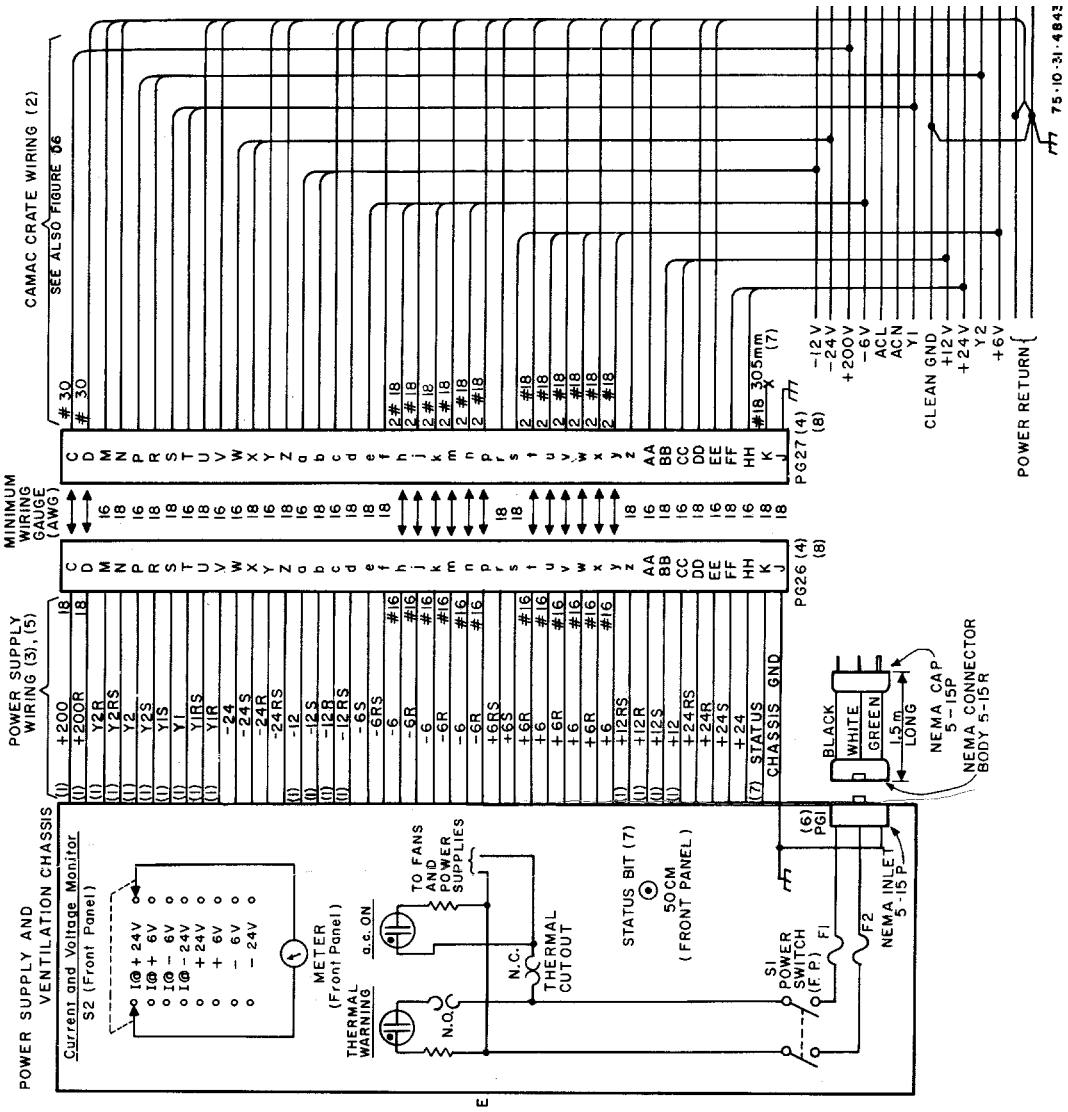

NOTES:

1—Optional voltages. Pins reserved for optional voltages not supplied by this unit. If wired, minimum wire gauges shown pertain.

2—All pins wired as shown. PG27 and CAMAC crate wiring are not provided with this power supply.

3—Sufficient length, positioning, and flexibility to mate with crate connector mounted as shown in Fig D-2 (minimum length, 305 mm).

4—PG-26—Fixed Member (crate connector) with socket contacts in accordance with Appendix C of IEEE Std 583.
PG-27—Free Member (power supply connector) with pin contacts in accordance with Appendix C of IEEE Std 583.
Other connectors fully mateable with these and with at least 13 A per contact rating may be used.

5—24 indicates 24 V line
24 *R* indicates 24 V return line
24 *S* indicates 24 V sense line
24 *RS* indicates 24 V return sense line and so forth for other voltages

6—PG-1 optional

7—Optional feature, Section D20.

8—Polarization of connectors PG-26 and PG-27 is to be provided by the use of two guide pins in the corner holes of one end and two guide sockets in the corner holes of the other end of each connector block, in accordance with Appendix C of IEEE Std 583.

9—A solid state indicator may be used in lieu of the neon lamp shown for a thermal warning lamp.

Figure D-1—Interconnection Block Diagram

Copyright © 1982 IEEE All Rights Reserved

Copyright The Institute of Electrical and Electronics Engineers, Inc.
Provided by IHS under license with IEEE
No reproduction or networking permitted without license from IHS
Not for Resale

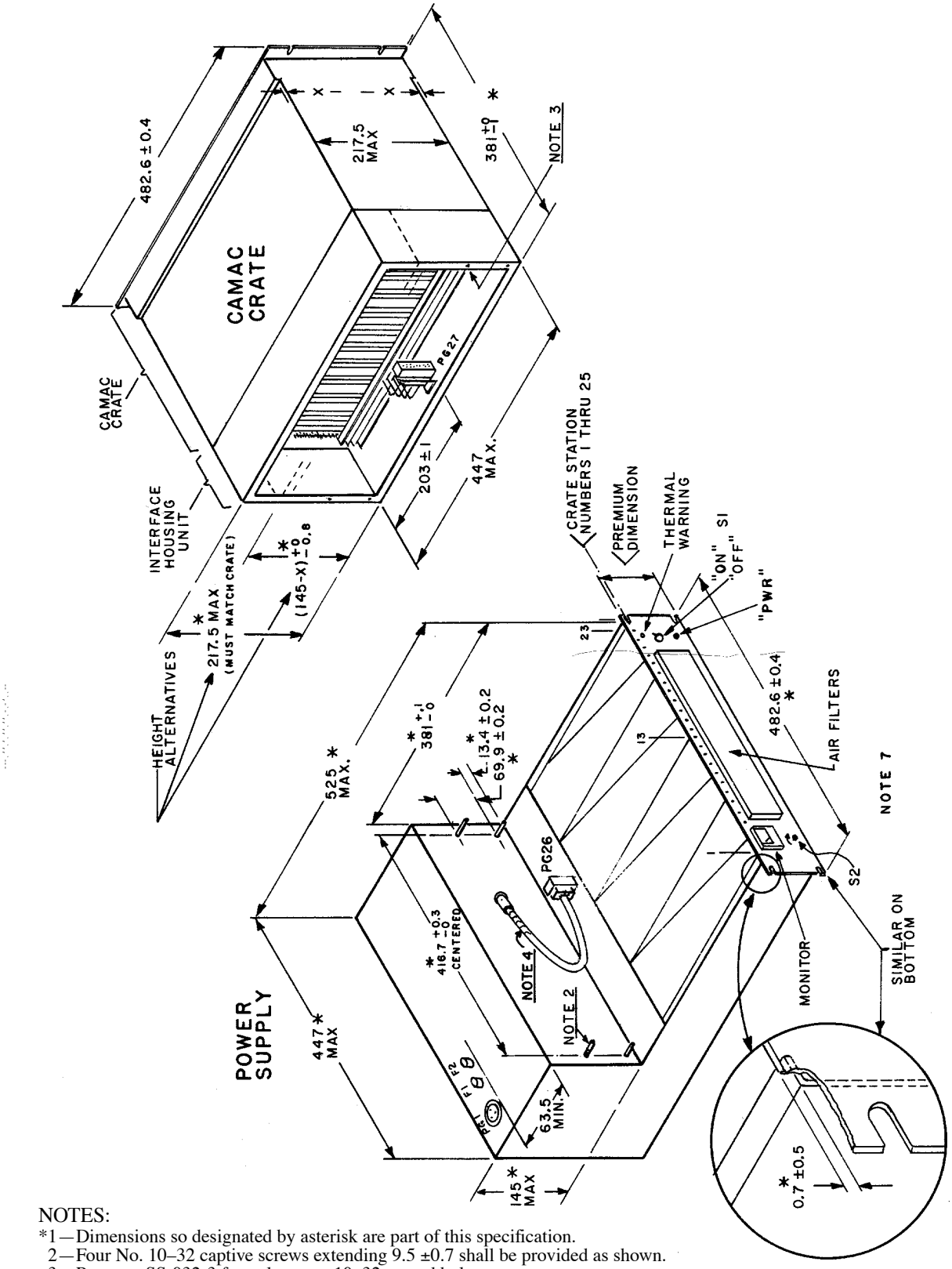

NOTES:
*1—Dimensions so designated by asterisk are part of this specification.
2—Four No. 10–32 captive screws extending 9.5 ±0.7 shall be provided as shown.
3—Pemnuts SS-032-3 four places, or 10–32 tapped holes.
4—305 minimum length.
5—All dimensions are in millimeters.
6—PG26 and PG27 are preferred power supply connectors of Appendix C.
7—Blowers mounted within this to provide ventilation for plug-in units.

Figure D-2—Outline Dimension and Illustrative Unit

Copyright © 1982 IEEE All Rights Reserved

Copyright The Institute of Electrical and Electronics Engineers, Inc.
Provided by IHS under license with IEEE
No reproduction or networking permitted without license from IHS
Not for Resale

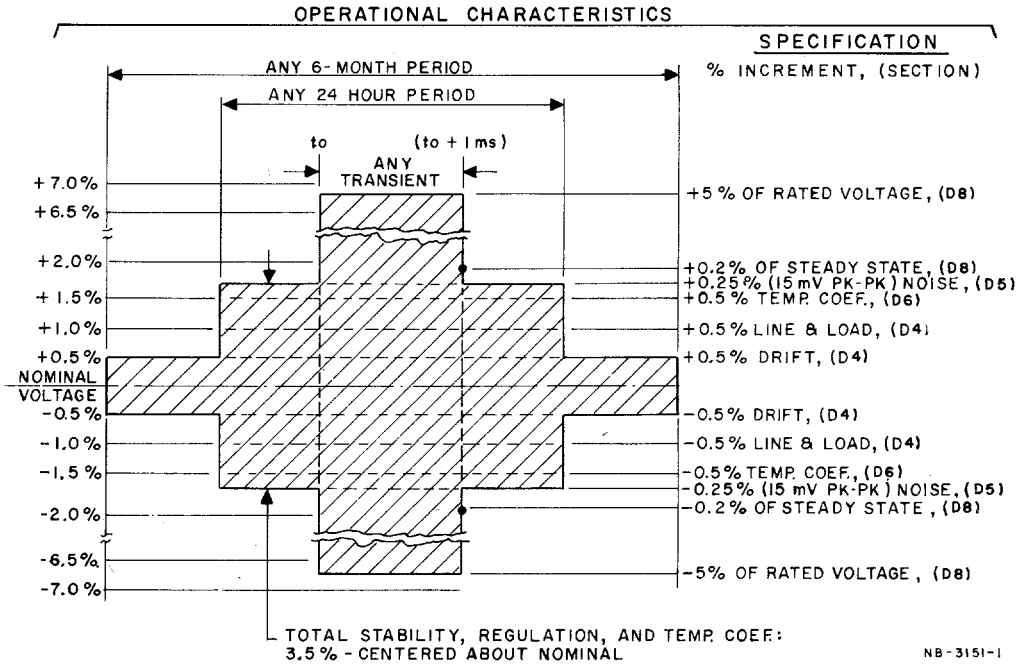

Figure D-3—Time and Voltage Characteristics, ±6 V

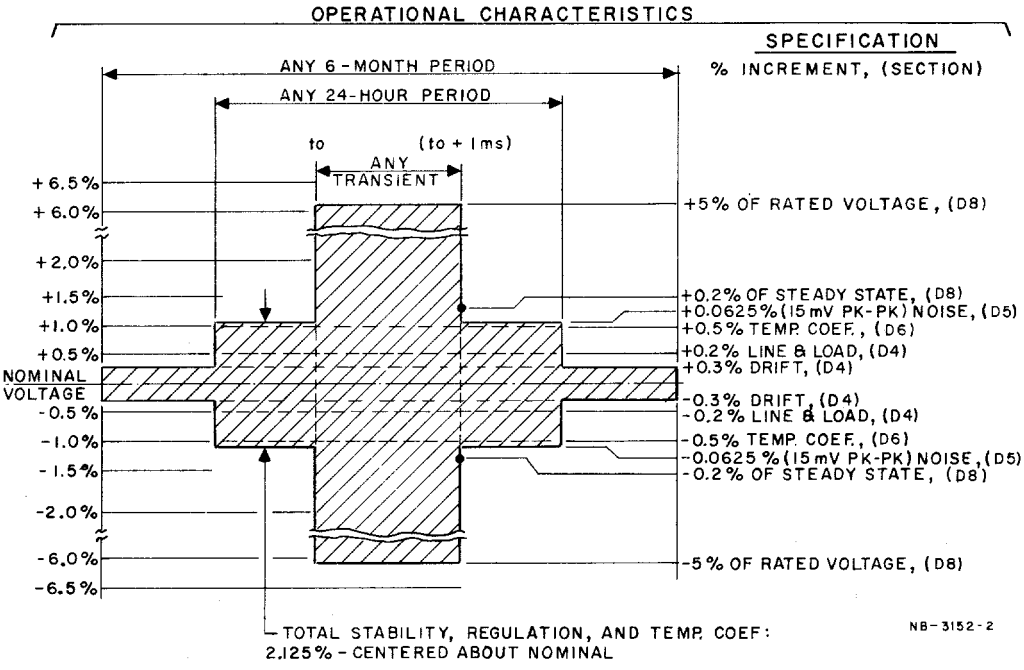

Figure D-4—Time and Voltage Characteristics, ±24 V

Copyright © 1982 IEEE All Rights Reserved

Copyright The Institute of Electrical and Electronics Engineers, Inc.
Provided by IHS under license with IEEE
No reproduction or networking permitted without license from IHS
Not for Resale

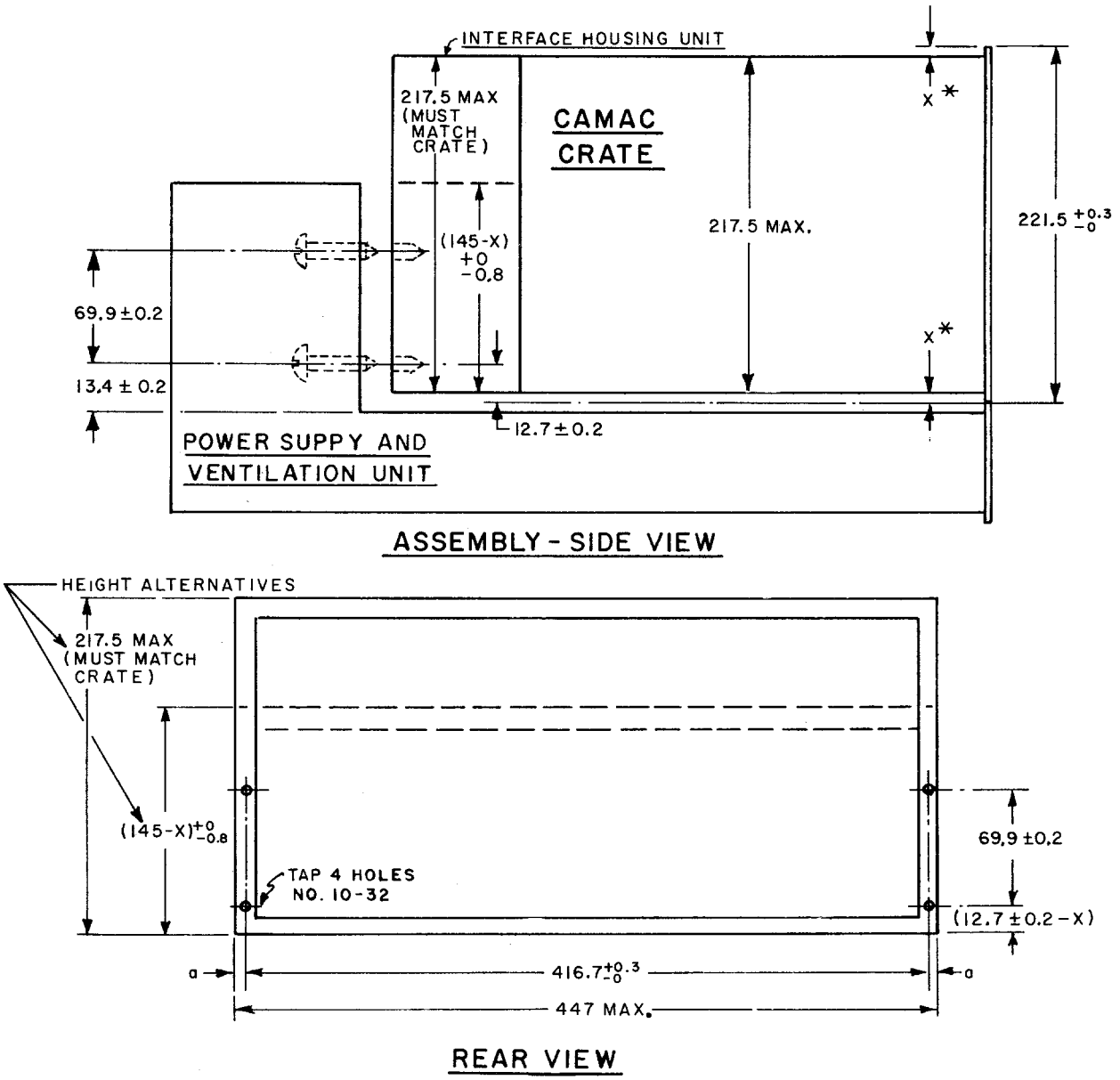

NOTES:

1 — Power section and ventilation section may be separable.

2 — Power section need not extend upward at rear of crate as shown; if not, brackets for attaching to rear of interface housing unit must be provided.

*Dimension varies with crates from different manufacturers.

Figure D-5—Interface Housing Unit

Copyright © 1982 IEEE All Rights Reserved

Copyright The Institute of Electrical and Electronics Engineers, Inc.
Provided by IHS under license with IEEE
No reproduction or networking permitted without license from IHS
Not for Resale

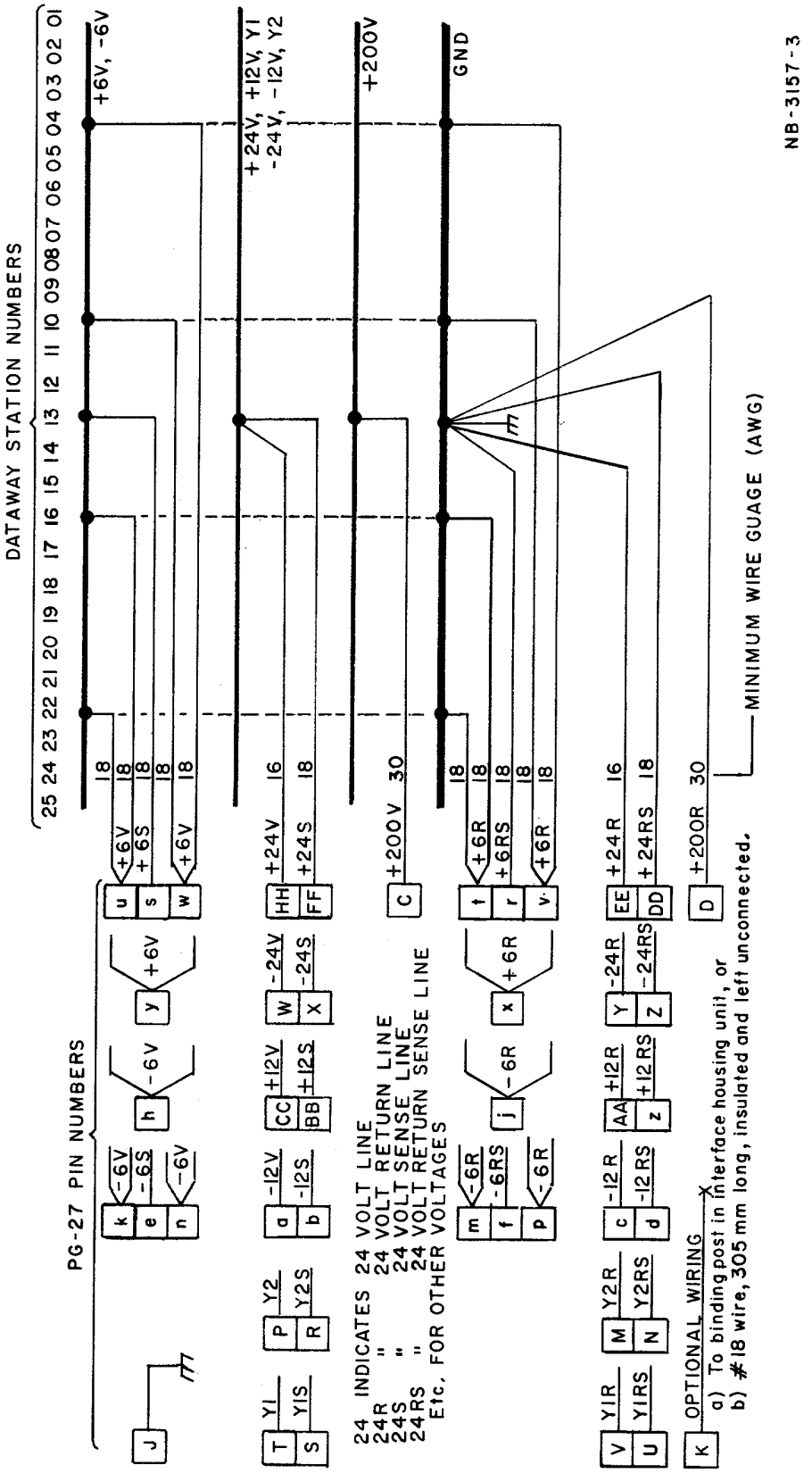

NOTES:

1 — Suitable Connectors are Described in Appendix C of IEEE Std 583.

2 — See note at the bottom of Section D21.

Figure D-6—Typical Power Buses and Power Return Bus, Feed, and Sense Wiring

Copyright © 1982 IEEE All Rights Reserved

Copyright The Institute of Electrical and Electronics Engineers, Inc.
Provided by IHS under license with IEEE
No reproduction or networking permitted without license from IHS

Not for Resale

Annex E Camac Categories (Informative)

CAMAC plug-in unit is a functional unit that conforms to the mandatory requirements for a plug-in unit as specified in this standard.

CAMAC module is a CAMAC plug-in unit that when mounted in one or more normal stations of a CAMAC crate is compatible with this standard.

CAMAC crate controller is a functional unit that when mounted in the control station and one or more normal stations of a CAMAC crate (or CAMAC compatible crate) communicates with the Dataway in accordance with this standard.

CAMAC Dataway is an interconnection between CAMAC plug-in units which conforms to the mandatory requirements for a CAMAC Dataway as specified in this standard.

CAMAC crate is a mounting unit for CAMAC plug-in units that includes a CAMAC Dataway and conforms to the mandatory requirements for a CAMAC crate as specified in this standard.

CAMAC compatible crate is a mounting unit for CAMAC plug-in units that does not conform to the full requirements for a CAMAC crate but in which CAMAC modules can be mounted and operated in accordance with the Dataway requirements of this standard.

CAMAC crate assembly is an assembly of a CAMAC crate controller and one or more CAMAC modules mounted in a CAMAC crate (or CAMAC compatible crate), and operable in conformity with the Dataway requirements of this standard.

CAMAC system is a system including at least one CAMAC crate assembly.

A highway for a CAMAC system is an interconnection between CAMAC crate assemblies or between one or more CAMAC crate assemblies and an external controller.

Copyright © 1982 IEEE All Rights Reserved

Copyright The Institute of Electrical and Electronics Engineers, Inc.
Provided by IHS under license with IEEE
No reproduction or networking permitted without license from IHS Not for Resale

Annex F Bibliography (Informative)

[1] COSTRELL, L. Standardized Instrumentation System for Computer Automated Measurement and Control. *IEEE Transactions on Industry Applications,* vol 1A-11, May/Jun 1975, pp 319–323 LYON, W.T., and ZOBRIST, D.W. System Design Considerations When Using Computer-Independent Hardware. *IEEE Transactions on Industry Applications,* vol 1A-11, May/Jun 1975, pp 324–327.

[2] WILLARD, F.G. Interfacing Standardization in the large Control System. *IEEE Transactions on Industry Applications,* vol 1A-11, Jul/Aug 1975, pp 362–364. JOERGER, F.A., and KLAISNER, L.A. Functional Instrumentation Modules, *IEEE Transactions on Industry Applications,* vol 1A-11, Nov/Dec 1975, pp 000–000 RADWAY, T.D. A Standardized Approach to Interfacing Stepping Motors to Computers. *IEEE Conference Record of the 1974 Ninth Annual Meeting of the IEEE Industry Applications Society,* Oct 7–10, Pittsburgh, PA, pp 257–259. KLAISNER, L.A. A Serial Data Highway for Remote Digital Control. IEEE Conference Record of the 1974 Ninth *Annual Meeting of the IEEE Industry Applications Society,* Oct 7–10, Pittsburgh, PA, pp 453–456. FASSBENDER, P., and BEARDEN, F. Demonstrating Process Control Standards An Exercise in success. *IEEE Conference Record* of the 1974 Ninth *Annual Meeting of the IEEE Industry Applications Society,* Oct 7–10, Pittsburgh, PA, pp 457–462.

[3] COSTRELL, L. The Nucleus. *IEEE Transactions on Nuclear Science,* vol NS-20, Apr 1973, p1. COSTRELL, L. CAMAC Instrumentation System Introduction and General Description. *IEEE Transactions on Nuclear Science,* vol NS-20, Apr 1973, pp 3–8. KIRSTEN, F.A. Operational Characteristics of the CAMAC Dataway. *IEEE Transactions on Nuclear Science,* vol NS-20, Apr 1973, pp 8–20. HORELICK, D. and LARSEN, R. S. CAMAC: A Modular Standard. *IEEE Spectrum,* Apr 1976, pp 50–55. KIRSTEN, F.A. A Short Description of the CAMAC Branch Highway. *IEEE Transactions on Nuclear Science,* vol NS-20, Apr 1973, pp 21–27. LARSEN, R.S. CAMAC Dataway and Branch Highway Signal Standards. *IEEE Transactions on Nuclear Science,* vol NS-20, Apr 1973, pp 28–34. DHAWAN, S. CAMAC Crate Controller Type A-1. *IEEE Transactions on Nuclear Science,* vol NS-20, Apr 1973, pp 35–41. KIRSTEN, F.A. Some Characteristics of Interfaces Between CAMAC and Small Computers. *IEEE Transactions on Nuclear Science,* vol NS-20, Apr 1973, pp 42–49. THOMAS, R.F., Jr. Some Aspects of CAMAC Software. *IEEE Transactions on Nuclear Science,* vol NS-20, Apr 1973, pp 50–68. MACK, D.A. Summary of CAMAC: Status and Outlook, *IEEE Transactions on Nuclear Science,* vol NS-20, Apr 1973, pp 69–71.

[4] Brill, A.B; Parker, J.F; Erickson, J.J; Price, R.R.; and Patton, J.A. CAMAC Applications in Nuclear Medicine of Vanderbilt: Present Status and Future Plans. IEEE Transactions on Nuclear Science, vol NS-21, Feb 1974, pp 892–897.

[5] EURATOM Report EUR 4100e, 1972, CAMAC - A Modular Instrumentation System for Data Handling, Description, and Specification. (Earlier edition was 1969.)

[6] U.S. Energy Research and Development Administration Report TID-25875, July 1972, CAMAC - A Modular Instrumentation System for Data Handling, Description and Specification.

[7] U.S. Energy Research and Development Administration Report TID-25877, Dec 1972, Supplementary Information on CAMAC Instrumentation system.

[8] U.S. Energy Research and Development Administration Report TID-26618, Oct 1976, CAMAC Tutorial Articles.

[9] U.S. Energy Research and Development Administration Report TID-20893, Rev 4, July 1974, Standard Nuclear Instrumentation Modules. (Earlier editions date from July 1964.)

 Copyright © 1982 IEEE All Rights Reserved

Copyright The Institute of Electrical and Electronics Engineers, Inc.
Provided by IHS under license with IEEE
No reproduction or networking permitted without license from IHS Not for Resale

Table 4 —The Function Codes

Code *F*( )	Function	Use of *R* and *W* Lines	Functional Signals *F*16	*F*8	*F*4	*F*2	*F*1	Code *F*( )
0	Read Group 1 register	Functions using the *R* lines	0	0	0	0	0	0
1	Read Group 2 register		0	0	0	0	1	1
2	Read and Clear Group 1 register		0	0	0	1	0	2
3	Read Complement of Group 1 register		0	0	0	1	1	3
4	Nonstandard		0	0	1	0	0	4
5	Reserved		0	0	1	0	1	5
6	Nonstandard		0	0	1	1	0	6
7	Reserved		0	0	1	1	1	7
8	Test Look-at-Me	Functions not using the *R* or *W* lines	0	1	0	0	0	8
9	Clear Group 1 register		0	1	0	0	1	9
10	Clear Look-at-Me		0	1	0	1	0	10
11	Clear Group 2 register		0	1	0	1	1	11
12	Nonstandard		0	1	1	0	0	12
13	Reserved		0	1	1	0	1	13
14	Nonstandard		0	1	1	1	0	14
15	Reserved		0	1	1	1	1	15
16	Overwrite Group 1 register	Functions using the *W* lines	1	0	0	0	0	16
17	Overwrite Group 2 register		1	0	0	0	1	17
18	Selective Set Group 1 register		1	0	0	1	0	18
19	Selective Set Group 2 register		1	0	0	1	1	19
20	Nonstandard		1	0	1	0	0	20
21	Selective Clear Group 1 register		1	0	1	0	1	21
22	Nonstandard		1	0	1	1	0	22
23	Selective Clear Group 2 register		1	0	1	1	1	23
24	Disable	Functions not using the *R* or *W* lines	1	1	0	0	0	24
25	Execute		1	1	0	0	1	25
26	Enable		1	1	0	1	0	26
27	Test Status		1	1	0	1	1	27
28	Nonstandard		1	1	1	0	0	28
29	Reserved		1	1	1	0	1	29
30	Nonstandard		1	1	1	1	0	30
31	Reserved		1	1	1	1	1	31

Since Table 4 is frequently referred to it is repeated here at the end of the Standard for the convenience of users.

Copyright © 1982 IEEE All Rights Reserved

Copyright The Institute of Electrical and Electronics Engineers, Inc.
Provided by IHS under license with IEEE
No reproduction or networking permitted without license from IHS
Not for Resale