IEEE Standard for Automatic Meter Reading Via Telephone—Network to Utility Controller

Sponsor

IEEE Standards Coordinating Committee 31
on
Automatic Meter Reading and Energy Management

Approved 18 March 1999

IEEE-SA Standards Board

Abstract: The telephone network interface to a utility controller operating under the utility telemetry service architecture is described. The interface is described in terms of a utility meter reading application but any enhanced service provider communication can be transported. Telemetry calls may be initiated by either the utility/service provider (outbound) or the telemetry interface unit (TIU)/CPE (inbound) on the end user's premises.
Keywords: automatic meter reading, energy management, enhanced service provider, meter reading, telemetry, telephone network, utility communication

---

The Institute of Electrical and Electronics Engineers, Inc.
345 East 47th Street, New York, NY 10017-2394, USA

Copyright © 1999 by the Institute of Electrical and Electronics Engineers, Inc.
All rights reserved. Published 10 June 1999. Printed in the United States of America.

Print: ISBN 0-7381-1644-0 SH94733
PDF: ISBN 0-7381-1645-9 SS94733

No part of this publication may be reproduced in any form, in an electronic retrieval system or otherwise, without the prior written permission of the publisher.

Copyright The Institute of Electrical and Electronics Engineers, Inc.
Provided by IHS under license with IEEE
No reproduction or networking permitted without license from IHS Not for Resale

IEEE Standards documents are developed within the IEEE Societies and the Standards Coordinating Committees of the IEEE Standards Association (IEEE-SA) Standards Board. Members of the committees serve voluntarily and without compensation. They are not necessarily members of the Institute. The standards developed within IEEE represent a consensus of the broad expertise on the subject within the Institute as well as those activities outside of IEEE that have expressed an interest in participating in the development of the standard.

Use of an IEEE Standard is wholly voluntary. The existence of an IEEE Standard does not imply that there are no other ways to produce, test, measure, purchase, market, or provide other goods and services related to the scope of the IEEE Standard. Furthermore, the viewpoint expressed at the time a standard is approved and issued is subject to change brought about through developments in the state of the art and comments received from users of the standard. Every IEEE Standard is subjected to review at least every five years for revision or reaffirmation. When a document is more than five years old and has not been reaffirmed, it is reasonable to conclude that its contents, although still of some value, do not wholly reflect the present state of the art. Users are cautioned to check to determine that they have the latest edition of any IEEE Standard.

Comments for revision of IEEE Standards are welcome from any interested party, regardless of membership affiliation with IEEE. Suggestions for changes in documents should be in the form of a proposed change of text, together with appropriate supporting comments.

Interpretations: Occasionally questions may arise regarding the meaning of portions of standards as they relate to specific applications. When the need for interpretations is brought to the attention of IEEE, the Institute will initiate action to prepare appropriate responses. Since IEEE Standards represent a consensus of all concerned interests, it is important to ensure that any interpretation has also received the concurrence of a balance of interests. For this reason, IEEE and the members of its societies and Standards Coordinating Committees are not able to provide an instant response to interpretation requests except in those cases where the matter has previously received formal consideration.

Comments on standards and requests for interpretations should be addressed to:

Secretary, IEEE-SA Standards Board
445 Hoes Lane
P.O. Box 1331
Piscataway, NJ 08855-1331
USA

Note: Attention is called to the possibility that implementation of this standard may require use of subject matter covered by patent rights. By publication of this standard, no position is taken with respect to the existence or validity of any patent rights in connection therewith. The IEEE shall not be responsible for identifying patents for which a license may be required by an IEEE standard or for conducting inquiries into the legal validity or scope of those patents that are brought to its attention.

Several patent holders have, however, filed a statement of assurance that they will grant a license under these rights without compensation or under reasonable rates of nondiscriminatory, reasonable terms and conditions to all applicants desiring to obtain such a license. The IEEE makes no representation as to the reasonableness of rates and/or terms and conditions of the license agreement offered by the patent holder. Contact information may be obtained from the IEEE Standards Department.

Authorization to photocopy portions of any individual standard for internal or personal use is granted by the Institute of Electrical and Electronics Engineers, Inc., provided that the appropriate fee is paid to Copyright Clearance Center. To arrange for payment of licensing fee, please contact Copyright Clearance Center, Customer Service, 222 Rosewood Drive, Danvers, MA 01923 USA; (978) 750-8400. Permission to photocopy portions of any individual standard for educational classroom use can also be obtained through the Copyright Clearance Center.

Copyright The Institute of Electrical and Electronics Engineers, Inc.
Provided by IHS under license with IEEE
No reproduction or networking permitted without license from IHS
Not for Resale

Introduction

(This introduction is not part of IEEE Std 1390.3-1999, IEEE Standard for Automatic Meter Reading Via Telephone—Network to Utility Controller.)

This publication was prepared by the TIU-Communications Interface Subcommittee, which is a technical committee of the IEEE Standards Coordinating Committee 31 for Automatic Meter Reading and Energy Management.

The subcommittee that prepared this standard consisted of the following people:

Howard A. Scott, *Chair*

Paul Aubin	Paul Hargaden	Matt Pierson
Dennis Burman	Dana Holmes	Dave Rose
Larry Carmichael	Alan Lowell	William F. Rush
Bernard Courville	Wade Malcolm	Jerome W. Schull
Donald Fisher	Mark Malmendier	Douglas Stewart
Stuart Garland	David Modisette	Dan Sugarman
Mike Gilbert	John E. Newbury	Michael Surratt
Greg Gomez	Daniel E. Nordell	Richard Tucker
Fred Gould	Diane Palmer	Ted York

The following members of the balloting committee voted on this standard:

Paul Aubin	Bruce Gray	William F. Rush
Don Beets	Paul Hargaden	Jerome W. Schull
Andrew Brock	Lawrence Kotewa	Howard Scott
William J. Buckley	Vuong Nguyen	Tushar Shah
Stuart Garland	Daniel E. Nordell	Michael Surratt

When the IEEE-SA Standards Board approved this standard on 18 March 1999, it had the following membership:

Richard J. Holleman, *Chair* **Donald N. Heirman,** *Vice Chair*

Judith Gorman, *Secretary*

Satish K. Aggarwal	James H. Gurney	L. Bruce McClung
Clyde R. Camp	Jim D. Isaak	Louis-François Pau
James T. Carlo	Lowell G. Johnson	Ronald C. Petersen
Gary R. Engmann	Robert Kennelly	Gerald H. Peterson
Harold E. Epstein	E. G. “Al” Kiener	John B. Posey
Jay Forster*	Joseph L. Koepfinger*	Gary S. Robinson
Thomas F. Garrity	Stephen R. Lambert	Hans E. Weinrich
Ruben D. Garzon	Jim Logothetis	Donald W. Zipse
	Donald C. Loughry	

*Member Emeritus

Greg Kohn

IEEE Standards Project Editor

Copyright © 1999 IEEE. All rights reserved.

Copyright The Institute of Electrical and Electronics Engineers, Inc.
Provided by IHS under license with IEEE
No reproduction or networking permitted without license from IHS
Not for Resale

Contents

1. Overview 1

1.1 Scope 1
1.2 Purpose 1

2. References 1

3. Definitions, abbreviations, and acronyms 2

3.1 Definitions 2
3.2 Acronyms and abbreviations 5

4. Utility telemetry service description 5

4.1 Feature description (Figure 1) 5
4.2 Telephone network access methods 7
4.3 Call initiation by utility or ESP 7
4.4 Call initiated by the TIU 8
4.5 TIU transmission methods 8
4.6 Telephone network technical requirements (TRs) 8

5. Utility controller unit functional requirements 8

5.1 Controller description 8
5.2 Functional requirements of the utility controller 9
5.3 Operating states 12

6. Utility controller network description 12

6.1 Utility controller network wiring configuration 12

7. Network interface—Physical 12

7.1 Tip-ring electrical characteristics 13
7.2 Ringer equivalence 13
7.3 Maintenance and diagnostics 13

8. Telephone network call origination (outbound) 13

9. Telephone network alerting (inbound) 13

10. Telephone network interface—Transmission 14

10.1 Modem type and speed or dual tone multiple frequency (DTMF) 14

11. Telephone network—Protocol 14

11.1 Security and encryption 14

Copyright © 1999 IEEE. All rights reserved.
Copyright The Institute of Electrical and Electronics Engineers, Inc.
Provided by IHS under license with IEEE
No reproduction or networking permitted without license from IHS
Not for Resale

12. Calls initiated by the utility or ESP (outbound—TIU off-hook transmission method) 15

12.1 COSU access method (Figure 2) 15
12.2 Direct dial access method (Figure 4) 18

13. Calls initiated by the TIU (inbound—TIU off-hook transmission method) 20

13.1 COSU access method (Figure 5 and Figure 6) 20
13.2 Direct dial access method (Figure 7) 22

14. Calls initiated by the utility or ESP (outbound—TIU on-hook transmission method) 24

14.1 COSU access method (Figure 8) 24

Annex A (informative) Bibliography 27

--`,,`-`-`,,`,,`,`,,`---
Copyright © 1999 IEEE. All rights reserved.

Copyright The Institute of Electrical and Electronics Engineers, Inc.
Provided by IHS under license with IEEE
No reproduction or networking permitted without license from IHS
Not for Resale

This page is intentionally blank.

and Electronics Engineers, Inc.
IEEE
itted without license from IHS
Not for Resale

IEEE Standard for Automatic Meter Reading Via Telephone—Network to Utility Controller

1. Overview

1.1 Scope

This standard describes the telephone network interface to a utility controller operating under the utility telemetry service architecture. The utility telemetry architecture is a basic transport architecture capable of supporting many different applications. Telemetry calls may be initiated from either the utility/enhanced service provider or the telemetry interface unit on the end user's premises. The two access methods defined for this service are the central office service unit access method and the direct dial access method. The two telemetry interface unit transmission methods defined for this service are the off-hook transmission method and the on-hook transmission method. The interface covered in this standard is described in terms of a basic utility meter-reading/controlling service. However, any number of other applications can be delivered using the telemetry transport service.

1.2 Purpose

The purpose of this standard is to provide a generic interface to a utility controller that is supported by the architecture of the utility telemetry service. The architecture will provide utilities a facility that is readily available, has short setup times, and allows for automatic meter reading using the capabilities of the switched telephone network. The architecture and interface will also support a multitude of different transport applications for other industries.

2. References

This standard shall be used in conjunction with the following publications. If the following standards are superseded by an approved revision, the revision shall apply.

ANSI T1401-1993, American National Standard for Telecommunications—Interface Between Carriers and Customer Installations—Analog Voicegrade Switched Access Lines Using Loop-Start and Ground-Start Signaling.[1]

[1]ANSI publications are available from the Sales Department, American National Standards Institute, 11 West 42nd Street, 13th Floor, New York, NY 10036, USA (http://www.ansi.org/).

Copyright © 1999 IEEE. All rights reserved.

Copyright The Institute of Electrical and Electronics Engineers, Inc.
Provided by IHS under license with IEEE
No reproduction or networking permitted without license from IHS
Not for Resale

Canadian Department of Communications CS-03: 1998, Terminal Equipment, Terminal Systems, Network Protection Devices, Connection Arrangements, and Hearing Aids Compatibility.[2]

Federal Communications Commission Rules and Regulations, Title 47, Part 68, Connection of Terminal Equipment to the Telephone Network.[3]

IEEE Std 820-1984 (Reaff 1992), IEEE Standard Telephone Loop Performance Characteristics.[4]

IEEE Std 1390-1995, IEEE Standard for Utility Telemetry Service Architecture for Switched Telephone Network.

IEEE P1390.2/D1, 26 March 1997, Draft Standard for Automatic Meter Reading Via Telephone—Network to Telemetry Interface Unit.[5]

3. Definitions, abbreviations, and acronyms

3.1 Definitions

Terms used in this standard are defined relative to their usage with respect to the architecture and interfaces of a basic utility telemetry service. IEEE Std 100-1996, The IEEE Standard Dictionary of Electrical and Electronics Terms, should be referenced for terms not defined in this clause.

3.1.1 abbreviated ringing: A short, variable burst of power ringing that is required to establish a temporary communications path in certain types of network pair-gain equipment. The switch is instructed, via trunk signals, to output this abbreviated ringing on the end user's line.

3.1.2 alert tone: A non-power ringing tone, or combination of tones, used to request the telemetry interface unit (TIU) or customer premise equipment (CPE) to become active.

3.1.3 alert tone code: A data byte that identifies which alert tone is to be used by the central office service unit (COSU).

3.1.4 automatic call distribution (ACD): A service that evenly distributes calls among incoming end user lines.

3.1.5 automatic number identification (ANI): A network service that delivers the phone number/billing number of the calling party.

3.1.6 call-type information (CTI) digits: Digits sent to the switch from the central office service unit (COSU) via signaling on the utility telemetry trunk, per call, which specify the customer premise equipment (CPE) transmission interface (i.e., on-hook or off-hook operation). These information digits are assigned, on a trunk group basis, through the switch administration procedures.

---

[2]This document is available from Global Engineering, 15 Inverness Way East, Englewood, CO 80112-5704, USA, tel. (303) 792-2181 (http://www.global.ihs.com/).

[3]FCC documents are available from the Federal Communications Commission, 445 12th Street S.W., Washington, D. C., 20554. Title 47 is freely available via the web at http://www.fcc.gov/wtb/rules.html.

[4]IEEE publications are available from the Institute of Electrical and Electronics Engineers, 445 Hoes Lane, P.O. Box 1331, Piscataway, NJ 08855-1331, USA (http://www.standards.ieee.org/).

[5]This IEEE standards project was not approved by the IEEE-SA Standards Board at the time this publication went to press. For information about obtaining a draft, contact the IEEE.

Copyright © 1999 IEEE. All rights reserved.
Copyright The Institute of Electrical and Electronics Engineers, Inc.
Provided by IHS under license with IEEE
No reproduction or networking permitted without license from IHS
Not for Resale

3.1.7 central office service unit (COSU): A telephone company controller resident in a central office that connects to the utility controller and, via the utility telemetry trunk, to the switch. The COSU provides the function of originating and terminating calls to and from telemetry interface units (TIUs). For the COSU access method, the COSU performs a security check with the utility controller and places a call to the end user in response to the information sent to it by the utility controller. The COSU performs a security check and initiates a connection to the utility controller when called by the TIU. The COSU also provides a multiplexing interface between the utility controller and COSU and the COSU and TIU(s). The COSU may also provide traffic measurements.

3.1.8 central office service unit (COSU) access method: An access method that utilizes the switched telephone network, comprised of a COSU, switch, and other network elements. This method provides for automatically invoking/ignoring certain switch-based telemetry communications capabilities and establishes a communications path between a utility/enhanced service provider (ESP) and a telemetry interface unit (TIU).

3.1.9 customer premise equipment (CPE): Equipment located on the customer's premise that is connected to the telephone line [e.g., telemetry interface unit (TIU), telephone, answering machine, modem].

3.1.10 customer premise equipment (CPE) active state: Occurs when the CPE has been alerted and is performing a communication function.

3.1.11 customer premise equipment (CPE) inactive state: Occurs when the CPE has completed its communication function.

3.1.12 cut-through: A transmission path through the switched telephone network to an end user.

3.1.13 digital loop carrier (DLC): Equipment that increases the number of end users served by existing loop side pairs by the use of digital multiplexing. These concentration systems are often called pair gain devices. Both universal and integrated DLCs may be used.

3.1.14 direct dial access method: Utilizes the switched telephone network, comprised of a switch and other network elements that establish a communications path between a utility/enhanced service provider (ESP) and a telemetry interface unit (TIU).

3.1.15 enhanced service provider (ESP): A service provider offering services through the telephone network using the telemetry transport capabilities to deliver their services.

3.1.16 in-band tones: Typically, a signal on the communication path in the range of 400–3300 Hz.

3.1.17 inbound telemetry: Communication initiated by a telemetry interface unit (TIU) toward a utility or enhanced service provider (ESP).

3.1.18 incoming calling line identification (ICLID): Provides calling party data on calls originated from both analog and digital lines.

3.1.19 independent telephone company: A company not associated with a regional Bell operating company (non-Bell operating company).

3.1.20 local access and transport area (LATA): A local telephone exchange area that serves to distinguish local phone service from long-distance phone service. Customers are served by a regional Bell operating company (RBOC) or other telephone company (OTC).

3.1.21 local loop: The communication path between the telephone company's switching office and the end user.

Copyright © 1999 IEEE. All rights reserved.

Copyright The Institute of Electrical and Electronics Engineers, Inc.
Provided by IHS under license with IEEE
No reproduction or networking permitted without license from IHS Not for Resale

3.1.22 loop current feed open (LCFO): A Bellcore-defined, switch generated, fixed open (no voltage) on the line within the range of 150–350 ms as sent by the switch. Its purpose is to signal certain digital loop carrier (DLC) devices to assign a time slot (transmission path) for a 15 s interval.

3.1.23 modified calling line disconnect: A telephone network feature that, if the end user is off-hook, requires the end user's line to go on-hook before receiving a dial tone from the telephone network.

3.1.24 multiline hunt group (MLHG): A group of lines that have a fixed alternate routing should one or more of the lines in the group be busy.

3.1.25 network interface (demarcation point): The point of connection between the local loop and the end user's (customer provided) wiring.

3.1.26 no-test trunk: A specialized switch facility used by the operator and service personnel for metallic testing of a subscriber's telephone lines (also known as a test trunk facility).

3.1.27 no-test trunk access method: Used to connect to an end user's line, the no-test trunk access method contains a direct metallic path and is primarily used for loop and customer premise equipment (CPE) testing purposes.

3.1.28 on-hook/off-hook: Signaling conditions on a line in the form of dc impedance presented to the local loop by the telemetry interface unit (TIU). Off-hook implies that the TIU is in a low resistance state and is allowing significant current to flow. On-hook implies that the TIU is in a high resistance state and is not allowing significant current to flow. See ANSI T1401-1993 and the local access and transport area (LATA) Switching Systems Generic Requirements (LSSGR), Section 6.2.2, Bell Communications Research (Bellcore) for more detail.

3.1.29 outbound telemetry: Communication initiated by a utility or an enhanced service provider (ESP) toward a telemetry interface unit (TIU).

3.1.30 polarity guard: A device that guarantees proper tip/ring polarity.

3.1.31 post disconnect timing: A timing interval (normally about 12 s in length), initiated when the called party goes on-hook, in which the established connection remains in place as long as the calling party continues to remain off-hook.

3.1.32 regional Bell operating company (RBOC): A regional telephone company that may or may not be made up of individual operating companies.

3.1.33 technical advisory (TA): A telephone company publication intended to disclose information and request comments regarding network services.

3.1.34 telemetry interface unit (TIU): A customer premise equipment (CPE) device that provides a network gateway function and an interface to one or more meters (water, gas, and electric), other telemetry/control devices, or to a local area network. The TIU may be placed in series with or bridged onto the local loop assigned to the end user. Because the TIUs are not network elements, but are regarded as CPE, they are connected to the end user's line (tip/ring) of the local loop at the network interface. In existing systems, these units are also known as meter interface units (MIU).

3.1.35 technical requirements (TR): A telephone company publication intended to disclose information and operation regarding network services.

3.1.36 utility controller (UC): A controller resident on a utility or enhanced service provider (ESP) premise that connects, via the telephone network, to the telemetry interface unit (TIU) (using the direct dial network

Copyright © 1999 IEEE. All rights reserved.
Copyright The Institute of Electrical and Electronics Engineers, Inc.
Provided by IHS under license with IEEE
No reproduction or networking permitted without license from IHS
Not for Resale

access method) or the central office service unit (COSU) (using the COSU network access method or the no-test trunk network access method).

3.1.37 utility telemetry trunk (UTT): A two-way telephone company facility connecting the central office service unit (COSU) to the switch. This facility allows a utility or enhanced service provider (ESP), via the telephone network (COSU), to automatically invoke/ignore certain telephone network capabilities as well as provide a suppressed or abbreviated ringing access to telemetry interface units (TIUs) on an end user's line. The TIU may also originate calls through the telephone network (COSU and switch), which will automatically invoke/ignore certain telephone network capabilities and provide a connection to the utility or ESP.

3.1.38 wink: A momentary off-hook condition in telephone trunk signaling. A wink may have different meanings depending on where it is used in the signaling stream (i.e., start or connect).

3.2 Acronyms and abbreviations

ACD	automatic call distribution
AMR	automatic meter reading
ANI	automatic number identification
COSU	central office service unit
CPE	customer premise equipment
CTI	call type information
DLC	digital loop carrier
ESP	enhanced service provider
LATA	local access and transport area
LFCO	loop current feed open
LSSGR	LATA Switching Systems Generic Requirements
MIU	meter interface units
MLHG	multiline hunt group
NI	network interface
OTC	other telephone company
RBOC	regional Bell operating company
TA	technical advisory
TIU	telemetry interface unit
TR	technical requirements
UC	utility controller
UTS	utility telemetry service
UTT	utility telemetry trunk

4. Utility telemetry service description

4.1 Feature description (Figure 1)

The analog feature allows for the transport of data between a utility or an enhanced service provider (ESP) and an end user's telemetry interface unit (TIU) or other customer premise equipment (CPE) device attached to the telephone line. Communications may be established by the utility/ESP or TIU. Communication connections from the utility/ESP to the telephone network shall utilize the switched network, private networks, packet networks, or telephone company gateways with combinations of networks set up for efficient communications.

Copyright © 1999 IEEE. All rights reserved.

Copyright The Institute of Electrical and Electronics Engineers, Inc.
Provided by IHS under license with IEEE
No reproduction or networking permitted without license from IHS Not for Resale

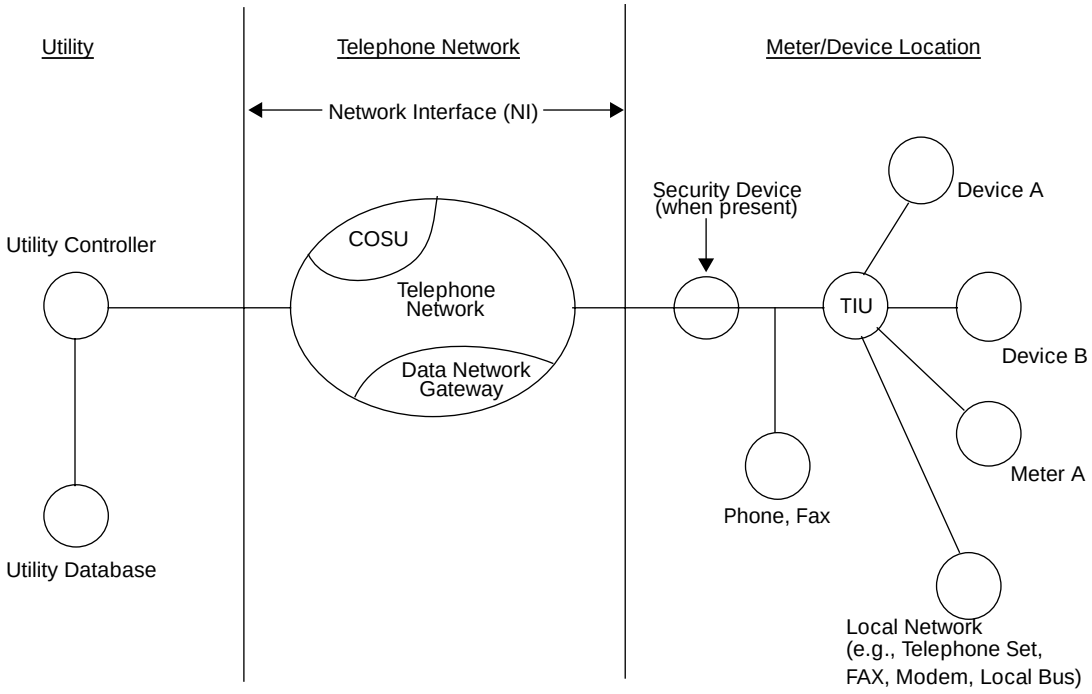

Figure 1—Utility telemetry service architecture for telephone network communications

Automatic meter reading (AMR) is used to describe the utility telemetry service (UTS). AMR is the most popular use for the UTS feature today. There are, however, other applications that will take advantage of a suppressed ringing end user access or a CPE device that initiates calls from the end user's premise. An example of utility-initiated (outbound) applications could include utility-initiated direct control of remote devices (i.e., resource shut-off), ESP-initiated messaging (i.e., voice mail message waiting notification), or ESP-initiated appliance diagnosis. Examples of TIU-initiated (inbound) calling devices are end-user security systems, end-user medical alert systems, utility load control systems, and smart appliances. Smart appliances may initiate calls to service bureaus based on internal maintenance routines or to provide usage-sensitive billing. Calls to the utility/ESP may also be connected to telephone-company-provided multiline hunt groups or automatic call distribution (ACD) services for more efficient communications capability.

The telephone end user whose line is being used for UTS is typically not alerted (i.e., by an audible signal) that a utility telemetry call is in process. Also, calling priority is always given to the end user. When the utility or ESP calls the TIU using the central office service unit (COSU) access method, the end user's line is alerted by a signal that does not operate the end users CPE ringer. The direct dial access method will cause the end user's ringer to be operated. Additionally, the TIU must go on-hook (off-hook transmission method) or go to the idle state (on-hook transmission method) if the end user goes off-hook (except for security devices, as described in other sections). The end user will only become aware of the utility/ESP call if dialing or data transmission is heard or a delayed dial tone is detected.

Various components and protocols of the UTS are the subject of other IEEE standards (e.g., IEEE Std 1390-1995; IEEE P1390.1/AMR.5/99-001, 3 February 1999; IEEE P1390.2/D1, 26 March 1997).

Multiple TIUs, as well as other end-user CPE, may be present on a single end user's line. Each TIU may access one or more ports, which are connected to the devices requiring communications capability.

Copyright © 1999 IEEE. All rights reserved.
Copyright The Institute of Electrical and Electronics Engineers, Inc.
Provided by IHS under license with IEEE
No reproduction or networking permitted without license from IHS
Not for Resale

To completely describe the progress of the telemetry call and the differences between the identified network access methods, it is important to describe certain internal telephone network operations. Internal telephone network operations are controlled by the local telephone company and are fully defined in local telephone company technical documents.

4.2 Telephone network access methods

The COSU access method and direct dial access methods shall coexist with each other and one TIU may implement both access methods.

4.2.1 COSU access method

When the COSU access method is utilized, the utility controller may use a variety of connections to the telephone network. Examples of these connection methods are switched network connection to the COSU network element, a direct connection, a high-speed digital connection, or a network gateway element. The choice of connection methods is engineered by the telephone company and utility, based on expected traffic and other parameters to provide for efficient communication.

The call shall be handled by the COSU-switch combination, which shall allow for automatic invoking/ignoring of certain switch-based telemetry communications capabilities. For example, this access method will provide a connection to a line that has a valid directory number but the connection has been denied because of vacation service or financial reasons. These communications capabilities are covered by the technical documents issued by regional Bell operating companies (RBOC) or independent telephone companies.

4.2.2 Direct dial access method

When the direct dial access method is utilized the utility controller will only use the switched telephone network to connect to the TIU.

The call shall proceed through the existing switched network and activate those communications capabilities that can be activated by the end user. The call may be affected by network features assigned to the line. For example, the TIU may activate/deactivate selected telephone network (switch) features assigned to the end user's line, as an end user would, with a sequence of dialed digits for each feature. These communications capabilities are covered by the technical documents issued by a RBOC or an independent telephone company.

4.3 Call initiation by utility or ESP

4.3.1 Using the COSU access method

The utility controller will access the telephone network via the chosen telephone network access. A communications path will be established between the utility controller and the telephone network (COSU). A security dialog will take place. If the security dialog is successful, the call will be connected using the COSU network element. The telephone network (COSU) will establish a suppressed ringing connection to the end user's line, allowing communications with the TIU. The TIU shall be alerted by the telephone network [using alert tone(s) and subaddresses]. Data is exchanged in either direction. When the data exchange is completed, the telephone network (COSU) causes the telephone network (switch) to disconnect from the end user's line.

Copyright © 1999 IEEE. All rights reserved.

Copyright The Institute of Electrical and Electronics Engineers, Inc.
Provided by IHS under license with IEEE
No reproduction or networking permitted without license from IHS Not for Resale

4.3.2 Using the direct dial access method

The utility controller will access the switched telephone network and dial the TIU directly using the standard telephone network capabilities. Several defacto techniques have been implemented to cause the TIU to become active and either answer the call or dial back to the utility/ESP.

4.4 Call initiated by the TIU

The TIU initiates a call by going off-hook and dialing a preprogrammed series of digits. With either the COSU access method or the direct dial access method, the call shall be connected, via the telephone network, to the utility or ESP. Data is exchanged in either direction and the call is disconnected.

4.5 TIU transmission methods

4.5.1 Off-hook transmission method

When the off-hook transmission method is utilized, and the TIU is alerted or wakes up and becomes active, the TIU goes off-hook, causing a bidirectional communications path to be established through loopside elements and the switch. While the TIU is communicating, the TIU is off-hook. During communications, the switch cannot detect multiple off-hook signals from the end user's line (the TIU is already off-hook). Should the end user go off-hook during a telemetry call, the TIU or telephone network (COSU) must detect the end user's off-hook condition and cause action to disconnect the utility call.

4.5.2 On-hook transmission method

When the on-hook transmission method is utilized, and the TIU is alerted or wakes up and becomes active, the TIU remains on-hook and becomes active. The telephone network assumes a bidirectional communications path to be established though selected loopside elements and the switch. While the TIU is communicating, the TIU is on-hook. Should the end user go off-hook during a telemetry call, the telephone network (switch) will detect the end user's off-hook signal and cause action to disconnect the utility call. The telephone network (switch) is able to detect this off-hook signal since there are no other TIU (or other CPE devices) in an off-hook state on the end user's line.

4.6 Telephone network technical requirements (TRs)

There are no Bellcore technical advisories or technical requirements on this subject.

The RBOC technical advisories/technical requirements documents are listed in Table 1.

5. Utility controller unit functional requirements

5.1 Controller description

The utility controller is a device that resides on the premises of the utility or ESP. On one end, the utility controller is connected to the telephone network through a variety of standard data connection means. On the other end, the utility controller may be connected to the utility operations computers. The utility controller may or may not be connected to other utility or ESP components.

IEEE Std 1390.3-1999 standardizes the utility controller interface to the telephone network. The utility controller itself may be the subject of separate standards.

--`,,`-`-`,,`,,`,`,,`---

Copyright © 1999 IEEE. All rights reserved.
Copyright The Institute of Electrical and Electronics Engineers, Inc.
Provided by IHS under license with IEEE
No reproduction or networking permitted without license from IHS Not for Resale

Existing TIUs, called meter interface units (MIUs), may continue to be used and may coexist with the UTS. Existing TIUs (MIUs) are not described in this standard. The utility controller may have to support the existing TIUs.

Table 1—RBOC Technical Advisories/Technical Requirements documents

Company	No-test trunk no.	UTS no.	Title
BellSouth	TR 73547	TA 73565	Automatic meter reading services network interface specification
Bell Atlantic	TR 72015	—	BellAtlantic automatic meter reading service interface specification
Ameritech	TR MKT 000035	AMTA-TMO-000098	Ameritech automatic meter reading service interface specifications
NYNEX	NTR-74310	—	Meter reading access arrangement
Southwestern Bell	draft dated 12/90	—	—
US West	77328	—	Automatic meter reading service interface specifications

5.2 Functional requirements of the utility controller

5.2.1 General

The utility controller must conform to all U.S. Federal Communications Commission (FCC) regulations or Canadian Department of Communications regulations that are appropriate for this type of device.

The utility controller must conform to the regulations of the operating companies serving the end user's line.

5.2.2 Physical

The utility controller must connect to the telephone network (COSU) via standard data connections (switched network, packet network, high-speed digital network, network gateway, or private line). These connections are described in IEEE Std 1390-1995; IEEE P1390.1/AMR.5/99-001, 3 February 1999; and IEEE P1390.2/D1, 26 March 1999.

The utility controller connection to the utility operations computers may be the subject of other IEEE standards (e.g., IEEE Std 1390-1995; IEEE P1390.1/AMR.5/99-001, 3 February 1999; and IEEE P1390.2/D1, 26 March 1999).

5.2.3 Link

The TIU is alerted by the telephone network (COSU) based on parameters passed to the telephone network (COSU) by the utility controller.

With the COSU access method, the utility controller will initiate communications by going off-hook, becoming active, and presenting the following:

a) Directory number
b) TIU identifier
c) On-hook and off-hook TIU transmission type
d) Identification of the proper alert frequency
e) Subaddress (if present)
f) Abbreviated ring duration or loop current feed open parameter to the telephone network (COSU)

Copyright © 1999 IEEE. All rights reserved.

Copyright The Institute of Electrical and Electronics Engineers, Inc.
Provided by IHS under license with IEEE
No reproduction or networking permitted without license from IHS
Not for Resale

With the direct dial access method, the utility controller will initiate communications by going off-hook, becoming active, and dialing a directory number.

A dial-back connection or other technique may be implemented for security between the utility controller and the telephone network (COSU). The security dialog is the subject of a future standard.

Both off-hook and on-hook TIU transmission methods are covered in this standard as well as IEEE Std 1390-1995; IEEE P1390.1/AMR.5/99-001, 3 February 1999; and IEEE Std 1390.2/D1, 26 March 1997.

The utility controller/telephone network (COSU) and telephone network (switch)/TIU protocol interworkings are defined in the IEEE P1390.1/AMR.5/99-001, 3 February 1999; telephone company technical requirements; and other specifications.

The telephone network (switch) will enforce the maximum TIU/COSU connect time as defined by the telephone company service provider.

The utility controller must support either a network connection to the telephone network (COSU) or a network connection to a network gateway.

With the COSU access method, if alerted with power ringing, the utility controller shall go off-hook and become active.

With the direct dial access method, when alerted with power ringing, the utility controller shall go off-hook and become active.

With the COSU access method, the utility controller may initiate calls with the telephone network. Multiple calls may be placed during a single off-hook session.

With the direct dial access method, the utility controller may initiate calls with the telephone network. Only one call may be placed during a single off-hook session.

The utility controller shall go on-hook and become inactive:

a) By its own initiative (end of data, error recovery, etc.);
b) From a loss of carrier;
c) From a disconnect signal in the data stream; and
d) A maximum of 600 ms after the start of a disconnect signal (800 ms open) from the telephone network.

At the end of the 800 ms disconnect signal, the telephone network (switch) must look for an off-hook signal from the utility controller. If an off-hook signal exists, the telephone network (switch) must deliver a dial tone to the utility controller line.

5.2.4 Application

With the COSU access method, the utility controller must be connected to the telephone network (COSU) or network gateway. The utility controller will not have a through connection to the end user's line and will not supervise the utility telemetry trunk (UTT).

With the direct dial access method, the utility controller is directly connected to the end user's line.

End user TIU communications elements are stored in the utility controller database. For the COSU access method, examples of these elements are as follows:

Copyright © 1999 IEEE. All rights reserved.
Copyright The Institute of Electrical and Electronics Engineers, Inc.
Provided by IHS under license with IEEE
No reproduction or networking permitted without license from IHS
Not for Resale

a) Directory number
b) On-hook and off-hook TIU transmission type
c) Port number
d) Alert tone(s)
e) Subaddresses (if present)
f) Abbreviated ring duration/loop current feed open

For the direct dial access method, examples of these elements are directory number, port number, and so forth.

With the COSU access method, the telephone network (COSU) may perform TIU data screening based on the utility controller's incoming ICLID data, if available. This screening may be used to deliver specific meter/device data to a specific calling party (i.e., deliver electric meter data to the electric utility).

Recovery from interruptions to the telemetry data stream shall be handled by the utility controller and/or the telephone network (COSU).

The utility controller may have to support several TIUs on each end user's line, as well as multiple subaddresses on a single TIU. With the COSU access method, the utility controller shall support the multiplexing of data on a single telephone connection between the utility controller and the telephone network (COSU). This connection maybe single threaded or multithreaded.

The utility controller and telephone network (COSU) shall abide by specific recommendation rules set forth FCC and Canadian Department of Communication (DOC), as required. Examples of such rules are as follows. Reconnection to a TUI after a connection is interrupted (i.e., the end user goes off-hook etc.) should not be attempted for a period of time. If the next attempted call is interrupted again, reconnection should not be attempted for a longer period of time. Reconnection times should be made longer for successive interruptions. At some point, manual intervention will be required. An example of where this situation may apply is with calls to 911 (emergency calls). If a utility telemetry call is in progress and the end user goes off-hook to call 911, the end user may hear data and go on-hook to clear the line. If the utility were to immediately reconnect, the end user may be blocked from making the 911 call. This situation may occur with any call. Only one TIU on/off-hook transition (off-hook transmission method) or TIU active/inactive transition (on-hook transmission method) is allowed per telemetry call. No immediate reseizure of the TIU line is allowed.

Other calling restrictions, such as those found with automated telemarketing equipment, may apply to the UTS.

The utility controller will transmit to and/or from the telephone network (COSU) using standard data communications techniques. The telephone network (switch) will be transparent to this data.

There are four utility telemetry service disconnect scenarios described in IEEE Std 1390-1995. The first is a call disconnect, where the telephone network (COSU) initiates an on-hook to the telephone network (switch). The telephone network (COSU) initiates this on-hook signal based on its own internal information or a signal from the utility controller. The second is when the telephone network (switch) determines that a call must be disconnected. The third is when the end user goes off-hook. The fourth is when the TIU goes on-hook (off-hook transmission method) and there are no other off-hook signals present on the line. The utility controller requirements are described in this standard.

Multiple TIUs are allowed on the same line. There must be installation coordination between the TIUs so that the alert tone destined for one TIU shall not falsely alert another TIU. A single TIU may be receptive to one or more alert tones and subaddresses (if present).

--`,,`-`-`,,`,,`,`,,`---
Copyright © 1999 IEEE. All rights reserved.

Copyright The Institute of Electrical and Electronics Engineers, Inc.
Provided by IHS under license with IEEE
No reproduction or networking permitted without license from IHS
Not for Resale

5.3 Operating states

5.3.1 Activation

To move from the inactive state to the active state, the utility controller must wake up. The utility controller must go off-hook (switched network, private line) or provide a start signal (packet network).

5.3.2 Deactivation

The utility controller must move from the active state to the inactive state when one or more of the following occur:

a) A network disconnect is received;
b) A disconnect message is detected; or
c) An internal disconnect is detected (error recovery, etc.).

In response to these occurrences, the utility controller will either go on-hook (switched network or private line) or provide an end signal (packet network).

6. Utility controller network description

The utility controller must conform to the regulations of the operating companies serving the end user's line. Adequate protection is required in the utility controller to prevent harm to the telephone network and telecommunications equipment. The utility controller must conform to all FCC Regulations or Canadian DOC regulations that are appropriate for this type of device. Standard harms requirements apply.

Failure of the utility controller shall not prevent an end user from placing or receiving a call.

6.1 Utility controller network wiring configuration

Standard network wiring configurations shall be used.

6.1.1 Direct connection

A direct connection to the telephone network shall take the form of several standard telephone network wiring techniques.

6.1.2 Modem connection

A modem connection to the telephone network shall take the form of a modem connected to the telephone network. The modem shall support one or more of the modems identified in 10.1.

7. Network interface—Physical

The utility controller must conform to the regulations of the telephone companies serving the end user's line. Adequate protection is required in the utility controller to prevent harm to the telephone network and telecommunications equipment. The utility controller must conform to all FCC regulations or other Canadian DOC regulations that are appropriate for this type of device. Standard harms requirements apply. The utility controller should have a polarity guard.

Copyright © 1999 IEEE. All rights reserved.
Copyright The Institute of Electrical and Electronics Engineers, Inc.
Provided by IHS under license with IEEE
No reproduction or networking permitted without license from IHS
Not for Resale

Failure of the utility controller shall not prevent an end user from placing or receiving a call.

7.1 Tip-ring electrical characteristics

The electrical characteristics of the telephone loop facility being connected to are defined in CCITT documents[6] as decribed in Table 2 or documents from the telephone service providers.

7.2 Ringer equivalence

The normal ringer equivalence number (REN) limit of five shall apply.

7.3 Maintenance and diagnostics

Maintenance and diagnostic tests such as a self test, loop-back test, or maintenance test with diagnostics are designated as future standards efforts.

8. Telephone network call origination (outbound)

With the COSU access method, the utility controller goes off-hook. The utility controller waits for a dial tone or times out. Upon receipt of dial tone (or a time-out), the utility controller shall present the directory number for the destination telephone network (COSU). After connection to the COSU, the remainder of the parameters are presented to the telephone network (COSU).

With the direct dial access method, the utility controller goes off-hook. The utility controller waits for a dial tone or times out. Upon receipt of dial tone (or a time-out), the utility controller shall present the directory number for the destination TIU. After being directly connected to the TIU, bidirectional communications take place.

9. Telephone network alerting (inbound)

When using the COSU access method, the utility controller is alerted by one or more cycles of power ringing with subaddresses (if present) or messages depending on the type of connection to the telephone network.

When using the direct dial access method, the utility controller is alerted by one or more cycles of power ringing.

When the utility controller is alerted by power ringing, the power ringing may be standard network ringing or distinctive ringing. Caller identification (ID) type information may be present in the silent interval of the power ringing cycle.

TIU subaddressing information to the utility controller will always appear in the data stream (see IEEE P1390.1/AMR.5/99-001, 3 February 1999).

[6]CCITT publications are available from the International Telecommunications Union, Sales Section, Place des Nations, CH-1211, Genève 20, Switzerland/Suisse (http://www.itu.int/). They are also available in the United States from the U.S. Department of Commerce, Technology Administration, National Technical Information Service (NTIS), Springfield, VA 22161, USA.

--`,,`-`-`,,`,,`,`,,`---
Copyright © 1999 IEEE. All rights reserved.

Copyright The Institute of Electrical and Electronics Engineers, Inc.
Provided by IHS under license with IEEE
No reproduction or networking permitted without license from IHS Not for Resale

10. Telephone network interface—Transmission

Communications over the telephone network will be conducted over the standard voice grade lines and trunks.

10.1 Modem type and speed or dual tone multiple frequency (DTMF)

Communications with the network may be conducted by modem or DTMF signals. Modem implementations utilize voice band modems conforming to those listed in Table 2.

Table 2—Modem type and speed of DTMF

Modem type	Speed	CCITT V.xx series
Bell 103/113	300 BPS	V.21
Bell 202	1200 BPS	—
Bell 212	1200 BPS	V.22
	2400 BPS	V.22bis
	4800 BPS	—
	9600 BPS	V.24
	14 400 BPS	V.32bis
	28 800 BPS	V.34bis
	38 800 BPS	V.34.bis

Auto-speed adjusting modems are supported.

DTMF implementations utilize the telephone network standard DTMF frequencies.

11. Telephone network—Protocol

The data terminal equipment/data communications equipment (DTE/DCE) electrical specifications are identified in CCITT V.42.

IEEE P1390.1/AMR.5/99-001, 3 February 1999 identifies the DTMF data protocol.

11.1 Security and encryption

Each TIU shall have a built-in security ID for transmission with the call-flow information. Port addresses may also be sent with the call-flow information. This information is found in IEEE P1390.1/AMR.5/99-001, 3 Feburary 1999.

Copyright © 1999 IEEE. All rights reserved.
Copyright The Institute of Electrical and Electronics Engineers, Inc.
Provided by IHS under license with IEEE
No reproduction or networking permitted without license from IHS
Not for Resale

A telephone network standards document, under development by Standards Coordinating Committee 31, identifies the utility controller encryption techniques.

12. Calls initiated by the utility or ESP (outbound—TIU off-hook transmission method)

12.1 COSU access method (Figure 2)

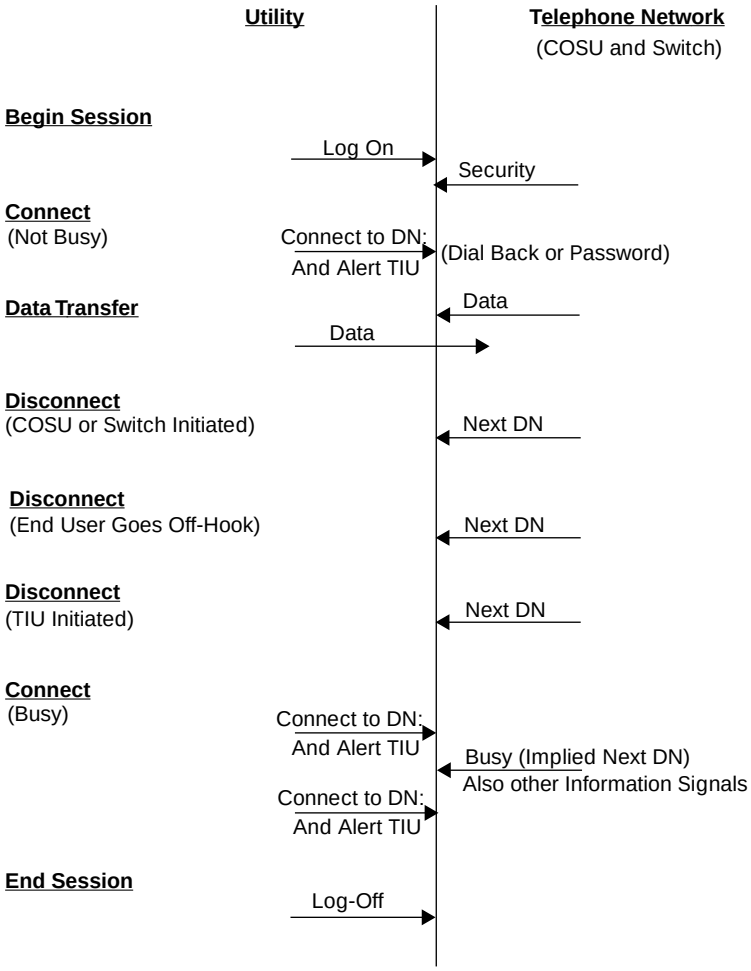

Figure 2—Utility telemetry service call, initiated by the utility, COSU access method (off-hook TIU)

12.1.1 Billing for calls

The telephone network (switch) produces a billing record that charges the utility telephone number for the call.

--`,-`-`,,`,,`,`,,`---
Copyright © 1999 IEEE. All rights reserved.

Copyright The Institute of Electrical and Electronics Engineers, Inc.
Provided by IHS under license with IEEE
No reproduction or networking permitted without license from IHS
Not for Resale

12.1.2 Begin session

The utility controller will initiate a connection with the telephone network (COSU). The utility controller and telephone network (COSU) will perform a security check (passwords or dial back). If the connection to the telephone network (COSU) is busy, the utility controller will receive a busy signal or other network not available signals.

12.1.3 Utility telemetry call connect (line not busy)

Once the telemetry session has begun, the utility controller will need to provide the telephone network (COSU) with the destination address (directory number), TIU identification, TIU transmission method indicators, abbreviated ring or loop current feed open indication, and the alert-tone code required for reading each meter. Depending on the utility controller to telephone network protocol requirements, one or more TIU connection requests may be presented at one time. Based on the connection request(s) presented, the telephone network will connect to the end user's line and alert the TIU. If the telephone network (COSU)/ TIU security check is accepted, the telemetry data transfer stage is entered.

12.1.4 Utility telemetry call connect (line busy or other not available conditions)

If the line containing the TIU is busy or not available, the telephone network will not connect to the end user's line. IEEE P1390.1/AMR.5/99-001, 3 February 1999, defines the responses to be sent to the utility controller under these conditions.

12.1.5 Utility telemetry call data transfer

One-way or two-way data communications may be initiated.

12.1.6 Utility telemetry call disconnect (Figure 3)

The utility controller, when operating on the switched network, is required to go on-hook and become inactive when one of several events take place. Other utility controller/telephone network connections may require different techniques for disconnecting a single TIU since multiplexing of data will be allowed on some connection paths. Depending on the utility controller/telephone network connection protocol, this disconnect may be defined as an automatic request for the next TIU connection record.

The utility controller shall not cycle a TIU on/off-hook during a single telemetry call. Only one TIU on-hook or off-hook cycle is allowed per telemetry call. Immediate reseizure of the TIU line is not allowed.

12.1.6.1 End user or end user CPE goes off-hook

When communicating, the TIU and/or telephone network (COSU) must detect when the end user (or CPE) goes off-hook. When the end user off-hook is detected, the telephone network (COSU) initiates a call disconnect. The COSU will signal the utility controller that this disconnect has occurred.

12.1.6.2 Disconnect signal from telephone network (COSU or switch)

The network will, at various times, send an 800 ms disconnect signal to the line containing the TIU or the utility controller. The telephone network, depending on features assigned to the line, may also disconnect the data transfer connection. Upon receipt of this disconnect signal, the utility controller must go on-hook and become inactive within 600 ms from the start of the disconnect signal. Utility controller recovery conditions may be required.

Copyright © 1999 IEEE. All rights reserved.
Copyright The Institute of Electrical and Electronics Engineers, Inc.
Provided by IHS under license with IEEE
No reproduction or networking permitted without license from IHS
Not for Resale

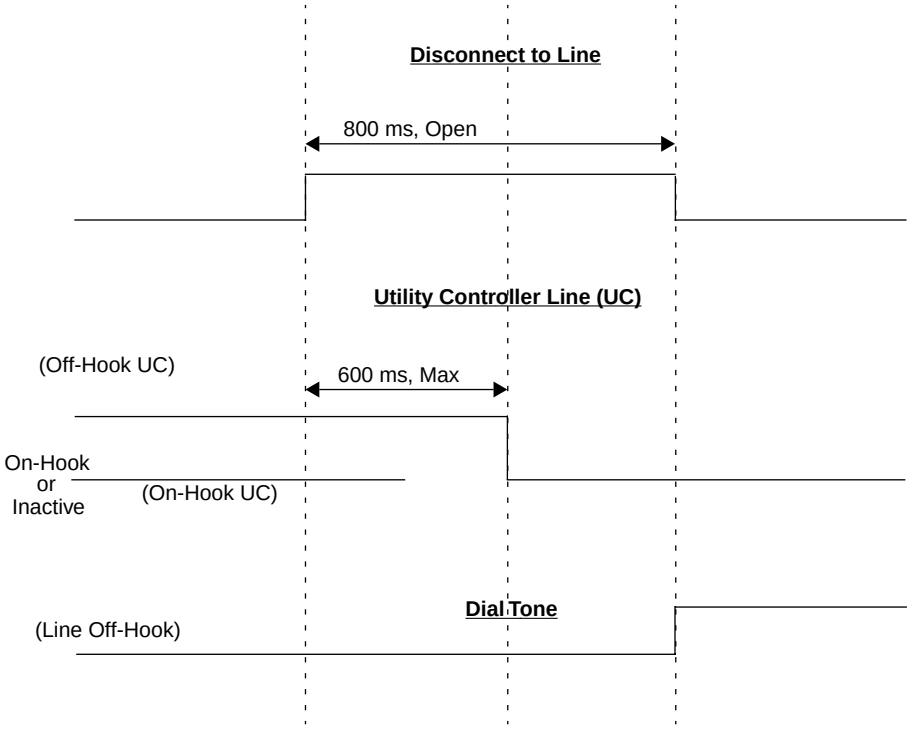

Figure 3—Utility telemetry service disconnect timing

12.1.6.3 Disconnect information element in data stream

As part of the data communications protocol, the utility controller may receive a disconnect command. If connected to the switched network upon receipt of this command, the utility controller, if connected point to point, immediately goes on-hook and becomes inactive. If the utility controller is connected in a multiplexed or multiple session technique, only that session will become inactive.

12.1.6.4 Disconnect from the TIU

When the TIU goes on-hook, the telephone network will take the telemetry call down. The telephone network (COSU) will signal the utility controller that this disconnect has occurred.

12.1.6.5 Loss of carrier or line

When loss of carrier or telephone network line is detected and the utility controller is connected to the switched telephone network, the utility controller must immediately go on-hook and become inactive. Internal utility controller recovery actions may be required.

12.1.7 End session

At some point, the utility controller or telephone network (COSU) terminates the communications via the telephone network.

Copyright © 1999 IEEE. All rights reserved.

Copyright The Institute of Electrical and Electronics Engineers, Inc.
Provided by IHS under license with IEEE
No reproduction or networking permitted without license from IHS Not for Resale

12.2 Direct dial access method (Figure 4)

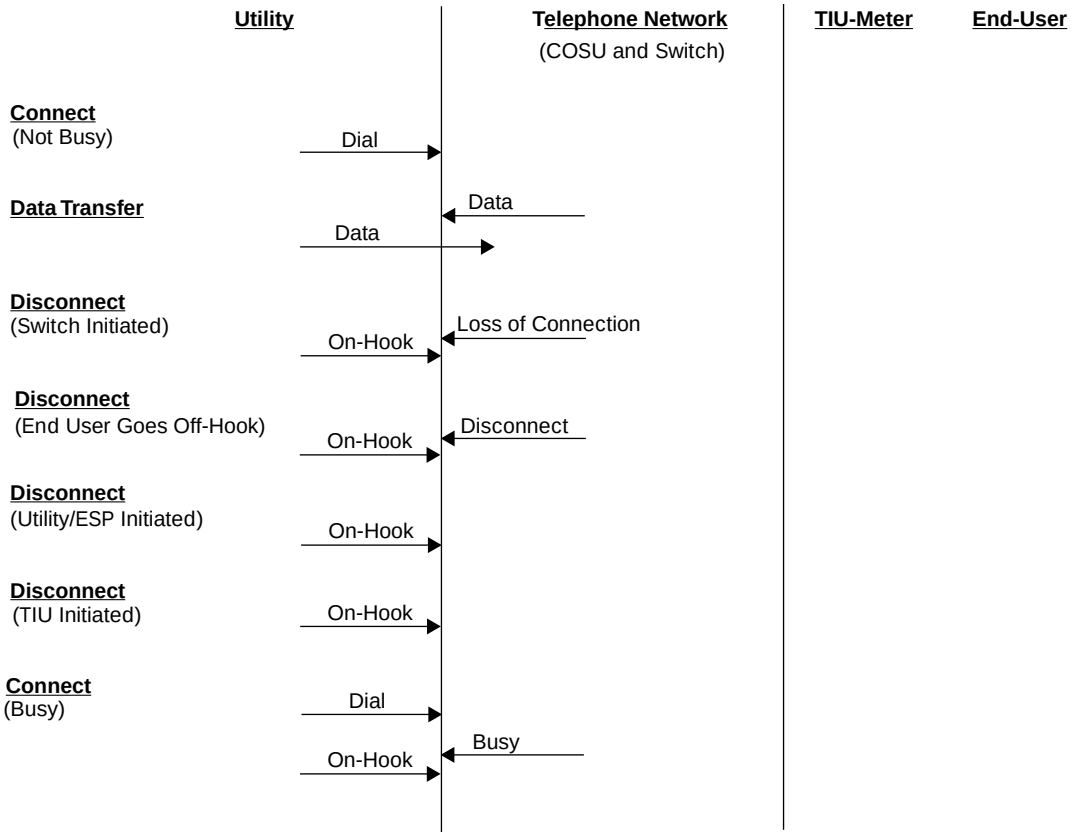

Figure 4—Utility telemetry service call, initiated by the utility, direct dial access method

12.2.1 Billing for calls

The utility telephone number is directly billed for initiating this type of call.

12.2.2 Utility telemetry call-connect alert and data transfer (not busy)

The utility controller initiates a ringing connection, via the switched telephone network, with the end user's line.

NOTE—The call may be diverted to another directory number if the end user has certain features active on the line such as call forwarding.

A number of different techniques have been implemented to cause the TIU to go off-hook and become active. Depending on the technique employed, the TIU either answers the call or dials back the utility/ESP. If a later call-back is required, the technique described in Clause 13 should be used.

One-way or two-way communications may be initiated.

Copyright © 1999 IEEE. All rights reserved.
Copyright The Institute of Electrical and Electronics Engineers, Inc.
Provided by IHS under license with IEEE
No reproduction or networking permitted without license from IHS
Not for Resale

12.2.3 Utility telemetry call disconnect

When connected via the switched telephone network, the utility controller is required to go on-hook and become inactive when one of several events take place. The utility controller shall not cycle the TIU on-hook or off-hook during a single telemetry call. Only one TIU on-hook or off-hook cycle is allowed per telemetry call. Immediate reseizure of the TIU line is not allowed.

12.2.3.1 End user or end user's CPE goes off-hook

When communicating, the TIU must detect when the end user (or CPE) goes off-hook. When the TIU detects the end user's off-hook condition, the TIU must communicate this change to the utility controller. The utility controller then goes on-hook, which will terminate the switched network call. The TIU goes on-hook and becomes inactive. The telephone network (switch), sensing an off-hook remaining on the line, delivers a dial tone to the end user. Note, if the modified calling-line disconnect feature is assigned to the line, the telephone network will require the line to go on-hook prior to delivery of a dial tone. The telephone network (COSU) will signal the utility controller that this disconnect has occurred.

12.2.3.2 Disconnect signal from telephone network (switch)

The network will, at various times, send an 800 ms disconnect signal to the utility controller line. Upon receipt of this disconnect signal, the utility controller must go on-hook and become inactive within 600 ms from the start of the disconnect signal. Utility controller recovery conditions may be required.

12.2.3.3 Disconnect information element In data stream

As part of the data communications protocol, the utility controller may receive a disconnect command. When connected via the switched telephone network, the utility controller immediately goes on-hook and becomes inactive.

12.2.3.4 Disconnect from TIU

At the completion of the telemetry data transfer, the TIU automatically goes on-hook and becomes inactive or waits for a command from the utility controller. When the TIU goes on-hook, the telephone network will take the telemetry call down. If the TIU goes on-hook and the utility controller remains off-hook, the telephone network will not disconnect the call due to post-disconnect timing. The call will be disconnected at the end of the post-disconnect timing period or when the utility controller goes on-hook, whichever occurs first.

12.2.3.5 Loss of carrier or line

When loss of carrier or telephone line is detected and the utility controller is connected to the switch telephone network, the utility controller must immediately go on-hook and become inactive. Internal utility controller recovery may be required.

12.2.4 Utility telemetry call connect (busy or other not available conditions)

When the end user's line is busy, a ringing connection is not established with the end user's line. The utility/ESP may receive a busy signal or other network-not-available signals, and may ring if the end user has call waiting, or may be diverted to another directory number if the end user has call forwarding or busy active on the line.

Copyright © 1999 IEEE. All rights reserved.

Copyright The Institute of Electrical and Electronics Engineers, Inc.
Provided by IHS under license with IEEE
No reproduction or networking permitted without license from IHS
Not for Resale

13. Calls initiated by the TIU (inbound—TIU off-hook transmission method)

13.1 COSU access method (Figure 5 and Figure 6)

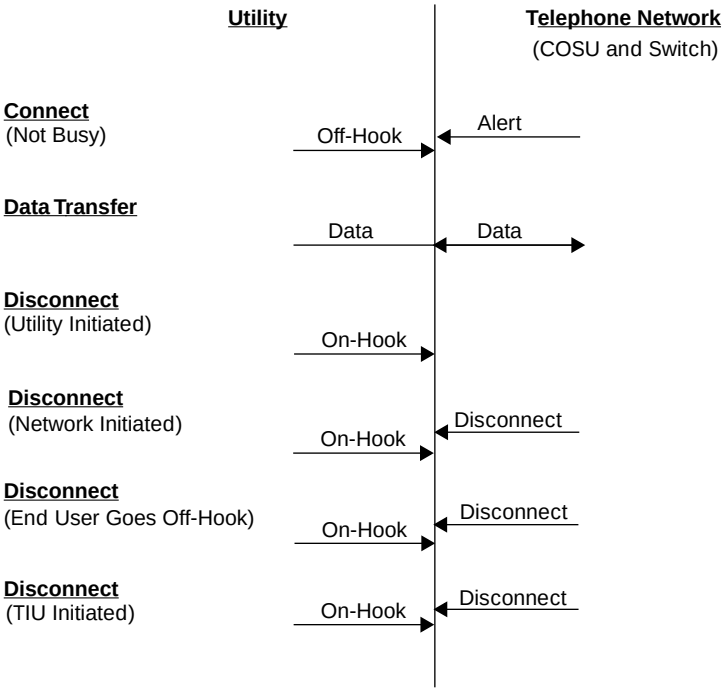

Figure 5—Utility telemetry service call, initiated by the TIU, COSU access method (off-hook TIU)

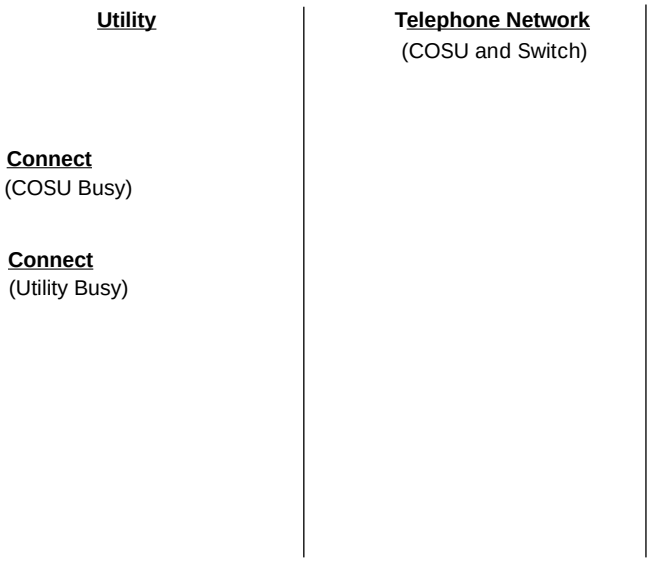

Figure 6—Utility telemetry service call, initiated by the TIU, direct dial access method

Copyright © 1999 IEEE. All rights reserved.
Copyright The Institute of Electrical and Electronics Engineers, Inc.
Provided by IHS under license with IEEE
No reproduction or networking permitted without license from IHS
Not for Resale

13.1.1 Billing for calls

All inbound calls are allowed since the telephone network (switch) produces a billing record charging the utility directory number (reverse charging).

13.1.2 Utility telemetry call connect (line not busy)

The TIU initiates communications using the following techniques.

The TIU, after detecting an idle line, goes off-hook, becomes active, waits for a dial tone, and dials the utility or ESP by presenting an access code to the telephone network. At the second dial tone, the TIU sends the telephone network (COSU) directory number and the utility/ESP directory number to the telephone network. This first connection with the telephone network (COSU) allows for a security check to take place between the telephone network (COSU) and TIU. If the security check is accepted, the telephone network (COSU) initiates a connection to the required utility or ESP and enters the telemetry data transfer stage. If the security check is not accepted, the call is disconnected. If there is no answer from the telephone network (COSU) or utility, the TIU shall go on-hook and become inactive.

If the utility controller and telephone network is connected in a point-to-point technique, the switched telephone network then initiates a connection to the utility controller using the following techniques. The utility controller will be alerted by one or more cycles of power ringing with optional subaddresses. The power ringing will be standard network ringing or distinctive ringing. Caller ID may be included in the silent interval of the power ringing cycle. Depending on the utility controller/telephone network connection protocol, this connection may be initiated by a message in the data stream.

If the utility controller and telephone network are connected using multiplexed or multiple-session techniques, communications to the utility controller will be initiated by a session initiation technique.

13.1.3 Utility telemetry call data transfer

One-way or two-way communications may be initiated.

13.1.4 Utility telemetry call disconnect

When operating on the switched telephone network, the utility controller is required to go on-hook and become inactive when one of several events take place. The utility controller shall not cycle the TIU on-hook or off-hook during a single telemetry call. Only one TIU on-hook or off-hook cycle is allowed per telemetry call. Immediate reseizure of the TIU line is not allowed.

13.1.4.1 End user or end user’s CPE goes off-hook

The intent of this subclause is to give telephone line capabilities to the end user when the end user (or an end user’s CPE) requests service by going off-hook without the end user doing anything special to gain access to the telephone line. When communicating, the TIU and/or telephone network (COSU) must detect when the end user (or CPE) goes off-hook. The telephone network (COSU) initiates call disconnect. The TIU goes on-hook and becomes inactive. The telephone network (COSU) will signal the utility controller that this disconnect has occurred.

13.1.4.2 Disconnect signal from telephone network (switch)

The network will, at various times, send an 800 ms disconnect signal to the utility controller’s line. Upon receipt of this disconnect signal, the utility controller must go on-hook and become inactive within 600 ms from the start of the disconnect signal. The telephone network (COSU) disconnects the utility controller from the telephone network connection.

Copyright © 1999 IEEE. All rights reserved.

Copyright The Institute of Electrical and Electronics Engineers, Inc.
Provided by IHS under license with IEEE
No reproduction or networking permitted without license from IHS
Not for Resale

13.1.4.3 Disconnect information element In data stream

As part of the data communications protocol defined in other standards documents, the utility controller may receive a disconnect command. Upon receipt of this command, the utility controller, if connected in a point-to-point technique, immediately goes on-hook and becomes inactive. If the utility controller is connected in a multiplexed or multiple-session technique, only that session will become inactive.

13.1.4.4 Loss of carrier or line

When loss of carrier or the telephone network line is detected, the utility controller must immediately go on-hook and become inactive. Internal utility controller recovery actions may be required.

13.1.4.5 Disconnect by the TIU

At the completion of the telemetry data transfer, the TIU automatically goes on-hook and becomes inactive or waits for a command from the utility controller. The TIU may go on-hook and become inactive based on other conditions. When the TIU goes on-hook, the telephone network will remove the call.

13.1.5 Utility telemetry call connect (busy and other unavailable conditions)

If the utility/ESP or COSU directory number is busy, the TIU will receive a busy signal. The TIU immediately goes on-hook and becomes inactive. The TIU may also receive a reorder tone (480 Hz + 620 Hz at 120 IPM) for temporary conditions or a Permanent Signal Tone (480 Hz steady) for unavailable conditions.

13.2 Direct dial access method (Figure 7)

13.2.1 Billing for calls

If no local billing arrangements can be made or there is a charge for the call, only toll-free number calls or third-party charge calls (credit card calls) will be allowed by the telephone network.

13.2.2 Utility telemetry call connect (not busy)

The TIU, after detection of an idle line, goes off-hook, becomes active, and dials the utility or ESP directly. The TIU may also dial end-user-activated access codes that may activate or deactivate end user network features. A switched network connection is made with the directory number.

13.2.3 Utility telemetry call data transfer

One-way or two-way data communications may be initiated.

13.2.4 Utility telemetry call disconnect

The utility controller is required to go on-hook and become inactive when one of several events take place. The utility controller shall not cycle the TIU on-hook or off-hook during a single telemetry call. Only one TIU on-hook or off-hook cycle is allowed per telemetry call. Immediate reseizure of the TIU line is not allowed.

Copyright © 1999 IEEE. All rights reserved.
Copyright The Institute of Electrical and Electronics Engineers, Inc.
Provided by IHS under license with IEEE
No reproduction or networking permitted without license from IHS
Not for Resale

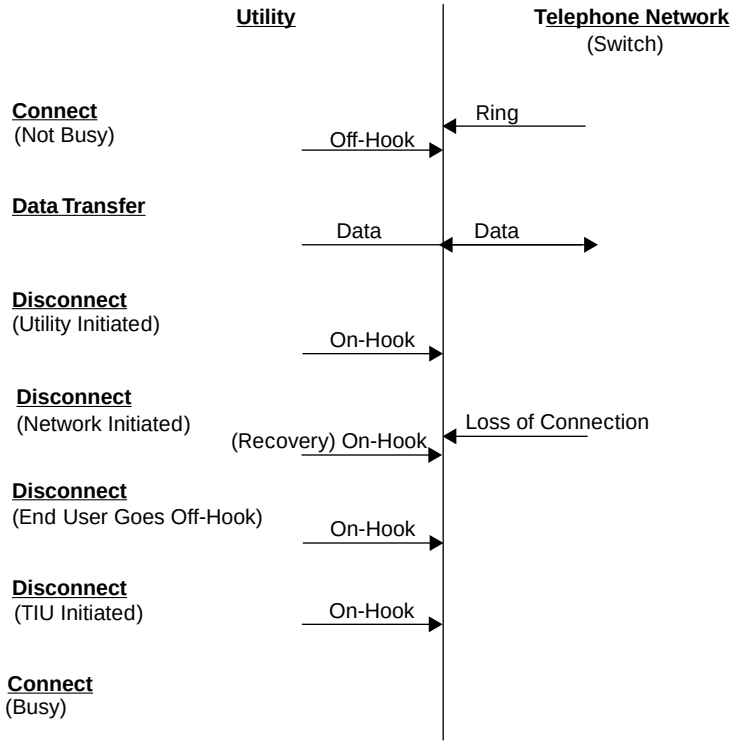

Figure 7—Utility telemetry service call, initiated by the utility, COSU access method (on-hook TIU)

13.2.4.1 End user or end user's CPE goes off-hook

The intent of this subclause is to give telephone-line capabilities to the end user when an end user (or end user CPE) requests service by going off-hook without the end user doing anything special to gain access to the telephone line. When communicating, the TIU must detect when the end user (or CPE) goes off-hook. The TIU must communicate this change to the utility controller. Upon detecting the end user (or CPE) off-hook, the TIU goes on-hook and becomes inactive. In response, the utility controller goes on-hook and becomes inactive. When the TIU becomes inactive, the telephone network (COSU) will take the telemetry call down. The telephone network (COSU) will signal the utility controller that this disconnect has occurred. The telephone network (switch), sensing an off-hook remaining on the line, delivers a dial tone to the end user.

13.2.4.2 Disconnect signal from telephone network (switch)

The network will, at various times, send an 800 ms disconnect signal to the line. This disconnect signal is to insure that all CPE devices clear the line. Upon receipt of this disconnect signal, the TIU and utility controller must go on-hook and become inactive within 600 ms after the start of the disconnect signal.

13.2.4.3 Disconnect information element In data stream

As part of the data communications protocol defined in other standards documents, the utility controller may receive a disconnect command. Upon receipt of this command, the utility controller immediately goes on-hook and becomes inactive.

Copyright © 1999 IEEE. All rights reserved.

Copyright The Institute of Electrical and Electronics Engineers, Inc.
Provided by IHS under license with IEEE
No reproduction or networking permitted without license from IHS
Not for Resale

13.2.4.4 Loss of carrier or line

When loss of carrier or telephone line connection is detected, the utility controller must immediately go on-hook and become inactive. Internal utility controller recovery techniques may be required.

13.2.4.5 Disconnect by the TIU

At the completion of the telemetry data transmission, the TIU automatically goes on-hook and becomes inactive or waits for a command from the utility controller. The TIU may go on-hook and become inactive based on other conditions. When the TIU goes on-hook, the telephone network will take the telemetry call down.

13.2.5 Utility telemetry call connect (busy and other unavailable conditions)

If the utility/ESP directory number is busy or unavailable, the TIU will receive a busy signal. The TIU immediately goes on-hook and becomes inactive. The TIU may also receive other telephone network standard tones, including announcements.

14. Calls initiated by the utility or ESP (outbound—TIU on-hook transmission method)

14.1 COSU access method (Figure 8)

14.1.1 Billing for calls

The telephone network (switch) produces a billing record that charges the utility telephone number for this type of call.

14.1.2 Begin session

The utility controller must initiate a connection with the telephone network (COSU). The utility controller and telephone network (COSU) will perform a security check (passwords or dial-back). If the connection to the telephone network (COSU) is busy, the utility controller must receive a busy signal or other network not available signals.

14.1.3 Utility telemetry call connect (line not busy)

Once the telemetry session has begun, the telephone network (COSU) will need from the utility controller the destination address (directory number), TIU identification, TIU transmission method indicators, abbreviated ring or loop-current feed-open indication, and the alert-tone code required for reading each meter. Depending on the utility controller/telephone network protocol requirements, one or more TIU connection requests may be presented at one time. If the telephone network (COSU)/TIU security check is accepted, the telemetry data transfer stage is entered. Based on the connection request(s) presented, the telephone network will connect to the end user’s line and alert the TIU. The TIU becomes active but remains on-hook.

14.1.4 Utility telemetry call data transfer

One-way or two-way data communications may be initiated.

--`,,`-`-`,,`,,`,`,,`---

Copyright © 1999 IEEE. All rights reserved.
Copyright The Institute of Electrical and Electronics Engineers, Inc.
Provided by IHS under license with IEEE
No reproduction or networking permitted without license from IHS
Not for Resale

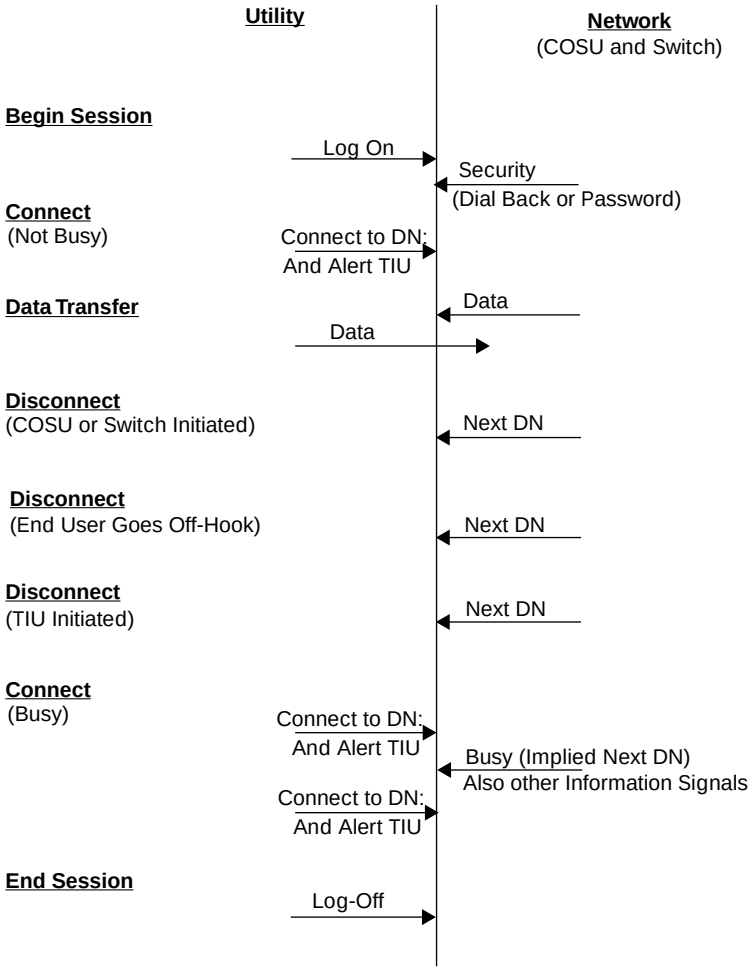

Figure 8—Utility telemetry service, call initiated by the utility, COSU acces method (on-hook TIU)

14.1.5 Utility telemetry call disconnect

The utility controller, when operating on the switch telephone network, is required to go on-hook and become inactive when one of several events take place. Other utility controller-telephone network connections may require different techniques for disconnecting a single TIU since multiplexing of data will be allowed on some connection paths. Depending on the utility controller/telephone network connection protocol, this disconnect may be defined as an automatic request for the next TIU connection record.

The utility controller shall not cycle the TIU active/inactive during a single telemetry call. Only one TIU active/inactive cycle is allowed per telemetry call. Immediate reseizure of the TIU line is not allowed.

14.1.5.1 End user goes off-hook

The intent of this section is to give telephone line capabilities to the end user when an end user requests service by going off-hook without the end user doing anything special to gain access to the telephone line. When communicating, the telephone network (switch) must detect when the end user goes off-hook. The telephone network (switch) initiates a telemetry call disconnect. The TIU becomes inactive. The telephone network (COSU) will signal the utility controller that this disconnect has occurred.

Copyright © 1999 IEEE. All rights reserved.

Copyright The Institute of Electrical and Electronics Engineers, Inc.
Provided by IHS under license with IEEE
No reproduction or networking permitted without license from IHS
Not for Resale

14.1.5.2 Disconnect signal from telephone network (COSU or switch)

The network will, at various times, send an 800 ms disconnect signal to the line containing the TIU or the utility controller. Upon receipt of this disconnect signal, the signaled utility controller must go on-hook and become inactive within 600 ms from the start of the disconnect signal. Upon receipt of this disconnect signal, the signaled TIU becomes inactive (it is already on-hook). The utility controller may require recovery conditions to occur.

14.1.5.3 Disconnect information element In data stream

As part of the data communications protocol, the utility controller may receive a disconnect command. Upon receipt of this command, if connected to the switched network, the utility controller immediately goes on-hook and becomes inactive.

14.1.5.4 Disconnect from the TIU

When the TIU becomes inactive, the telephone network will take the telemetry call down.

14.1.5.5 Loss of carrier or line

When loss of carrier or telephone network line is detected and the utility controller is connected to the switched network, the utility controller must immediately go on-hook and become inactive. Internal utility controller recovery actions may be required.

14.1.6 End session

At some point, the utility controller or telephone network (COSU) terminates the communications via the telephone network.

Copyright © 1999 IEEE. All rights reserved.
Copyright The Institute of Electrical and Electronics Engineers, Inc.
Provided by IHS under license with IEEE
No reproduction or networking permitted without license from IHS
Not for Resale

Annex A

(informative)

Bibliography

[B1] Bellcore PUB 41005, Data communications using the switched telecommunications network.

[B2] Bellcore PUB 41008, Analog parameters affecting voiceband data transmission—Description of parameters.

[B3] Bellcore TR-TSY-000506, LATA switching systems generic requirements (LSSGR), Section 6—Signaling.

Copyright © 1999 IEEE. All rights reserved.

Copyright The Institute of Electrical and Electronics Engineers, Inc.
Provided by IHS under license with IEEE
No reproduction or networking permitted without license from IHS
Not for Resale