IEEE Standard for Automatic Meter Reading Via Telephone—Network to Telemetry Interface Unit

Sponsor

IEEE Standards Coordinating Committee 31
on
Automatic Meter Reading and Energy Management

Approved 2 July 1999

IEEE-SA Standards Board

Abstract: The telephone network interface to a telemetry interface unit operating under the utility telemetry service architecture is described. The interface is described in terms of a utility meter reading application, but any enhanced service provider communication can be transported. Telemetry calls may be initiated by either the utility/enhanced service provider (outbound) or the telemetry Interface unit/customer premise equipment (inbound) on the end user's premise.
Keywords: automatic meter reading, energy management, enhanced service provider, meter reading, telemetry interface unit, telephone network, utility communication

---

The Institute of Electrical and Electronics Engineers, Inc.
3 Park Avenue, New York, NY 10016-5997, USA

Copyright © 1999 by the Institute of Electrical and Electronics Engineers, Inc.
All rights reserved. Published 3 September 1999. Printed in the United States of America.

Print: ISBN 0-7381-1763-3 SH94765
PDF: ISBN 0-7381-1764-1 SS94765

No part of this publication may be reproduced in any form, in an electronic retrieval system or otherwise, without the prior written permission of the publisher.

Copyright The Institute of Electrical and Electronics Engineers, Inc.
Provided by IHS under license with IEEE
No reproduction or networking permitted without license from IHS Not for Resale

IEEE Standards documents are developed within the IEEE Societies and the Standards Coordinating Committees of the IEEE Standards Association (IEEE-SA) Standards Board. Members of the committees serve voluntarily and without compensation. They are not necessarily members of the Institute. The standards developed within IEEE represent a consensus of the broad expertise on the subject within the Institute as well as those activities outside of IEEE that have expressed an interest in participating in the development of the standard.

Use of an IEEE Standard is wholly voluntary. The existence of an IEEE Standard does not imply that there are no other ways to produce, test, measure, purchase, market, or provide other goods and services related to the scope of the IEEE Standard. Furthermore, the viewpoint expressed at the time a standard is approved and issued is subject to change brought about through developments in the state of the art and comments received from users of the standard. Every IEEE Standard is subjected to review at least every five years for revision or reaffirmation. When a document is more than five years old and has not been reaffirmed, it is reasonable to conclude that its contents, although still of some value, do not wholly reflect the present state of the art. Users are cautioned to check to determine that they have the latest edition of any IEEE Standard.

Comments for revision of IEEE Standards are welcome from any interested party, regardless of membership affiliation with IEEE. Suggestions for changes in documents should be in the form of a proposed change of text, together with appropriate supporting comments.

Interpretations: Occasionally questions may arise regarding the meaning of portions of standards as they relate to specific applications. When the need for interpretations is brought to the attention of IEEE, the Institute will initiate action to prepare appropriate responses. Since IEEE Standards represent a consensus of all concerned interests, it is important to ensure that any interpretation has also received the concurrence of a balance of interests. For this reason, IEEE and the members of its societies and Standards Coordinating Committees are not able to provide an instant response to interpretation requests except in those cases where the matter has previously received formal consideration.

Comments on standards and requests for interpretations should be addressed to:

Secretary, IEEE-SA Standards Board
445 Hoes Lane
P.O. Box 1331
Piscataway, NJ 08855-1331
USA

Note: Attention is called to the possibility that implementation of this standard may require use of subject matter covered by patent rights. By publication of this standard, no position is taken with respect to the existence or validity of any patent rights in connection therewith. The IEEE shall not be responsible for identifying patents for which a license may be required by an IEEE standard or for conducting inquiries into the legal validity or scope of those patents that are brought to its attention.

Several patent holders have, however, filed a statement of assurance that they will grant a license under these rights without compensation or under reasonable rates of nondiscriminatory, reasonable terms and conditions to all applicants desiring to obtain such a license. The IEEE makes no representation as to the reasonableness of rates and/or terms and conditions of the license agreement offered by the patent holder. Contact information may be obtained from the IEEE Standards Department.

Authorization to photocopy portions of any individual standard for internal or personal use is granted by the Institute of Electrical and Electronics Engineers, Inc., provided that the appropriate fee is paid to Copyright Clearance Center. To arrange for payment of licensing fee, please contact Copyright Clearance Center, Customer Service, 222 Rosewood Drive, Danvers, MA 01923 USA; (978) 750-8400. Permission to photocopy portions of any individual standard for educational classroom use can also be obtained through the Copyright Clearance Center.

Copyright The Institute of Electrical and Electronics Engineers, Inc.
Provided by IHS under license with IEEE
No reproduction or networking permitted without license from IHS
Not for Resale

Introduction

(This introduction is not part of IEEE Std 1390.2-1999, IEEE Standard for Automatic Meter Reading Via Telephone—Network to Telemetry Interface Unit.)

This standard was prepared by the TIU-Communications Interface Subcommittee, which is a technical subcommittee of the IEEE Standards Coordinating Committee 31 on Automatic Meter Reading and Energy Management. The members of the subcommittee that prepared this standard consisted of the following people:

Howard A. Scott, *Chair*

Paul Aubin	Fred Gould	Diane Palmer
Dennis Burman	Paul Hargaden	Matt Pierson
Larry Carmichael	Dana Holmes	William F. Rush
Bernard Courville	Alan Lowell	Jerome W. Schull
Gary Edwards	Wade Malcolm	Douglas Stewart
Donald Fisher	Mark Malmendier	Dan Sugarman
Stuart Garland	David Modisette	J. Mike Surratt
Mike Gilbert	John E. Newbury	Richard Tucker
Greg Gomez	Dan Nordell	Ted York

The The following members of the balloting committee voted on this standard:

Michael Anderson	Stuart Garland	Daniel E. Nordell
Paul Aubin	David Gestler	William F. Rush
Don Beets	Bruce Gray	Jerome W. Schull
Andrew Brock	Paul Hargaden	Howard Scott
William Buckley	Lawrence Kotewa	Tushar Shah
	Vuong Nguyen	

When the IEEE-SA Standards Board approved this standard on 2 July 1999, it had the following membership:

Richard J. Holleman, *Chair* **Donald N. Heirman,** *Vice Chair*

Judith Gorman, *Secretary*

Satish K. Aggarwal	James H. Gurney	Louis-François Pau
Dennis Bodson	Lowell G. Johnson	Ronald C. Petersen
Mark D. Bowman	Robert J. Kennelly	Gerald H. Peterson
James T. Carlo	E. G. “Al” Kiener	John B. Posey
Gary R. Engmann	Joseph L. Koepfinger*	Gary S. Robinson
Harold E. Epstein	L. Bruce McClung	Akio Tojo
Jay Forster*	Daleep C. Mohla	Hans E. Weinrich
Ruben D. Garzon	Robert F. Munzner	Donald W. Zipse

*Member Emeritus

Also included is the following nonvoting IEEE-SA Standards Board liaison:

Robert E. Hebner

Greg Kohn
IEEE Standards Project Editor

Copyright © 1999 IEEE. All rights reserved.

Copyright The Institute of Electrical and Electronics Engineers, Inc.
Provided by IHS under license with IEEE
No reproduction or networking permitted without license from IHS
Not for Resale

Contents

1. Overview 1

1.1 Scope 1
1.2 Purpose 1

2. References 1

3. Definitions, abbreviations, and acronyms 2

3.1 Definitions 2
3.2 Abbreviations and acronyms 5

4. UTS description 5

4.1 Feature description 5
4.2 Telephone network access methods 7
4.3 Call initiation by utility or ESP 7
4.4 Call initiated by the TIU 7
4.5 TIU transmission methods 7
4.6 Telephone network technical requirements 8

5. TIU functional requirements 8

5.1 Module description 8
5.2 Functional requirements of the TIU 11
5.3 Operating states 13

6. TIU network description 15

6.1 End user wiring configuration 15
6.2 TIU transmission methods 16

7. Network interface—Physical 17

7.1 Tip-ring electrical characteristics 17
7.2 Ringer equivalence number (REN) 17
7.3 TIUs per line 17
7.4 Tamper detection 17
7.5 Maintenance and diagnostics 17

8. Telephone network alerting 17

8.1 Alert tones 18
8.2 Power ringing 20
8.3 Subaddressing 20

9. Telephone network call origination 21

10. Telephone network interface—Transmission 21

10.1 Modem type and speed or DTMF 22

Copyright © 1999 IEEE. All rights reserved.
Copyright The Institute of Electrical and Electronics Engineers, Inc.
Provided by IHS under license with IEEE
No reproduction or networking permitted without license from IHS
Not for Resale

11. Telephone network—Protocol 22

11.1 Security and encryption 22

12. Calls initiated by the utility or ESP (outbound—TIU off-hook transmission method) 23

12.1 COSU access method (Figure 11) 23
12.2 Direct dial access method (Figure 13) 25

13. Calls initiated by the TIU (inbound—TIU off-hook transmission method) 27

13.1 COSU access method (Figure 14 and Figure 15) 27
13.2 Direct dial access method (Figure 16) 29

14. Calls initiated by the utility or ESP (outbound—TIU on-hook transmission method) 31

14.1 COSU access method (Figure 17) 31

Annex A (informative) Bibliography 34

--`,,`-`-`,,`,,`,`,,`---
Copyright © 1999 IEEE. All rights reserved.

Copyright The Institute of Electrical and Electronics Engineers, Inc.
Provided by IHS under license with IEEE
No reproduction or networking permitted without license from IHS
Not for Resale

This page is intentionally blank.

and Electronics Engineers, Inc.
IEEE
itted without license from IHS
Not for Resale

IEEE Standard for Automatic Meter Reading Via Telephone—Network to Telemetry Interface Unit

1. Overview

1.1 Scope

This standard describes the telephone network interface to a telemetry interface unit (TIU) operating under the utility telemetry service (UTS) architecture. The UTS basic transport architecture is capable of supporting many different applications. Telemetry calls may be initiated from either the utility/enhanced service provider (ESP) or the TIU on the end user's premise. There are two access methods defined for this service [central office service unit (COSU) access method and direct dial access method]. There are two TIU transmission methods defined for this service (off-hook transmission method and on-hook transmission method). The interface covered in this standard is described in terms of a basic utility meter reading/controlling service. However, any number of other applications can be delivered using the telemetry transport service.

1.2 Purpose

The purpose of this standard is to provide a generic interface to a TIU that will be supported by the architecture of the UTS. The architecture will provide utilities a facility that is readily available, has short set up times, and allows for automatic meter reading using the capabilities of the switched telephone network. The architecture and interface will support a multitude of different transport applications for other industries.

2. References

This standard shall be used in conjunction with the following publications. When the following standards are superseded by an approved revision, the revision shall apply.

ANSI T1401-1993, American National Standard for Telecommunications—Interface Between Carriers and Customer Installations—Analog Voicegrade Switched Access Lines Using Loop-Start and Ground-Start Signaling.[1]

--`,-`-`,,`,,`,`,,`---

Copyright © 1999 IEEE. All rights reserved.

Copyright The Institute of Electrical and Electronics Engineers, Inc.
Provided by IHS under license with IEEE
No reproduction or networking permitted without license from IHS
Not for Resale

Canadian Department of Communications CS-03: 1998, Terminal Equipment, Terminal Systems, Network Protection Devices, Connection Arrangements, and Hearing Aids Compatibility.[2]

Federal Communications Commission Rules and Regulations, Title 47, Part 68, Connection of Terminal Equipment to the Telephone Network.[3]

IEEE Std 820-1984 (Reaff 1992), IEEE Standard Telephone Loop Performance Characteristics.[4]

IEEE Std 1390-1995, IEEE Standard for Utility Telemetry Service Architecture for Switched Telephone Network.

IEEE Std 1390.3-1998, IEEE Standard for Automatic Meter Reading Via Telephone Network—Network to Utility Controller.

3. Definitions, abbreviations, and acronyms

3.1 Definitions

Terms used in this document are defined with respect to the architecture and interfaces of a basic utility telemetry service. IEEE Std 100-1996, The IEEE Standard Dictionary for Electrical and Electronics Terms, Sixth Edition, should be referenced for terms not defined in this clause.

3.1.1 abbreviated ringing: A short, variable burst of power ringing that is required to establish a temporary communications path in certain types of network pair-gain equipment. The switch is instructed, via trunk signals, to output this abbreviated ringing on the end users line.

3.1.2 alert tone: A non-power ringing tone, or combination of tones, used to request the telemetry interface unit (TIU) or customer premise equipment (CPE) to become active.

3.1.3 alert tone code: A data byte, from the utility controller, that identifies which alert tone is to be used by the central office service unit (COSU).

3.1.4 automatic call distribution (ACD): A service that evenly distributes calls among incoming end user lines.

3.1.5 automatic number identification (ANI): The local access and transport area (LATA) or interLATA billing number of the calling party.

3.1.6 call-type information (CTI) digits: Sent to the switch from the central office service unit (COSU) via signaling on the utility telemetry trunk, per call, which specify the customer premise equipment (CPE) transmission interface (i.e., on-hook or off-hook operation). These information digits are assigned, on a trunk group basis, through the switch administration procedures.

---

[1]ANSI publications are available from the Sales Department, American National Standards Institute, 11 West 42nd Street, 13th Floor, New York, NY 10036, USA (http://www.ansi.org/).

[2]This document is available from Global Engineering Documents, 15 Inverness Way East, Englewood, Colorado 80112-5704, USA (http://www.global.ihs.com/).

[3]FCC documents are available from the Federal Communications Commission, 445 12th Street S.W., Washington, D. C., 20554, USA. Title 47 is freely available via the web at http://www.fcc.gov/wtb/rules.html.

[4]IEEE publications are available from the Institute of Electrical and Electronics Engineers, 445 Hoes Lane, P.O. Box 1331, Piscataway, NJ 08855-1331, USA (http://www.standards.ieee.org/).

Copyright © 1999 IEEE. All rights reserved.
Copyright The Institute of Electrical and Electronics Engineers, Inc.
Provided by IHS under license with IEEE
No reproduction or networking permitted without license from IHS
Not for Resale

3.1.7 central office service unit (COSU): A telephone company controller resident in a central office that connects to the utility controller and, via the utility telemetry trunk, to the switch. The COSU provides the function of originating and terminating calls to and from telemetry interface units (TIUs). For the COSU access method, the COSU performs a security check with the utility controller and places a call to the end user in response to the information sent to it by the utility controller. The COSU performs a security check and initiates a connection to the utility controller when called by the TIU. The COSU also provides a multiplexing interface between the utility controller and COSU and the COSU and TIU(s). The COSU may also provide traffic measurements.

3.1.8 central office service unit (COSU) access method: Utilizes the switched telephone network, comprised of a COSU, switch, and other network elements. This combination provides for automatically invoking/ignoring certain switch based telemetry communications capabilities and establishes a communications path between a utility/enhanced service provider (ESP) and a telemetry interface unit (TIU).

3.1.9 customer premise equipment (CPE): Equipment located on the customer's premises that is connected to the telephone line [e.g., telemetry interface units (TIUs), telephones, answering machines, and modems].

3.1.10 customer premise equipment (CPE) active state: The CPE has been alerted and performing a communication function.

3.1.11 customer premise equipment (CPE) inactive state: The CPE has completed its communication function.

3.1.12 cut-through: A transmission path through the switched telephone network to an end user.

3.1.13 digital loop carrier (DLC): Equipment that increases the number of end users served by existing loopside pairs through the use of digital multiplexing. These concentration systems are often called pair-gain devices. Both universal and integrated DLCs may be used.

3.1.14 direct dial access method: Utilizes the switched telephone network, comprised of a switch and other network elements that establish a communication path between a utility/enhanced service provider (ESP) and a telemetry interface unit (TIU).

3.1.15 enhanced service provider (ESP): A service provider offering services through the telephone network using the telemetry transport capabilities to deliver their services.

3.1.16 in-band tones: Typically, a signal on the communication path in the range of 400–3300 Hz.

3.1.17 inbound telemetry: Communication initiated by a telemetry interface unit (TIU) toward a utility or enhanced service provider (ESP).

3.1.18 independent telephone company: A company not associated with a regional Bell operating company (non-Bell operating company).

3.1.19 local access and transport area (LATA): An area typically served by a regional Bell operating company (RBOC).

3.1.20 local loop: The communication path between the telephone company's switching office and the end user.

3.1.21 loop current feed open (LCFO): A Bellcore-defined, switch generated, fixed open (no voltage) on the line within the range of 150–350 ms as sent by the switch. Its purpose is to signal certain digital loop carrier (DLC) devices to assign a time slot (transmission path) for a 15 s interval.

Copyright © 1999 IEEE. All rights reserved.

Copyright The Institute of Electrical and Electronics Engineers, Inc.
Provided by IHS under license with IEEE
No reproduction or networking permitted without license from IHS Not for Resale

3.1.22 modified calling line disconnect: A telephone network feature that, if the end user is off-hook, requires the end user's line to go on-hook before receiving dial tone from the telephone network.

3.1.23 multi-line hunt group (MLHG): A group of lines that have a fixed alternate routing should one or more of the lines in the group be busy.

3.1.24 network interface (demarcation point): The point of connection between the local loop and the end user's (customer's) wiring.

3.1.25 no-test trunk: A specialized switch facility used for operator and service personnel metallic testing of a subscriber's telephone lines (also known as a test trunk facility).

3.1.26 on-hook/off-hook: Signaling conditions on a line in the form of dc impedance presented to the local loop by the telemetry interface unit (TIU). Off-hook implies that the TIU is in a low resistance state and is allowing significant current to flow. On-hook implies that the TIU is in a high resistance state and is not allowing significant current to flow. See ANSI T1401-1993 and the local access and switching area (LATA) Switching Systems Generic Requirements (LSSGR), Section 6.2.2, Bell Communications Research (Bellcore) for more detail.

3.1.27 outbound telemetry: Communication initiated by a utility or enhanced service provider (ESP) toward a telemetry interface unit (TIU).

3.1.28 polarity guard: A device that guarantees proper tip and ring polarity.

3.1.29 post disconnect timing: A timing interval (normally about 12 s in length), initiated when the called party goes on-hook, in which the established connection remains in place as long as the calling party continues to remain off-hook.

3.1.30 regional Bell operating company (RBOC): A regional telephone company that may or may not be made up of individual operating companies.

3.1.31 technical advisory (TA): A telephone company publication intended to disclose information and request comments regarding network services.

3.1.32 technical requirements (TR): A telephone company publication intended to disclose information and operation regarding network services.

3.1.33 telemetry interface unit (TIU): A customer premise equipment (CPE) device that provides a network gateway function and an interface to one or more meters (water, gas, and electric) or other telemetry/control devices or to a local area network. The TIU may be placed in series with or bridged onto the local loop assigned to the end user. Because the TIUs are not network elements, but CPE, they are connected to the end user's line (tip/ring) of the local loop at the network interface. In existing systems, these units are also known as meter interface units (MIUs).

3.1.34 utility controller (UC): A controller resident on a utility/enhanced service provider (ESP) premises, that connects, via the telephone network, to the telemetry interface unit (TIU) (using the direct dial network access method), to the central office service unit (COSU) (using the COSU network access method or the no-test trunk network access method).

3.1.35 utility telemetry trunk (UTT): A two-way telephone company facility connecting the central office service unit (COSU) to the switch. This facility allows a utility or enhanced service provider (ESP), via the telephone network (COSU), to automatically invoke/ignore certain telephone network capabilities as well as provide suppressed or abbreviated ringing access to a telemetry interface unit(s) [TIU(s)] on an end user's line. The TIU may also originate calls, through the telephone network (COSU and switch), which will

Copyright © 1999 IEEE. All rights reserved.
Copyright The Institute of Electrical and Electronics Engineers, Inc.
Provided by IHS under license with IEEE
No reproduction or networking permitted without license from IHS
Not for Resale

automatically invoke/ignore certain telephone network capabilities and provide a connection to the utility or ESP.

3.1.36 wink: A momentary off-hook condition in telephone trunk signaling. A wink may have different meanings depending on where it is used in the signaling stream (i.e., start or connect).

3.2 Abbreviations and acronyms

AMR	automatic meter reading
ACD	automatic call distribution
COSU	central office service unit
CPE	customer premise equipment
DLC	digital loop carrier
DTMF	dual-tone multiple frequency
ESP	enhanced service provider
LATA	local access and transport area
LSSGR	LATA Switching Systems Generic Requirements
MIU	meter interface units
MLHG	multiline hunt group
RBOC	regional Bell operating company
TIU	telemetry interface unit
UTS	utility telemetry service
UTT	utility telemetry trunk

4. UTS description

4.1 Feature description

This analog feature allows for the transport of data between a utility or an ESP and an end user's TIU or other CPE device attached to the telephone line. Communication may be established by the utility/ESP or TIU. Communication connections from the utility/ESP to the telephone network shall utilize the switched network, private networks, packet networks, or telephone company gateways with combinations of networks set up for efficient communication. Figure 1 illustrates the functional elements of the UTS.

Automatic meter reading (AMR) is used to describe this utility telemetry service (UTS). AMR is the most popular use for the UTS feature today. There are, however, other applications which will take advantage of a suppressed ringing end user access or a CPE device that initiates calls from the end user's premise. An example of utility-initiated (outbound) applications could include control of remote devices (i.e., resource shut-off), ESP-initiated messaging (i.e., voice-mail message waiting notification), or ESP-initiated appliance diagnosis. Examples of TIU-initiated (inbound) calling devices are end user security systems, end user medical alert systems, utility load control systems, and smart appliances. Smart appliances may initiate calls to service bureaus based on internal maintenance routines or to provide usage-sensitive billing. Calls to the utility/ESP may also be connected to telephone-company-provided multiline hunt groups (MHGs) or automatic call distribution (ACD) services for more efficient communication capability.

Copyright © 1999 IEEE. All rights reserved.

Copyright The Institute of Electrical and Electronics Engineers, Inc.
Provided by IHS under license with IEEE
No reproduction or networking permitted without license from IHS Not for Resale

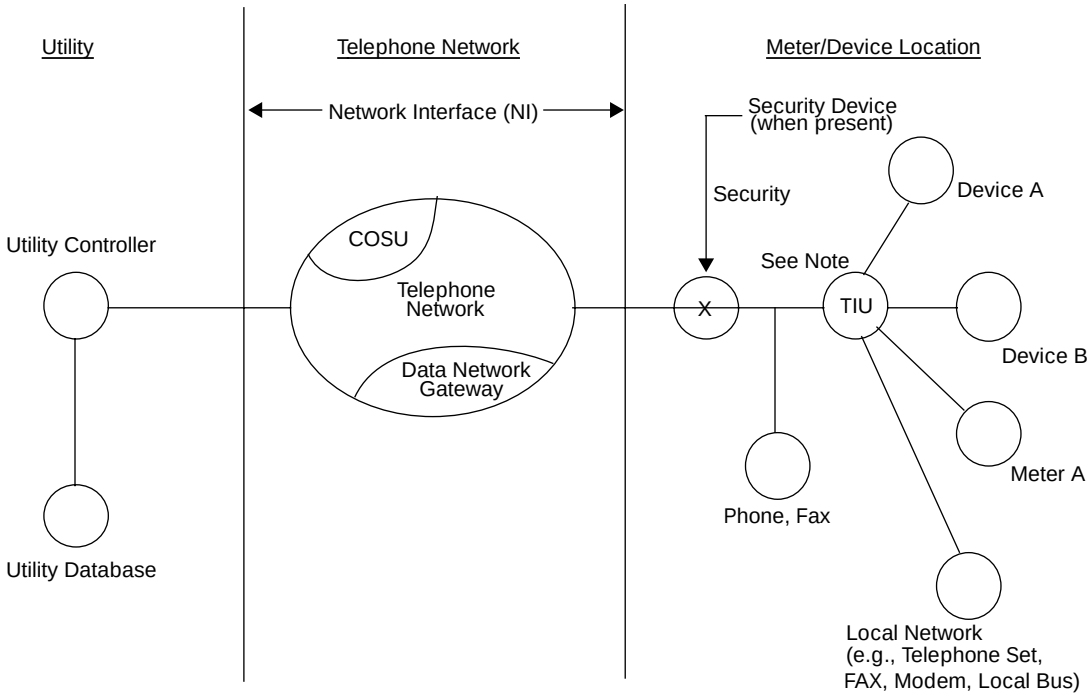

NOTE—In some cases the TIU may reside on the network side of the network interface,

Figure 1—UTS architecture for telephone network communications

The telephone end user whose line is being used for UTS is typically not alerted (i.e., by an audible signal) that a utility telemetry call is in process. Also, calling priority is always given to the end user (except for security devices, as described in other sections). When the utility or ESP calls the TIU using the COSU access method, the end user's line is alerted by a signal that does not operate the end user's CPE ringer. The direct dial access method will cause the end user's ringer to be operated. Additionally, the TIU must go on-hook (off-hook transmission method) or go to the idle state (on-hook transmission method) if the end user goes off-hook (except for security devices, as described in other sections). The end user will only become aware of the utility/ESP call if dialing or data transmission is heard or a delayed dial tone is detected.

Various components and protocols of the UTS are the subject of IEEE Std 1390-1995,[5] IEEE P1390.1/AMR.5/99-001, 3 February 1999 [B4], and IEEE Std 1390.3-1998.

Multiple TIUs, as well as other end-user CPE devices, may be present on a single end user's line. Each TIU may access one or more ports that are connected to the devices requiring communication capability.

To completely describe the progress of the telemetry call and the differences between the identified network access methods, it is important to describe certain internal telephone network operations. These internal telephone network operations are controlled by the local telephone company and are fully defined in the local telephone company technical documents.

[5]Information on references can be found in Clause 2.

Copyright © 1999 IEEE. All rights reserved.
Copyright The Institute of Electrical and Electronics Engineers, Inc.
Provided by IHS under license with IEEE
No reproduction or networking permitted without license from IHS
Not for Resale

4.2 Telephone network access methods

The COSU access method and direct dial access method shall coexist with each other, and one TIU may implement both access methods.

4.2.1 COSU access method

When the COSU access method is utilized, the call shall be handled by the COSU-switch combination, which allows for automatic invoking/ignoring of certain switch based communication capabilities. For example, this access method will provide a connection to a line that has a valid directory number but connection has been denied because of vacation service or financial reasons. These communication capabilities are covered by the technical documents issued by a regional Bell operating company (RBOC) or an independent telephone company.

4.2.2 Direct dial access method

When the direct dial access method is utilized, the call shall proceed through the existing switched network, activating those communication capabilities that can be activated by the end user. Network features assigned to the line may affect the call. For example, the TIU may activate/deactivate selected telephone network (switch) features assigned to the end user's line, as an end user would, with a sequence of dialed digits for each feature. These communication capabilities are covered by the technical documents issued by an RBOC or an independent telephone company.

4.3 Call initiation by utility or ESP

4.3.1 Using the COSU access method

A suppressed ringing connection shall be established, allowing cut-through to the end user's line and allowing communication with the TIU. The TIU shall be alerted by an alert tone(s) and subaddresses, if present. Data is exchanged in either direction. When the data exchange is completed, the telephone network (COSU) causes the telephone network (switch) to disconnect from the end user's line.

4.3.2 Using the direct dial access method

Several defacto techniques have been implemented to cause the TIU to become active and either answer the call or dial back to the utility/ESP.

4.4 Call initiated by the TIU

The TIU initiates a call by going off-hook and dialing a preprogrammed series of digits. With either the COSU access method or the direct dial access method, the call shall be connected, via the telephone network, to the utility or ESP. Data is exchanged in either direction and the call is disconnected.

4.5 TIU transmission methods

4.5.1 Off-hook transmission method

When the off-hook transmission method is utilized and the TIU is alerted or wakes up and becomes active, the TIU goes off-hook, causing a bidirectional communication path to be established through loopside elements and the switch. While the TIU is communicating, the TIU is off-hook. During the communication, the switch cannot detect multiple off-hook signals from the end user's line (the TIU is already off-hook).

Copyright © 1999 IEEE. All rights reserved.

Copyright The Institute of Electrical and Electronics Engineers, Inc.
Provided by IHS under license with IEEE
No reproduction or networking permitted without license from IHS Not for Resale

Should the end user go off-hook during a telemetry call, the TIU or telephone network (COSU) shall detect the end user's off-hook condition and cause action to disconnect the utility call.

4.5.2 On-hook transmission method

When the on-hook transmission method is utilized and the TIU is alerted or wakes up, the TIU remains on-hook and becomes active. The telephone network assumes a bidirectional communication path to be established through selected loopside elements and the switch. While the TIU is communicating, the TIU is on-hook. Should the end user go off-hook during a telemetry call, the telephone network (switch) will detect the end user's off-hook signal and cause action to disconnect the utility call. The telephone network (switch) is able to detect this off-hook signal since there are no other TIUs (or other CPE devices) in an off-hook state on the end user's line.

4.6 Telephone network technical requirements

There are no Bellcore technical advisories or technical requirements on this subject.

The RBOC technical advisory/technical requirement documents are listed in Table 1.

Table 1—Technical Advisory/Technical Requirements documents

Company	No-test trunk no.	UTS no.
Bell South	TR 73547	TA 73565
Bell Atlantic	TR 72015	—
Ameritech	TR MKT 000035	AMTA-TMO-000098
NYNEX	NTR-74310	—
Southwestern Bell	Draft dated 12/90	—
U.S. West	77328	—

5. TIU functional requirements

5.1 Module description

The TIU is a CPE device that, on one side, connects to the telephone network and, on the other side, connects to a meter to be read or a device to be controlled. Multiple TIUs may be connected to an end user's line. Each TIU may support multiple meters or devices, may be integrated into a meter/device, or may be integrated into a gateway device. The TIU may be wired in series or parallel with the end user's CPE as shown in Figure 2 and Figure 3.

The functional modules within the TIU are identified in Figure 4 and Figure 5.

This standard covers the TIU interface to the telephone network. The TIU and the TIU/meter-device interface will be the subject of IEEE Std 1390-1995, IEEE P1390.1/AMR.5/99-001, 3 February 1999 [B4], and IEEE Std 1390.3-1998, as well as several future standards.

Existing TIUs, called meter interface units, may continue to be used, and may coexist with, the UTS.

Although the TIU is described in terms of a CPE device, in certain applications the TIU may reside on the network side of the customer interface. Almost all of the requirements stated in this document would apply to devices on the network side of the customer interface. When residing on the network side of the customer interface, telephone company technical advisory/technical reuqirements documents would specify the complete requirements.

Copyright © 1999 IEEE. All rights reserved.
Copyright The Institute of Electrical and Electronics Engineers, Inc.
Provided by IHS under license with IEEE
No reproduction or networking permitted without license from IHS
Not for Resale

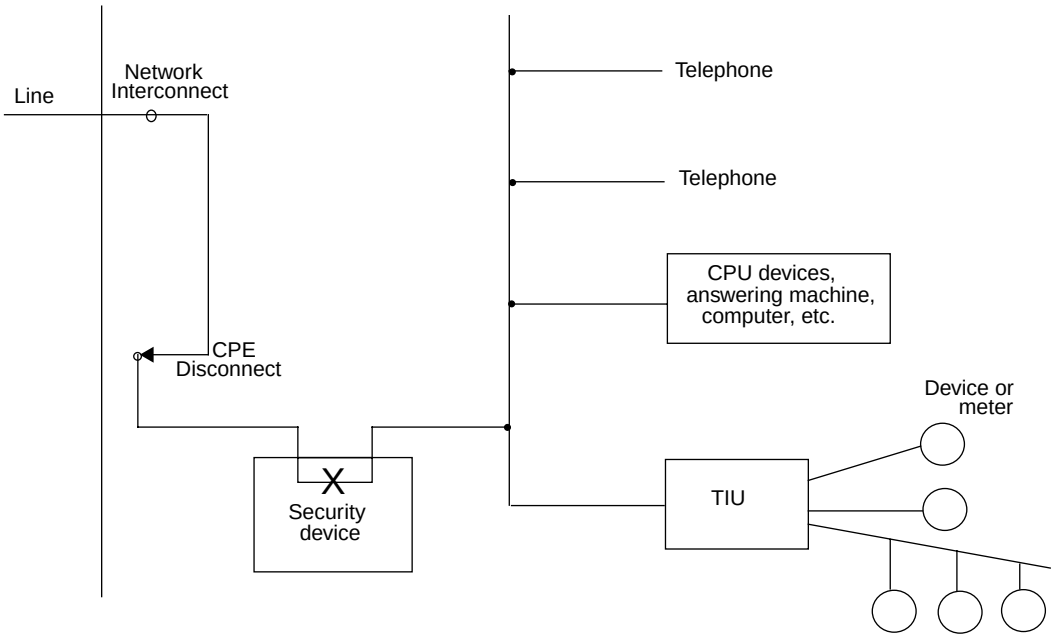

Figure 2—Network to TIU end user wiring configuration, TIU parallel wiring

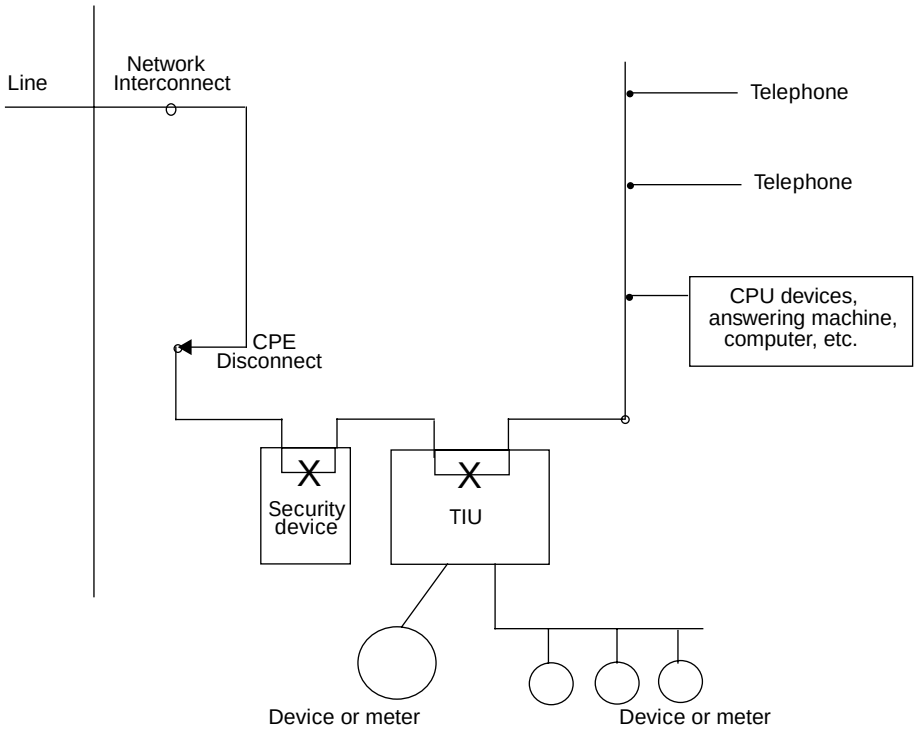

Figure 3—Network to TIU end user wiring configuration TIU series wiring

Copyright © 1999 IEEE. All rights reserved.

Copyright The Institute of Electrical and Electronics Engineers, Inc.
Provided by IHS under license with IEEE
No reproduction or networking permitted without license from IHS
Not for Resale

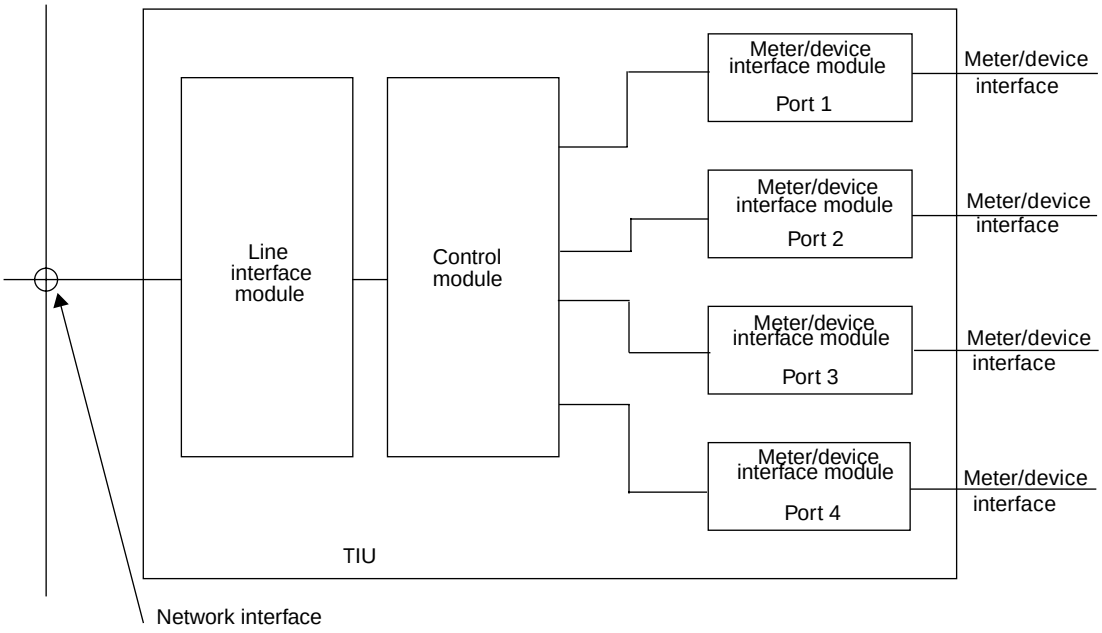

Figure 4—TIU function modules parallel wiring

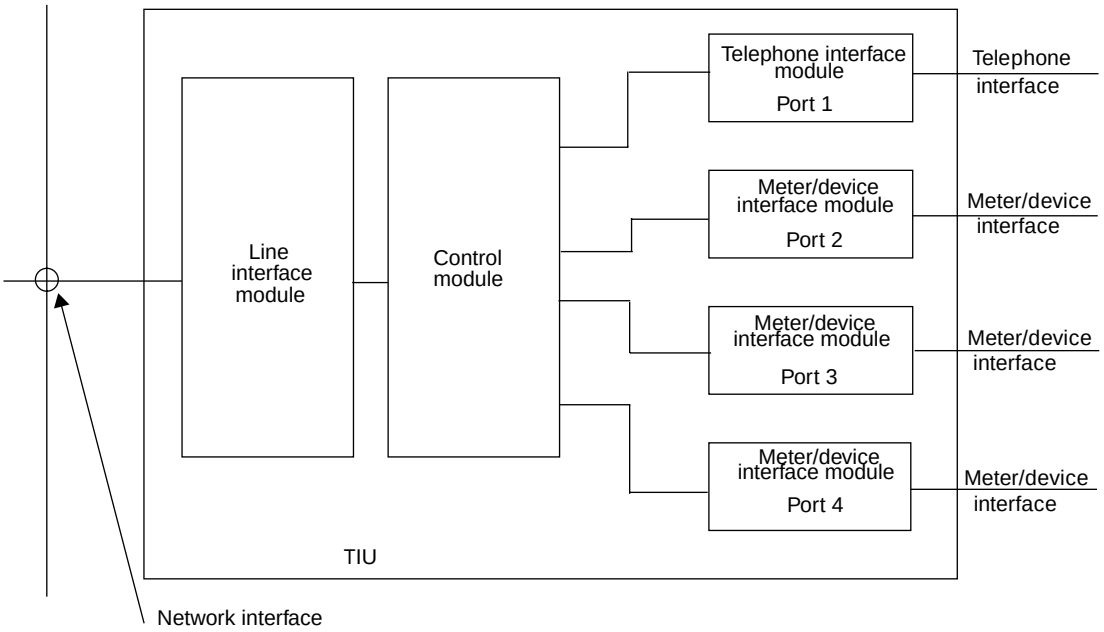

Figure 5—TIU functional modules series wiring

Copyright © 1999 IEEE. All rights reserved.
Copyright The Institute of Electrical and Electronics Engineers, Inc.
Provided by IHS under license with IEEE
No reproduction or networking permitted without license from IHS
Not for Resale

5.2 Functional requirements of the TIU

5.2.1 General

The TIU shall conform to all U.S. Federal Communications Commission (FCC) regulations or Canadian Department of Communications (CDOC) regulations that are appropriate for this type of device.

The TIU shall conform to the regulations of the operating companies serving the end user's line.

5.2.2 Physical

The TIU is bridged onto, or placed in series with, the tip and ring of the end user's line. Other CPE can be bridged onto the end user's line with the TIU.

TIUs, when available for two-, four-, and eight-party line service, shall have the correct tip, ring, and ground connections.

TIU failure shall not prevent an end user from initiating a call.

Depending on the TIU power requirements, local powering may be required. If the TIU is locally powered, additional regulations may apply.

TIUs shall have a polarity guard.

The TIU shall draw sufficient current to provide for proper loopside operation.

With the off-hook transmission method, the TIU or the COSU shall detect when the end user goes off-hook, causing the telemetry call to be taken down. The end user shall be given priority over the utility telemetry call.

With the on-hook transmission method, the telephone network (switch) shall detect when the end user goes off-hook, causing the telemetry call to be taken down. The end user shall be given priority over the utility telemetry call.

5.2.3 Link

With the COSU access method, when tone alerted (including subaddresses, if present), the TIU shall become active within the shortest alert tone duration possible, with a 600 ms or less duration as a recommended goal and a 1000 ms duration as a maximum. This duration includes the subaddress, if present.

With the direct dial access method, the telephone network (switch) will supply power ringing to the TIU.

With the off-hook transmission method, the TIU is alerted (outbound), wakes up, goes off-hook, and becomes active. The COSU access method alerts the TIU with an in-band alerting tone(s) and/or frequency shift keying (FSK) signals. The direct dial access method alerts the TIU with power ringing. False alerts shall be prevented [i.e., harmonics, voice, or dual-tone multiple frequency (DTMF)].

With the on-hook transmission method, the TIU is alerted (outbound), wakes up, remains on-hook, and becomes active. The COSU access method alerts the TIU with an in-band alerting tone(s) and/or FSK signals. False alerts shall be prevented (i.e., harmonics, voice, or DTMF).

The TIU may initiate communication by going off-hook and becoming active and dialing digits.

Copyright © 1999 IEEE. All rights reserved.

Copyright The Institute of Electrical and Electronics Engineers, Inc.
Provided by IHS under license with IEEE
No reproduction or networking permitted without license from IHS Not for Resale

Both off-hook and on-hook transmission methods are covered in IEEE Std 1390-1995, IEEE P1390.1/AMR.5/99-001, 3 February 1999 [B4], and IEEE Std 1390.3-1998.

The telephone network (switch)-TIU protocol interworkings are defined in IEEE Std 1390-1995 and IEEE P1390.1/AMR.5/99-001, 3 February 1999 [B4], telephone company technical requirements, and other specifications.

The telephone network (switch) shall enforce the maximum TIU/COSU connect time as defined by the telephone company service provider.

With the off-hook transmission method, the TIU shall go on-hook and become inactive

— By its own initiation (end of data, sensing end user off-hook, error recovery, etc.).
— In a maximum of 600 ms after the start of a disconnect signal from the telephone network (switch).
— By a loss of carrier.
— By a disconnect signal in the data stream.

At the end of the 800 ms disconnect signal, the telephone network (switch) will look for an off-hook signal from the end user's line. If an off-hook signal exists, the telephone network (switch) will deliver dial tone to the end users line.

With the on-hook transmission method, the TIU shall become inactive

— By its own initiation (end of data, sensing end user off-hook, error recovery, etc.).
— In a maximum of 600 ms after the start of a disconnect signal from the telephone network (switch).
— By a loss of carrier.
— By a disconnect signal in the data stream.

At the end of the 800 ms disconnect signal, the telephone network (switch) shall look for an off-hook signal from the end user's line. If an off-hook signal exists, the telephone network (switch) shall deliver dial tone to the end user's line.

When a telemetry call is initiated by the utility/ESP using the COSU access method, the TIU must go off-hook (after alerting) prior to the expected expiration of the DLC time slot allocation when concentrated universal DLC equipment is part of the local loop; otherwise, the communication channel will be lost.

5.2.4 Application

The signals and data transfer protocol to or from the TIU should have no effect on other CPE bridged onto the end user's line. Examples of such equipment are

a) Answering machines
b) Computers (modems)
c) Security equipment
d) Caller identification (ID) equipment

The TIU will transmit to or from the telephone network using standard data communication techniques. The switch will be transparent to this data.

With the off-hook transmission method, the TIU shall automatically go on-hook and disconnect (become inactive) when it has completed the telemetry data transfer.

Copyright © 1999 IEEE. All rights reserved.
Copyright The Institute of Electrical and Electronics Engineers, Inc.
Provided by IHS under license with IEEE
No reproduction or networking permitted without license from IHS
Not for Resale

With the on-hook transmission method, the TIU shall automatically disconnect (become inactive) when it has completed the telemetry data transfer.

There are four UTS disconnect scenarios described in IEEE Std 1390-1995. The first is a call disconnect where the telephone network (COSU) initiates an on-hook to the telephone network (switch). The telephone network (COSU) initiates this on-hook signal based on its own internal information or a signal from the utility controller. The second is when the telephone network (switch) determines that a call must be disconnected. The third is when the end user goes off-hook. The fourth is when the TIU goes on-hook (using the off-hook transmission method) and there are no other off-hook signals present on the line. The utility controller requirements are described in IEEE Std 1390-1995, IEEE P1390.1/AMR.5/99-001, 3 February 1999 [B4], and IEEE Std 1390.3-1998.

With the off-hook transmission method, the TIU or telephone network (COSU) shall detect the end user going off-hook. The telephone network (COSU) goes on-hook to cause the telephone network (switch) to take down the call. The TIU promptly goes on-hook and becomes inactive to minimize dial tone delivery delay to the end user.

With the on-hook transmission method, the telephone network (switch) shall detect the end user going off-hook. The telephone network (switch) shall cause the call to be taken down. The TIU promptly becomes inactive.

Only one on-hook or off-hook transition (off-hook transmission method) or active/inactive transition (on-hook transmission method) is allowed per telemetry call. No immediate reseizure of the line is allowed.

Multiple TIUs are allowed on the same line. There must be installation coordination between the TIUs so that the alert destined for one TIU will not falsely alert another TIU.

A single TIU may be receptive to one or more alert tones and subaddresses, if present.

5.3 Operating states

5.3.1 TIU activation

To move from the inactive state to the active state (Figure 6), a telephone network alert or self wake-up is required. In response to the alert or self wake-up, the TIU will either go off-hook (using the off-hook transmission method) or remain on-hook (using the on-hook transmission method) when transitioning to the active state.

5.3.2 TIU deactivation

The TIU must move from the active state to the inactive state (Figure 7) when one or more of the following occur:

a) A network disconnect signal is received.
b) An end user off-hook is detected (off-hook transmission method).
c) A disconnect message is detected.
d) An internal disconnect is detected (end of data, error recovery, etc.).

In response to these occurrences, the TIU shall either go on-hook (using the off-hook transmission method) or remain on-hook (using the on-hook transmission method) when transitioning to the inactive state.

Copyright © 1999 IEEE. All rights reserved.

Copyright The Institute of Electrical and Electronics Engineers, Inc.
Provided by IHS under license with IEEE
No reproduction or networking permitted without license from IHS
Not for Resale

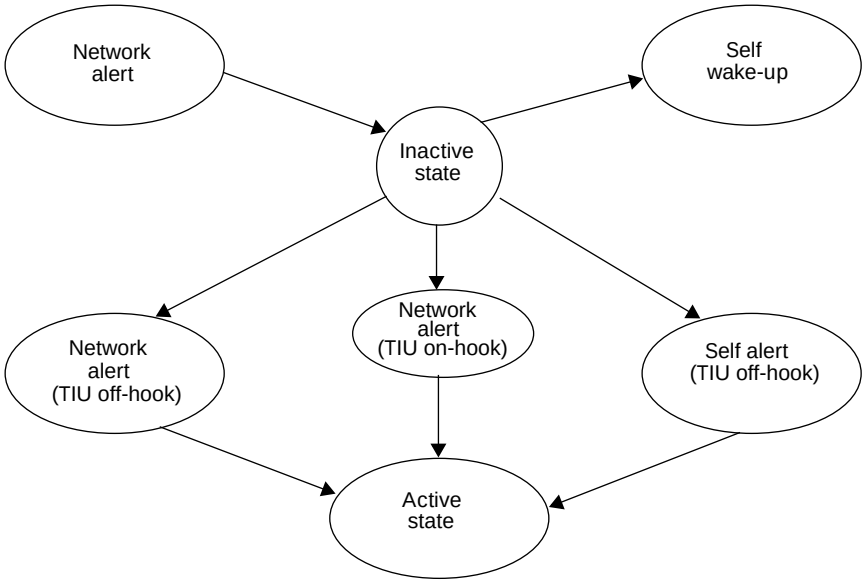

Figure 6—TIU operating states (network side) TIU activation

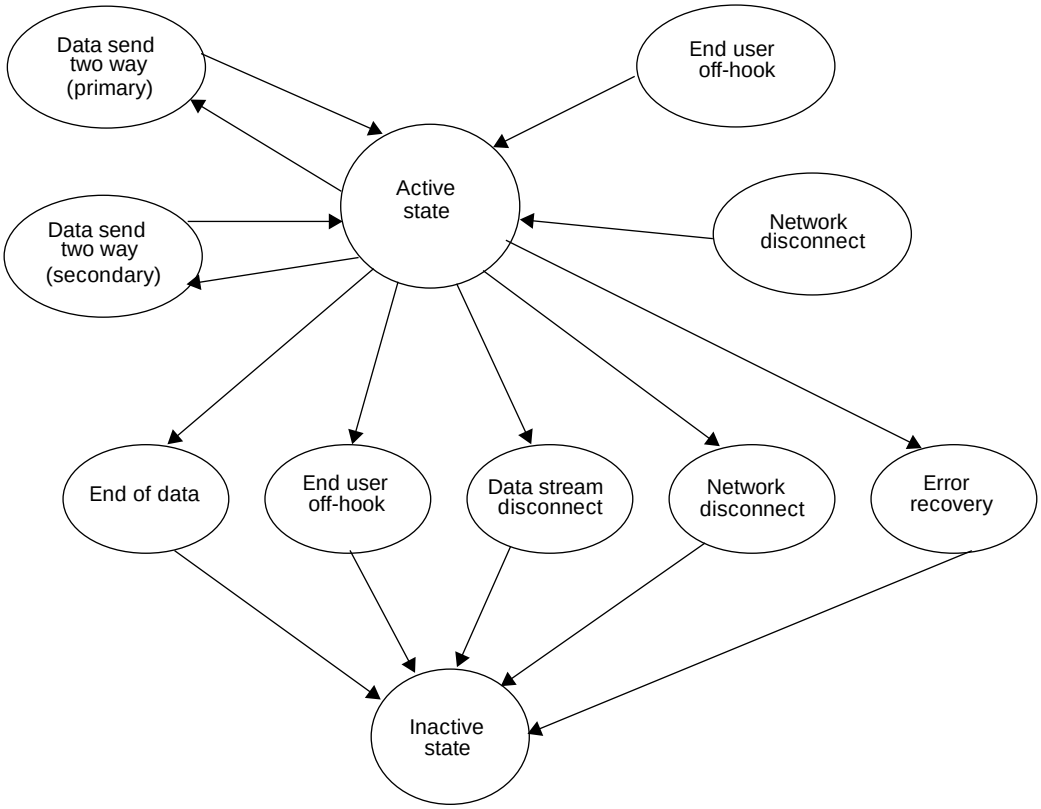

Figure 7—TIU operating states (network side) TIU deactivation

Copyright © 1999 IEEE. All rights reserved.
Copyright The Institute of Electrical and Electronics Engineers, Inc.
Provided by IHS under license with IEEE
No reproduction or networking permitted without license from IHS
Not for Resale

6. TIU network description

The TIU shall conform to the regulations of the operating companies serving the end user's line. Adequate protection is required in the TIU to prevent harm to the end user, associated equipment, the switch, and telecommunications equipment. The TIU shall conform to all FCC or CDOC regulations that are appropriate for this type of device. Standard harms requirements apply.

6.1 End user wiring configuration

There are two wiring configurations defined for the TIU-to-network interface. TIUs, when available for two-, four-, and eight-party service, must have the correct tip, ring, and ground connections. Both wiring configurations may exist in the same TIU.

6.1.1 TIU parallel wiring

In the parallel configuration, one or more TIU(s) are bridged onto (in parallel with) the tip/ring of the end user's line (see Figure 2). Other CPE can be bridged onto the end user's line with the TIU. Security devices, when present, are always wired so that they are closest to the network interface.

6.1.2 TIU series wiring

In the series configuration, the TIU is in series with other end user CPE devices (between the network interface and the end user's telephone) as shown in Figure 3. Security devices, when present, are always wired so that they are closest to the network interface.

6.1.3 Telephone network connectors

6.1.3.1 Hardwired connection

With this connector, the tip/ring wire leads are physically connected to the TIU terminals. The physical connection is designated as a screw type or insulation displacement type.

6.1.3.2 Modular connector—6 pin (RJ11 jack)

This connector is a standard non-keyed 6-pin modular connector commonly known as an RJ11 jack. The orientation and pinouts of the connector are shown in Figure 8.

A two-wire analog loop facility (line 1) will terminate on pins 3 and 4. A second two-wire analog loop facility, when present, will terminate on pins 2 and 5.

6.1.3.3 Modular connector—8 pin (RJ45 jack)

The connector is a standard non-keyed 8-pin modular connector commonly known as an RJ45 jack. The orientation and pinouts of the connector are shown in Figure 8.

A two-wire analog loop facility (line 1) will terminate on pins 4 and 5. A second two-wire analog loop facility (line 2), when present, will terminate on pins 3 and 6. When auxiliary power is delivered to the TIU through the modular connector, it will appear on pins 7 and 8.

Copyright © 1999 IEEE. All rights reserved.

Copyright The Institute of Electrical and Electronics Engineers, Inc.
Provided by IHS under license with IEEE
No reproduction or networking permitted without license from IHS
Not for Resale

6 pin (RJ11)

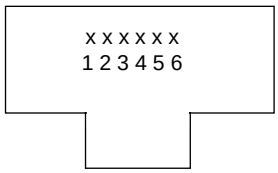

Pin number	Assignment
1	
2	Line 2
3	Line 1
4	Line 1
5	Line 2
6	

8 pin (RJ45)

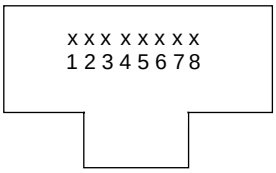

Pin number	Assignment
1	
2	
3	Line 2
4	Line 1
5	Line 1
6	Line 2
7	Local power (–)
8	Local power (+)

Figure 8—UTS modular connectors

6.2 TIU transmission methods

6.2.1 Off-hook transmission method

When the off-hook transmission method is utilized and the TIU is alerted or wakes up and becomes active, the TIU goes off-hook, causing a bidirectional communication path to be established through loopside elements and the switch. While the TIU is communicating, the TIU is off-hook. The switch cannot detect multiple off-hook signals from the end user's line (the TIU is already off-hook). Should the end user go off-hook during a telemetry call, the TIU or telephone network (COSU) shall detect the end user's off-hook condition and cause action to disconnect the utility call.

6.2.2 On-hook transmission method

When the on-hook transmission method is utilized and the TIU is alerted or wakes up, the TIU remains on-hook and becomes active. The telephone network assumes the communication path to be established though selected loopside elements and the switch. While the TIU is communicating, the TIU is on-hook. Should the end user go off-hook during a telemetry call, the telephone network (switch) shall detect the end user's off-hook signal and cause action to disconnect the utility call. The telephone network (switch) is able to detect this off-hook signal since there are no other TIUs (or other CPE devices) in an off-hook state on the end user's line.

Copyright © 1999 IEEE. All rights reserved.
Copyright The Institute of Electrical and Electronics Engineers, Inc.
Provided by IHS under license with IEEE
No reproduction or networking permitted without license from IHS
Not for Resale

7. Network interface—Physical

The TIU shall conform to the regulations of the operating companies serving the end user's line. Adequate protection is required in the TIU to prevent harm to the end user, associated equipment, the switch, and telecommunications equipment. The TIU must conform to FCC Rules and Regulations Title 47 (Part 68), or other FCC regulations that are appropriate for this type of device. Standard harms requirements apply. The TIU shall have a polarity guard.

Failure of the TIU shall not prevent an end user from placing or receiving a call.

7.1 Tip-ring electrical characteristics

The electrical characteristics of the telephone loop facility have been defined in numerous documents such as the LSSGR, IEEE Std 820-1984, and Canadian Department of Communications CS-03: 1998.

7.2 Ringer equivalence number (REN)

The normal telephone company REN limit of 5 shall apply to both CPE and TIUs connected to the line.

7.3 TIUs per line

There is no maximum number of TIUs per line specified.

7.4 Tamper detection

The TIU may provide a housing tamper detection circuit and/or a port tamper detection circuit.

7.5 Maintenance and diagnostics

Maintenance and diagnostics tests such as a self-test, a loop-back test, or a maintenance test with diagnostics are designated as future standards efforts.

8. Telephone network alerting

When using the COSU access method, the TIU is alerted by the telephone network using alerting tone(s), alerting tone(s) with subaddresses, power ringing, or power ringing with subaddresses.

When using the direct dial access method, several defacto techniques have been implemented to cause the TIU to become active and either answer the call or dial back to the utility/ESP.

Single alerting tones and dual alerting tones are specified in this standard. A single TIU may be alerted by one or more single- or dual-alert tones. When single-tone alerting is implemented, the subaddressing may be part of the tone-alert duration prior to the TIU becoming active, or contained in the data stream after the TIU becomes active. When dual-tone alerting is implemented, the subaddressing is part of the dual-tone alert duration. If the subaddress is transmitted during the alert duration, the TIU will go off-hook (using the off-hook transmission method) and become active only if that TIU contains the subaddress. If the subaddress is transmitted during the alert duration, the TIU will remain on-hook (using the on-hook transmission method) and become active only if that TIU contains the subaddress. False alerts shall be prevented (i.e., harmonics, voice, DTMF). When power-ring alerting is implemented, the subaddresses or port addressed is contained in

Copyright © 1999 IEEE. All rights reserved.

Copyright The Institute of Electrical and Electronics Engineers, Inc.
Provided by IHS under license with IEEE
No reproduction or networking permitted without license from IHS
Not for Resale

the data stream (after the TIU becomes active) or sent in the silent interval of the power ringing cycle (prior to the TIU becoming active).

8.1 Alert tones

8.1.1 Alert tone timing (Figure 9)

When using the off-hook transmission method, the telephone network will send out an alert tone for 600 ms or less (goal), 1000 ms maximum duration including the subaddress, when present (Figure 9). The TIU shall go off-hook and become active as a result of the alert tone and subaddress, if present. When the TIU goes off-hook during the tone-alert duration, the telephone network will terminate the alert tone. If the TIU does not go off-hook by the end of the tone-alert duration, the telephone network will take down the call.

When using the on-hook transmission method, the telephone network will send out an alert tone for 600 ms or less (goal), 1000 ms maximum duration including the subaddress, when present (Figure 9). The TIU shall remain on-hook and become active as a result of the alert tone and subaddress, if present. The telephone network shall terminate the alert tone at the end of the maximum alert-tone duration. The telephone network will assume that the TIU has become active at the end of the alert-tone duration.

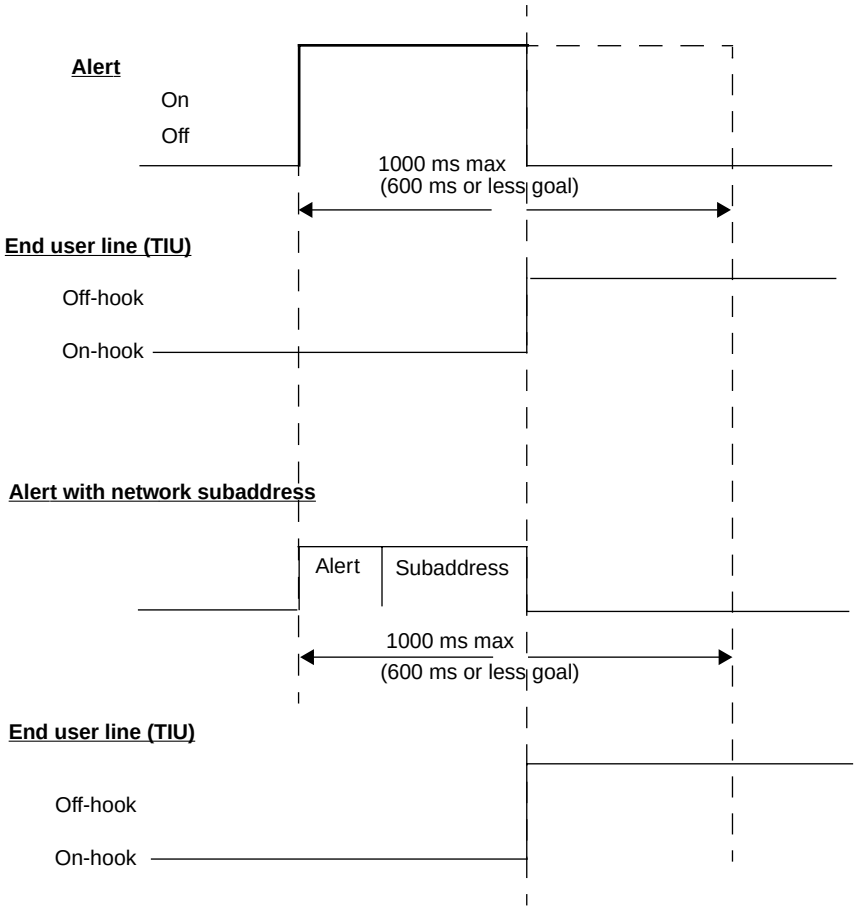

Figure 9—UTS call initiated by the utility direct dial access method (off-hook TIU)

Copyright © 1999 IEEE. All rights reserved.
Copyright The Institute of Electrical and Electronics Engineers, Inc.
Provided by IHS under license with IEEE
No reproduction or networking permitted without license from IHS
Not for Resale

8.1.2 Single-frequency tone alerts

When single-tone alerts are implemented, the alert tone frequency shall be selected from Table 2.

Table 2—Alert tone frequency for single-tone alerts

Single-tone alerts frequency (Hz) ±1%
375.2
404.3
468.0
495.8
520.6
548.0
562.8
578.4
1633.0

8.1.3 Dual-frequency tone alert

When dual-tone alerts are implemented, the dual-tone alert frequency shall be selected from Table 3. These dual-tone alerts are intended to alert CPE devices that are on-hook and in an inactive state. The guard frequency is always transmitted with one of the other frequencies. A single dual-tone alert has been recommended by Bellcore for CPE devices that are in the off-hook or active state [known as a CPE alerting signal (CAS), which is 2130 Hz and 2750 Hz (duration 50–55 ms)]. These eight on-hook dual-tone alerts are considered a companion to the Bellcore-recommended off-hook alert tone (see Table 3).

Table 3—Alert tone frequencies for dual-tone alerts

Dual-tone alerts	
Frequency (Hz) ±1%	**Description[a]**
1827.0	UTS Guard Frequency (always present with one of the below frequencies)
375.2	UTS Alert — 4
404.3	UTS Alert — 5
468.0	UTS Alert — 3
495.8	UTS Alert — 6
520.6	UTS Alert — 1
548.0	UTS Alert — 7
562.8	UTS Alert — 8
578.4	UTS Alert — 2

[a]UTS alert number is out of order to be consistent with international alert designations.

Copyright © 1999 IEEE. All rights reserved.

Copyright The Institute of Electrical and Electronics Engineers, Inc.
Provided by IHS under license with IEEE
No reproduction or networking permitted without license from IHS
Not for Resale

8.2 Power ringing

8.2.1 Standard network ringing

The TIU may be alerted by one or more cycles of standard telephone network power ringing.

8.2.2 Time-based network ringing

The TIU may be alerted by a continuous duration of telephone network ringing presently defined as a duration from 100 ms to 999 ms. The duration of the time-based ringing will depend on the ESP's service requirements with the end user. Use of this ringing condition must be coordinated with the serving telephone company.

8.3 Subaddressing

Subaddressing is a technique used to further identify the target of the telephone call beyond the telephone number itself. This standard provides subaddressing that allows TIU addressing of the device itself, a node in the device, a circuit in the node, a port on the circuit or node, or a device on a port. When the TIU receives the alert frequency and subaddress, the TIU goes off-hook (using the off-hook transmission method) and becomes active only if the addressed component is present. When the TIU receives the alert frequency and subaddress, the TIU remains on-hook (using the on-hook transmission method) and becomes active only if the addressed component is present.

Figure10 identifies a TIU with multiple nodes that are affected by different alerting/subaddressing conditions. Each node is alerted by a different frequency.

The TIU device itself is identified as node 0. To cause the TIU device itself to go off-hook (using the off-hook transmission method) and become active, node 0 would be alerted by frequency 1 with no subaddress. To cause the TIU device itself to go off-hook (using the off-hook transmission method) and communicate with circuit 0, alert frequency 1 would include subaddress 0. If subaddress 0 were present, the TIU would go off-hook (using the off-hook transmission method) and become active. If not present, the TIU would not go off-hook (using the off-hook transmission method) but remain inactive. To cause the TIU device itself to remain on-hook (using the on-hook transmission method) and become active, node 0 would be alerted by frequency 1 with no subaddress. To cause the TIU device itself to remain on-hook (using the on-hook transmission method) and communicate with circuit 0, alert frequency 1 would include subaddress 0. If subaddress 0 were present, the TIU would remain on-hook (using the on-hook transmission method) and become active. If not present, the TIU would remain on-hook (using the on-hook transmission method) and remain inactive.

Similarly, other circuits, nodes, ports, or devices may be addressed. For example, to communicate with node 1, port 1, and device 3, the TIU would be alerted by frequency 2 and subaddress 6. If the addressed device 3 were present, the TIU would go off-hook (using the off-hook transmission method) and become active. If the addressed device 3 were present, the TIU would remain on-hook (using the on-hook transmission method) and become active.

If a port were a gateway to a local area network (LAN), a tone would alert a specific node. A subaddress would be sent on the line, which represented a device on the LAN. In response to the alert tone and subaddress, if the device were present, the TIU would go off-hook (using the off-hook transmission method) and become active. In response to the alert tone and subaddress, if the device were present, the TIU would remain on-hook (using the on-hook transmission method) and become active.

Copyright © 1999 IEEE. All rights reserved.
Copyright The Institute of Electrical and Electronics Engineers, Inc.
Provided by IHS under license with IEEE
No reproduction or networking permitted without license from IHS
Not for Resale

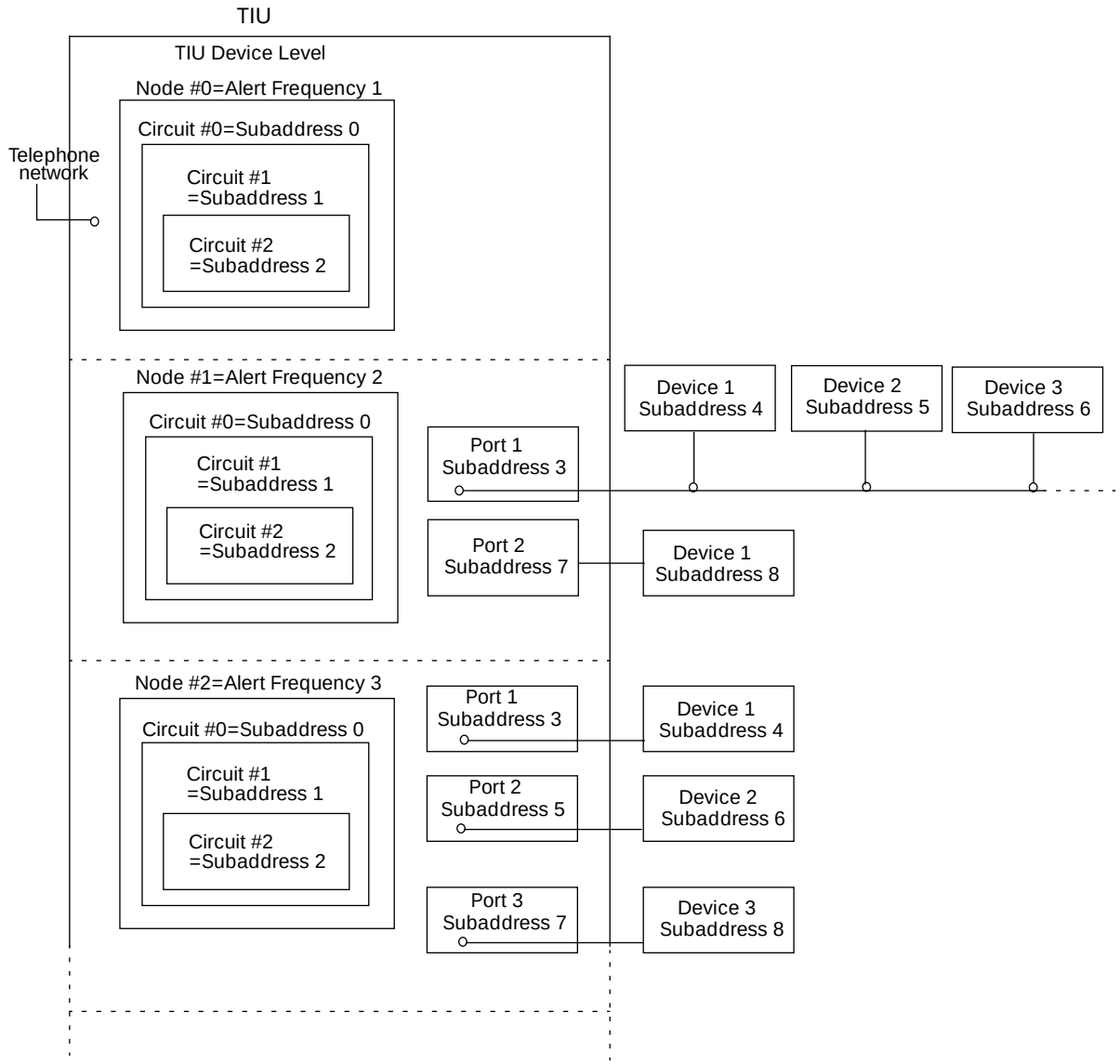

Figure 10—TIU addressing

9. Telephone network call origination

TIU inbound calling (call origination) requires the TIU to go off-hook. The TIU waits for dial tone. Alternatively, the TIU may time out instead of detecting dial tone. Upon receipt of dial tone or time out, the TIU shall present the required digits (touch tone or pulse). The telephone network will connect the call.

10. Telephone network interface—Transmission

Communication over the telephone network will be over the standard analog voicegrade lines.

Copyright © 1999 IEEE. All rights reserved.

Copyright The Institute of Electrical and Electronics Engineers, Inc.
Provided by IHS under license with IEEE
No reproduction or networking permitted without license from IHS
Not for Resale

10.1 Modem type and speed or DTMF

Communication with the telephone network may be by modem or DTMF signals. Modem implementations utilize voice band modems conforming to those listed in Table 4.

Table 4—Modem type

Modem type	Speed	CCITT V.xx series
Bell 103/113	300 BPS	V.21
Bell 212	1200 BPS	V.22
—	2400 BPS	V.22bis
—	4800 BPS	—
—	9600 BPS	V.24
Bell202	1200 BPS	—

Auto-speed adjusting modems are supported.

DTMF implementations utilize the telephone network standard DTMF frequencies.

11. Telephone network—Protocol

The data terminal equipment/data communications equipment (DTE/DCE) electrical specifications are specified in CCITT V.42.[6]

IEEE P1390.1/AMR.5/99-001, 3 February 1999 [B4], is presently under development. It is not part of this standard.

11.1 Security and encryption

Each TIU shall have a built-in security code or identification (ID) code for transmission with the call flow information. Additionally, a port address may be sent with the call flow information. This information is found in IEEE P1390.1/AMR.5/99-001, 3 February 1999 [B4].

IEEE P1390.1/AMR.5/99-001, 3 February 1999 [B4], identifies the TIU encryption techniques.

[6]CCITT publications are available from the International Telecommunications Union, Sales Section, Place des Nations, CH-1211, Genève 20, Switzerland/Suisse (http://www.itu.int/). They are also available in the United States from the U.S. Department of Commerce, Technology Administration, National Technical Information Service (NTIS), Springfield, VA 22161, USA.

Copyright © 1999 IEEE. All rights reserved.
Copyright The Institute of Electrical and Electronics Engineers, Inc.
Provided by IHS under license with IEEE
No reproduction or networking permitted without license from IHS
Not for Resale

12. Calls initiated by the utility or ESP (outbound—TIU off-hook transmission method)

12.1 COSU access method (Figure 11)

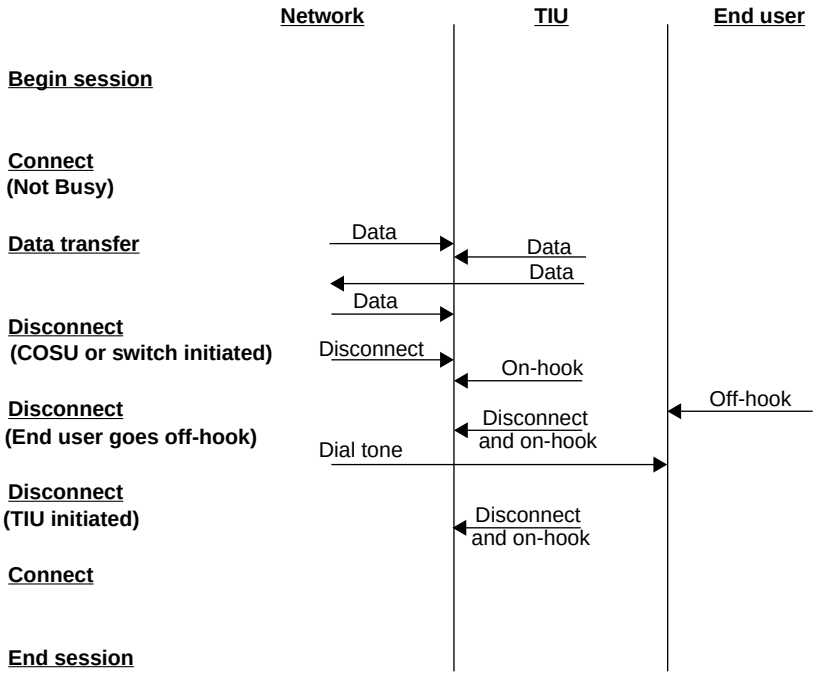

Figure 11—UTS call initiated by the utility COSU access method (off-hook TIU)

12.1.1 Billing for calls

The telephone network (switch) produces a billing record that charges the utility telephone number for the call.

12.1.2 Utility telemetry call connect (line not busy)

The telephone network will connect to the end user's line and alert the TIU. The TIU goes off-hook and becomes active. A security check is performed. If the security check is accepted, the telemetry data transfer stage is entered.

12.1.3 Utility telemetry call data transfer

One-way or two-way data communication may be initiated.

12.1.4 Utility telemetry call disconnect

The TIU shall go on-hook and become inactive when one of several described events take place. The TIU shall not cycle on-hook/off-hook during a single telemetry call. Only one on-hook/off-hook cycle is allowed per telemetry call. Immediate reseizure of the line is not allowed.

Copyright © 1999 IEEE. All rights reserved.

Copyright The Institute of Electrical and Electronics Engineers, Inc.
Provided by IHS under license with IEEE
No reproduction or networking permitted without license from IHS
Not for Resale

12.1.4.1 End user or end user CPE goes off-hook

The intent of this subclause is to give telephone line capabilities to the end user, when an end user (or end user's CPE) requests service by going off-hook without the end user doing anything special to gain access to the telephone line. When communicating, the TIU and/or telephone network (COSU) shall detect when the end user (or CPE) goes off-hook. When the TIU detects the end user's off-hook condition, the TIU shall communicate this change to the telephone network (COSU). The telephone network (COSU) initiates the telemetry call disconnect. The TIU goes on-hook and becomes inactive. The telephone network, sensing an off-hook remaining on the line after the disconnect signal (800 ms open), initiates a new call and delivers dial tone to the end user.

12.1.4.2 Disconnect signal from telephone network (switch)

The telephone network will, at various times, send an 800 ms disconnect signal to the line. This disconnect signal is to insure that all CPE devices clear the line. Upon receipt of this disconnect signal, the TIU must go on-hook and become inactive within 600 ms from the start of the disconnect signal (Figure 12).

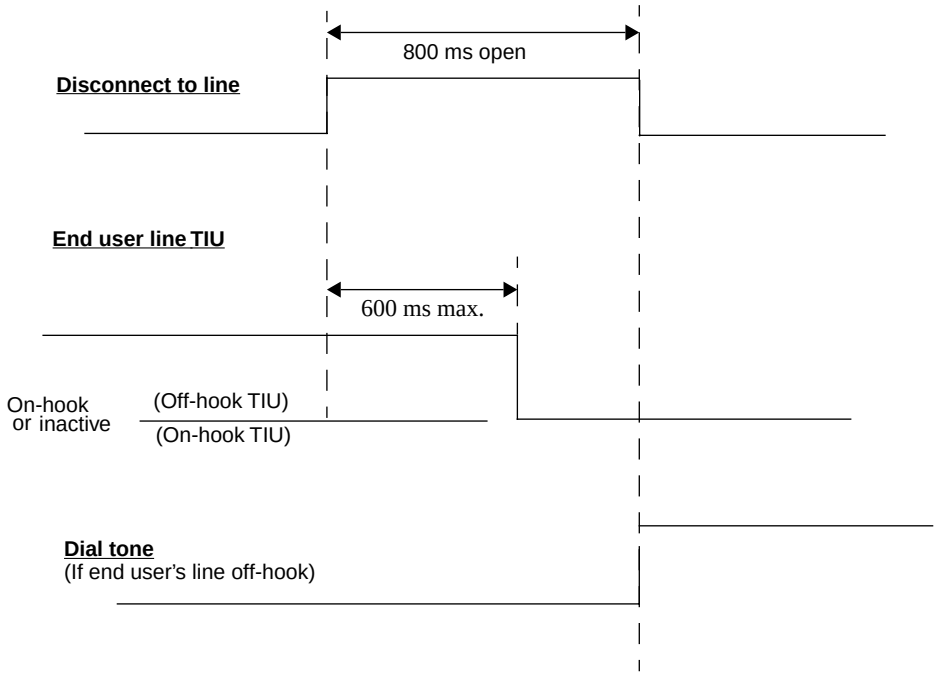

Figure 12—UTS disconnect timing

12.1.4.3 Disconnect information element In data stream

As part of the data communication protocol defined in IEEE Std 1390-1995, IEEE P1390.1/AMR.5/99-001, 3 February 1999 [B4], and IEEE Std 1390.3-1998, the TIU may receive a disconnect command. Upon receipt of this command, the TIU shall go on-hook and become inactive.

12.1.4.4 Disconnect from the TIU

At the completion of the telemetry data transfer, the TIU may go on-hook and become inactive or wait for a command from the utility controller. The TIU may go on-hook and become inactive based on other undefined internal conditions. When the TIU goes on-hook, the telephone network will take the telemetry call down.

Copyright © 1999 IEEE. All rights reserved.
Copyright The Institute of Electrical and Electronics Engineers, Inc.
Provided by IHS under license with IEEE
No reproduction or networking permitted without license from IHS
Not for Resale

12.1.4.5 Loss of carrier or line

When loss of carrier or telephone network line is detected, the TIU must immediately go on-hook and become inactive. Internal TIU recovery actions may be required.

12.1.5 Utility telemetry call connect (busy or other not available conditions)

If the end user's line is busy or not available, the telephone network will not connect to the end user's line. IEEE P1390.1/AMR.5/99-001, 3 February 1999 [B4], defines the responses sent to the utility controller under these conditions.

12.2 Direct dial access method (Figure 13)

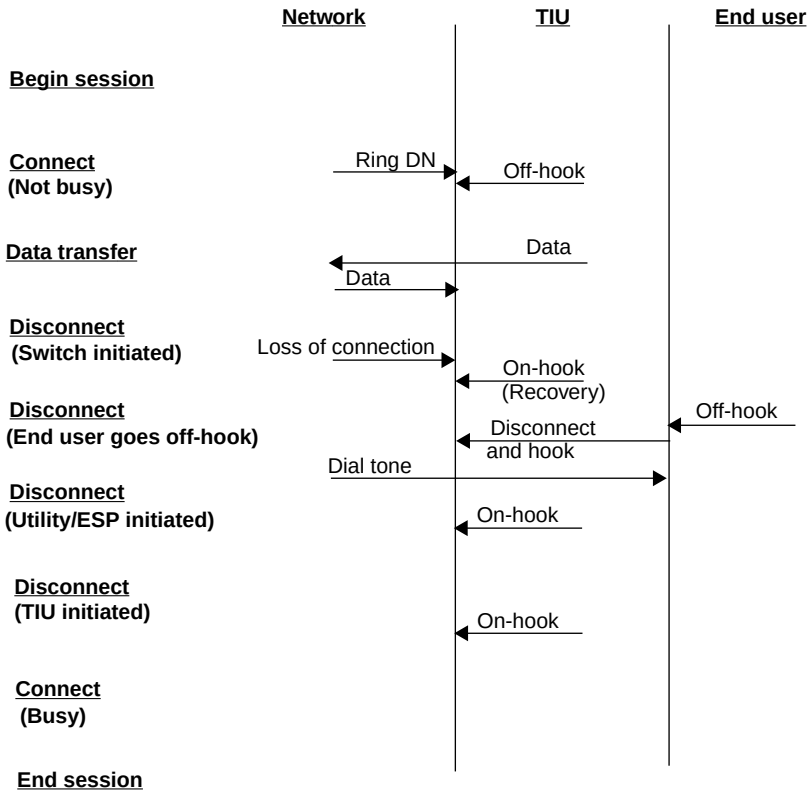

Figure 13—UTS call initiated by the utility direct dial access method (off-hook TIU)

12.2.1 Billing for calls

The utility directory number is directly billed for initiating this type of call.

12.2.2 Utility telemetry call connect (not busy)

The telephone network will connect to the end user's line and ring the line. A number of different techniques have been implemented to cause the TIU to go off-hook and become active. Depending on the technique employed, the TIU either answers the call or dials back the utility/ESP. If a later call-back is required, the technique is described in Clause 13.

Copyright © 1999 IEEE. All rights reserved.

Copyright The Institute of Electrical and Electronics Engineers, Inc.
Provided by IHS under license with IEEE
No reproduction or networking permitted without license from IHS
Not for Resale

NOTE—The call may be diverted to another directory number if the end user has call forwarding active on the line.

12.2.3 Utility telemetry call alert and data transfer

One-way or two-way data communication may be initiated.

12.2.4 Utility telemetry call disconnect

The TIU shall go on-hook and become inactive when one of several events take place. The TIU shall not cycle on-hook/off-hook during a single telemetry call. Only one on-hook/off-hook cycle is allowed per telemetry call. Immediate reseizure of the line is not allowed.

12.2.4.1 End user or end user's CPE goes off-hook

The intent of this subclause is to give telephone line capabilities to the end user, when an end user (or end user's CPE) requests service by going off-hook without the end user doing anything special to gain access to the telephone line. When communicating, the TIU must detect when the end user (or CPE) goes off-hook. When the TIU detects the end user's off-hook condition, the TIU shall communicate this change to the utility controller. The utility controller goes on-hook, which will terminate the switched network call. The TIU goes on-hook and becomes inactive. The telephone network (switch), sensing an off-hook remaining on the line, delivers dial tone to the end user.

NOTE—If the modified calling line disconnect feature is assigned to the line, the telephone network will require the line to go on-hook prior to delivery of dial tone.

12.2.4.2 Disconnect signal from telephone network (switch)

The network will, at various times, send an 800 ms disconnect signal to the line. This disconnect signal is to insure that all CPE devices clear the line. Upon receipt of this disconnect signal, the TIU shall go on-hook and become inactive within 600 ms from the start of the disconnect signal (Figure 12).

12.2.4.3 Disconnect information element In data stream

As part of the data communication protocol defined in IEEE Std 1390-1995, IEEE P1390.1/AMR.5/99-001, 3 February 1999 [B4], and IEEE Std 1390.3-1998, the TIU may receive a disconnect command. Upon receipt of this command, the TIU shall go on-hook and become inactive.

12.2.4.4 Disconnect from TIU

At the completion of the telemetry data transfer, the TIU may go on-hook and become inactive or wait for a command from the utility controller. The TIU may go on-hook and become inactive based on other conditions. When the TIU goes on-hook, the telephone network will take the telemetry call down. If the TIU goes on-hook and the utility controller remains off-hook, the telephone network will not disconnect the call due to post-disconnect timing. The call will be disconnected at the end of the post disconnect timing period or when the utility controller goes on-hook, whichever occurs first.

12.2.4.5 Loss of carrier or line

When loss of carrier or telephone line is detected, the TIU must immediately go on-hook and become inactive. Internal TIU recovery may be required.

--`,,`,,-`-`,,`,,`,`,,`---

Copyright © 1999 IEEE. All rights reserved.
Copyright The Institute of Electrical and Electronics Engineers, Inc.
Provided by IHS under license with IEEE
No reproduction or networking permitted without license from IHS
Not for Resale

12.2.5 Utility telemetry call connect (busy or other unavailable conditions)

When the end user's line is busy or unavailable, a ringing connection is not established with the end user's line. The utility/ESP may receive a busy signal, other telephone network signals, ringing if the end user has call waiting, or be diverted to another directory number if the end user has call forwarding busy active on the line.

13. Calls initiated by the TIU (inbound—TIU off-hook transmission method)

13.1 COSU access method (Figure 14 and Figure 15)

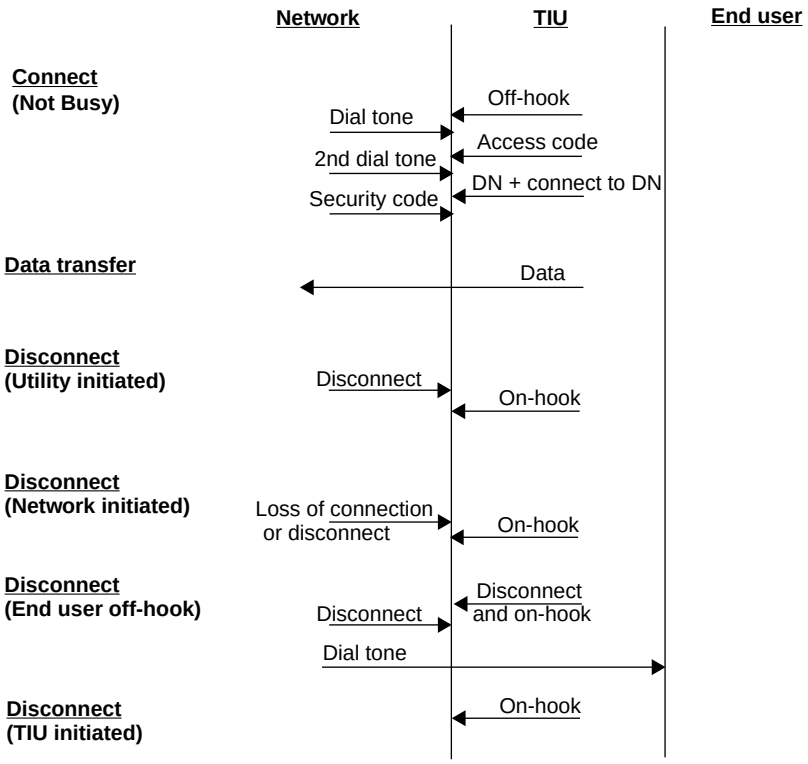

Figure 14—UTS call initiated by the TIU COSU access method (off-hook TIU)

13.1.1 Billing for calls

All inbound calls are allowed since the telephone network (switch) produces a billing record charging the utility directory number (reverse charging).

13.1.2 Utility telemetry call connect (line not busy)

The TIU, after detecting an idle line, goes off-hook, becomes active, waits for dial tone, and dials the utility or ESP by presenting an access code to the telephone network. At the second dial tone, the TIU sends out the telephone network (COSU) directory number, and the utility/ESP directory number to the telephone network. This first connection with the telephone network (COSU) allows for a security check to take place between the telephone network (COSU) and TIU. If the security check is accepted, the telephone network (COSU) initiates a connection to the required utility or ESP and the telemetry data transfer stage is entered.

Copyright © 1999 IEEE. All rights reserved.

Copyright The Institute of Electrical and Electronics Engineers, Inc.
Provided by IHS under license with IEEE
No reproduction or networking permitted without license from IHS
Not for Resale

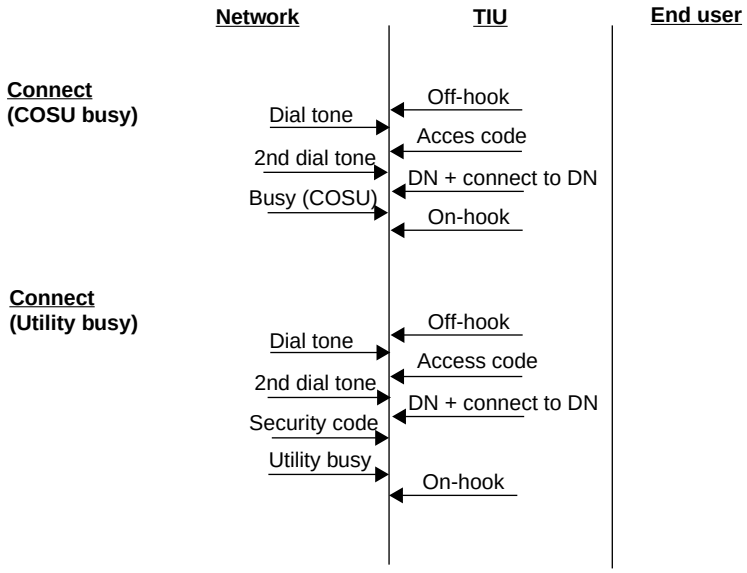

Figure 15—UTS call initiated by the TIU COSU access method (off-hook TIU)

If the security check is not accepted, the call is disconnected and the TIU goes on-hook. If there is no answer from the telephone network (COSU) or utility, the TIU shall go on-hook and become inactive.

13.1.3 Utility telemetry call data transfer

One-way or two-way communication may be initiated.

13.1.4 Utility telemetry call disconnect

The TIU shall go on-hook and become inactive when one of several events take place. The TIU shall not cycle on-hook/off-hook during a single telemetry call. Only one on-hook/off-hook cycle is allowed per telemetry call. Immediate reseizure of the line is not allowed.

13.1.4.1 End user or end user's CPE goes off-hook

The intent of this subclause is to give telephone line capabilities to the end user, when an end user (or end user's CPE) requests service by going off-hook without the end user doing anything special to gain access to the telephone line. When communicating, the TIU and/or telephone network (COSU) shall detect when the end user (or CPE) goes off-hook. When the TIU detects the end user's off-hook condition, the TIU shall communicate this change to the telephone network (COSU). The telephone network (COSU) initiates call disconnect. The TIU goes on-hook and becomes inactive. The telephone network (switch), sensing an off-hook remaining on the line after the 800 ms open, initiates a new call and delivers dial tone to the end user.

13.1.4.2 Disconnect signal from telephone network (switch)

The network will, at various times, send an 800 ms disconnect signal to the line. This disconnect signal is to insure that all CPE devices clear the line. Upon receipt of this disconnect signal, the TIU must go on-hook and become inactive within 600 ms from the start of the disconnect signal (see Figure 12).

Copyright © 1999 IEEE. All rights reserved.
Copyright The Institute of Electrical and Electronics Engineers, Inc.
Provided by IHS under license with IEEE
No reproduction or networking permitted without license from IHS
Not for Resale

13.1.4.3 Disconnect information element In data stream

As part of the data communication protocol defined in IEEE Std 1390-1995 and IEEE P1390.1/AMR.5/99-001, 3 February 1999 [B4], the TIU may receive a disconnect command. Upon receipt of this command, the TIU shall go on-hook and become inactive.

13.1.4.4 Disconnect by the TIU

At the completion of the telemetry data transfer, the TIU may go on-hook and become inactive or wait for a command from the utility controller. The TIU may go on-hook and become inactive based on other undefined internal conditions. When the TIU goes on-hook, the telephone network will take the call down.

13.1.4.5 Loss of carrier or line

When loss of carrier or the telephone network line is detected, the TIU must immediately go on-hook and become inactive. Internal TIU recovery actions may be required.

13.1.5 Utility telemetry call connect (busy and other unavailable conditions)

If the utility/ESP or COSU directory number is busy, the TIU will receive a busy signal. The TIU immediately goes on-hook and becomes inactive. The TIU may also receive a reorder tone [480 Hz + 620 Hz at 120 intervals per minute (IPM)] for temporary conditions or permanent signal tone (480 Hz steady) for unavailable conditions.

13.2 Direct dial access method (Figure 16)

13.2.1 Billing for calls

If no local billing arrangements can be made or there is an end user charge for the call, only toll-free number calls or third-party charged calls (credit card calls, etc.) shall be made.

13.2.2 Utility telemetry call connect (not busy)

The TIU, after detection of an idle line, goes off-hook, becomes active, and dials the utility or ESP directly. The TIU may also dial end-user-activated access codes that may activate or deactivate end user network features. A connection is made with the directory number.

13.2.3 Utility telemetry call data transfer

One-way or two-way data communication may be initiated.

13.2.4 Utility telemetry call disconnect

The TIU shall go on-hook and become inactive when one of several described events take place. The TIU shall not cycle on-hook/off-hook during a single telemetry call. Only one on-hook/off-hook cycle is allowed per telemetry call. Immediate reseizure of the line is not allowed.

13.2.4.1 End user or end user’s CPE goes off-hook

The intent of this subclause is to give telephone line capabilities to the end user, when an end user (or end user’s CPE) requests service by going off-hook without the end user doing anything special to gain access to the telephone line. When communicating, the TIU must detect when the end user (or CPE) goes off-hook. In response, the utility controller goes on-hook. When the TIU detects the end user’s off-hook condition, the

Copyright © 1999 IEEE. All rights reserved.

Copyright The Institute of Electrical and Electronics Engineers, Inc.
Provided by IHS under license with IEEE
No reproduction or networking permitted without license from IHS
Not for Resale

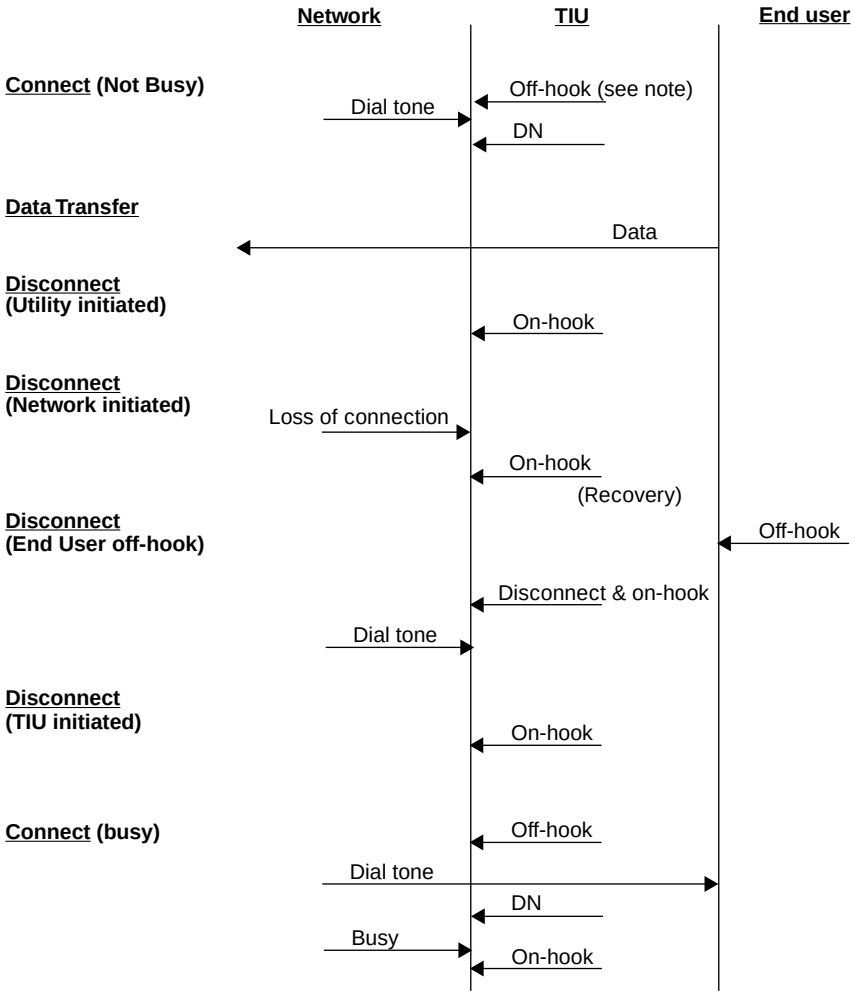

NOTE—In some cases these calls are initiated by an event external to the TIU.

Figure 16—UTS call initiated by the TIU direct dial access method

TIU shall communicate this change to the utility controller. Upon detecting the end user (or CPE) off-hook, the TIU goes on-hook and becomes inactive. The telephone network (switch), sensing an off-hook remaining on the line, delivers dial tone to the end user.

NOTE—If the utility controller remains off-hook, the telemetry call will not be disconnected. Also, if the utility controller goes on-hook, the telephone network will not disconnect the call due to post-disconnect timing. The call will be disconnected at the end of the post-disconnect timing or when the end user goes on-hook, whichever occurs first.

13.2.4.2 Disconnect signal from telephone network (switch)

The network will, at various times, send an 800 ms disconnect signal to the line. This disconnect signal is to insure that all CPE devices clear the line. Upon receipt of this disconnect signal, the TIU shall go on-hook and become inactive within 600 ms after the start of the disconnect signal (Figure 12).

Copyright © 1999 IEEE. All rights reserved.
Copyright The Institute of Electrical and Electronics Engineers, Inc.
Provided by IHS under license with IEEE
No reproduction or networking permitted without license from IHS
Not for Resale

13.2.4.3 Disconnect information element In data stream

As part of the data communication protocol defined in IEEE Std 1390-1995 and IEEE P1390.1/AMR.5/99-001, 3 February 1999 [B4], the TIU may receive a disconnect command. Upon receipt of this command, the TIU shall go on-hook and become inactive.

13.2.4.4 Disconnect by the TIU

At the completion of the telemetry data transmission, the TIU may go on-hook and become inactive or wait for a command from the utility controller. The TIU may go on-hook and become inactive based on other undefined internal conditions. When the TIU goes on-hook, the telephone network will take the telemetry call down.

13.2.4.5 Loss of carrier or line

When loss of carrier or telephone line connection is detected, the TIU must immediately go on-hook and become inactive. Internal TIU recovery techniques may be required.

13.2.5 Utility telemetry call connect (busy and other unavailable conditions)

If the utility/ESP directory number is busy or unavailable, the TIU will receive a busy signal. The TIU shall go on-hook and become inactive. The TIU may also receive other telephone network standard tones, including announcements.

14. Calls initiated by the utility or ESP (outbound—TIU on-hook transmission method)

14.1 COSU access method (Figure 17)

14.1.1 Billing for calls

The telephone network (switch) produces a billing record that charges the utility telephone number for the call.

14.1.2 Utility telemetry call connect (line not busy)

The telephone network will connect to the end user’s line and alert the TIU. The TIU remains on-hook but becomes active. A security check is performed. If the security check is accepted, the telemetry data transfer stage is entered

14.1.3 Utility telemetry call data transfer

One-way or two-way data communication may be initiated.

14.1.4 Utility telemetry call disconnect

The TIU shall to become inactive when one of several events take place. The TIU shall not cycle active/inactive during a single telemetry call. Only one active/inactive cycle is allowed per telemetry call. Immediate reseizure of the line is not allowed.

Copyright © 1999 IEEE. All rights reserved.

Copyright The Institute of Electrical and Electronics Engineers, Inc.
Provided by IHS under license with IEEE
No reproduction or networking permitted without license from IHS
Not for Resale

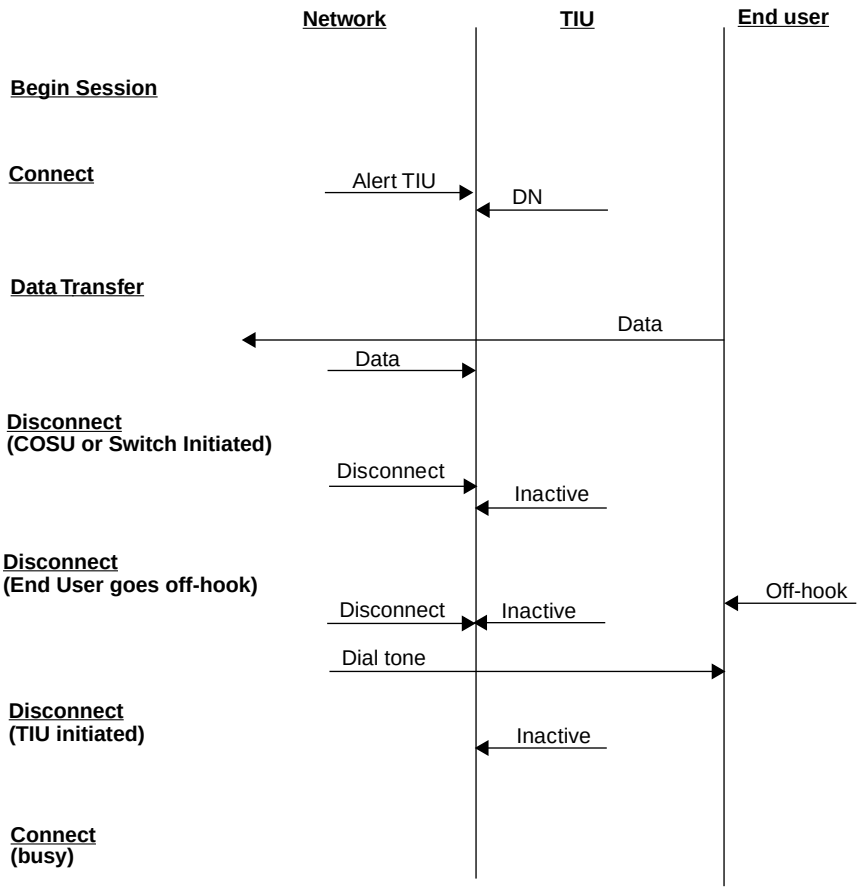

Figure 17—UTS call initiated by the utility COSU access method (on-hook TIU)

14.1.4.1 End user or end user CPE goes off-hook

The intent of this subclause is to give telephone line capabilities to the end user, when an end user (or end user's CPE) requests service by going off-hook without the end user doing anything special to gain access to the telephone line. When communicating, the telephone network (switch) will detect when the end user (or CPE) goes off-hook. The telephone network (switch) initiates the telemetry call disconnect. The TIU becomes inactive. The telephone network, sensing an off-hook on the line after the disconnect signal (800 ms open), initiates a new call and delivers dial tone to the end user.

14.1.4.2 Disconnect signal from telephone network (switch)

The telephone network will, at various times, send an 800 ms disconnect signal to the line. This disconnect signal is to insure that all CPE devices clear the line. Upon receipt of this disconnect signal, the TIU must become inactive within 600 ms from the start of the disconnect signal (Figure 12).

14.1.4.3 Disconnect information element in data stream

As part of the data communication protocol defined in other standards documents, the TIU may receive a disconnect command. Upon receipt of this command, the TIU shall become inactive.

Copyright © 1999 IEEE. All rights reserved.
Copyright The Institute of Electrical and Electronics Engineers, Inc.
Provided by IHS under license with IEEE
No reproduction or networking permitted without license from IHS
Not for Resale

14.1.4.4 Disconnect from the TIU

At the completion of the telemetry data transfer, the TIU may become inactive, notifying the telephone network (COSU) to disconnect the telemetry call, or may wait for a command from the utility controller. The TIU may become inactive based on other undefined internal conditions.

14.1.4.5 Loss of carrier or line

When loss of carrier or telephone network line is detected, the TIU must immediately become inactive. Internal TIU recovery actions may be required.

Copyright © 1999 IEEE. All rights reserved.

Copyright The Institute of Electrical and Electronics Engineers, Inc.
Provided by IHS under license with IEEE
No reproduction or networking permitted without license from IHS Not for Resale

Annex A

(informative)

Bibliography

[B1] Bellcore PUB 41005, “Data communications using the switched telecommunications network.”

[B2] Bellcore PUB 41008, “Analog parameters affecting voiceband data transmission—Description of parameters.”

[B3] Bellcore TR-TSY-000506, LATA Switching Systems Generic Requirements (LSSGR), Section 6—Signaling.

[B4] IEEE P1390.1/AMR.5/99-001, 3 February 1999, Draft Standard for Utility Telemetry Service Transport Profile Protocols for Switched Telephone Network.[7]

[7]This IEEE standards project was not approved by the IEEE-SA Standards Board at the time this publication went to press. For information about obtaining a draft, contact the IEEE.

Copyright © 1999 IEEE. All rights reserved.
Copyright The Institute of Electrical and Electronics Engineers, Inc.
Provided by IHS under license with IEEE
No reproduction or networking permitted without license from IHS
Not for Resale