Recognized as an
American National Standard (ANSI)

IEEE Std 1308-1994 (R2001)

IEEE Recommended Practice for Instrumentation: Specifications for Magnetic Flux Density and Electric Field Strength Meters—10 Hz to 3 kHz

Sponsor
Transmission and Distribution Committee
of the
IEEE Power Engineering Society

Reaffirmed September 25, 2001
Approved December 13, 1994
IEEE Standards Board

Reaffirmed January 30, 2002
Approved July 10, 1995
American National Standards Institute

Abstract: Specifications that should be provided to characterize instrumentation used to measure the steady state rms value of magnetic and electric fields with sinusoidal frequency content in the range 10 Hz to 3 kHz in residential and occupational settings as well as in transportation systems are identified. The instrumentation, recommended calibration methods, and sources of measurement uncertainty are also described.

Keywords: calibration, electric field strength meters, magnetic flux density, measurements, measurement uncertainty, quasi-static fields, specifications.

The Institute of Electrical and Electronics Engineers, Inc. 345 East 47th Street, New York, NY 10017-2394, USA

Copyright 1995 by The Institute of Electrical and Electronics Engineers, Inc. All rights reserved. Published 1995. Printed in the United States of America.

ISBN 1-55937-513-2

No part of this publication may be reproduced in any form, in an electronic retrieval system or otherwise, without the prior written permission of the publisher.

Copyright The Institute of Electrical and Electronics Engineers, Inc.
Provided by IHS under license with IEEE
No reproduction or networking permitted without license from IHS
Not for Resale

IEEE Standards documents are developed within the Technical Committees of the IEEE Societies and the Standards Coordinating Committees of the IEEE Standards Board. Members of the committees serve voluntarily and without compensation. They are not necessarily members of the Institute. The standards developed within IEEE represent a consensus of the broad expertise on the subject within the Institute as well as those activities outside of IEEE that have expressed an interest in participating in the development of the standard.

Use of an IEEE Standard is wholly voluntary. The existence of an IEEE Standard does not imply that there are no other ways to produce, test, measure, purchase, market, or provide other goods and services related to the scope of the IEEE Standard. Furthermore, the viewpoint expressed at the time a standard is approved and issued is subject to change brought about through developments in the state of the art and comments received from users of the standard. Every IEEE Standard is subjected to review at least every five years for revision or reaffirmation. When a document is more than five years old and has not been reaffirmed, it is reasonable to conclude that its contents, although still of some value, do not wholly reflect the present state of the art. Users are cautioned to check to determine that they have the latest edition of any IEEE Standard.

Comments for revision of IEEE Standards are welcome from any interested party, regardless of membership affiliation with IEEE. Suggestions for changes in documents should be in the form of a proposed change of text, together with appropriate supporting comments.

Interpretations: Occasionally questions may arise regarding the meaning of portions of standards as they relate to specific applications. When the need for interpretations is brought to the attention of IEEE, the Institute will initiate action to prepare appropriate responses. Since IEEE Standards represent a consensus of all concerned interests, it is important to ensure that any interpretation has also received the concurrence of a balance of interests. For this reason IEEE and the members of its technical committees are not able to provide an instant response to interpretation requests except in those cases where the matter has previously received formal consideration.

Comments on standards and requests for interpretations should be addressed to:

Secretary, IEEE Standards Board
445 Hoes Lane
P.O. Box 1331
Piscataway, NJ 08855-1331
USA

Copyright The Institute of Electrical and Electronics Engineers, Inc.
Provided by IHS under license with IEEE
No reproduction or networking permitted without license from IHS
Not for Resale

Introduction

(This introduction is not part of IEEE Std 1308-1994, IEEE Recommended Practice for Instrumentation: Specifications for Magnetic Flux Density and Electric Field Strength Meters—10 Hz to 3 kHz.)

This recommended practice identifies instrument specifications that should be provided to characterize field meters that are used to measure the root-mean-square (rms) values of electric and magnetic fields in residences, the work place, and transportation systems. Because of recent interest in power frequency and other extremely low frequency fields in the above environments, and because of the growing number of commercially available field meters, a need has developed for establishing specifications for instrumentation used to measure fields in the various mentioned settings. In addition to identifying field meter specifications that should be provided, this document includes descriptions of instrumentation, recommends methods of calibration, describes sources of measurement uncertainty, and provides guidance on determining total uncertainty. As noted in 1.2 of the Overview, while field meter specifications are identified, specific frequencies and field levels that should be used for calibration purposes and limits on measurement uncertainty are not recommended in this document. Rather, it is left to standards that describe measurement protocols for the different environments to indicate specific calibration points and uncertainty requirements.

The working group draft was prepared by the AC Magnetic Fields Task Force of the AC Fields Working Group (R. G. Olsen, Chair) of the Corona and Field Effects Subcommittee of the Transmission and Distribution Committee. The Task Force had the following membership:

M. Misakian, *Chair*

K. Bell	K.C. Jaffa	S. Rodick
T D. Bracken	G.B. Johnson	S.A. Sebo
R. E. Carberry	P.S. Maruvada	C.H. Shih
V. L. Chattier	S.J. Maurer	J.M. Silva
R. Conti	T.M. McDermott	J.R. Stewart
D. W. Deno	R.C. Mukherji	J.M. Van Name
F. M. Dietrich	J.C. Niple	P.S. Wong
G. Gela	R.G. Olsen	L.E. Zaffanella
	G. B. Rauch	

The following individuals reviewed and contributed comments:

E. Aslan	T. B. Lynn	G. Miller
H. Bassen		I. Walker

The following persons were on the balloting list:

J. E. Applequist	J. G. Kappenman	R. J. Piwko
J. F. Buch	G. G. Karady	W. E. Reid
J. J. Burke	N. Kolcio	D. Reisinger
V. L. Chartier	P. S. Maruvada	B. R. Shperling
F. A. Denbrock	T. J. McDermott	J. M. Silva
W. E. Feero	F. D. Myers	J. R. Stewart
G. Gela	S. L. Nilsson	J. M. Van Name
I. S. Grant	R. C. Peters	F. S. Young

Copyright The Institute of Electrical and Electronics Engineers, Inc.
Provided by IHS under license with IEEE
No reproduction or networking permitted without license from IHS
Not for Resale

When the IEEE Standards Board approved this recommended practice on December 13, 1994, it had the following membership:

Wallace S. Read, ***Chair***
Donald C. Loughry, ***Vice Chair***
Andrew G. Salem, ***Secretary***

Gilles A. Baril	Donald N. Heirman	D. N. "Jim" Logothetis
Bruce B. Barrow	Richard J. Holleman	L. Bruce McClung
José A. Berrios de la Paz	Jim Isaak	Marco W. Migliaro
Clyde R. Camp	Ben C. Johnson	Mary Lou Padgett
James Costantino	Sonny Kasturi	Arthur K. Reilly
Stephen L. Diamond	Lorraine C. Kevra	Ronald H. Reimer
Donald C. Fleckenstein	E. G. "Al" Kiener	Gary S. Robinson
Jay Forster*	Ivor N. Knight Gary	Leonard L. Tripp
Ramiro Garcia	Joseph L. Koepfinger*	

* Member Emeritus

Also included are the following nonvoting IEEE Standards Board liaisons:

Satish K. Aggarwal	
James Beall	Rochelle Stern
Richard B. Engelman	
Robert E. Hebner	

Rochelle L. Stern
IEEE Standards Project Editor

--`,,`-`-`,,`,,`,`,,`---

Copyright The Institute of Electrical and Electronics Engineers, Inc.
Provided by IHS under license with IEEE
No reproduction or networking permitted without license from IHS

Not for Resale

CONTENTS

1. Overview . . . 1

1.1 Scope . . . 1
1.2 General . . . 2

2. References . . . 2

3. Definitions . . . 2

4. General characteristics of magnetic and electric fields . . . 5

5. Magnetic flux density meters (magnetic field meters) . . . 7

5.1 General characteristics of magnetic field meters . . . 7
5.2 Theory of operation (coil probes)
5.3 Calibration methods for magnetic field meters . . . 11
5.4 Sources of measurement uncertainty . . . 13
5.5 Calibration procedure and specifications for magnetic field meters . . . 16
5.6 Measurement uncertainty . . . 19

6. Electric field strength meters (electric field meters) . . . 20

6.1 General characteristics of electric field meters . . . 20
6.2 Theory of operation . . . 20
6.3 Calibration methods for electric field meters . . . 24
6.4 Sources of measurement uncertainty . . . 28
6.5 Calibration procedure and specifications for electric field meters . . . 31
6.6 Measurement uncertainty . . . 33

7. Desirable field meter characteristics . . . 33

7.1 Electrical characteristics . . . 33
7.2 Physical characterisitcs . . . 33

Annex A (informative) DC magnetic field instrumentation . . . 35

Annex B (informative) Units and conversion factors . . . 36

Annex C (informative) Bibliography . . . 38

Copyright The Institute of Electrical and Electronics Engineers, Inc.
Provided by IHS under license with IEEE
No reproduction or networking permitted without license from IHS
Not for Resale

IEEE Recommended Practice for Instrumentation: Specifications for Magnetic Flux Density and Electric Field Strength Meters—10 Hz to 3 kHz

1. Overview

1.1 Scope

This recommended practice identifies specifications that should be provided to characterize instrumentation used to measure the steady state rms values of magnetic and electric fields with sinusoidal frequency content in the range 10 Hz to 3 kHz in residential and occupational settings as well as in transportation systems. The dynamic ranges of interest are 0.01 μT (0.1 mG) to 10 mT (100 G) and 1 V/m to 30 kV/m for magnetic and electric fields, respectively. In addition, this recommended practice

— Defines terminology
— Describes general characteristics of fields
— Surveys operational principles of instrumentation
— Indicates methods of calibration
— Identifies significant sources of error

While field meter specifications are identified, frequencies and field levels that should be used for calibration purposes, and limits on measurement uncertainty are not recommended in this standard. Rather, it is left to standards that describe measurement protocols for different environments to indicate specific calibration points and uncertainty requirements.

NOTE—For example, IEEE Std 644-1994 [B15] [1] limits the total uncertainty during calibrations of magnetic and electric field meters used in the vicinity of ac power lines to ±3%.

However, sources of uncertainty during calibration and measurements are identified and guidance is provided on how they should be combined to determine total measurement uncertainty.

Throughout this recommended practice, the words “magnetic flux density” and “magnetic field” will be considered synonymous. In regard to electric field measurements, this recommended practice considers electric field meters that only measure the unperturbed electric field strength at a point in space (i.e., the electric field prior to the introduction of the field meter) or on conducting surfaces. Measurement protocols are not pro-

[1]The numbers in brackets correspond to those bibliographical items listed in annex C .

Copyright The Institute of Electrical and Electronics Engineers, Inc.
Provided by IHS under license with IEEE
No reproduction or networking permitted without license from IHS
Not for Resale

vided. Protocols for measuring electric and magnetic fields near power lines and video display terminals are described in IEEE Std 644-1994 [B15] and IEEE Std 1140-1994 [B16], respectively. Protocols for measuring only power frequency electric fields are described in IEC Publication 833 1987 [B11].

1.2 General

The increasing interest in characterizing quasi-static magnetic and electric fields in a number of environments has led to the development and marketing of many field meters with a range of specifications. Sources of quasi-static fields include devices that operate at power frequencies and produce power frequency and power frequency harmonic fields, as well as devices that produce fields that are independent of the power frequency. Examples in the latter category include video display terminals (vertical scan magnetic field), electric railroads (16.7 Hz and 25 Hz), mass transportation systems (0 Hz to 3 kHz depending on characteristics of adjustable speed drive), commercial airplanes (400 Hz), induction heaters (50 Hz to 3 kHz), and electric automobiles. Because of differences in the characteristics of the fields from sources in the various environments, e.g., frequency content, polarization, nonuniformity, and magnitude, the instrumentation requirements for measurements in the various environments will differ. While a variety of instrumentation exists to characterize these parameters, this recommended practice only pertains to the instrumentation to the extent that they measure the root-mean-square (rms) levels of the magnetic and electric fields.

2. References

This standard shall be used in conjunction with the following publications. When the following standards are superseded by an approved revision, the revision shall apply.

IEEE Std 100-1992, IEEE Standard Dictionary of Electrical and Electronics Terms (ANSI).[2]

IEEE Std 539-1990, IEEE Standard Definitions of Terms Relating to Corona and Field Effects of Overhead Power Lines (ANSI).

3. Definitions

For additional definitions, see IEEE Std 100-1992[3] and IEEE Std 539-1990.

3.1 ac electric field strength meter: A meter designed to measure ac electric fields. Three types of electric field strength meters are available—free-body meter, ground-reference meter, and electro-optic meter.

3.2 average sensing rms detector (see true rms detector): A detector circuit that rectifies the signal from the probe and is calibrated to give the correct rms value of a sinusoidal field at some given frequency.

If there are harmonics in the field, a field meter with an average sensing rms detector will not indicate the true rms value of the field if the signal from the probe is proportional to the time derivative of the field. If the detector contains a stage of integration, the error is reduced. The error will also be a function of the phase relation between the harmonic and fundamental field components [B20], [B34].

3.3 coil probe: A magnetic flux density sensor comprised of a coil of wire that produces an induced voltage proportional to the time derivative of the magnetic flux density.

---

[2]IEEE publications are available from the Institute of Electrical and Electronics Engineers, 445 Hoes Lane, P.O. Box 1331, Piscataway, NJ 08855-1331, USA.

[3]For information on references, see clause 2.

Copyright The Institute of Electrical and Electronics Engineers, Inc.
Provided by IHS under license with IEEE
No reproduction or networking permitted without license from IHS Not for Resale

NOTES:

1—To eliminate effects due to electric field induction, it is essential that the coil of wire be shielded.

2—Since the induced voltage is proportional to the time derivative of the magnetic flux density, the detector circuit of the sensor often contains an integrating stage to recover the waveform of the magnetic field. The integrating stage is also desirable, particularly for measurements of magnetic field strength with harmonic content, since this stage (i.e., its integrating property) eliminates the excessive weighting of the harmonic components in the voltage signal produced by the probe.

3—This probe can also be used to measure static (dc) magnetic flux density if the probe is rotated at a known rate.

3.4 crosstalk: The noise or extraneous signal caused by ac or pulse-type signals in adjacent circuits (measurement of power frequency magnetic fields).

3.5 electro-optic field meter: A meter that measures changes in the transmission of light through a fiber or crystal due to the influence of the electric field.

While there are several electro-optic methods that can be used for measuring electric fields, e.g., the Pockels effect, the Kerr effect, and interferometric techniques, this recommended practice only considers electro-optic field meters that utilize the Pockels effect.

3.6 free-body meter: A meter that measures the electric field strength at a point above the ground and that is supported in space without conductive contact to earth.

NOTE—Free-body meters are commonly constructed to measure the induced current between two isolated parts of a conductive body. Since the induced current is proportional to the time derivative of the electric field strength, the meter's detector circuit often contains an integrating stage in order to recover the waveform of the electric field. The integrated current waveform also coincides with that of the induced charge. The integrating stage is also desirable particularly for measurements of electric fields with harmonic content because this stage (i.e., its integrating property) eliminates the excessive weighting of the harmonic components in the induced current signal.

3.7 frequency response (bandwidth): The change in response (reading) of a field meter to a field of constant amplitude but different frequencies.

The range of frequencies over which the field meter response is constant to within 3 dB is often referred to as the bandwidth of the field meter.

3.8 fluxgate magnetometer: An instrument for measuring magnetic fields by making use of the nonlinear magnetic characteristics of a probe or sensing element that has a ferromagnetic core.

3.9 ground reference meter: A meter that measures the electric field at or close to the surface of the ground, frequently implemented by measuring the induced current or charge oscillating between an isolated electrode and ground. The isolated electrode is usually a plate located level with or slightly above the ground surface.

NOTE—Ground reference meters measuring the induced current often contain an integrator circuit to compensate for the derivative relationship between the induced current and the electric field.

3.10 Hall-effect probe: A magnetic flux density sensor containing an element exhibiting the Hall-effect to produce a voltage proportional to the magnetic flux density.

Hall-effect probes respond to static as well as time varying magnetic flux densities. Due to saturation problems sometimes encountered when attempting to measure small power frequency flux densities in the presence of the substantial static geomagnetic flux of the earth, Hall-effect probes have seldom been used under ac power lines.

Copyright The Institute of Electrical and Electronics Engineers, Inc.
Provided by IHS under license with IEEE
No reproduction or networking permitted without license from IHS
Not for Resale

3.11 magnetic flux density meter: A meter designed to measure the magnetic flux density.

Several types of meters are in common use, e.g., field meters with air core coil probes, meters with Hall-effect probes, and meters that combine two coils with a ferromagnetic core as in a fluxgate magnetometer.

3.12 maximum value of magnetic field: (measurement of power frequency electric and magnetic fields from ac power lines). At a given point, the root-mean-square (rms) value of the semi-major axis of the magnetic field ellipse.

3.13 measurement uncertainty: (test, measurement, and diagnostic equipment). The limits of error about a measured value between which the true value will lie with the confidence stated.

Uncertainty of measurement comprises, in general, many components. Some of these components may be estimated on the basis of the statistical distribution of the results of series of measurements and can be characterized by experimental standard deviations. Estimates of other components can be based on experience or other information.

3.14 pass band: (1) (data transmission) A range of frequency spectrum that can pass at low attenuation. (2) (circuits and systems) A band of frequencies that pass through a filter with little attenuation (relative to other frequency bands such as a stop band).

3.15 quasi-static field: A field that satisfies the condition $f << c/l\pi\sqrt{2}$, where f is the frequency of the field, c is the speed of light, and l is a characteristic dimension of the measurement geometry, e.g., the distance between the field source and the measurement point.

NOTE—Power frequency magnetic and electric fields near power lines and appliances are examples of quasi-static fields.

3.16 resultant magnetic field: The magnetic field given by the expression

$$B_R = \sqrt{B_x^2 + B_y^2 + B_z^2} \tag{1}$$

where

B_x, B_y, and B_z are the rms values of the three orthogonal field components.

NOTE—The resultant magnetic field is also given by the expression:

$$B_R = \sqrt{B_{max}^2 + B_{min}^2} \tag{2}$$

where

B_{max} *and* B_{min} are the rms values of the semi-major and semi-minor axes of the magnetic field ellipse, respectively.

The resultant B_R is always ≥ B_{max}. If the magnetic field is linearly polarized, $B_{min} = 0$ and $B_R = B_{max}$. If the magnetic field is circularly polarized, $B_{max} = B_{min}$ and $B_R = 1.41\ B_{max}$.

3.17 spot measurement (point-in-time measurement): A measurement that is performed at some instant and point in space that does not provide information regarding temporal or spatial variations of the field.

3.18 survey meter: A lightweight battery operated meter that can be held conveniently by hand in order to conduct survey type measurements.

Copyright The Institute of Electrical and Electronics Engineers, Inc.
Provided by IHS under license with IEEE
No reproduction or networking permitted without license from IHS Not for Resale

3.19 true rms detector (see average-sensing rms detector): A detector that contains a circuit component that performs the mathematical operation

$$\sqrt{\frac{1}{T}\int_0^T ([v(t)]^2 dt)} \tag{3}$$

to a periodic signal, *v(t)*

where

T is the period of the signal.

NOTE—If there are harmonics in the field and *v(t)* is proportional to the time-derivative of the field, the detector circuit must also contain a stage of integration prior to the rms operation in order to avoid error [B13], [B34]. This type of detector gives the true rms value of a field containing harmonics provided that the frequency response of the detector is flat over the frequency range of interest. If significant levels of harmonics are present in *v(t)*, particular attention should be given to the possibility of amplifier saturation effects if the integration follows one or more stages of amplification.

4. General characteristics of magnetic and electric fields

Magnetic and electric fields produced by power lines, appliances, and transportation systems can be characterized according to their magnitude, frequency, waveform (harmonic content), degree of polarization, spatial variation, and temporal variation. These characteristics are described briefly because of their importance in specifying requirements for instrumentation used to measure the fields.

NOTE—This recommended practice does not consider transient temporal variations, i.e., events that are fast compared to the period of the magnetic and electric fields.

Several of the above field parameters can be introduced by considering magnetic fields produced by three phase power lines. Some of the same parameters are also used to characterize electric fields. In general, the magnetic field at a point can be represented as a rotating vector that traces an ellipse for every cycle of the currents in the conductors as shown schematically in figure 1 a) [B4]. The rms magnitude and direction of the semi-major axis, given by *M* in figure 1 a), indicates the magnitude and direction of the maximum magnetic field. Similarly, the rms magnitude and direction of the semi-minor axis, given by *m* in figure 1 a), describes the minimum magnetic field. Such fields are said to be elliptically polarized.

Because magnetic fields in environments away from power lines also can be produced by multiple current sources that are not necessarily in phase, elliptically polarized magnetic fields can occur in many settings (e.g., homes, work place). Depending on the geometry and currents in the conductors, the degree of magnetic field polarization at a point can vary from linear ($m = 0$) to circular ($m = M$) as shown in figures 1 b) and 1c). This discussion of polyphase fields assumes that there are no harmonics in the field. The polarization state of fields with significant harmonic content is more complicated [B34].

Near ground level, the magnitude of the magnetic field from a three-phase transmission line changes slowly as a function of height of the measurement point above ground. For example, for a typical 500 kV line, the change in the magnetic field magnitude near ground level is less than 2% for a 10% change in the measurement height for locations underneath the line. The uniformity increases at more distant points. For locations far from the line, the magnitude of the magnetic field from a single circuit three-phase line with balanced or nearly balanced currents decreases approximately as $1/d^2$, where d is the lateral distance from the line (d is assumed to be much greater than the conductor spacing) [B29]. As the current imbalance increases, the decrease in magnetic field magnitude changes from a $1/d^2$ to a $1/d$ dependence [B29], [B37]. The magnetic field from balanced double-circuit three-phase lines with low reactance phasing (i.e., for identical or nearly

Copyright The Institute of Electrical and Electronics Engineers, Inc.
Provided by IHS under license with IEEE
No reproduction or networking permitted without license from IHS
Not for Resale

identical load currents for both circuits) decreases as $1/d^3$ where d is again much larger than conductor spacing. The temporal variations of the magnetic field is a function of load current variations, e.g., during heavy usage of electrical energy, the load currents increase and produce greater magnetic fields (the concurrent sagging of the conductors also can contribute to greater field levels).

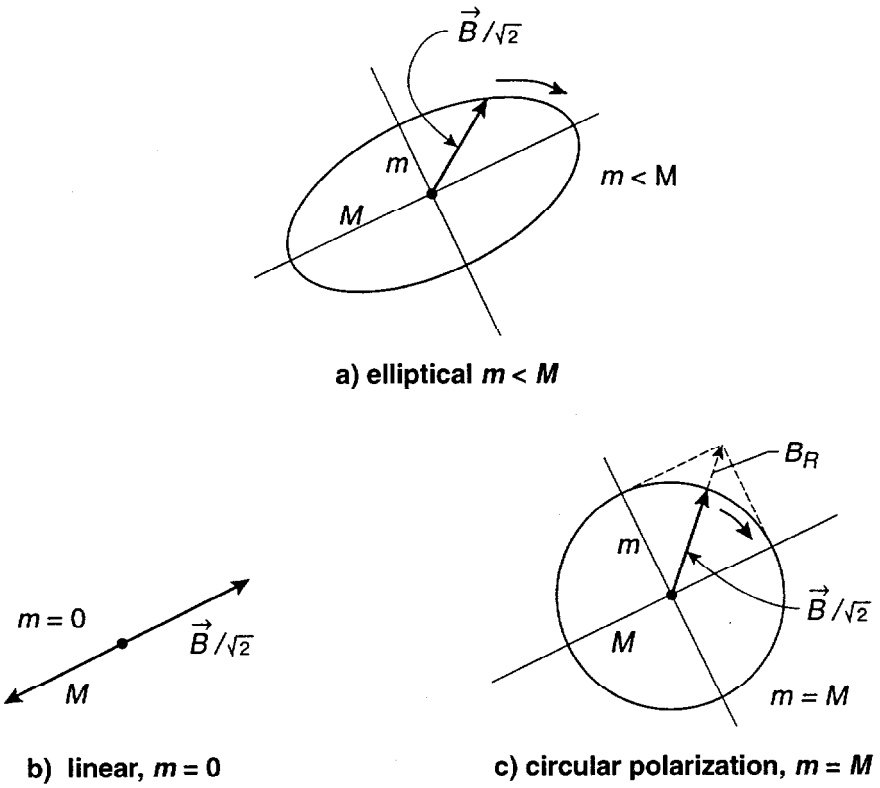

Figure 1 — Oscillating and rotating magnetic field vectors

Oscillating and rotating magnetic field vectors that have been reduced in magnitude, i.e., divided by, at any instant for the cases of a) elliptical $m < M$, b) linear $m = 0$, and c) circular polarization $m = M$. The resultant, B_R, and the maximum magnetic field, M, are equal only for the case of linear polarization. The largest difference between the resultant and maximum magnetic field occurs for circular polarization, i.e., B_R exceeds M by 41%.

Other commonly encountered sources of magnetic fields are straight conductors (e.g., home wiring and grounding systems/electrodes) and approximately circular turns of wire (e.g., found in transformers, motors, video display terminals) with single phase currents. The magnetic field lines and vectors at representative points from such sources are shown schematically in figures 2 a) and 2b). The magnetic fields are linearly polarized and the time-dependence of the oscillating vectors depends on the waveform of the currents. Sinusoidal currents produce sinusoidal magnetic fields free of harmonics and nonsinusoidal currents (e.g., the sawtooth wave forms from television deflection coils) produce non-sinusoidal magnetic fields that can be rich in harmonics [B13]. The magnitudes of magnetic fields produced by currents in a straight wire and a circular loop of wire decrease as $1/r$ [B9] and $1/r^3$ [B35], respectively, where r is the distance from the field source (in the latter case it is assumed that r is much greater than the radius of the circular loop of wire).

Copyright The Institute of Electrical and Electronics Engineers, Inc.
Provided by IHS under license with IEEE
No reproduction or networking permitted without license from IHS
Not for Resale

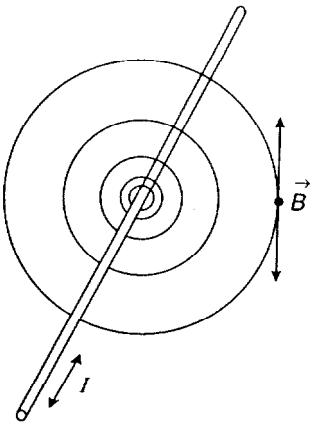

a) Straight conductor

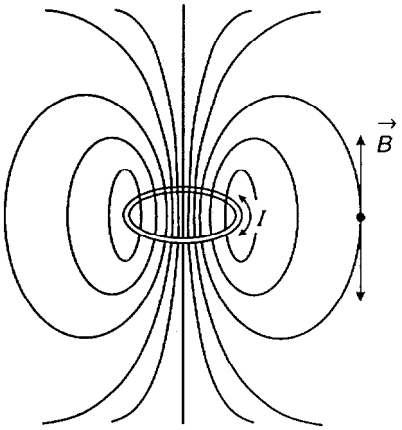

b) Circular conductor

Figure 2 — Magnetic field from current in conductors

5. Magnetic flux density meters (magnetic field meters)

5.1 General characteristics of magnetic field meters

Magnetic field meters consist of two parts—the probe or field sensing element, and the detector—which processes the signal from the probe and indicates the rms value of the magnetic field with an analogue or digital display. Magnetic field probes, consisting of an electrically shielded coil of wire (i.e., a "single-axis" probe), have been used in combination with a voltmeter as the detector for survey type measurements of power frequency magnetic fields from power lines [B15]. A diagram of this kind of instrumentation, which is one example of a survey meter, is shown in figure 3. While not indicated in figure 3, components of the detector are sometimes incorporated with the probe. Magnetic field meters measure the component of the oscillating (linearly polarized) or rotating (elliptically or circularly polarized) magnetic field vector that is perpendicular to the area of the probe(s). The direction normal to the area of the probe coincides with the sensitive axis of the probe.

Copyright The Institute of Electrical and Electronics Engineers, Inc.
Provided by IHS under license with IEEE
No reproduction or networking permitted without license from IHS
Not for Resale

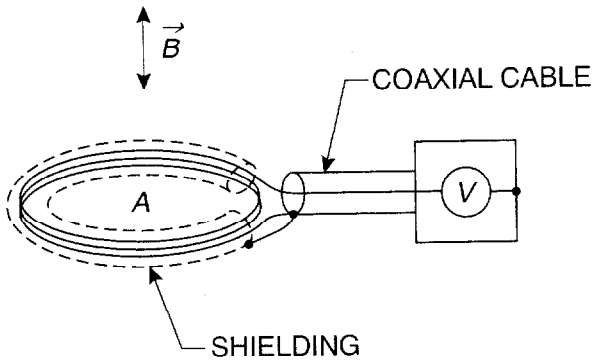

Figure 3 — Schematic view of simple magnetic field meter with coil-type probe

For measurements in environments where the harmonic components in the magnetic field may not be negligible (e.g., industrial and residential settings, transportation systems), a stage of integration (active or passive) is made part of the detector circuit in order to preserve the waveform of the magnetic field (see 5.2). Typically, no provision is made for storage of data, although output connectors for commercially available recorders are sometimes provided. To characterize the harmonic content in the magnetic field, the detector signal (which reflects the waveform of the magnetic field) can be examined using commercially available spectrum analyzers to obtain the amplitudes of the fundamental and harmonic components.

During survey-type measurements of the magnetic field, the probe can be held by hand without significant perturbation of the field due to the proximity of the observer. Proximity effects of nearby dielectrics are also insignificant. Proximity effects of small non-ferrous conductors are usually weak and localized to near the conductor surface, i.e., magnetic fields associated with eddy currents induced in the conductor by the time-variation of the magnetic field will perturb the field locally. Large non-ferrous metal structures can significantly perturb the field over an extended region, e.g., the interior of some mobile homes.

For long-term and/or more comprehensive measurement applications, the survey-type field meter can be replaced with instrumentation having three orthogonally oriented coil probes (i.e., a “three-axis” probe) for simultaneous, periodic measurements of the rms values of the three spatial field components. Such instrumentation have data storage systems that permit later analyses of the measurement results [B13], [B34]. In general, “vectorially” summing the rms values of the three orthogonal components [i.e., square root of the sum-of-squares; see equation (1)] will not yield the maximum magnetic field because of phase differences between the spatial components. However, an upper limit is provided by this summation [B14], which is defined as the resultant magnetic field, B_R. Assuming that there are no harmonics in the field, the greatest difference between the maximum magnetic field and the resultant magnetic field occurs when the magnetic field is circularly polarized, and amounts to 41%, i.e., B_R exceeds the maximum magnetic field by this amount [see equation (2) and figure 1].

It should be noted that B_R is also equal to the rms total magnetic flux density [B17], regardless of the phases of the orthogonal components. One consequence of the phase independence is that B_R is not unique in the sense that the same resultant magnetic field can be produced by magnetic fields with different geometries, e.g., a linearly polarized magnetic field with orthogonal components $B_o \sin\omega t$ and $B_o \sin\omega t$, and a circularly polarized magnetic field with orthogonal components $B_o \sin\omega t$ and $B_o \cos\omega t$ will have the same resultant, B_o.

Single-axis meters can be used to measure the maximum magnetic field by orienting the probe until a maximum reading is obtained. Single-axis meters can also be used to determine the resultant magnetic field by measuring the rms values of three orthogonal spatial components and combining them according to

Copyright The Institute of Electrical and Electronics Engineers, Inc.
Provided by IHS under license with IEEE
No reproduction or networking permitted without license from IHS
Not for Resale

equation (1). It is assumed that during this procedure there are no significant changes in the rms values of the spatial components.

The development in recent years of small magnetic field personal exposure meters, devices that can be worn to measure periodically and record the three (rms) spatial components of the magnetic field, has also led to the use of miniature coil probes, sometimes containing ferromagnetic cores for increased sensitivity [B13]. The orthogonally oriented probes in exposure meters, while in close proximity to one another, may not share a common central point, i.e., the probes are at different locations. Other types of field meters with high permeability inductor probes such as the fluxgate magnetometer [B30] have been adapted for ac and/or dc measurements.

Yet more sophisticated instrumentation is available that periodically records the magnetic field waveform of the three orthogonal field components at the same instant and thus contains magnitude, phase, and frequency information that is subsequently analyzed for degree of polarization, harmonics, etc. [B34].

Also available are magnetic field meters with Hall-effect probes that can be used to measure magnetic flux densities from dc to several hundred hertz. However, because of their low sensitivity and saturation problems due to the earth's field, they are not suited for low level ac field environments (e.g., in the vicinity of power lines and in residences), and therefore are not considered in this standard (see annex A).

5.2 Theory of operation (coil probes)

The principle of operation of the magnetic field meter shown in figure 3 is based on Faraday's law that predicts that a voltage, *V,* is produced at the ends of an open loop of wire placed in a changing magnetic field. Specifically, the voltage is equal to the negative of the time-rate-of-change of the flux, ϕ, through the loop

$$V = \frac{d\phi}{dt} = -\frac{d}{dt}\left[\int_A \boldsymbol{B} \cdot \boldsymbol{n} dA\right], \tag{4}$$

where

B is the magnetic flux density in units of tesla
n is a unit vector perpendicular to the area of the loop, A in m^2,
dA is an element of area of the loop.

If the magnetic field is free of harmonics, e.g., $B = B_o \sin\omega t$, and perpendicular to the area of the probe, then

$$V = -\omega B_0 A \cos\omega t \tag{5}$$

where

ω, the angular frequency, is equal to 2πtimes the frequency.

For *N* turns of wire in the loop, the voltage given by equation (5) will develop across each turn and the total voltage will be $-N\omega B_0 A\cos\omega t$. Equation (5) shows that the sensitivity increases with the area of the probe.

If there are harmonics in the magnetic field, there will be an additional term on the right side of equation (5) for each harmonic. Because of the differentiation operation [see equation (4)], each of the additional terms will be weighted by the associated harmonic number. For example, if there were 10% third harmonic in the field, the term, $-3(0.1)\omega B_o A\cos 3\omega t$, would be added to the right side of equation (5). Because of the weighting of the harmonic term, the waveform of the signal will no longer reflect the waveform of the field. Consequently, the rms value indicated by the voltmeter-detector (see figure 3) will not accurately represent

Copyright The Institute of Electrical and Electronics Engineers, Inc.
Provided by IHS under license with IEEE
No reproduction or networking permitted without license from IHS
Not for Resale

the rms value of the field. The waveform does reflect, to a good approximation, the time-variation of the voltage or current induced in conducting materials.

To recover the magnetic field waveform, it is necessary for the detector to perform the inverse mathematical operation, namely integration. This can be accomplished by introducing a stage of integration in the detector. (If the signal is digitized, the integration can be done by computation.) For example, the integration stage can be combined with the probe in the form of passive components, or an integrating operational amplifier can be incorporated into the detector. The frequency response of the probe-integrating detector combination should be made flat over the frequency range of interest. Filters and adequate electric field shielding should be part of the detector circuit design to exclude signals outside the frequency range of interest.

In addition to considering how the detector responds to fields with different frequencies, it is also necessary to consider the frequency response of the probe. Because of the inherent inductance, resistance, and capacitance of the probe, the relationship between the voltage induced in the coil, V [see equation (4)], and the voltage entering the detector, v_p, should be considered as a function of frequency. A simplified schematic view of the equivalent circuit for the coil probe is shown in figure 4 . The ratio, $|W|$, of probe voltage, v_p, to induced voltage, V, is given by [B1].

$$|W| = \left|\frac{v_p}{V}\right| = \left[\left[\frac{R+r}{R} - \omega^2 LC\right]^2 + \left[\omega\left(\frac{L}{R} + Cr\right)\right]^2\right]^{-1/2} \tag{6}$$

where

L and r	are the inductance and resistance of the coil and its leads
C	is the stray capacitance
R	is the approximate input impedance of the detector

The value of $|W|$ should remain close to unity and not peak before falling off with increasing frequency. High values of R can cause peaking near the resonance frequency of the probe followed by a rapid fall-off in $|W|$. Lower values of R permit the value of $|W|$ to roll off gently with increasing frequency. Too low a value, however, causes a more rapid roll off and an unnecessary reduction in the frequency response [B7].

The theory of operation for magnetic field meters with probes containing ferromagnetic cores is more complicated than the air core case because the permeability of the core material may vary with frequency and magnitude of the field. Discussions of magnetic field meters with probes containing ferromagnetic cores are given in [B13] and [B30].

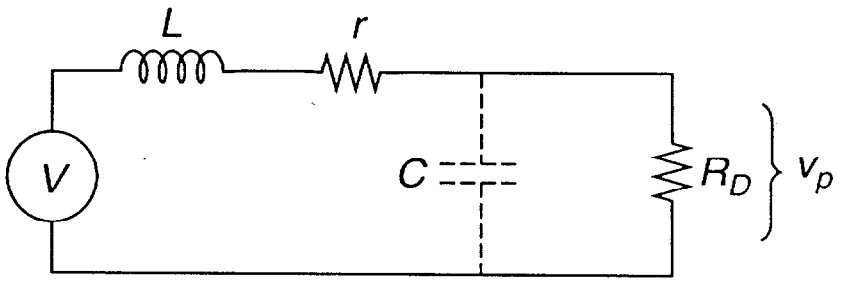

Figure 4 — Approximate equivalent circuit of a coil probe when connected to the detector

L, r, and C represent the coil inductance, wire resistance, and stray capacitance, respectively. The input impedance of the detector is represented approximately as a resistor R_D.

Copyright The Institute of Electrical and Electronics Engineers, Inc.
Provided by IHS under license with IEEE
No reproduction or networking permitted without license from IHS Not for Resale

5.3 Calibration methods for magnetic field meters

Calibration of a magnetic field meter is normally done by introducing the probe into a nearly uniform magnetic field of known magnitude and direction. Known magnetic fields can be produced by coil systems with circular and rectangular geometries [B2], [B6], [B19], [B31], [B38]. For example, Helmholtz coils have frequently been employed to generate such fields. A single loop of many turns of wire with rectangular geometry for producing the field is described below because the equations for calculating the field at all points in space are in closed form [B20], [B38] and the coil system is simple to construct. The simplicity in construction is at the expense of reduced field uniformity, but sufficient uniformity for calibration purposes is readily obtained.

The z-component of the magnetic field produced by a rectangular loop $2a \times 2b$ at a point in space, *P(x,y,z)*, is given by the following expression [B20], [B38]:

$$B_z = \frac{\mu_0 IN}{4\pi} \sum_{\alpha=1}^{4} \left[\frac{(-1)^{\alpha} d_{\alpha}}{r_{\alpha}[r_{\alpha} + (-1)^{\alpha+1} C_{\alpha}]} - \frac{C_{\alpha}}{r_{\alpha}(r_{\alpha} + d_{\alpha})} \right] \tag{7}$$

where

N= number of turns

$C_1 = -C_4 = a + x$ $\quad r_1 = [(a+x)^2 + (b+y)^2 + z^2]^{1/2}$

$C_2 = -C_3 = a - x$ $\quad r_2 = [(a-x)^2 + (b+y)^2 + z^2]^{1/2}$

$d_1 = d_2 = b + y$ $\quad r_3 = [(a-x)^2 + (b-y)^2 + z^2]^{1/2}$

$d_3 = d_4 = y - b$ $\quad r_4 = [(a+x)^2 + (b-y)^2 + z^2]^{1/2}$

I is the rms current in amperes.

$\mu_o$is the permeability of air.

x, y, and *z* are the coordinates (in meters) shown in figure 5.

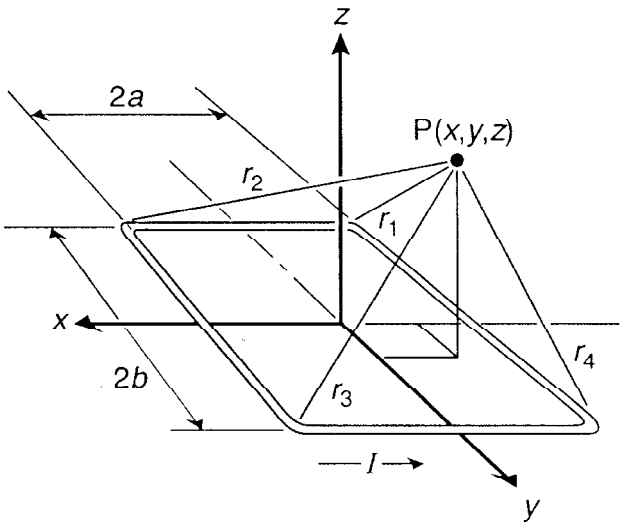

Figure 5 — Coordinate system and geometry of rectangular loop of many turns of wire for equation (7)

Copyright The Institute of Electrical and Electronics Engineers, Inc.
Provided by IHS under license with IEEE
No reproduction or networking permitted without license from IHS
Not for Resale

The conductors in the current loop are assumed to be of negligible cross section. It is noted for purposes of reference that

$$B_z = \frac{\mu_o IN\sqrt{2}}{\pi a} \tag{8}$$

at the center of a square loop of side dimension $2a$. Equation (7) has been used to calculate the field values at and near the center of a square loop of dimensions 1 m × 1 m. The percent departure from the central magnetic field value at nearby points in the plane of the loop and at 3 cm above and below the plane of the loop (in parenthesis) are plotted in figure 6. Also shown in figure 6 is a scale drawing of a magnetic field probe 10 cm in diameter. The departure of the magnetic field from the central value over the cross sectional area of the 10 cm probe is less than 1%.

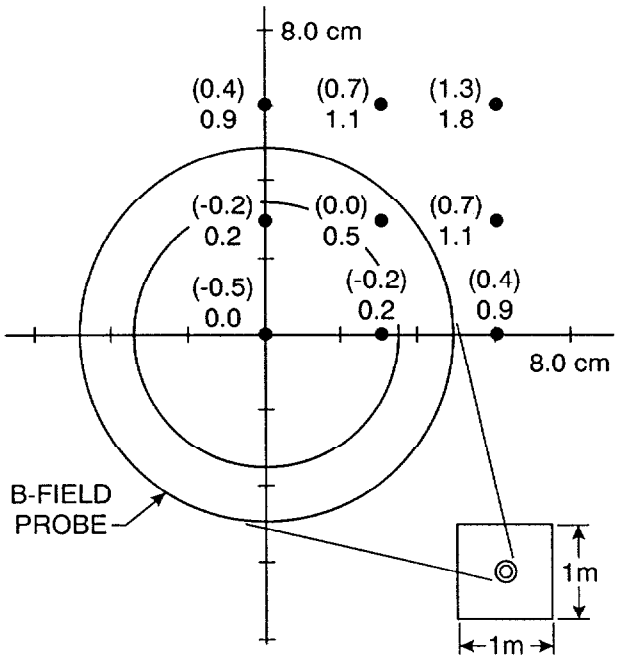

Figure 6 — Percentage departure of calculated B z from central value

Differences in percent of B_z from central value for positions in the plane of a square loop 1 m × 1 m, and 3 cm above or below the plane (parentheses). A scale drawing of a coil-type probe 10 cm in diameter is outlined.

It is noteworthy that a field meter with a coil probe will indicate a magnetic field value that is an average over the cross sectional area of the probe. The difference between this average and the central value [see equation (8)] will be less than the maximum percent departure from the central value. For example, while the largest departure of the magnetic field from the central value is 0.63% for the 10 cm probe (in the plane of the loop), the average field is only 0.31% more than the central (calibration field) value.

By varying the frequency of the current through the loop, the frequency response of the field meter can be determined for the frequency range of interest. For a nearly constant $|W|$ [see equation (6)] and a suitably designed detector with a stage of integration, a field meter with an air core probe should indicate a nearly constant rms value as the frequency is varied. A similar result should be obtained with a coil probe that has a core of soft ferromagnetic material, if the change in permeability as a function of frequency is negligible.

Copyright The Institute of Electrical and Electronics Engineers, Inc.
Provided by IHS under license with IEEE
No reproduction or networking permitted without license from IHS
Not for Resale

NOTE—While a flat frequency response may be observed with both an average sensing rms detector and a true rms detector, the response of the average sensing rms detector to a complex magnetic field waveform, consisting of the fundamental and one or more harmonics, may still be in error (see 3.2).

Calibration of the higher scales of a magnetic field meter, i.e., ≥ 10 μT, normally can be performed with a field generated by a coil system because background fields that are typically 0.1 μT or less, make a negligible contribution to the calibration field. However, the presence of significant background fields will prevent calibration of the more sensitive scales because of their perturbing effects on the calibration field. An alternative procedure for calibrating the sensitive scales is to use a voltage injection technique [B7]. Using this procedure, the volts/tesla produced by a coil probe (when connected to the detector circuit) can be determined at each frequency of interest using a voltmeter connected to the input of the detector and a magnetic field that is at least two orders of magnitude larger than the background field. Voltages that correspond to smaller magnetic fields are then injected into the detector circuit (with the probe disconnected) to calibrate the more sensitive scales of the magnetic field meter. A voltage divider with a well known ratio when connected to the detector, an ac voltage source (e.g., a function generator), an accurate voltmeter, and adequate electric field shielding can be used to inject the known voltages for the frequency range of interest [B7]. The frequency dependence of the voltage divider ratio also should be known in order to carry out the calibration. Figure 7 shows a schematic view of a voltage injection circuit connected to the detector. In general, the voltage injection approach may not be applicable to probes with ferromagnetic cores because the permeability of the core may vary with magnetic flux density and affect the probe sensitivity. It should be noted that the voltage injection technique can also be used as a means for checking the calibration of all ranges of the magnetic field meter.

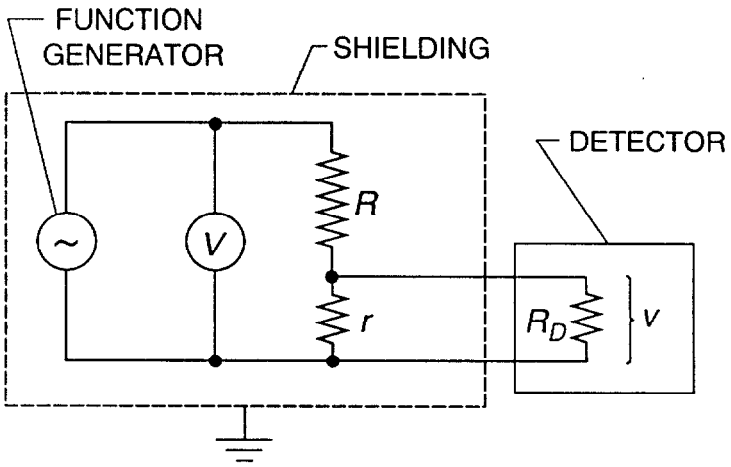

Figure 7 — Diagram for voltage injection technique

The voltage,*V,* from a function generator is reduced for injection purposes using a resistive divider. The injected voltage, *v,* is given by *Vr/(R + r)* in the absence of frequency effects on the divider ratio. *R* and *r* are resistors with *R* typically much larger than *r*. The input impedance of the detector is approximated as a resistance *R D*. The relation r << *R D* must be satisfied to avoid significantly affecting the value of the divider ratio.

5.4 Sources of measurement uncertainty

Once a valid calibration of a magnetic field meter has been performed, the number of mechanisms that can cause measurement errors is small. As noted in 5.1, the coil probe and detector must have adequate electrical shielding (e.g., against power frequency and radio frequency electric fields), but observer proximity effects are negligible.

NOTE—This recommended practice does not consider uncertainties associated with temporal and spatial variations of the magnetic and electric fields. Characterization of temporal variations of magnetic fields can be obtained using meters

Copyright The Institute of Electrical and Electronics Engineers, Inc.
Provided by IHS under license with IEEE
No reproduction or networking permitted without license from IHS
Not for Resale

designed to record field values over extended periods. Spatial variation measurements require the recording of magnetic field components as a function of coordinate position. For example, instrumentation incorporating "measurement wheels" is available for characterizing spatial distributions of magnetic fields in some environments. In many instances, the temporal or spatial variation can far exceed uncertainties associated with field meter calibration, e.g., because of changes in load currents on power distribution lines, the temporal variation of magnetic fields in residences can change by several hundred percent [B13]. A mechanism that can produce short-term temporal variations of the magnetic field is the movement of ferromagnetic objects, e.g., automobiles and trucks past the measurement location.

Possibly the greatest uncertainties occur when measurements are made manually of highly nonuniform magnetic fields close to such sources as appliances. Uncertainties in the orientation of the probe (e.g., when measuring the maximum magnetic field with a single-axis probe) and the distance between the source and probe can lead to measurement results that differ by more than 100% [B12]. In addition, the magnetic field meter probe is normally calibrated in a nearly uniform magnetic field and is used to measure a field that can vary as $(\text{distance})^{-3}$ (see clause 4). While the center of the probe is usually considered the measurement location, the magnetic field reading actually is an average of the normal component of the magnetic field over the cross sectional area of the probe. In some cases, the average field can differ significantly from the central field value. Finally, as the probe is rotated in a highly nonuniform field, the readings can depart significantly from the cosine law. This departure from the cosine law can affect field measurements with single- and three-axis probes.

Uncertainties related to positioning the magnetic field probe more precisely with well defined orientations can be reduced with the use of adjustable stands fabricated with non-magnetic materials. The relationship between the magnetic field at the center of a circular coil probe and the average magnetic flux density can be calculated as a function of the ratio of distance, r, from the magnetic field source and probe radius a. Table 1 shows as a function of r/a the largest calculated difference between the magnetic field at a point near an appliance, in percent, and the average magnetic field value determined by rotating a single-axis probe at the same point until a maximum reading, ΔB_{max1}, is obtained [B26]. A dipole magnetic field is assumed for the calculations because to a good approximation its geometry simulates the geometry of many electrical appliances and equipment [B22]. In general, the magnetic dipole axis will have an unknown orientation during a measurement situation. Therefore, the calculations and results in [B26] considered different orientations of the magnetic dipole for a fixed ratio of r/a, until the largest difference between the magnetic field at the probe's center and the maximum average magnetic field was determined. The dipole approximation assumes a $(\text{distance})^{-3}$ dependence of the magnetic field, which may not be exactly true close to some appliances. The minus sign in table 1 indicates that the maximum measurement will be less than the magnetic field value at the center of the probe.

Table 1 also shows as a function of r/a the differences that are possible, in percent, between the magnetic field value at the center of a three-axis probe (with a common central point) and the resultant magnetic field (see 3.16) obtained by "vectorially" summing the average (rms) magnetic field values from three orthogonally oriented circular coil probes, ΔB_{max3} [B26]. The values of ΔB_{max3} are the largest differences calculated following arbitrary rotations of the three-axis probe and for different orientations of the magnetic dipole [B26].

The information in table 1 should be considered when taking into account the various sources of measurement uncertainty. For example, if the maximum magnetic field at a distance r from an appliance is to be measured with a single-axis probe having a radius a such that $r/a = 5$, the maximum measured field could be too low by as much as 5.7% because the orientation of the magnetic dipole is typically unknown. While this uncertainty cannot be used to correct measurements, it can be combined with other sources such as calibration, bandwidth, etc. (see paragraph below).

Copyright The Institute of Electrical and Electronics Engineers, Inc.
Provided by IHS under license with IEEE
No reproduction or networking permitted without license from IHS
Not for Resale

Table 1 — Values of ΔB_{max1}(single-axis probe) and ΔB_{max3}(three-axis probe) as a function of normalized distance r/a from the magnetic dipole

r/a	ΔB_{max1}(%)	ΔB_{max3}(%)
3	–14.6	–19.6
4	–8.7	–10.8
5	–5.7	–6.9
6	–4.0	–4.8
7	–3.0	–3.5
8	–2.3	–2.7
9	–1.8	–2.1
10	–1.5	–1.7
11	–1.2	–1.4
12	–1.0	–1.2
13	–0.9	–1.0
14	–0.8	–0.9
15	–0.7	–0.8

The information in table 1 for three-axis field meters cannot be used to correct readings because the orientations of the magnetic dipole and three-axis probe also are not known in most measurement situations. Thus, the entries for ΔB_{max3} in table 1 can be regarded as the largest measurement errors as a function of *r/a* because of averaging effects of the three coil probes. The values of ΔB_{max3} should be considered when determining total measurement uncertainty. For example, if the resultant magnetic field is to be measured at a distance *r* from an appliance with an uncertainty of less than 10%, magnetic field meters with three-axis probes having radii a such that $r/a = 3$ should be considered unsuitable. Three-axis probes having radii such that $r/a = 5$ would conservatively be considered suitable if the combined uncertainty from other sources amounted to 3% or less, i.e., 6.9 + 3.0 = 9.9, where 6.9 is taken from table 1 for $r/a = 5$.

Three-axis meters that have probes in close proximity but at different locations can be expected to exhibit some error in highly nonuniform fields. In addition, if the coil probes have ferromagnetic cores for enhanced sensitivity, some compromise may be necessary in the placement of the three orthogonally oriented probes. If the probes are too close, the proximity of the ferromagnetic cores can perturb the magnetic field and the axial field sensed by each probe. If the probes are placed far apart to reduce the proximity effect of the ferromagnetic cores, some error can occur in highly nonuniform fields as noted in the first sentence of this paragraph.

Another source of uncertainty occurs if batteries that drive the detector circuit are in close proximity to coil probes as is possible in the small confines of exposure meters. Metal jackets for batteries may be ferromagnetic and possibly distort the magnetic field sensed by the probes. For example, if the field meter is calibrated with batteries that have ferromagnetic casings, the calibration could be invalidated if batteries with nonmagnetic casings were used at a later time.

Copyright The Institute of Electrical and Electronics Engineers, Inc.
Provided by IHS under license with IEEE
No reproduction or networking permitted without license from IHS
Not for Resale

Electrical noise in the detector circuit can create a “noise floor” that prevents accurate magnetic field measurements at lower field levels. The noise floor can be estimated by performing measurements far from magnetic field sources (e.g., middle of an open field).

Limited bandwidth can contribute to measurement uncertainty and lead to differences in measurement results. For example, measurements of magnetic fields from some video display terminals (VDTs) using a 60-Hz field meter (i.e., a field meter with a narrow pass band centered about 60 Hz) can differ by more than 20% compared with field meters with broader pass bands [B13]. This occurs because the VDT magnetic field is rich in harmonics that cannot be detected with a 60-Hz meter. If the magnetic field contains no power frequency component, the difference or error could be much larger (see also note in 5.5).

A final source of uncertainty that is considered is the influence of temperature on the operation of the field meter. If extreme differences in temperature are anticipated at a measurement site compared to the temperature at the time of calibration, the effects of temperature should be known or characterized. The influence of temperature can be determined using the voltage injection technique while the field meter is in an environmental chamber. By observing the field meter response as a function of temperature under conditions of constant voltage injection, the temperature dependence can be quantified.

5.5 Calibration procedure and specifications for magnetic field meters

The magnetic field meter should be calibrated periodically at intervals dependent in part on the stability of the meter. For calibration of the higher ranges, the magnetic field probe should be placed in the center of a single loop (of many turns) with the plane of the probe coincident with that of the loop. Figure 8 shows a schematic view of the probe, loop, and associated circuit. The loop dimension should be at least 1 m × 1 m for a probe with a 10 cm diameter. The loop may be scaled upwards or downwards for larger or smaller probes, respectively, to maintain a level of uniformity across the probe comparable to that shown in figure 8. It is noted with emphasis that the calibration field may be generated with other loop systems provided that comparable uniformities can be obtained. Information on fields generated by rectangular, square, and circular loop systems (including Helmholtz coils) is given in [B6], [B19], [B31], and [B38].

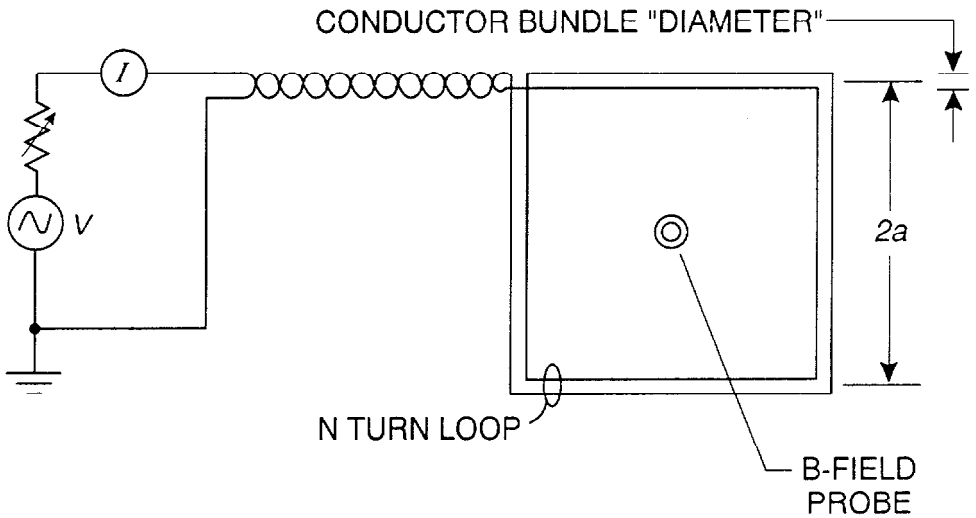

Figure 8 — Schematic view of circuit for calibration of magnetic field meter using a square loop to produce a known field

Copyright The Institute of Electrical and Electronics Engineers, Inc.
Provided by IHS under license with IEEE
No reproduction or networking permitted without license from IHS
Not for Resale

The resonant frequency of the calibration loop should be sufficiently greater than the calibration frequencies so that calibrations are not affected by the resonance phenomenon. To avoid significant perturbations of the calibration field by image current loops, the calibration loop should be no closer than two side dimensions away from any ground plane.

Perturbations of the calibration field can occur because of ferromagnetic materials in close proximity to the calibration loop. For example, large permeability materials such as steel in a nearby cabinet or desk, or a bracket under a table will concentrate the magnetic flux and may perturb the value of the calculated field in the calibration loop. The influence of nearby ferromagnetic materials on the calibration field should be checked using a trial and error approach, e.g., the influence of a nearby relay rack on the magnetic field could be examined as a function of distance from the calibration coil.

Calibrations of single-axis probes and each axis of three-axis probes should be performed with sinusoidal magnetic fields or their equivalent voltages (voltage injection technique) at the levels and frequencies that are relevant for the measurement environment of interest. During calibration of each axis of three-axis probes, a check should be made for crosstalk (see 3.4) between the detector circuitry for each probe. If present, crosstalk should be made negligible and/or considered when determining total measurement uncertainty (see 5.6). Magnetic field meters with three-axis probes should also be calibrated for one orientation (at one frequency and field level) where approximately the same flux passes through all the coils.

For representative frequencies in the frequency range of interest, a plot of the calculated magnetic field values in the center of the loop [see equation (8)] vs. the applied current (or voltage for voltage injection technique) should be made as shown in figure 9. The uncertainty in the calculated magnetic field should be indicated at a representative point with a vertical error bar. This error bar is due to uncertainties in the measured current, I, the side dimension, $2a$ of the calibration loop, and the effect of nonuniformity of the magnetic field (< 0.5% for 10 cm probe), when calibrations are performed with the calibration loop.

NOTE—Uncertainty in the side dimension of the square loop, $2a$, can be due to a non-negligible conductor bundle cross section. For this case, the side dimension may be taken to be the distance between the centers of the conductor bundles with an uncertainty equal to ± the conductor bundle "diameter" (see figure 8). The combined uncertainty is given by the square root of the sum-of-the-squares. For example, if uncertainties in the determination of I and a are ±0.2% and ±1.0%, respectively, the combined uncertainty in the value of the calibration field for the 10 cm diameter probe is $\pm[(0.2)^2+(1.0)2+(0.5)^2]^{1/2}$ or ± 1.1%.

If calibrations are performed using the voltage injection technique, the error bar is due to uncertainties in the volts/tesla ratio (related to I and $2a$) and the voltage being injected. A region of acceptable field meter readings should also be indicated on the plot as shown in figure 9 (the vertical bar representing the uncertainty associated with the calculated magnetic field should be contained in this region). Measured values obtained with the field meter that is being calibrated should also be plotted. Field meters with readings that are outside the shaded region in figure 9 should be considered inaccurate. At least three magnetic field levels for each range of the field meter, sufficient to span 30% to 90% of full scale, should be recorded for meters with analog displays. At least four points, sufficient to span 10% to 90% of full scale, should be obtained with field meters with digital displays. Field meters with autoranging capabilities should be calibrated on each range at no less than three representative points which span most of the range. On the most sensitive range, one of the calibration points should be 10% of the maximum value for that range. On the least sensitive scale, one of the calibration points should be 90% of the maximum value for that range. To meet these requirements, the signal from the probe should be amplified, integrated, and filtered with appropriate high-pass and low-pass filters as needed.

Copyright The Institute of Electrical and Electronics Engineers, Inc.
Provided by IHS under license with IEEE
No reproduction or networking permitted without license from IHS
Not for Resale

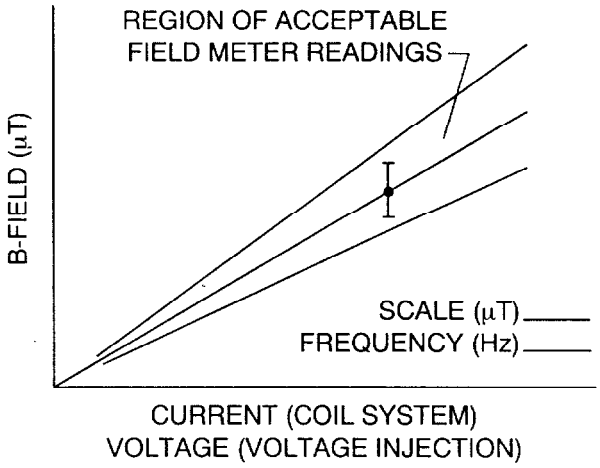

The calibration field (ordinate) is calculated using equation (8) or from using the voltage injection technique (see 5.3).

Figure 9 — Diagram for calibration of magnetic field meters

What may be considered as an acceptable region of field meter readings and an acceptable uncertainty in the calculated magnetic field is left to standards that describe measurement protocols for specific measurement environments (see note in 1.1). The recorded field values permit the determination of correction factors that should be applied to field meter readings when measurements are performed in the environment of interest. The uncertainty associated with the above calibration process is equal to the uncertainty of the calculated magnetic field once the correction factors have been applied to the field meter readings.

It is desirable to perform calibration checks of field meters using the voltage injection technique at the same time the meter is calibrated in a known field. This practice would allow calibration checks to be substituted for calibrations with magnetic fields produced by coil systems when coil systems are not available.

The noise floor (see 5.4) should be determined for each scale that is being calibrated. If significant in magnitude, it should be reduced or combined with other sources of uncertainty (see 5.6). This should be done for single-axis field meters and each axis of three-axis field meters.

Calibration checks or calibrations should be performed prior to and after any extended periods of field meter use, e.g., if measurements are performed over a period of several days to a week. This practice is particularly important when there are logistical difficulties in returning to the measurement location at a later time.

Energizing power supplies used for the calibration loop should be nearly free (<1%) of harmonic content.

The following field meter specifications should be provided (see also clause 7):

Dynamic range and measurement uncertainty. Indication of the range of minimum to maximum field levels that can be measured within specified uncertainties.

Frequency response or pass band. Indication, in percent or decibels, of the maximum departure of the field measurement from actual value as a function of frequency. This information may be presented with figures and/or text.

Other specifications that should be provided are field meter (including probe) dimensions, weight, operating temperatures, and power requirements.

Copyright The Institute of Electrical and Electronics Engineers, Inc.
Provided by IHS under license with IEEE
No reproduction or networking permitted without license from IHS Not for Resale

The filter characteristics may be described in terms of the high pass corner frequency, high-pass characteristic, low-pass corner frequency, etc. Specifications may be required, in some cases, on pass band ripple, e.g., Chebyshev filters.

NOTE—To minimize signals from the probe due to motion of the probe in the earth's magnetic field, the high-pass corner frequency can be increased, provided that the higher frequency does not compromise the measurements, e.g., measurements of 25-Hz magnetic fields from some electric trains.

5.6 Measurement uncertainty

In order to determine the total uncertainty associated with rms measurements of the magnetic flux density in different measurement environments, there should be an appropriate accounting of the various sources of uncertainty. Possible sources of uncertainty that have been identified in the previous clauses are the following:

a) Calibration uncertainty
b) Averaging effects of coil probes during nonuniform field measurements (see table 1)
c) Errors in positioning the probe in nonuniform fields
d) Frequency response or band pass limitations
e) Inadequate electric field shielding
f) The noise floor
g) Crosstalk
h) Temperature

Some sources of uncertainty can be reduced to negligible levels. For example, proper shielding can reduce susceptibility to 60-Hz electric fields and electromagnetic interference to negligible levels [B12].

NOTE—There can be extreme measurement environments for which adequate shielding against electromagnetic interference will be difficult, e.g., near very high-frequency (vhf) and ultra-high frequency (uhf) broadcast facilities.

Similarly, stands fabricated from insulating materials can be used for precise positioning of the field meter probe in highly nonuniform fields. The combined uncertainty of the significant sources of uncertainty should be taken as the square root of the sum-of-the-squares.

Some judgment is called for in performing this calculation. If, for example, a magnetic field contains harmonics, the true rms value of the magnetic field is given by

$$B = B_f\sqrt{1 + \alpha_1^2 + \alpha_2^2 + \alpha_3^2 + ...} \tag{9}$$

where

B_f is the rms value of the fundamental field component
α_i is the fraction of the ith harmonic

If the harmonics decrease in amplitude at higher frequencies and the bandwidth of the field meter is inadequate to give full value to the higher harmonics, the true rms value of the magnetic field still may not be greatly affected by the limited frequency response because of the summation given in equation (9).

Similarly, it should also be recognized that uncertainties during the measurement of magnetic fields from appliances or other electrical equipment, as a function of distance from the source can become very great (e.g., exceeding 100%) as the field level from the source approaches the value of the background magnetic field. For this case, the uncertainty should include an additional term, "%background," where %background is equal to (background field/measured field) × 100%.

--`,,`-`-`,,`,,`,`,,`---

Copyright The Institute of Electrical and Electronics Engineers, Inc.
Provided by IHS under license with IEEE
No reproduction or networking permitted without license from IHS
Not for Resale

6. Electric field strength meters (electric field meters)

6.1 General characteristics of electric field meters

Electric field strength meters consist of two parts—the probe or field sensing element and the detector—which processes the signal from the probe and indicates the rms value of the electric field strength in units of V/m using an analogue or digital display. The following three types of electric field meters are considered in this standard:

a) The free-body meter
b) The ground reference meter
c) The electro-optic meter.

When measurements of the electric field strength are performed, the observer must be sufficiently removed from the probe to avoid significant perturbation of the field at the location of the probe (see 6.4). Free-body and electro-optic type meters should be sufficiently small so that the size of the probe does not significantly perturb the charge distributions on boundary surfaces generating the electric field, i.e., energized and grounded surfaces. Although field meters are calibrated in nearly uniform electric fields, the field that is measured need not be very uniform (see 6.4). Electric field meters measure the projection of the oscillating (linearly polarized) or rotating (elliptically or circularly polarized) electric field vector onto the electrical axis of the probe (the axis of greatest electric field sensitivity). Electric field meters that simultaneously measure more than one component of the electric field are not considered in this recommended practice.

6.2 Theory of operation

6.2.1 Free-body meters

Free-body meters determine the electric field strength by measuring the steady state induced current or charge oscillating between the conducting halves (electrodes) of an electrically isolated probe after the probe has been introduced into the electric field. For commercially available free-body meters, the detector is usually contained in or is an integral part of the probe. The probe and detector are supported in the electric field at the end of a horizontal insulating handle [B11], [B15]. The free-body meter is suitable for survey type measurements because it is portable, allows measurements above the ground plane, and does not require a ground reference potential. Free-body meters are normally battery powered.

There also exist free-body meters designed for remote display of the electric field strength. For this case, a portion of the signal processing circuit is contained in the probe and the remainder of the detector is in a separate enclosure with an analog or digital display. A fiber optic link connects the probe to the display unit [B8], [B18].

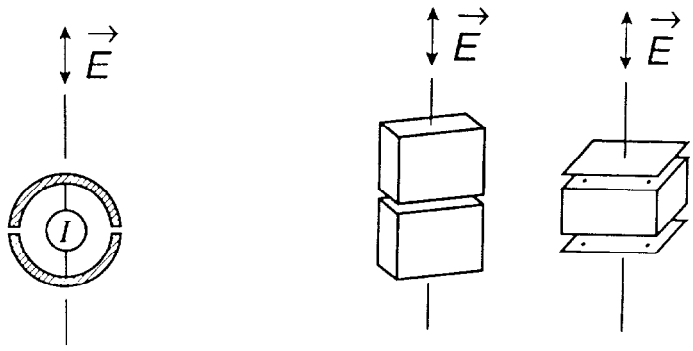

a) Spherical probe b) Commercial U.S. probes

Figure 10 — Geometries of E-field probes

Copyright The Institute of Electrical and Electronics Engineers, Inc.
Provided by IHS under license with IEEE
No reproduction or networking permitted without license from IHS Not for Resale

Figure 10 shows examples of free-body meter geometries. The theory of operation of free-body meters can be understood by considering an uncharged conducting body with separated halves or electrodes introduced into a uniform electric field *E*. The charge induced on one of the electrodes is

$$Q = \int_{S/2} \boldsymbol{D} \cdot \boldsymbol{n} dA \tag{10}$$

where

the electric displacement D is equal to $\in_o E$
$\in_o$ is the permittivity of free space
n is a unit vector perpendicular to the surface of the electrode
$d\,\mathbf{A}$ is an element of area on half of the body with total surface S

The case of spherical geometry [see figure 10 a)] yields the result

$$Q = 3\pi a^2 \varepsilon_o E \tag{11}$$

where

a is the radius of the sphere [B33].

NOTE—The surface charge density is given by $3\in o\ E \cos\theta$. Integration over the hemisphere gives equation (11) (see [B33]).

For less symmetric geometries, the result can be expressed as

$$Q = k\varepsilon_o E \tag{12}$$

where

k is a constant dependent on the probe's geometry.

Sensing electrodes resembling cubes and parallel plates [figure 10 (b)] have been employed. If the electric field strength has a sinusoidal time dependence, for example $E_o \sin\omega t$ where ω is the angular frequency, the induced charge oscillates between the two halves and the current is given by

$$I = \frac{dQ}{dt} = k\omega\varepsilon_o E_o \cos\omega t \tag{13}$$

The constant k can be thought of as a field meter constant and is determined by calibration. The influence of the handle, representing a leakage impedance, and the perturbation introduced by the observer are taken to be negligible in the above discussion.

If there are harmonics in the electric field, there will be an additional term on the right side of equation (13) for each harmonic. Because of the differentiation operation in equation (13), each of the additional terms will be weighted by the associated harmonic number. As for the magnetic field meter case (see 5.2), it is necessary for the detector to perform the inverse mathematical operation, namely integration, to recover the electric field waveform. This is accomplished by introducing a stage of integration. For example, an integrating amplifier or a passive integrating circuit combined with a voltmeter could be used as a detector. The frequency response of the probe-integrating detector combination should be made flat over the frequency range of interest. Filters should be used to exclude signals outside of the frequency range of interest.

Copyright The Institute of Electrical and Electronics Engineers, Inc.
Provided by IHS under license with IEEE
No reproduction or networking permitted without license from IHS
Not for Resale

6.2.2 Ground reference meters

Ground reference meters determine the electric field strength by measuring the current or charge on the sensing surface of a flat probe. Such meters are normally used to measure the electric field at ground level or on flat conducting surfaces that are at ground potential. Two probe designs have been employed. One design makes use of a single flat conductor with an isolated central section that serves as the sensing surface. Small versions of this type of probe have been made with double-clad printed circuit board as shown in figure 11 a). A second design consists of two parallel plates separated by a thin sheet of insulation, with the top plate acting as the sensing surface [figure 11 b)]. From Gauss' Law, the charge, Q, induced on a sensing surface with area A, is

$$Q = \varepsilon_o EA \tag{14}$$

where

E is the average electric field strength across the sensing surface
$\in$ is the permittivity of free space

Assuming that E varies sinusoidally with angular frequency ω, i.e., $E = E_o \sin\omega t$, the resulting induced current is given by

$$I = \frac{dQ}{dt} = \omega\varepsilon_o E_o A\cos\omega t \tag{15}$$

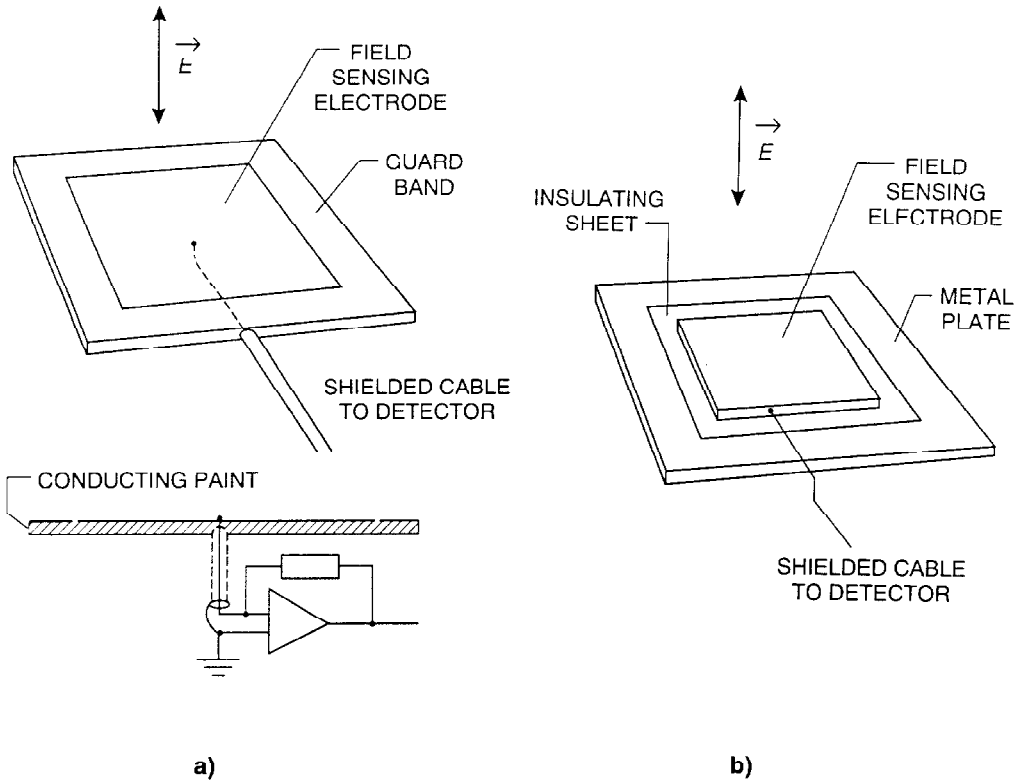

Figure 11 — Two designs for flat probes used with ground-referenced electric field meters

Copyright The Institute of Electrical and Electronics Engineers, Inc.
Provided by IHS under license with IEEE
No reproduction or networking permitted without license from IHS
Not for Resale

If there are harmonics in the electric field, there will be again an additional term on the right hand side of equation (15) for each harmonic. As in 6.2.1, because of the differentiation operation, each of the additional terms will be weighted by the associated harmonic number. To recover the electric field waveform, it is necessary to perform the inverse mathematical operation, namely integration. An integrating circuit/voltmeter combination that produces a flat frequency response over the frequency range of interest can serve as the detector. Filters also should be part of the detector circuit to exclude signals from outside of the frequency range of interest. Ground reference meters may be battery or mains operated.

Electric field meters with flat probes can be used to measure the electric field strength on flat electrically energized surfaces if the detector is operated at the same potential as the energized surface. In such cases, viewing of the analog or digital display of the detector must be done remotely, either visually from a distance or using a fiber optic link.

6.2.3 Electro-optic meters

The electro-optic field meter considered in this standard employs a probe that exhibits the Pockels effect when introduced into the electric field. This type of field meter is similar to the free-body meter in that it is suitable for survey type measurements, allows measurements at most points above the ground plane, and does not require a ground reference potential. The probe, which is separate from the detector, can be supported in the field with an insulating handle. The probe and detector are connected with optical fibers through which light from the detector is routed to and from the probe. In general, the probes are small in dimension (~2 cm) compared to free-body meter probes and this permits measurements closer to conducting surfaces because of the smaller interactions with the surface charge distributions. However, while smaller in size, Pockels effect probes have less sensitivity to electric fields (~5 kV/m and higher) compared to free-body meters (~1 V/m and higher) and are more expensive to fabricate.

Figure 12 shows a sketch of a Pockels effect probe and its constituent components. Light originating in the detector is sent to and from the probe via optical fibers. The electric field, *E,* induces a birefringence in an appropriately oriented dielectric (Pockels) crystal that causes the intensity of the linearly polarized light to be modulated according to the relation [B10]

$$\frac{I_t}{I_i} = \frac{[1 + \sin(E'/F)]}{2} \tag{16}$$

where

I_t is the transmitted light
I_i is the incident light
$E¢$ is the electric field in the crystal
F is equal to $\lambda/2\pi n^3 c_e l$
λ is the wavelength of light
n is the index of refraction
l is the crystal thickness
c_e is the electro-optic coefficient of the crystal

For equation (16) to hold, it is assumed that the crystal has no intrinsic optical activity.

Equation (16) shows that the amplitude of light modulation is a function of the electric field in the crystal that, in turn, is dependent on the external field *E*. Because the light transmission tracks the waveform of the electric field, a stage of integration is unnecessary in the detector to appropriately process signals due to harmonics that may be in the electric field. The Pockels crystal is sometimes coated with transparent electrodes to permit measurements of voltage using the Pockels effect. Electro-optic meters may be battery or mains operated.

Copyright The Institute of Electrical and Electronics Engineers, Inc.
Provided by IHS under license with IEEE
No reproduction or networking permitted without license from IHS
Not for Resale

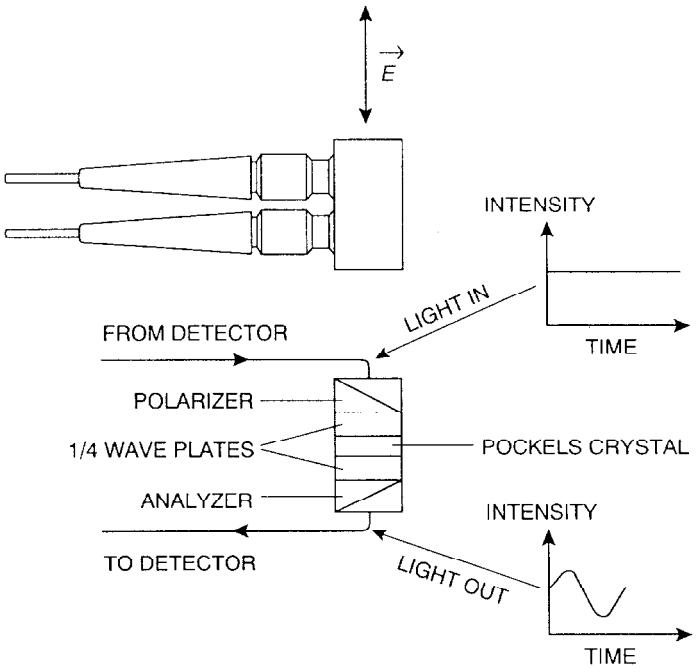

The amplitude of the modulation as light passes through the Pockels crystal and other optical elements provides a measure of the electric field *E*.

Figure 12 — Probe for Pockels-effect electric field meter

6.3 Calibration methods for electric field meters

Nearly uniform electric fields can be produced for calibration purposes with parallel plates provided that the dimensions of the plates are sufficiently large relative to the plate spacing [B2], [B15], [B36]. The uniform field value, E_o, is given by V/t where V is the applied potential difference across the plates and t is the plate spacing. As a guide for determining parallel plate dimensions, the calculated magnitudes of the electric field strength, E, normalized by the uniform field (E/E_o) at the plate surface and midway between the plates are plotted as a function of normalized distance, x/t, from the plate edge in figure 13. Numerical values are presented in table 2.

The results in table 2 show that the departure from field uniformity due to fringing fields decreases to 0.1% at a distance of one plate spacing from the edge. For square plates of finite size, the effect of the fringing fields from the four edges can be estimated using the principle of superposition when the effect from one edge is less than 0.1%. Numerical calculations of the field between finite size parallel plates suggests a discrepancy of 0.04% using this approach [B36]. These results are valid in the absence of perturbations from nearby ground planes. Calculations and measurements [B20], [B36] indicate that energization of the parallel plates with a center-tapped transformer provides a field that is more immune to perturbations due to nearby ground planes.

A parallel plate system that is suitable for calibrations of free body meters is shown in figure 14. Metal sheets or tightly stretched metal window screen on metal frames 1.5 m × 1.5 m and a separation of 0.75 m are used to form the parallel plates. The plates are energized with a function generator/power amplifier/transformer combination with adequate current limiting resistors in the transformer output leads as a safety measure [B32]. For example, 10 MΩ and larger resistors of adequate voltage rating are satisfactory up to 10 kV (i.e., $E \approx 13$ kV/m). Normal high-voltage laboratory safety practices should be followed when working with high voltages. A calibration field that is within 1% of the uniform field value, V/t, is produced at the center of

Copyright The Institute of Electrical and Electronics Engineers, Inc.
Provided by IHS under license with IEEE
No reproduction or networking permitted without license from IHS
Not for Resale

the parallel plate system described above (uncertainties in the values of *V* and *t* should be combined with the 1%). The free-body meter is positioned at the center of the parallel plate system with the insulating handle normally used during measurements. To avoid significant perturbations of the surface charge distributions on the parallel plates due to the presence of the field meter, the largest diagonal dimension of the meter should be no larger than 23 cm [B25]. In addition, the distance from the parallel plates to the nearest ground plane (walls, floor, etc.) should be 0.5 m or more. The parallel plate system can be scaled upwards or downwards for larger or smaller field meters.

Table 2 — Calculated normalized electric field values midway between plates and at plate surfaces

Midway between plates	
x*/*t	***E*/*E*o**
0.069 8	0.837
0.162 1	0.894
0.296 5	0.949
0.417 7	0.975
0.682 1	0.995
0.793 4	0.997
1.000 0	0.999
Plate surfaces	
1.000 0	1.001
0.795 4	1.002
0.686 1	1.005
0.437 6	1.025
0.243 1	1.095
0.162 4	1.183
0.123 0	1.265
0.099 1	1.342
0.082 9	1.414
0.045 2	1.732
0.030 7	2.000
0.018 5	2.449

By varying the frequency of the voltage to the parallel plates, the frequency response of the field meter can be determined.

Electro-optic electric field meters can also be calibrated in a parallel plate system; the parallel plate system may be scaled downward for the smaller dimensions of the electro-optic probe.

Copyright The Institute of Electrical and Electronics Engineers, Inc.
Provided by IHS under license with IEEE
No reproduction or networking permitted without license from IHS
Not for Resale

For calibrations of ground reference type field meters, the arrangement for energizing the parallel plates shown in figure 14 is modified so that the bottom plate is at ground potential and is used as a support for the flat probe. Because of the increased distance between the probe and top plate, the perturbation of the surface charge distribution on the top plate by the probe is greatly reduced (compared with free body meters midway between the plates). This decreased perturbation permits reduction of the parallel plate spacing previously indicated (0.75 m) and thereby increases the lateral extent of the nearly uniform field region (see figure 13 and table 2). The parallel plate spacing should be no larger than 1.5 times the side dimension of the probe, and the edges of the probe should be no closer than two plate spacings to any edge of the bottom plate. The distance between the parallel plates and the nearest ground plane (walls, floor, etc.) should be greater than two plate spacings. The guard band should be at least as wide as 6% of the side dimension and the thickness of the probe should not exceed 3.5% of its side dimension. With the above restrictions, the calibration field will be within 0.5% of the uniform field value, V/t (uncertainties in the values of V and t should be combined with the 0.5%) [B24].

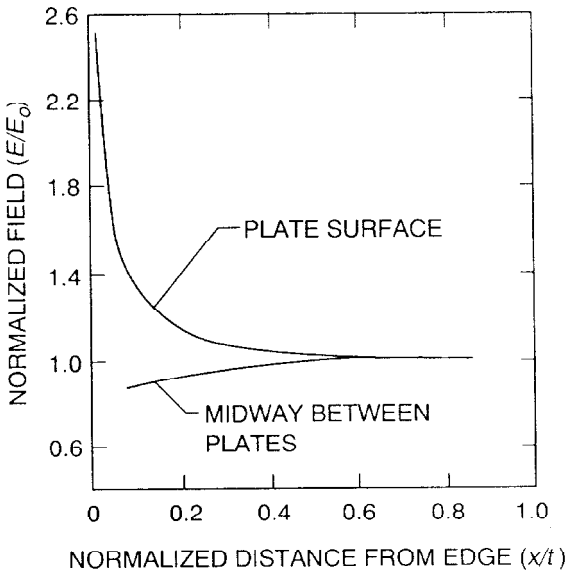

Figure 13 — Calculated normalized electric field at plate surfaces and midway between plates as function of normalized distance from edge of plate

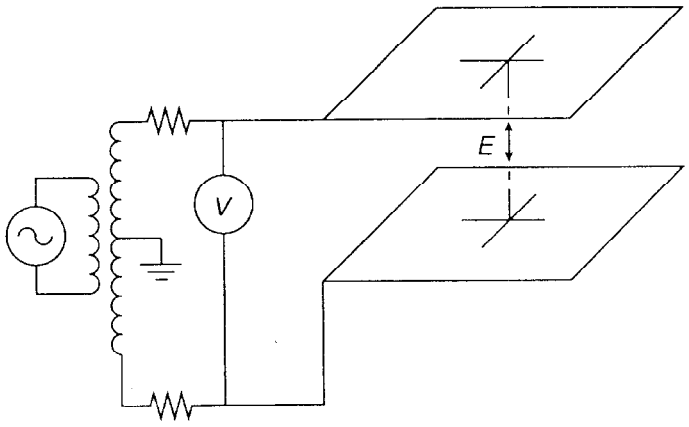

Figure 14 — Parallel plate system for calibrating free-body and Pockels-type electric field meters

Copyright The Institute of Electrical and Electronics Engineers, Inc.
Provided by IHS under license with IEEE
No reproduction or networking permitted without license from IHS
Not for Resale

Free-body and ground-reference field meters, in their initial response to an electric field, can be considered as current measuring devices. Afterwards, if there is a stage of integration in the detector circuit, the field meter reading will be proportional to the induced charge which tracks the waveform of the electric field [see equations (10) through (15)]. Therefore, if the ratio of induced current to electric field, *I*/*E*, for an electric field meter is determined by calibration, a current injection scheme can be used later as a check of the instrument calibration [B20]. Figure 15 shows a circuit that can be used for injecting known currents into the sensing electrodes of a free-body type meter. In figure 15, *V* is the voltage produced by a function generator and *Z* is a known impedance at least two orders of magnitude greater than the input impedance of the field meter. Although *Z* may consist of capacitors or resistors, resistors are preferred because the impedance of capacitors will change when the current injection technique is used at different frequencies. Further, if there are harmonics in the voltage source, smaller errors will be introduced with the use of resistors. The injected current can be calculated from Ohm's law.

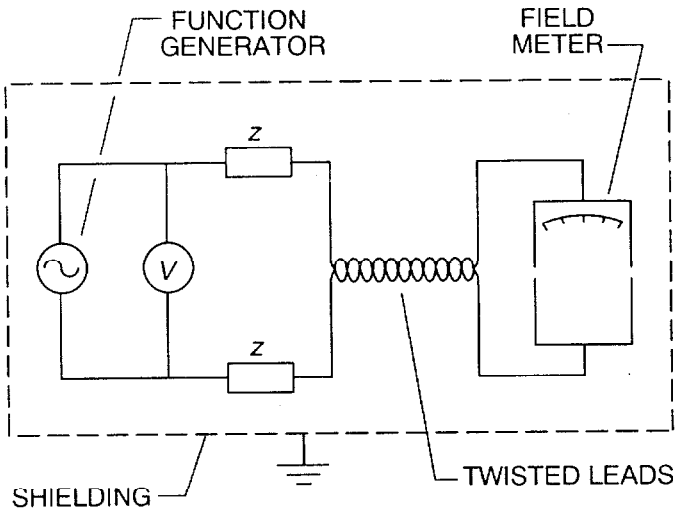

Although *Z* may be capacitors or resistors, resistors are preferred (see 6.3).

Figure 15 — Diagram for current injection technique

A circuit similar to the one shown in figure 15 can be used for injecting currents into ground-reference field meters. For this case, the impedance on the ground side of the voltage source is removed and the remaining impedance is doubled in value.

Adequate shielding is required when the current injection technique is employed in order to minimize signal contributions from such sources as nearby lighting and electrical equipment. Enclosing the current injection circuit and field meter with a grounded metal screen can reduce the signal contributions from background sources to negligible levels. The validity of the current injection approach assumes that the ratio *I*/*E* is determined soon after calibration of the field meter in a known electric field and that the field meter probe has not been modified since its calibration.

It is desirable to perform the current injection check immediately following calibration of the meter in a known electric field. Thereafter, the current injection technique can be substituted for calibrations with known electric fields produced by parallel plates.

If electrical connections can be made to the Pockels crystal in the electro-optic field meter, a voltage injection technique can be used to check the calibration of the meter once it has been calibrated in a known field. The voltage injection circuit for Pockels-type electric field meters would be similar to the one shown in figure 15, but with the impedances removed.

Copyright The Institute of Electrical and Electronics Engineers, Inc.
Provided by IHS under license with IEEE
No reproduction or networking permitted without license from IHS
Not for Resale

6.4 Sources of measurement uncertainty

Compared to the magnetic field meter case, the sources of uncertainty during measurements of electric fields are many, particularly for free-body meters without remote displays. Uncertainties that should be combined with the calibration uncertainty are as follows:

Proximity effect of observer. The proximity of an observer during electric field strength measurements can be very significant for certain geometries. Observer proximity effects during measurements in a slowly changing (approximately uniform) vertical electric field have been calculated and measured for free-body meters, and are shown in figure 16. Figure 16 shows the perturbation of the electric field measurement in percent as a function of observer distance from the probe and field meter height above the ground [B5, B28]. The data points represent measured perturbations beneath a 500 kV transmission line due to a 1.8 m tall grounded observer (arms at side). The solid curves are theoretical predictions. Because the observer's potential is frequently near ground potential due to leakage resistance and capacitance to ground, the proximity effects in figure 16 can be regarded as typical.

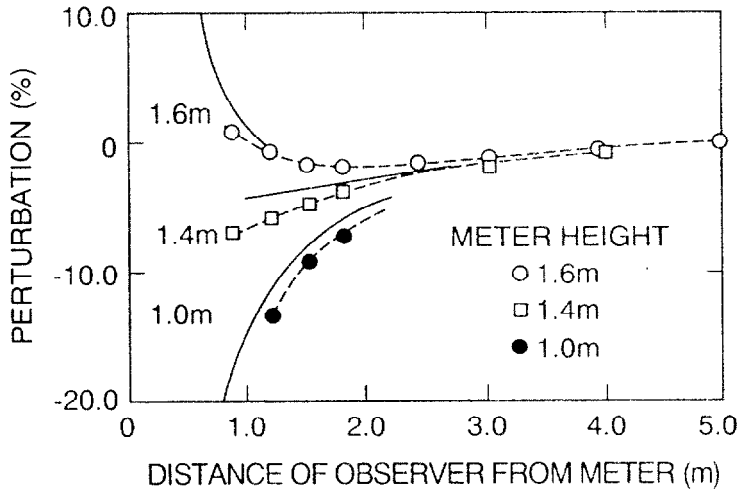

The curves represent theoretical calculations [B5] assuming a uniform electric field. The data points are for a grounded observer 1.8 m tall beneath a 500 kV transmission line. Proximity effects are shown for three heights of the field meter above the ground plane.

Figure 16 — Observer proximity effects during electric field measurements in vertical electric field

The observer proximity effects for free-body meters in other geometries can be determined experimentally by supporting the field meter handle on a vertical insulating column as shown in figure 17. Tests employing vertical glass columns with this geometry demonstrate that the presence of the column does not significantly affect the measurement. The proximity effect is determined by noting changes in field value as a function of observer distance from the center of the probe. The field meter digital or analog display is oriented so that the observer is able to view it safely during the tests. The arrangement in figure 17 can also be used as a measurement technique in situations where the field geometry is not well known. For example, it could reveal whether the observer had come between a distant energized electrode and the field meter.

Reading errors (free-body meters with analog displays). Because of significant observer proximity effects during certain measurement situations (e.g., near overhead power lines), an observer may be required to maintain a distance of more than 2 m from the probe [B11], [B15]. If a free-body meter with an analog dis-

Copyright The Institute of Electrical and Electronics Engineers, Inc.
Provided by IHS under license with IEEE
No reproduction or networking permitted without license from IHS
Not for Resale

play is being used, some uncertainty will result due to reading the display from a distance. Estimates of this uncertainty can be made by having a second observer far from the probe simultaneously determine the field reading using binoculars. Replacement of an analog display with a digital display can reduce reading errors in some cases. Ground reference and Pockels effect field meters normally have detector circuits well removed from the location of the probe and are thus not expected to lead to reading errors.

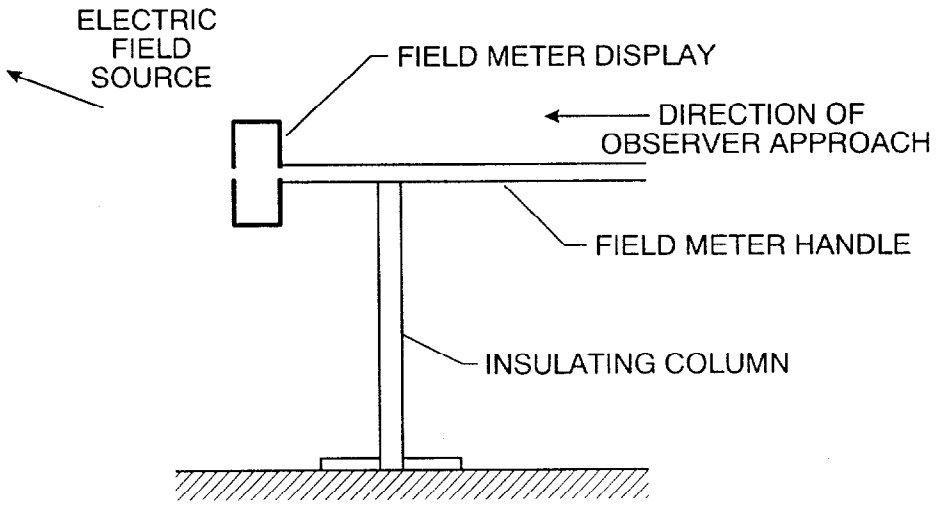

Figure 17 — Experimental arrangement that can be used to determine observer proximity effects

Proximity effects of conducting planes (free-body meters). Because of interactions that can occur between the field meter probe and surface charge distributions on nearby conducting surfaces, the electric field measurement can be significantly perturbed if the probe is brought too close to the surface. Calculations show that this perturbation for a spherical probe [figure 10 a)] is reduced to near 0.5% when the distance between a ground plane and the probe center is three probe radii [B3]. Therefore, a spherical probe is not expected to have significant measurement error if a distance of two probe diameters is maintained between the probe and conducting surfaces. The diameter of probes with rectangular geometries can be conservatively estimated as the largest diagonal dimension of the probe.

Asymmetry in probe design. Asymmetries in the design of an electric field meter probe can change the direction of the electrical axis (axis with greatest electrical sensitivity) with respect to the geometrical axis (vertical axis in figure 10). Measurements performed with such an instrument may be more or less immune to observer proximity effects [B20]. In such cases, the observer proximity effect should be quantified before the field meter is used for measurements.

Field meter inclination (free-body meters with analog displays). Mechanical imbalance of an analog display can be a source of uncertainty. If the movement is not sufficiently well-balanced, the meter should be used in the same orientation with respect to the vertical as existed during calibration. An estimate of the magnitude of this type of error can be made by rotating the meter in the absence of an electric field and observing the displacement of the needle. The measurement error due to mechanical imbalance can be reduced by repeating a measurement after rotating the probe 180 degrees (about an axis normal to the face of the meter) and taking the average of the two measurements. This procedure can be used if the geometrical and electrical axes coincide. Replacement of an analog display with a digital display will eliminate uncertainties due to poor mechanical balance.

Copyright The Institute of Electrical and Electronics Engineers, Inc.
Provided by IHS under license with IEEE
No reproduction or networking permitted without license from IHS
Not for Resale

The response of an electric field meter with an analog display to the same induced current may depend on the meter's orientation, even if mechanically balanced. This effect can be a source of measurement uncertainty if the electric field meter is used in an orientation that differs from that used during calibration in a known field. The magnitude of this possible source of uncertainty can be determined using the current injection technique (see 6.3) while rotating the electric field meter in the absence of an electric field.

Ambient magnetic fields. Because magnetic fields are typically produced at the same time as electric fields, electric field meters should be designed so that they are not significantly affected by magnetic fields at the levels anticipated in a given measurement environment. The coil system described earlier (see 5.4) for producing magnetic fields can be used to check for immunity to magnetic fields.

Handle leakage (free-body meter). Electrical leakage via a grounded observer and surface contamination on the insulating handle of the field meter may perturb the electric field beyond the normal geometric perturbation produced by the electrically floating probe. To check for handle leakage, the electric field meter should be oriented with its axis perpendicular to the direction of a known field. Significant electrical leakage would cause a nonzero reading. Such a reading, expressed as a percent of the actual field would represent the order of magnitude of the uncertainty that could be caused by this mechanism. It is assumed for this check that the electrical and geometrical axes coincide.

Nonuniform electric field (free-body meter). Although electric field meters are calibrated in a nearly uniform field (6.3), they normally may be used with small uncertainty for measurements in nonuniform fields. This can be seen by considering the current induced in a spherical probe by a highly nonuniform electric field produced by a point charge $Q(\omega t)$ that oscillates in magnitude with angular frequency ω. In the absence of nearby ground planes, the induced current is given by

$$I = 3\pi a^2 \omega \varepsilon_o E\left[1 - \frac{7}{12}\beta^2 + \frac{11}{24}\beta^4 - \ldots\right], \tag{17}$$

where

E is $Q(\omega t)/4\pi\in_o d^2$
β is a/d
a is the radius of the spherical probe
d is the distance between the point charge and center of probe

NOTE—This result is given without derivation in [B23]. It can be readily derived by considering an uncharged conducting sphere in the field of a point charge and using the method of images.

Equation (17) is derived assuming that the probe is aligned with the electric field direction.

Comparing equation (17) with equations (11) and (13) reveals that the induced current is the same as that produced by a uniform field of magnitude $Q(\omega t)/4\pi\in_o d^2$ if the terms in (a/d) are ignored. Thus, the current induced between the two halves of a spherical dipole that is located at a point in a highly nonuniform field produced by a point charge is nearly the same as that produced by a uniform field of equal magnitude if d is sufficiently large. For example, if a/d is equal to 0.1, the difference in induced current (i.e., electric field measurement) produced by a uniform field and a highly nonuniform field is less than 1%. The change in electric field magnitude over the dimensions of the sphere is

$$\Delta E/E \approx 4a/d = 0.4$$

It can be shown that the measurement error remains small even when the probe is not aligned with the electric field direction [B27]. Consequently, the uncertainty caused by nonuniformity of the field will be negligible for many practical cases. Calculations also show that probes in the shape of parallel plates can also be used to measure nonuniform electric fields with small error if the difference in induced charges or induced

Copyright The Institute of Electrical and Electronics Engineers, Inc.
Provided by IHS under license with IEEE
No reproduction or networking permitted without license from IHS Not for Resale

currents on the plates is measured by the detector [B27]. For comparisons with equation (17), the radius of field meters that have rectangular geometries can conservatively be estimated as half the largest diagonal dimension.

Humidity. Under high humidity conditions, a layer of surface condensation may form on parts of an electric field meter. The major source of uncertainty comes from handle leakage through the mounting insulation to one of the electrodes. If significant, this leakage will greatly increase the currents induced in the probe and the resulting field meter reading. A much smaller uncertainty is associated with leakage between the two sensing electrodes, which would reduce the reading of the field meter. The field meter, its handle assembly, and its internal insulation should be kept clean and dry to minimize errors due to leakage currents.

Electro-optic probes, which have dielectric covers, also may be adversely affected under high humidity conditions. For this case, a layer of surface condensation could act as a Faraday cage and attenuate the electric field reaching the Pockels crystal.

The influence of ambient humidity on the performance of field meters can be determined by applying the current injection technique (free-body meters) or voltage injection technique (electro-optic meters) with the field meter in an environmental chamber. The dependence on humidity can be determined by monitoring the field meter response as a function of humidity while holding the injected current (voltage) constant.

Temperature. Environmental chamber tests of free-body meters with analogue displays have shown that the field meter reading can change by as much as 8% over the temperature range 0 °C to 40 °C [B20]. As for the magnetic field meter case (see 5.4), if extreme differences in temperature are anticipated at a measurement site compared to the temperature at the time of calibration, the effects of temperature should be known or may need to be quantified. The characterization procedure is the same as for magnetic field meters (see 5.4) with the voltage injection technique replaced with the current injection technique.

The sensitivity of electro-optic type probes is also affected by temperature changes. Tests of Pockels crystals made from $Bi_{12}SiO_{20}$ indicate a temperature dependence of less than ± 3% for the temperature range –15 °C to 70 °C [B10]. However, it is known that other crystals that exhibit the Pockels effect have greater temperature coefficients than $Bi_{12}SiO_{20}$, and thus may require correction for temperature.

6.5 Calibration procedure and specifications for electric field meters

Electric field meters should be calibrated periodically at intervals dependent in part on the stability of the meter. The field meter probe should be placed between parallel plates according to meter type as described in 6.3. For example, free-body meters with no diagonal dimension greater than 23 cm should be placed at the center of parallel plates 1.5 m × 1.5 m × 0.75 m spacing, using the insulating handle normally employed during field measurements. The parallel plate dimensions may be scaled upward or downward for larger or smaller free-body meters, etc.

Calibrations should be performed with sinusoidal electric fields at the levels and frequencies that are relevant for the measurement environment of interest. At representative frequencies, a plot of the calculated uniform electric field strength, V/t, vs. the voltage, V, applied to the parallel plates should be made as shown in figure 18. The uncertainty in the calculated electric field should be indicated at a representative point with a vertical error bar. This error bar includes uncertainties in measured voltage, the parallel-plate spacing, and the departure from field uniformity (< 1%). A region of acceptable field meter readings should also be indicated on the plot as shown in figure 18 (the vertical bar representing the uncertainty associated with the calculated electric field should be contained in this region). Measured values obtained with the field meter that is being calibrated should also be plotted. At least three electric field levels for each range of the field meter, sufficient to span 30% to 90% of full scale, should be recorded for meters with analog displays. At least four electric field levels, sufficient to span 10% to 90% of full scale, should be recorded for meters with digital displays. Field meters with autoranging capabilities should be calibrated on each range at no less than three

Copyright The Institute of Electrical and Electronics Engineers, Inc.
Provided by IHS under license with IEEE
No reproduction or networking permitted without license from IHS
Not for Resale

representative points that span most of the range. On the most sensitive range, one of the calibration points should be 10% of the maximum value for that range. On the least sensitive range, one of the calibration points should be 90% of the maximum value for that range. The maximum measured field should occur when the probe axis is rotated to within ±10 degrees of the vertical direction, and the maximum value should lie within the region of acceptable readings (see figure 18). Field meters with readings that fail to satisfy the above criteria should be considered inaccurate. To meet these requirements, the signal from the probe should be amplified, integrated (free-body and ground-reference meters), and filtered with appropriate high-pass and low-pass filters as needed.

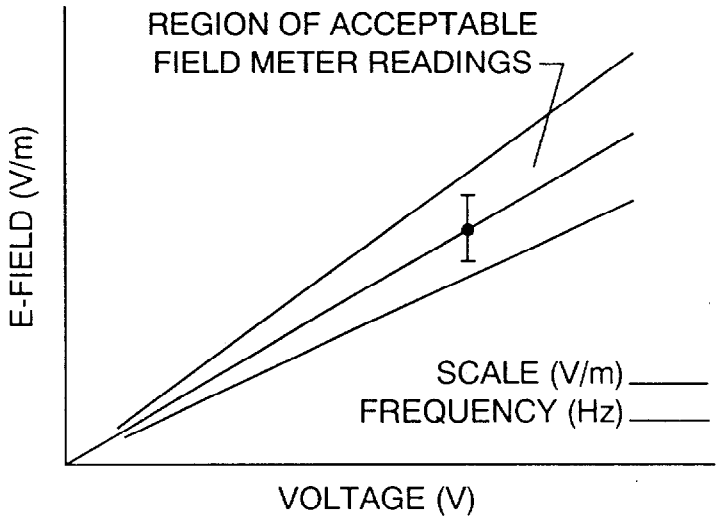

The calibration field (ordinate) is determined by calculation and is taken to be the uniform field value (see 6.5).

Figure 18 — Diagram for calibrating electric field meters

What may be considered as an acceptable region of field meter readings and an acceptable uncertainty in the calculated electric field is left to standards that describe measurement protocols for specific measurement environments (see note in 1.1). The recorded field values permit the determination of correction factors that should be applied to field meter readings when measurements are performed in the environment of interest. The uncertainty associated with the above calibration process is equal to the uncertainty of the calculated electric field once the correction factors have been applied to the field meter readings.

It is desirable to perform a calibration check using the current or voltage injection technique at the time the field meter is calibrated in a known field. This practice would allow calibration checks to be substituted for calibrations in fields produced with parallel-plates.

Calibrations or calibration checks should be performed prior to any extended period of field meter use, e.g., if measurements are performed over a period of several days to a week. This practice is particularly important when there are logistical difficulties in returning to the measurement location at a later time.

Energizing power supplies for the parallel-plates or the current/voltage injection circuits should be nearly free (< 1%) of harmonic content.

The following field meter specifications should be provided (see also clause 7):

Dynamic range and measurement uncertainty. Indication of the range of minimum to maximum field levels that can be measured within specified uncertainties.

Copyright The Institute of Electrical and Electronics Engineers, Inc.
Provided by IHS under license with IEEE
No reproduction or networking permitted without license from IHS Not for Resale

Frequency response or pass band. Indication, in percent or decibels, of the maximum departure of the field measurement from actual value as a function of frequency. This information may be provided with figures and/or text.

Other specifications that should be provided are field meter (including probe) dimensions, weight, operating temperatures, and power requirements.

The filter characteristics may be described in terms of the high-pass corner frequency, high-pass characteristic, low-pass corner frequency, etc. Specifications may be required, in some cases, on pass band ripple, e.g., Chebyshev filters.

6.6 Measurement uncertainty

In order to determine the total uncertainty associated with rms measurements of the electric field strength in different measurement environments, there should be an appropriate accounting of the various sources of uncertainty. Possible sources of uncertainty have been identified in 6.3 and 6.4. Many sources of uncertainty can be made negligible or, depending on the type of field meter, may not apply in a given measurement situation. In any event, the combined uncertainty of the significant sources of uncertainty should be taken as the square root of the sum-of-the-squares. As noted in 5.6, some judgment is called for performing this calculation. The discussion regarding bandwidth and measurements of fields with harmonics and measurements near background field levels are applicable in the present case.

7. Desirable field meter characteristics

7.1 Electrical characteristics

Power supply. The instrument should employ a self-contained power supply that is isolated from external electric fields. If batteries are used, provision should be made for indicating their condition. Survey type and personal exposure recording instruments should be capable of at least 8 h operation within its rated accuracy before replacement or recharging of the batteries becomes necessary.

Precision and accuracy. The instrument should be provided with calibration data or instrument specifications that permits the user to assess the maximum uncertainty in determining field levels when using the instrument in fields containing different frequencies. This information should also include the sensitivity of the instrument to frequencies beyond the intended useful range.

7.2 Physical characteristics

Portability. The instrument should be portable to permit, where appropriate, convenient operation under restrictive conditions, e.g., climbing a tower with a survey meter.

Weight. The weight should be kept as low as is practical in keeping with good engineering practice.

Volume. The volume should be as small as is practical and convenient for, when appropriate, hand-held operation.

Dependence on temperature and humidity. The specified accuracy of the instrument should include the effects of temperature and humidity, and the operating ranges for these parameters should be indicated.

Durability. The indicating meter and other system components should be rugged enough to withstand vibration and shock resulting from transport. A carrying case is desirable.

Copyright The Institute of Electrical and Electronics Engineers, Inc.
Provided by IHS under license with IEEE
No reproduction or networking permitted without license from IHS
Not for Resale

Readability. The meter dial markings or digital displays of magnetic field meters should be large enough to be easily read at arm's length. The meter dial markings or digital display of free-body electric field meters should be large enough to be read at greater distances to avoid perturbations of the electric field due to proximity effects of the observer (see 6.4). If more than one range of sensitivity is provided, the full scale value of the selected range should be indicated and the units should be readily interpretable. For autoranging instrumentation, the dynamic range may be indicated elsewhere, e.g., in the user manual. The instrumentation should provide a clear indication of the units being displayed. To comply with this standard, instrumentation marketed prior to the issue of this standard, that do not indicate the units, should be provided with an appropriate label indicating the units. This may be accomplished by the user applying a label to the body of the field meter. Alternatively, a label provided by the manufacturer to the user, may be applied by the user.

Ease of adjustment. The instrument should have a minimum number of controls. They should be clearly labeled as to their functions.

Location and orientation of coil probes. The locations and orientations of coil probes that are contained within the housings of magnetic field meters should be clearly indicated on the instrument or in the instruction manual.

Copyright The Institute of Electrical and Electronics Engineers, Inc.
Provided by IHS under license with IEEE
No reproduction or networking permitted without license from IHS
Not for Resale

Annex A

(informative)

DC magnetic field instrumentation

The purpose of this annex is to note that measurements of direct current (dc) magnetic fields can be performed accurately with a range of commercially available instrumentation employing a variety of measurement techniques [a1]. For example, fluxgate magnetometers, nuclear magnetic resonance (NMR) field meters, Hall-effect field meters, and the superconducting quantum interference device (SQUID) magnetometers are a few of the instruments available.

Fluxgate magnetometers and Hall-effect field meters can be used to characterize the range of dc fields anticipated for the measurement environments considered in the accompanying standard. Fluxgate magnetometers have adequate sensitivity to measure fields in the range 0.1 μT (and lower) to 0.01 T, and Hall-effect meters readily can measure levels between 100 μT and 10 T [a1].

Standard reference magnets are commercially available for calibration purposes at relatively high field levels, e.g., 0.005 T to 2 T. The coil systems referred to in 5.5 can be used to generate known dc fields, with lower values, if dc currents are used to energize the coils. However, the influence of the background dc field must be considered when significant in magnitude compared to the calibration field. Standard reference magnets are available with magnetic shields to prevent perturbations from external fields. The background dc field may also be cancelled using a set of auxiliary coils. Orienting the axis of the calibration coil system in the east-west direction reduces the influence of the geomagnetic field.

It is noteworthy that the very high accuracy of NMR magnetic field meters permits their use as a reference standard.

A.1 Bibliography for annex A

[al] Lenz, J. E., “A Review of Magnetic Sensors,” *Proceedings of the IEEE,* vol.78, pp. 973–989, 1990.

Copyright The Institute of Electrical and Electronics Engineers, Inc.
Provided by IHS under license with IEEE
No reproduction or networking permitted without license from IHS
Not for Resale

Annex B

(informative)

Units and conversion factors

B.1 Units and conversion factors

Units preferred by the IEEE are the International System of Units (Système International d'Unités, or SI Units). Some commonly used units and conversion factors are listed in table B.1.

Table B.1 — Conversion from customary to SI units

To convert from (other units)	To (SI Units)	Multiply by
Length		
inch (in)	meter (m)	2.540 E–02
foot (ft)	meter (m)	3.048 E–01
mile (mi)	meter (m)	1.609 E+03
Magnetic flux density		
gauss	tesla (T)	1.000 E-04

For additional units and conversion factors, see IEEE Std 268-1982 [b1].

Copyright The Institute of Electrical and Electronics Engineers, Inc.
Provided by IHS under license with IEEE
No reproduction or networking permitted without license from IHS Not for Resale

B.2 SI Units

Quantity	Unit
Time	**Second (s)**
Electric potential	volt (V) kilovolt (kV)
Current	ampere (A)
Inductance	henry (H)
Resistance	ohm (Ω)

B.3 Useful physical constants

Constant	Equation
Permeability Constant μo	$4\pi \cdot 10–7$ H/m
Permittivity Constant $\in o$	$8.854 \cdot 10–12$ F/m

B.4 Bibliography for annex B

[b1] IEEE Std 268-1992, American National Standard for Metric Practices (ANSI).

--`,,`-`-`,,`,,`,`,,`---

Copyright The Institute of Electrical and Electronics Engineers, Inc.
Provided by IHS under license with IEEE
No reproduction or networking permitted without license from IHS
Not for Resale

Annex C

(informative)

Bibliography

[B1] Beirsdorfer, P. and Clothiaux, E.J., "High-Frequency Magnetic Measurements Using Small Inductive Probes," *American Journal of Physics*, vol. 51, pp. 1031–1036, 1983.

[B2] Bottauscio, O., Crotti, G., D'Emilio, S., Farina, G., and Mantini, A., "Generation of Reference Electric and Magnetic Fields for Calibration of Power-Frequency Field Meters," *IEEE Transactions on Instrumentation and Measurement,* vol. 42, pp. 547–552, 1993.

[B3] Cooke, C.M., "Proximity Effect of a Conducting Plane in Electro-Optic Field Probe Measurements," *1983 Conference on Electrical Insulation and Dielectric Phenomena,* Buck Hill Falls, PA, 1983.

[B4] Deno, D.W., "Transmission Line Fields," *IEEE Transactions on Power Apparatus and Systems,* vol PAS-95, pp. 1600–1611, 1976.

[B5] DiPlacido, J., Shih, C.H., and Ware, B.J., "Analysis of the Proximity Effects in Electric Field Measurements," *IEEE Transactions on Power Apparatus and Systems,* vol. PAS-97, pp. 2167–2177, 1978.

[B6] Frix, W.M., Karady, G.G., and Venetz, B.A., "Comparison of Calibration Systems for Magnetic Field Measurement Equipment," *IEEE Transactions on Power Delivery,* vol. 9, pp. 100–109, 1994.

[B7] Fulcomer, P.M., "NBS Ambient Magnetic Field Meter for Measurement and Analysis of Low-level Power Frequency Magnetic Fields in Air," *National Institute of Standard and Technology Report NBSIR 86–3330,* 1985.

[B8] Gockenbach, E., Ganzmann, P., and Brogli. E., "Some Applications of an Electric Field Sensor in the High Voltage Technique," Paper 40.06, *Sixth International Symposium on High Voltage Engineering,* New Orleans, LA, 1989.

[B9] Halliday, D. and Resnick, R., *Physics, Parts I and II,* New York: Wiley & Sons, pp. 861–862, 1966.

[B10] Hamasaki, H., Gotoh, H., Katoh, M., and Takeuchi, S., "OPSEF: An Optical Sensor for Measurement of High Electric Field Intensity," *Electronics Letters,* vol. 16, pp.406–407, 1980.

[B11] IEC Publication 833 (1987), Measurement of Power Frequency Electric Fields.

[B12] IEEE Magnetic Fields Task Force Report, "An Evaluation of Instrumentation Used to Measure AC Power System Magnetic Fields," *IEEE Transactions on Power Delivery,* vol.6, pp. 373–383, 1991.

[B13] IEEE Magnetic Fields Task Force Report, "Measurement of Power Frequency Magnetic Fields Away from Power Lines," *IEEE Transactions on Power Delivery,* vol.6, pp. 901–911, 1991.

[B14] IEEE Magnetic Fields Task Force Report, "A Protocol for Spot Measurements of Residential Power Frequency Magnetic Fields," *IEEE Transactions on Power Delivery,* vol. 8, pp. 386–1394, 1993; *I*EEE Magnetic Fields Task Force Report, Correction to "A Protocol for Spot Measurements of Residential Power Frequency Magnetic Fields," Ibid, vol. 9, p. 606, 1994.

--`,-`-`,,`,,`,`,,`---
Copyright The Institute of Electrical and Electronics Engineers, Inc.
Provided by IHS under license with IEEE
No reproduction or networking permitted without license from IHS Not for Resale

[B15] IEEE Std 644-1994, IEEE Standard Procedures for Measurements of Power Frequency Electric and Magnetic Fields from AC Power Lines.

[B16] IEEE Std 1140-1994, IEEE Standard Procedures for the Measurement of Electric and Magnetic Fields from Video Display Terminals (VDTs) from 5 Hz to 400 kHz (ANSI).

[B17] Kaune, W.T., Stevens, R.G., Callahan, N.J., Severson, R.K. and Thomas, D.B., "Residential Magnetic and Electric Fields," *Bioelectromagnetics,* vol. 8, pp. 315–335, 1987.

[B18] Kirkham, H., Johnston, A., Jackson, S., and Sheu, K., "AC and DC Electric Field Meters Developed for the U.S. Department of Energy," Jet Propulsion Laboratory Report prepared for U.S. Department of Energy, *JPL Publication* 87-20, February 1987.

[B19] Kirschvink, J.L.,"Uniform Magnetic Fields and Double Wrapped Coil Systems," *Bioelectromagnetics,* vol.13, pp. 401–411, 1992.

[B20] Kotter, F.R. and Misakian, M., "AC Transmission Line Field Measurements," *NBS report prepared for the Department of Energy,* November, 1977, available as report PB82133554 from NTIS, Springfield, VA 22161.

[B21] Lenz, J.E., "A Review of Magnetic Sensors," *Proceedings of the IEEE,* vol.78, pp. 973–989, 1990.

[B22] Mader, D.L., and Peralta, S.B., "Residential Exposure to 60-Hz Magnetic Fields From Appliances," *Bioelectromagnetics,* vol. 13, pp. 287–301, 1992.

[B23] Mihaileanu, C., et al., "Electrical Field Measurements in the Vicinity of HV Equipment and Assessment of its Biophysiological Perturbing Effects," *CIGRE Pape*r 36-08, Paris, France, 1976.

[B24] Misakian, M., "Calibration of Flat 60-Hz Electric Field Probes," *Bioelectromagnetics,* vol. 5, pp.447–450, 1984.

[B25] Misakian, M., 1985. *Discussion of B36*.

[B26] Misakian, M., "Coil Probe Dimensions and Uncertainties During Measurements of Nonuniform ELF Magnetic Fields," *National Institute of Standards and Technology Journal of Research,* vol. 98, pp. 287–295, 1993; M. Misakian and C. Fenimore, "Three-axis Coil Probe Dimensions and Uncertainties During Measurement of Magnetic Fields from Appliances," ibid., vol. 99, pp. 247–253, 1994.

[B27] Misakian, M. and Fulcomer, P.M., "Measurement of Nonuniform Power Frequency Electric Field," *IEEE Transactions on Electrical Insulation*, vol. EI-18, pp. 657–661, 1983.

[B28] Misakian, M., and Kotter, F.R., *Discussion of B5*.

[B29] Olsen, R.G., Deno, D, and Baishiki, R.S., "Magnetic Fields from Electric Power Lines, Theory and Comparison to Measurements," *IEEE Transactions on Power Delivery,* vol. 3, pp. 2127–2136, 1988.

[B30] Primdahl, F., "The fluxgate magnetometer," *Journal of Physics E, Scientific Instruments,* vol. 12, pp. 241–253, 1979.

[B31] Ramo, S. and Whinnery, J.R., *Fields and Waves in Modern Radio,* New York: John Wiley, 1944, p. 141 ff.

--`,,`,,`-`-`,,`,,`,`,,`---

Copyright The Institute of Electrical and Electronics Engineers, Inc.
Provided by IHS under license with IEEE
No reproduction or networking permitted without license from IHS
Not for Resale

[B32] Reilly, J.P., et al., “Electric and Magnetic Field Coupling from High-Voltage AC Power Transmission Lines--Classification of Short Term Effects on People,” *IEEE Transactions on Power Apparatus and Systems,* vol. PAS-97, pp. 2243–2252, 1978.

[B33] Reitz, J.R. and Milford, F.J., *Foundations of Electromagnetic Theory.* Reading, MA: Addison-Wesley, p. 52, 1960.

[B34] Sicree, R. M., Rauch, G. B., and Dietrich, F. M., “Comparison of Magnetic Flux Density Meter Responses Over A Database of Residential Measurements,” *IEEE Transactions on Power Delivery,* vol. 8, pp. 607–619, 1993.

[B35] Stratton, J.A., *Electromagnetic Theory,* New York: McGraw-Hill, p. 437, 1941.

[B36] Takuma, T., Kawamoto, T., and Sunaga, Y., “Analysis of Calibration Arrangements for AC Field Strength Meters,” *IEEE Transactions on Power Apparatus and Systems,* vol. PAS-104, pp.489–496, 1985.

[B37] Vinh, T., Jones, T.L., and Shih, C.H., “Magnetic Fields Near Overhead Distribution Lines-Measurements and Estimating Techniques,” *IEEE Transactions on Power Delivery,* vol. 6, pp. 912–921, 1991.

[B38] Weber, E., *Electromagnetic Theory,* New York: Dover, pp. 131–133, 1965.

Copyright The Institute of Electrical and Electronics Engineers, Inc.
Provided by IHS under license with IEEE
No reproduction or networking permitted without license from IHS
Not for Resale