

1725™

IEEE Standard for Rechargeable Batteries for Cellular Telephones

IEEE Power Engineering Society

Sponsored by the
Stationary Batteries Committee

1725™

IEEE
3 Park Avenue
New York, NY 10016-5997, USA

18 April 2006

IEEE Std 1725™-2006

--`,,```,,,,````-`-`,,`,,`,`,,`---

Copyright The Institute of Electrical and Electronics Engineers, Inc.
Provided by IHS under license with IEEE
No reproduction or networking permitted without license from IHS

Not for Resale

and Electronics Engineers, Inc.
IEEE
nitted without license from IHS
Not for Resale

IEEE Standard for Rechargeable Batteries for Cellular Telephones

Sponsor

Stationary Batteries Committee
of the
IEEE Power Engineering Society

Approved 30 March 2006

IEEE-SA Standards Board

--`,,```,,,,````-`-`,,`,,`,`,,`---

Copyright The Institute of Electrical and Electronics Engineers, Inc.
Provided by IHS under license with IEEE
No reproduction or networking permitted without license from IHS

Not for Resale

Abstract: This standard establishes criteria for design analysis for quality and establishes criteria for reliability of rechargeable Li-Ion and Li-Ion polymer batteries for mobile telephone applications. Also included in the standard are battery pack electrical and mechanical construction, packaging technologies, pack and cell level charge and discharge controls, and overall system considerations.
Keywords: ac/dc adapter, ac/dc charger, battery pack, cell, dc/dc adapter, dc/dc charger, failure mode and effects analysis (FMEA), host device, Li-Ion polymer battery, mobile telephone battery, rechargeable Li-Ion battery

The Institute of Electrical and Electronics Engineers, Inc.
3 Park Avenue, New York, NY 10016-5997, USA

Copyright © 2006 by the Institute of Electrical and Electronics Engineers, Inc.
All rights reserved. Published 18 April 2006. Printed in the United States of America.

IEEE is a registered trademark in the U.S. Patent & Trademark Office, owned by the Institute of Electrical and Electronics Engineers, Incorporated.

Print: ISBN 0-7381-4944-6 SH95526
PDF: ISBN 0-7381-4945-4 SS95526

No part of this publication may be reproduced in any form, in an electronic retrieval system or otherwise, without the prior written permission of the publisher.

--`,,```,,,,````-`-`,,`,,`,`,,`---

Copyright The Institute of Electrical and Electronics Engineers, Inc.
Provided by IHS under license with IEEE
No reproduction or networking permitted without license from IHS Not for Resale

IEEE Standards documents are developed within the IEEE Societies and the Standards Coordinating Committees of the IEEE Standards Association (IEEE-SA) Standards Board. The IEEE develops its standards through a consensus development process, approved by the American National Standards Institute, which brings together volunteers representing varied viewpoints and interests to achieve the final product. Volunteers are not necessarily members of the Institute and serve without compensation. While the IEEE administers the process and establishes rules to promote fairness in the consensus development process, the IEEE does not independently evaluate, test, or verify the accuracy of any of the information contained in its standards.

Use of an IEEE Standard is wholly voluntary. The IEEE disclaims liability for any personal injury, property or other damage, of any nature whatsoever, whether special, indirect, consequential, or compensatory, directly or indirectly resulting from the publication, use of, or reliance upon this, or any other IEEE Standard document.

The IEEE does not warrant or represent the accuracy or content of the material contained herein, and expressly disclaims any express or implied warranty, including any implied warranty of merchantability or fitness for a specific purpose, or that the use of the material contained herein is free from patent infringement. IEEE Standards documents are supplied "**AS IS**."

The existence of an IEEE Standard does not imply that there are no other ways to produce, test, measure, purchase, market, or provide other goods and services related to the scope of the IEEE Standard. Furthermore, the viewpoint expressed at the time a standard is approved and issued is subject to change brought about through developments in the state of the art and comments received from users of the standard. Every IEEE Standard is subjected to review at least every five years for revision or reaffirmation. When a document is more than five years old and has not been reaffirmed, it is reasonable to conclude that its contents, although still of some value, do not wholly reflect the present state of the art. Users are cautioned to check to determine that they have the latest edition of any IEEE Standard.

In publishing and making this document available, the IEEE is not suggesting or rendering professional or other services for, or on behalf of, any person or entity. Nor is the IEEE undertaking to perform any duty owed by any other person or entity to another. Any person utilizing this, and any other IEEE Standards document, should rely upon the advice of a competent professional in determining the exercise of reasonable care in any given circumstances.

Interpretations: Occasionally questions may arise regarding the meaning of portions of standards as they relate to specific applications. When the need for interpretations is brought to the attention of IEEE, the Institute will initiate action to prepare appropriate responses. Since IEEE Standards represent a consensus of concerned interests, it is important to ensure that any interpretation has also received the concurrence of a balance of interests. For this reason, IEEE and the members of its societies and Standards Coordinating Committees are not able to provide an instant response to interpretation requests except in those cases where the matter has previously received formal consideration. At lectures, symposia, seminars, or educational courses, an individual presenting information on IEEE standards shall make it clear that his or her views should be considered the personal views of that individual rather than the formal position, explanation, or interpretation of the IEEE.

Comments for revision of IEEE Standards are welcome from any interested party, regardless of membership affiliation with IEEE. Suggestions for changes in documents should be in the form of a proposed change of text, together with appropriate supporting comments. Comments on standards and requests for interpretations should be addressed to:

Secretary, IEEE-SA Standards Board
445 Hoes Lane
Piscataway, NJ 08854
USA

NOTE—Attention is called to the possibility that implementation of this standard may require use of subject matter covered by patent rights. By publication of this standard, no position is taken with respect to the existence or validity of any patent rights in connection therewith. The IEEE shall not be responsible for identifying patents for which a license may be required by an IEEE standard or for conducting inquiries into the legal validity or scope of those patents that are brought to its attention.

Authorization to photocopy portions of any individual standard for internal or personal use is granted by the Institute of Electrical and Electronics Engineers, Inc., provided that the appropriate fee is paid to Copyright Clearance Center. To arrange for payment of licensing fee, please contact Copyright Clearance Center, Customer Service, 222 Rosewood Drive, Danvers, MA 01923 USA; +1 978 750 8400. Permission to photocopy portions of any individual standard for educational classroom use can also be obtained through the Copyright Clearance Center.

--`,,```,,,,````-`-`,,`,,`,`,,`---
Copyright The Institute of Electrical and Electronics Engineers, Inc.
Provided by IHS under license with IEEE
No reproduction or networking permitted without license from IHS
Not for Resale

Introduction

This introduction is not part of IEEE Std 1725-2006, IEEE Standard for Rechargeable Batteries for Cellular Telephones.

The working group was formed to provide a platform based on the experience of industry leaders in cell, battery pack, and systems management leading to design approaches for mobile phones. The focus of the standard is on design approaches for reliable operation of mobile phones and similar rechargeable battery operated systems. This standard may be relevant to other devices, but these were not expressly considered in the development of this standard.

Figure 1 presents the need for an approach involving all subsystems of the system, including the user and environment, to arrive at a satisfactory user experience. It is necessary to examine all design margins in combination to understand the true effect of a multiple fault response on the mobile phone. This standard addresses such questions as follows: What are the critical operational parameters, and how do these parameters change with time and environment? What are the effects of extremes in temperature, pressure, and impact? A total system view is required to protect the design margins in the various components. The goal of reliability and positive user experience requires that design margins be maintained as user patterns, profiles, and duty cycles change.

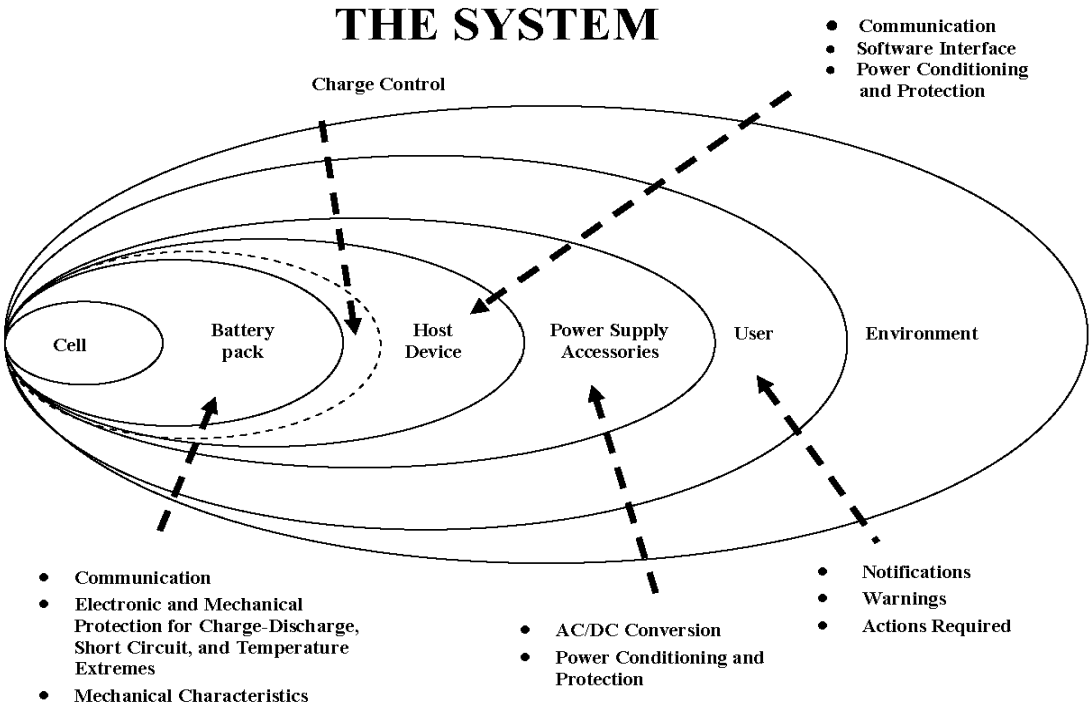

Figure 1—Conceptual diagram of a mobile phone and its user
(Examples of functions for each subsystem component are shown)

This standard applies to all types of rechargeable lithium ion (Li-Ion) and lithium-ion polymer (Li-Ion polymer) batteries and battery packs for use in mobile phones. This standard is limited to battery packs consisting of single Li-Ion cell or battery packs with multiple Li-Ion cells connected in parallel. Battery packs with cells connected in series are outside the scope of this standard. Because of the nature of the interactions between the battery and the host device, a system approach must be used in developing an appropriate operating envelope for the system. The provisions of this standard are intended to provide considerations for design analyses to minimize the occurrence of failures leading to hazards.

Copyright © 2006 IEEE. All rights reserved.

Copyright The Institute of Electrical and Electronics Engineers, Inc.
Provided by IHS under license with IEEE
No reproduction or networking permitted without license from IHS
Not for Resale

This standard is a System Level Standard as depicted in Figure 1. Overall compliance is dependent on conformity to each and every subclause of the standard. Compliance with the standard cannot be achieved by any particular mobile phone or subsystem alone without considering the conformity of all subsystems within the system as well as the user. It is incumbent on the manufacturers/suppliers of the host device, battery pack, and cell to review, thoroughly, their designs alone and in conjunction with other subsystems to identify faults that could propagate hazards. Once it has been ascertained that the cell, battery pack, and host device all conform to all their particular subclause requirements, the overall system compliance is not complete until the manufacturer/supplier completes a thorough design analysis, for example, DFMEA, to ensure their particular design prevents hazards from occurring during intended use and reasonable and foreseeable misuse.

At the end of this standard, there are five informative annexes. Annex A summarizes tests that may be used in conjunction with design verification for reliable performance of cells, battery packs, and host devices. Annex B briefly describes the FMEA process through a series of examples. Annex C provides guidance and background information related to two-fault tolerant system analysis. Annex D provides an option to implement validation of the requirement contained within this standard to include both product testing and process/system auditing to qualify or certify components and products for use in mobile phones. Annex E reports thermal environmental considerations encountered in automobiles. Annex F is a bibliography of references useful for understanding and implementing this standard.

The Working Group suggests that this standard be updated in two years, in view of the rapidity that new technology is introduced to the market.

CAUTION

Compliance with the provisions of this standard does not imply compliance to the regulatory requirements that are applicable to cell, battery packs, and systems. Care must be used to observe and refer to the applicable regulatory requirements, as part of the intended design analyses, for this standard does not assure protection or safety. This standard sets forth recommendations for design analyses and certain testing procedures. The level of assurance for protection and safety resulting from applying this standard depends on the implementation by the manufacturer/supplier and the actions of the end user. Compliance with the standard does not guarantee safety in all circumstances.

Notice to users

Errata

Errata, if any, for this and all other standards can be accessed at the following URL: http://standards.ieee.org/reading/ieee/updates/errata/index.html. Users are encouraged to check this URL for errata periodically.

Interpretations

Current interpretations can be accessed at the following URL: http://standards.ieee.org/reading/ieee/interp/index.html.

Copyright © 2006 IEEE. All rights reserved.

Copyright The Institute of Electrical and Electronics Engineers, Inc.
Provided by IHS under license with IEEE
No reproduction or networking permitted without license from IHS
Not for Resale

Patents

Attention is called to the possibility that implementation of this standard may require use of subject matter covered by patent rights. By publication of this standard, no position is taken with respect to the existence or validity of any patent rights in connection therewith. The IEEE shall not be responsible for identifying patents or patent applications for which a license may be required to implement an IEEE standard or for conducting inquiries into the legal validity or scope of those patents that are brought to its attention.

Participants

At the time this standard was completed, the Rechargeable Batteries for Mobile Telephones Working Group had the following entity membership:

ASAHI KASEI CHEMICALS CORPORATION
BYD America
Celgard Inc.
China BAK Battery
E7 Technologies
Kyocera Wireless
LG Chem, Ltd.
LG Electronics, Inc.
Hitachi Maxell
Motorola, Inc.
Nokia Corporation
Panasonic
Raychem Circuit Protection, a unit of Tyco Electronics Corporation
Research in Motion
Samsung
SANYO Electric Co., Ltd.
Sony Corporation
Sprint Nextel
Superior Communications
Texas Instruments
Tianjin Lishen Battery Joint-Stock Co. Ltd.
U.S. Cellular
Verizon Wireless

The following members of the entity balloting committee voted on this standard. Balloters may have voted for approval, disapproval, or abstention.

ASAHI KASEI CHEMICALS CORPORATION
Kyocera Wireless
Motorola, Inc.
Nokia Corporation
Panasonic
Research in Motion
SANYO Electric Co., Ltd.
Sony Corporation
Tonen Chemical Nasu Co., Ltd.
Verizon Wireless

The working group gratefully acknowedges the contributions of the following organizations and participants. Without their assistance and dedication, this standard would not have been completed.

Organizations	*Participants*
Amperex Technology Limited	Anthony Wong
Argonne National Laboratory	Khalil Amine
ASAHI KASEI CHEMICALS CORPORATION	Satoru Yamaguchi
	Kentaro Sako
	Yoshifumi Nishimura
	Toshiyuki Furuyama
Battery Biz	Mark Vanstone
	Wasi Khursheed
Bourns	Tim Ardley
BYD America	Xiao Feng
	Chen Gang
	Robert Wang
	Michael He
	Mike Zhang
Broddarp	Ralph J. Brodd, *Technical Writer*
Cadex Electronics	Richard Janzen
Consumer Electronics Association	Virginia Williams
CTIA	Mark Sargent
	Susan T. Pollard
	Will S. Lightfoot
Celgard Inc.	John Zhang
Cetecom Inc.	Lothar Schmidt
China BAK Battery	Huanyu Mao
Cingular Wireless LLC	David Chapman
	Glen Scales
	Scott Prather

Copyright © 2006 IEEE. All rights reserved.

Copyright The Institute of Electrical and Electronics Engineers, Inc.
Provided by IHS under license with IEEE
No reproduction or networking permitted without license from IHS
Not for Resale

E7 Technologies	Bob Eagle
Federal Bureau of Investigation	Jonathan Hernandez
Entek Membranes	Robert Waterhouse
Exponent Failure Analysis Associates	Jan Swart
	Ashish Arora
ExxonMobil Chemical Company	Michael Lesniewski
Flextronics	Ed Decker
Gold Peak Industries	David Manis
	Doug Magnuson
Hewlett Packard	Mike Edwards
Hitachi Maxell	Hirotaka Shima
	Kazuo Mukai
Intersil	Joon Park
	Michael Coletta
	Lance Chandler
	Wyatt Foard
KERI	Seung-Wook Eon
Kyocera Wireless	Eddie Forouzan, *Secretary*
	Masoyoshi Nakajima
	Fred Leavitt
LG Chem, Ltd.	Jae-Sik Chung
	Eun-Young Oh
	Gerry Shin
	Soo-Ryoung Kim
	Danies Lee
	Joo Hwan Sung
	Sung Ryul Kwon
LG Electronics, Inc.	Kyuman Lee
	Soonwoo Allen Kwon
	Steven Yoon
LG Electronics Mobilecomm USA Inc.	Danny Jeong
Mobility Electronics, Inc.	Jeffrey Farnsworth
Motorola, Inc.	Jason Howard, *Chair*
	Carl Seaberg
	Micheal Austin
	John Copeland
	John Dunne
	Terry Goedken
	Russell Gyenes
	Wayne Penney
	Eric Sledge
NEC Tokin Corporation	Kazu Yamamoto
	Tetsuo Shirasu
Nokia Corporation	J. T. Guerin
	Ed Ehrlich
	Leo Fitzsimon
	Margaret Livingston
	Markus Aaltonen
	Markku Rajamaki
	Stan Scheufler
	Walt Tamminen
	Mika Kanninen
Panasonic	Charles P. Monahan
	Hideo Kaiya
	Joji Nishimura
	Shinichi Itoh
	Masunori Hamaguchi
	Takeshi Yao
	Take Ito
PCTest	Heng Te
	Randy Ortanez
	Channy Park
	Rene Sorra

Copyright © 2006 IEEE. All rights reserved.

Copyright The Institute of Electrical and Electronics Engineers, Inc.
Provided by IHS under license with IEEE
No reproduction or networking permitted without license from IHS
Not for Resale

Phihong	Dante De Guzman
	Keith Hopwood
Power Products	Barry Culbertson
Qualcomm	Mark Benton
	Eric Siegel
Quallion LLC	Hisashi Tsukamoto
	Paul M. Beach
Radio Shack	Pat Loehr
Raychem Circuit Protection, a unit of Tyco Electronics Corporation	Johnny Lam
	Like Xie
Research in Motion	Martin Guthrie
	Jonathan Brubacher
	Ryan Bayne
Samsung	Gordon Malterud
	Gary Hong
	Hyun D. Lee
	Ju Ho Song
	David Hwang
	Kendra M. Green
Samsung SDI	Ben Lim
	Jinuk Lee
SANYO Electric Co., Ltd.	Joseph Carcone
	Ali Pourfallah
	Joe Decarlo
	Hank Tsuda
	Larry Allen
	Takashi Hasegawa
	Ted Mi
	Toru Morioka
	Ian Ikegami
	Toru Amazutsumi
	Kaz Kobayashi
	Debbie Olson
Siemens	Milton A. Ponce de Leon
Sony Corporation	Koji Sekai
	Yosuke Kita
Sony Ericsson	Steven Coston
Sprint Nextel	Eric Jacks
	Gary Schick
	Khaled Azem
	Steve Dennett
Sunderland Wireless	John Sunderland
Superior Communications	Harry Mkhitarian
Texas Instruments	Todd Vanyo
	Upal Sengupta
Tianjin Lishen Battery Joint-Stock Co. Ltd.	George Thomas
Tonen Chemical Nasu Co., Ltd.	Kazuhiro Yamada
	Haruo Mizukami
T-Mobile USA	Gary Jones
U.S. Cellular	Michael Dore
	Ted Mahan
U.S. Consumer Product Safety Commission	Doug Lee
UTStarcom/Audiovox	Daniel McGuire
	Jim Papadopoulos
Valence Technology, Inc.	Ken Pierrehumbert
	Oliver Gross
Varta Microbattery	Martin Krebs
	J. Bremner
Verizon Wireless	Lou LaMedica, *Vice Chair*
	George Zysman
	Alan Wolfe
	Ted Hoffman

--`,,```,,,,````-`-`,,`,,`,`,,`---

Copyright © 2006 IEEE. All rights reserved.

Copyright The Institute of Electrical and Electronics Engineers, Inc.
Provided by IHS under license with IEEE
No reproduction or networking permitted without license from IHS

Not for Resale

When the IEEE-SA Standards Board approved this standard on 30 March 2006, it had the following membership:

Steve M. Mills, *Chair*
Richard H. Hulett, *Vice Chair*
Don Wright, *Past Chair*
Judith Gorman, *Secretary*

Mark D. Bowman
Dennis B. Brophy
William R. Goldbach
Arnold M. Greenspan
Robert M. Grow
Joanna N. Guenin
Julian Forster*
Mark S. Halpin
Kenneth S. Hanus
William B. Hopf
Joseph L. Koepfinger*
David J. Law
Daleep C. Mohla
T. W. Olsen
Glenn Parsons
Ronald C. Petersen
Tom A. Prevost
Greg Ratta
Robby Robson
Anne-Marie Sahazizian
Virginia C. Sulzberger
Malcolm V. Thaden
Richard L. Townsend
Walter Weigel
Howad L. Wolfman

*Member Emeritus

Also included are the following nonvoting IEEE-SA Standards Board liaisons:

Satish K. Aggarwal, *NRC Representative*
Richard DeBlasio, *DOE Representative*
Alan H. Cookson, *NIST Representative*

Michelle D. Turner
IEEE Standards Project Editor

Angela Ortiz
IEEE Standards Program Manager, Technical Program Development

Noelle D. Humenick
Client Services Manager

Copyright © 2006 IEEE. All rights reserved.

Copyright The Institute of Electrical and Electronics Engineers, Inc.
Provided by IHS under license with IEEE
No reproduction or networking permitted without license from IHS
Not for Resale

Contents

1. Overview ... 1

1.1 Introduction ... 1
1.2 Scope ... 1
1.3 Purpose ... 1

2. Normative references ... 2

3. Definitions ... 3

4. System integration considerations ... 6

4.1 Introduction ... 6
4.2 Subsystem requirements ... 7
4.3 Additional subsystem standards ... 8

5. Cell considerations ... 8

5.1 Introduction ... 8
5.2 Design process ... 8
5.3 General manufacturing considerations ... 12
5.4 Spiral winding and stacking process ... 13
5.5 Assembly precautions ... 14
5.6 Critical testing practices ... 16

6. Battery pack considerations ... 18

6.1 Introduction ... 18
6.2 Marking the battery pack ... 18
6.3 Battery pack considerations ... 19
6.4 External short-circuit considerations ... 20
6.5 Thermal protection ... 20
6.6 Overcharge considerations ... 20
6.7 Overdischarge considerations ... 21
6.8 Overcurrent considerations ... 21
6.9 Mechanical considerations ... 22
6.10 Connector/terminal considerations ... 23
6.11 Assembly considerations ... 23
6.12 Pack component care ... 24
6.13 Considerations for cells connected in parallel to form a battery pack ... 25
6.14 Critical testing practices ... 25

7. Host device considerations ... 27

7.1 Introduction ... 27
7.2 DC input voltage and current to the host device ... 27
7.3 Charging subsystem considerations ... 28
7.4 Multi-pack systems ... 30
7.5 ESD ... 30
7.6 Temperature specification ... 30
7.7 Battery pack qualification ... 30

--`,,```,,,,````-`-`,,`,,`,`,,`---

Copyright © 2006 IEEE. All rights reserved.

Copyright The Institute of Electrical and Electronics Engineers, Inc.
Provided by IHS under license with IEEE
No reproduction or networking permitted without license from IHS

Not for Resale

7.8 Electrical and mechanical connections between host and battery 30
7.9 Critical testing practices 32

8. AC/DC adapter, dc/dc adapter considerations 32

8.1 Introduction 32
8.2 Adapters 32
8.3 Charger considerations ac/dc charger, dc/dc charger (provides charge control directly to battery) 34
8.4 Critical testing practices 34

9. Total system reliability considerations 34

9.1 Introduction 34
9.2 User interactions and responsibilities 35
9.3 User alerts 35
9.4 Recommended communication to user 36
9.5 Marking and labeling 36

10. System security considerations 36

10.1 Introduction 36
10.2 Method of authentication 36
10.3 Purpose of authentication 37
10.4 Supply chain security 37

11. Validation 37

11.1 Introduction 37
11.2 Method 37
11.3 Design requirements 38
11.4 Quality system requirements 38
11.5 Process capability and process control requirements 38

Annex A (informative) Test methods for design verification 41

Annex B (informative) Failure mode and effects analysis (FMEA) techniques 53

Annex C (informative) System analysis considering two faults 55

Annex D (informative) Compliance validation process example 60

Annex E (informative) Environmental considerations 66

Annex F (informative) Bibliography 68

Copyright © 2006 IEEE. All rights reserved.

Copyright The Institute of Electrical and Electronics Engineers, Inc.
Provided by IHS under license with IEEE
No reproduction or networking permitted without license from IHS
Not for Resale

and Electronics Engineers, Inc.
IEEE
nitted without license from IHS
Not for Resale

IEEE Standard for Rechargeable Batteries for Cellular Telephones

1. Overview

1.1 Introduction

This standard guides manufacturers/suppliers in planning and implementing the controls for the design and manufacture of Li-Ion and Li-Ion polymer rechargeable battery packs used for mobile phones.

The provisions of this standard work together to define approaches to design, test, and evaluate a cell, battery pack, and host device to mitigate battery system failure. Additionally, this standard provides recommendations for user education and communication materials. This approach suggests the interfaces between subsystems (e.g., cell, battery pack, host device, and power adapter) and end users are as important to system reliability as is robust subsystem design and testing. This standard, therefore, includes subsystem interface design responsibilities for each subsystem manufacturer/supplier, and it provides messaging and communication provisions for end-user awareness. Therefore, the responsibility for total system reliability is shared between the designers/manufacturers/suppliers of the subsystems and the end user. Compliance to this standard requires adherence to all provisions of the standard.

1.2 Scope

This standard establishes criteria for design analysis for quality and establishes criteria for reliability of rechargeable Li-Ion and Li-Ion polymer batteries for mobile telephone applications. Also included in the standard are battery pack electrical and mechanical construction, packaging technologies, pack and cell level charge and discharge controls, and overall system considerations.

1.3 Purpose

The purpose of this standard is to ensure reliable user experience and operation of mobile phone batteries. The battery and mobile telephone industries need standardized criteria for design and qualification of rechargeable battery systems and for verifying the quality and reliability of those batteries.

Copyright © 2006 IEEE. All rights reserved.

Copyright The Institute of Electrical and Electronics Engineers, Inc.
Provided by IHS under license with IEEE
No reproduction or networking permitted without license from IHS
Not for Resale

CAUTION

This standard, and its accompanying annexes, provides no guarantee of protection or safety for battery users. This standard sets forth recommendations for design analyses and certain testing procedures. The level of assurance for protection and safety resulting from applying this standard depends on the implementation by the manufacturer/supplier and the actions of the end user. In the recommendations for design analyses contained herein, this standard contemplates reasonable intended use by the end user, but it does not provide a complete guarantee against hazards to the end user such as fire, explosion, and leakage.

2. Normative references

The following referenced documents are indispensable for the application of this Standard. For dated references, only the edition cited applies. For undated references, the latest edition of the referenced document (including any amendments or corrigenda) applies.

WARNING

Some tests specified herein can be dangerous to the persons carrying them out. All appropriate measures to protect personnel against possible chemical, thermal, and/or explosion hazards should be taken.

Battery Association of Japan, Guidance for Safe Usage of Portable Lithium-Ion Rechargeable Battery Pack, First Edition, March 2003.

IEC/TRF 60950-1, Edition 1.0, Information technology equipment—Safety—Part 1: General requirements (2002-01).[1]

IEC 61000-4-2, Electromagnetic Compatibility (EMC) Part 2-4 Environment—Compatibility Levels in Industrial Plants for Low Frequency Conducted Disturbances.

IEC 61960, Edition 1.0, Secondary cells and batteries containing alkaline or other non-acid electrolytes—Secondary lithium cells and batteries for portable applications.

IEC 62133, Edition 1.0, Secondary cells and batteries containing alkaline or other non-acid electrolytes—Safety requirements for portable sealed secondary cells, and for batteries made from them, for use in portable applications.

ISO 3864-1:2002 Graphical Symbols-Safety colors and safety Signs—Part 1: Design principles for safety signs in workplaces and public places, Revision 02.[2]

Recommendations on the Transport of Dangerous Goods, Manual of Tests and Criteria, Third revised edition, United Nations, New York and Geneva, 2002.[3]

Underwriters Laboratory Inc., UL 1310, Standard for Class 2 Power Units, May 3, 2005.[4]

[1]IEC publications are also available in the United States from the Sales Department, American National Standards Institute, 11 West 42nd Street, 13th Floor, New York, NY 10036, USA.

[2]ISO publications are available from the ISO Central Secretariat, Case Postale 56, 1 rue de Varembé, CH-1211, Genève 20, Switzerland/ Suisse (http://www.iso.ch/). ISO publications are also available in the United States from the Sales Department, American National Standards Institute, 25 West 43rd Street, 4th Floor, New York, NY 10036, USA (http://www.ansi.org/).

[3]United Nations publications are available on the World Wide Web at http://www.unece.org/.

Copyright © 2006 IEEE. All rights reserved.

Copyright The Institute of Electrical and Electronics Engineers, Inc.
Provided by IHS under license with IEEE
No reproduction or networking permitted without license from IHS Not for Resale

Underwriters Laboratories Inc., UL 1642, Lithium Batteries, 1995.

Underwriters Laboratory Inc. UL 2054, Household and Commercial Batteries, 2003.

Underwriters Laboratory Inc., UL 2089, Standard for Vehicle Battery Adapters, December 12, 2003.

Underwriters Laboratory Inc., UL 60950, Safety of Information Technology Equipment, December 11, 2000.

3. Definitions

For the purposes of this Standard, the following terms and definitions apply. *The Authoritative Dictionary of IEEE Standards Terms* [B9][5] should be referenced for terms not defined in this clause.

3.1 abuse: Use of product in a way that is not intended by the manufacturer/supplier but that may result from unreasonable or malicious human behavior or unreasonably extreme conditions or environments.

3.2 active authentication: A method of validation of a battery and/or accessory where the system makes the compatibility decision independent from the user. For example, the use of a secure memory device within the battery pack that communicates to the host that the pack is suitable for use with a specific OEM's mobile phone.

3.3 active charger: A charger that has a communication channel and interacts with the host device

3.4 adapter: A device that transforms the available power from an external source (e.g., ac wall outlet, airline, or automobile outlets.) to the power used by the host.

3.5 authentication: Any method of validation of a battery and/or accessory designed to ensure compatibility with a specific host device.

3.6 battery/battery pack: An assembly of any number of Li-Ion or Li-Ion polymer cells, associated electronics, battery packaging ,and connector(s).

3.7 burr: A sharp metallic projection at the edge of an electrode foil that may penetrate the separator and cause an internal short in a Li-Ion or Li-Ion polymer cell.

3.8 cause-and-effect (Fishbone) diagram: A branching, skeletal diagram used to illustrate cause and effect. Main branches are typically labeled "manpower, methods, materials, and machinery." This diagram is also known as an Ishikawa diagram.

3.9 cell: Basic manufactured Li-Ion or Li-Ion polymer unit providing a source of electrical energy by direct conversion of chemical energy that consists of electrodes, separators, electrolyte, container, and terminals, and that is designed to be charged electrically.

3.10 cell core: Internal cell assembly consisting of positive and negative electrodes integrated with separator. Electrodes and separator may be spirally wound ("jelly roll") or stacked ("cut and stack") in a planar arrangement.

[4]UL standards are available from Global Engineering Documents, 15 Inverness Way East, Englewood, Colorado 80112, USA (http://global.ihs.com/).

[5]The numbers in brackets correspond to those in the bibliography in Annex F.

Copyright © 2006 IEEE. All rights reserved.

Copyright The Institute of Electrical and Electronics Engineers, Inc.
Provided by IHS under license with IEEE
No reproduction or networking permitted without license from IHS Not for Resale

3.11 cell leakage: The appearance of the cell electrolyte outside the contained components. Leakage is evidenced by liquid or condensed electrolyte composition external to the cell on the cell surface.

3.12 charger: A device that imposes a voltage and current in the proper polarity on a cell or battery to return the battery to a higher state of charge.

3.13 charging algorithm: The set of rules and decisions used to determine the voltages and currents applied to the cell, cells, and/or battery pack as a function of time, temperature, or other parameters.

3.14 counterfeit batteries: Products that are intentionally labeled to mislead the purchaser of a battery. For example, the battery may be marked as being "genuine" or "approved for use" by a specific OEM.

3.15 critical: (**A**) Of, relating to, or being a turning point or an especially important juncture. (**B**) Relating to or being a state in which, or a measurement or point at which, some quality, property, or phenomenon suffers a definite change.[6]

3.16 design analysis: The evaluation of a design to determine correctness with respect to stated requirements, conformance to design standards, system efficiency, and other criteria, including consideration of system aging and usage over the life of the product.

3.17 electrostatic discharge (ESD): Electrical discharges of static electricity that build up on personnel or equipment generated by interaction of dissimilar materials. The discharge may damage sensitive components and render them inoperative.

3.18 failure mode: The manner in which failure occurs, generally categorized as electrical, mechanical, thermal, or contamination. It can be associated with a defect or use outside of specification.

3.19 failure mode and effects analysis (FMEA): A systematic group of cross-functional team activities whose purpose is to identify and evaluate the potential failure of a product (Design FMEA; DFMEA) or process (Process FMEA; PFMEA), and to ensure that such failure modes have been properly understood and prioritized for action. It includes evaluation of the severity of such failures, relative frequency of occurrence, and probability of detection and thus containment. The results of these activities are documented and updated as required.

3.20 fault: A physical condition that causes a device, a component, or an element to fail to perform in the required manner. Examples include short circuits, broken wires, and intermittent connections and software errors.

3.21 hazard: An undesirable result of one or more faults that includes a forceful rupture of the battery pack and/or projectile emission, fire, or flame outside of the battery enclosure; noticeable quantity of smoke; release of toxic, corrosive, or dangerous materials in excess of recognized health and safety standards; electric shock that exceeds accepted standards; systems or components generating untouchable surfaces; and leakage of liquid outside of the system enclosure.

3.22 host (host device): The device that is powered by a battery and/or charges the battery. Mobile phones are examples of a host device.

3.23 incompatible batteries: Battery products that do not meet the proper mechanical and/or electrical requirements for safe and reliable operation of the host device.

[6]Critical limits, critical steps, traceability plans, and so on may be considered to be critical design factors. Such parameters are determined by the manufacturer/supplier.

--`,,```,,,,````-`-`,,`,,`,`,,`---
Copyright © 2006 IEEE. All rights reserved.
Copyright The Institute of Electrical and Electronics Engineers, Inc.
Provided by IHS under license with IEEE
No reproduction or networking permitted without license from IHS
Not for Resale

3.24 intended use: Use of a product in accordance with specifications, instructions, and information provided by the manufacturer/supplier.

3.25 manufacturer/supplier: An entity that designs, assembles, and/or markets finished mobile telephones or cells, battery packs, and/or systems, as appropriate.

3.26 may: Indicates a course of action permissible within the limits of the standard. (adapted from Annex G of IEC 61000-4-2[7])

3.27 open circuit voltage (cell or battery pack) (V_{OC}): The voltage at its terminals when no appreciable current is flowing.

3.28 overcharge: The forcing of a current through a battery pack after it has been fully recharged. Overcharge may damage the normal operation of the cell or battery and/or induce a hazard.

3.29 overcurrent: The situation where the current to or from a cell or battery pack exceeds the manufacturer/supplier rating or specifications. Overcurrent may damage the normal operation of the cell or battery and/or induce a hazard.

3.30 overdischarge: The forcing of current through a battery pack after it has been fully discharged. Overdischarge may damage the normal operation of the cell or battery and/or induce a hazard.

3.31 overvoltage: The situation where the voltage of a cell or battery pack exceeds the manufacturer/supplier rating or specifications. Overvoltage may damage the normal operation of the cell or battery and/or induce a hazard.

3.32 passive authentication: A method of validation of a battery and/or accessory wherein the user makes the decision on the compatibility with the host device.

3.33 passive charger: A charger that does not have a communication channel with the host device

3.34 product lifetime: The actual period from initial operation to retirement of a system, structure, or component.

3.35 process control: The engineering discipline that deals with architectures, mechanisms, and algorithms for controlling the output of a specific process.

3.36 product life: The duration in which a consumer can use a product under normal user conditions. Within this product life, the battery shall provide a recoverable capacity as indicated in the battery information provided by the manufacturer/supplier.

3.37 positive temperature coefficient resistor (PTC): A component that has the characteristic of a sudden large increase in resistance when the device reaches a specified temperature and/or current.

3.38 reasonable and foreseeable misuse: Use of a product in a way that is not intended by the manufacturer/supplier but may result from reasonable and foreseeable human behavior.

3.39 shall: Indicates mandatory requirements strictly to be followed in order to conform to the standard.

NOTE—Equivalent definition of IEC Directive 61000-4-2: Shall = is to; is required to; it is required that; has to; only….is permitted; it is necessary.[8]

[7]Information on references can be found in Clause 2.

[8]Notes in text, tables, and figures are given for information only and do not contain requirements needed to implement the guide.

Copyright © 2006 IEEE. All rights reserved.

Copyright The Institute of Electrical and Electronics Engineers, Inc.
Provided by IHS under license with IEEE
No reproduction or networking permitted without license from IHS Not for Resale

3.40 shelf life: Duration of storage under specified conditions at the end of which a battery maintains its ability to give specified performance.

3.41 should: Indicates that among several possibilities, one is recommended as particularly suitable without mentioning or excluding others; or that a certain course of action is preferred but not necessarily required; or that (in a negative form) a certain course of action is depreciated but not prohibited.

NOTE—Equivalent definition of IEC: Should = is recommended that; ought to.

3.42 subsystem: A major portion or module that comprises the overall system. Examples of subsystems include, but are not limited to, cell, battery pack, host, interface electronics, and end user.

3.43 system: The combined cell, battery pack, host device, power supply or adapter, user, and environment.

3.44 vision system: Real-time inspection technique using a camera or other device (x-ray) that creates digitized information that is analyzed by a computer programmed to evaluate conformance to a mechanical template or dimension and/or color variations.

4. System integration considerations

4.1 Introduction

The scope of this clause sets forth provisions for conducting design analyses for cell, pack, host devices, and power adapters and an overall system-level design analysis of the combination of these, including the end user. The design analyses shall be conducted to reduce hazards (as defined in Clause 3) from occurring as a result of one or two independent faults while in intended use, depending on the scenario. The analysis shall consider two independent faults for charge and one fault for discharge and storage situations. The design analysis shall also be conducted to reduce hazards from occurring due to reasonable and foreseeable misuse.

Table 1 lists several different design analysis techniques that can be used. Conditions beyond reasonable and foreseeable misuse are outside the scope of this standard. Although design analyses should be thorough, it is not practical to address every conceivable scenario. Such an approach would prove onerous and unrealistic. Furthermore, cell design and manufacturing quality is fundamental to safe system design, as cell faults that create a hazard cannot be mitigated by external subsystems. To minimize hazards, there is no substitute for the use of high-quality cells manufactured in accordance with Clause 5.

Table 1—Examples of design analysis tools

Failure Mode Effects Analysis (FMEA)
Fault tree analysis
Empirical and/or destructive testing
Reviewing company service records for failure modes and/or trends
Cause-and-effect (Fishbone) analysis
Detailed and extensive design reviews
Reviews of prior design issues to ensure they are not repeated
Reviews of industry standards and test methodologies

Copyright © 2006 IEEE. All rights reserved.
Copyright The Institute of Electrical and Electronics Engineers, Inc.
Provided by IHS under license with IEEE
No reproduction or networking permitted without license from IHS
Not for Resale

The design analyses shall identify the following:

a) End-user responsibilities for reliable total system operation. See Clause 9 for information on the reliable total system operation.

b) Manufacturer/supplier responsibilities for independent and/or distributed control schemes for reliable total system operation.

In system design analysis, it is necessary to consider all system usage scenarios (charge, discharge, and storage) and the associated affected subsystems. An analysis shall be developed for cell, pack, host, charger, and accompanying accessories that are a part of the system, followed by an analysis that includes the interactions between the subsystems (see Figure 2).

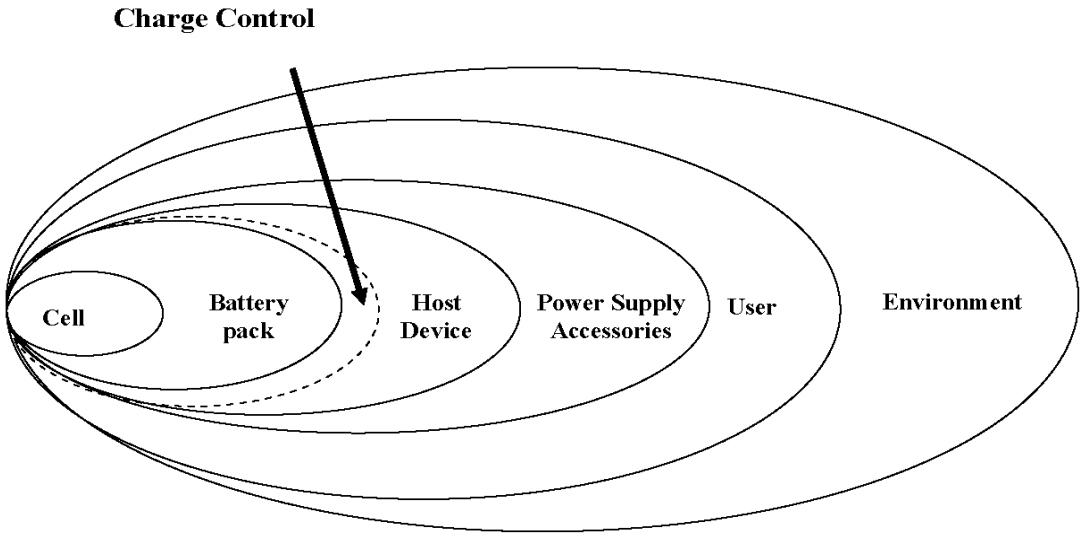

Figure 2—Schematic diagram of phone/battery/power supply system

4.2 Subsystem requirements

Subsystems shall meet the requirements of Table 2.

Table 2—Minimum subsystem requirements

System component	Specification
AC/DC adapter or charger	IEC/TRF 60950; or Appropriate safety standard of destination country
DC/DC adapter or charger	Appropriate safety standard of destination country
Battery pack	UN Manual of Tests and Criteria, Section 38.3 Lithium Batteries
Cell	UN Manual of Tests and Criteria Appropriate safety standard of destination country Pass all tests defined by UL 1642 for “User replaceable batteries”

Copyright © 2006 IEEE. All rights reserved.

Copyright The Institute of Electrical and Electronics Engineers, Inc.
Provided by IHS under license with IEEE
No reproduction or networking permitted without license from IHS
Not for Resale

4.3 Additional subsystem standards

In addition to requirements identified in 4.2, subsystems may also be tested to standards shown in Table 3.

Table 3—Other subsystem standards

System component	Specification
AC/DC adapter or charger	UL 60950 UL 1310
DC/DC adapter or charger	UL 2089
Battery pack	UL 2054
Battery pack	IEC 62133 IEC 61960-2
Cell	IEC 62133

5. Cell considerations

5.1 Introduction

The scope of this clause includes the precautions and considerations required for design, manufacturing, and testing of rechargeable Li-Ion and Li-Ion polymer cells over their product lifetime to minimize latent problems and increase reliable user experience. Manufacturers should make recommendations about temperature, current and voltage limits, and proper storage conditions and should establish shelf-life specifications to the pack manufacturer to ensure proper design of battery packs and host operation. Figure 3 depicts typical cell construction for cylindrical (Figure 3a), prismatic (Figure 3b), wound pouch Li-Ion polymer (Figure 3c), and stacked pouch Li-Ion polymer cells (Figure 3d).

5.2 Design process

The Li-Ion cell is the basic element that powers mobile phone operation. It is essential to pay close attention to the critical cell design factors to ensure reliable cell performance and avoid generation of a potential hazard.

5.2.1 Selection and characteristics of a separator material

The separator is a critical element in cell construction. It physically prevents internal short circuits inside the cell by separating the anode from the cathode and provides a path for ionic current flow inside the cell. It also has a safety function that shuts down ionic conductivity inside the cell if the cell temperature increases to abuse conditions. Examples of these functions are depicted in Figure 4a and Figure 4b.

5.2.1.1 Stability

The separator material shall have sufficient chemical, electrochemical, thermal, and mechanical stability to meet all safety performance requirements.

Copyright © 2006 IEEE. All rights reserved.
Copyright The Institute of Electrical and Electronics Engineers, Inc.
Provided by IHS under license with IEEE
No reproduction or networking permitted without license from IHS Not for Resale

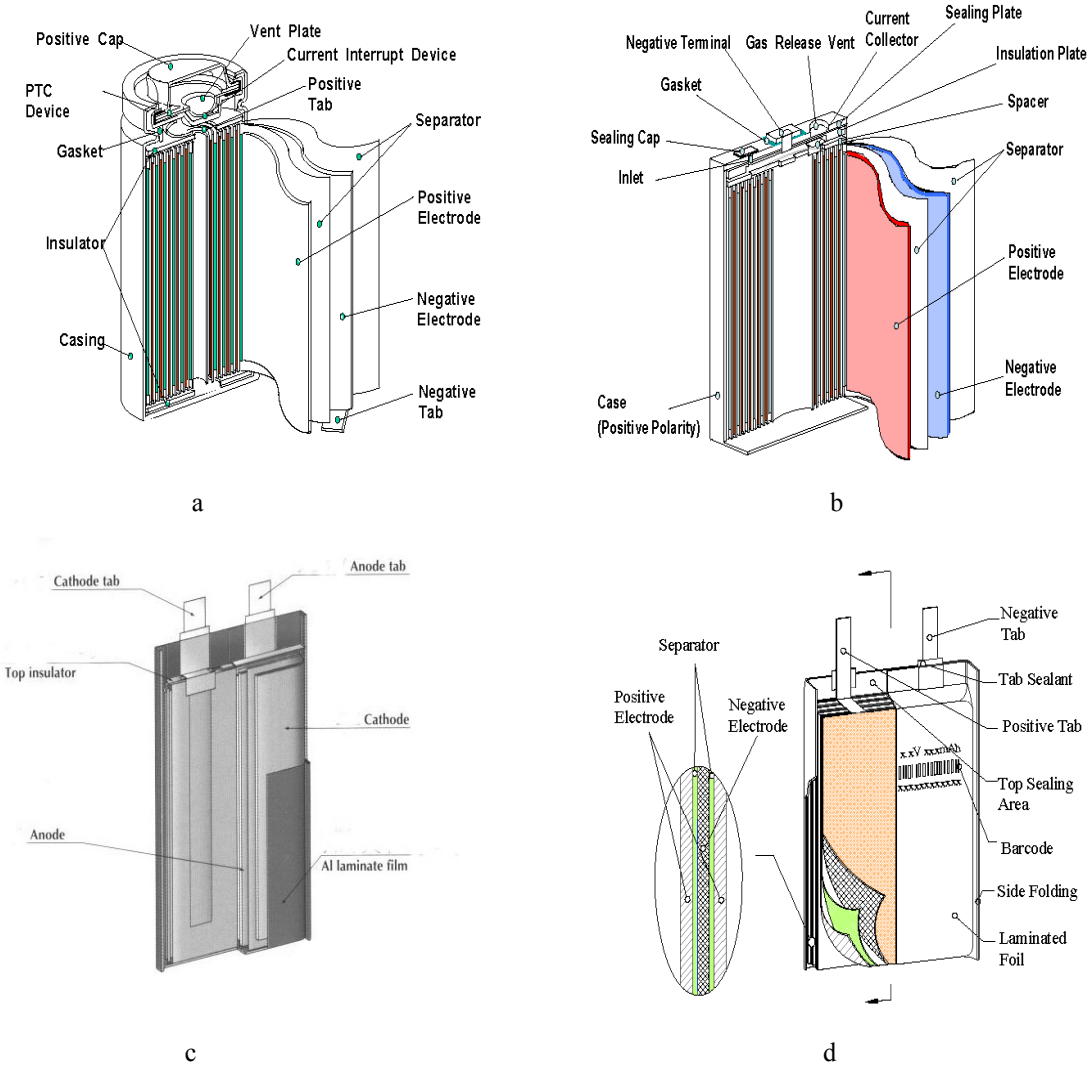

Figure 3—Examples of schematic construction of Li-Ion and Li-Ion polymer cells showing the important components: (a) cylindrical (Courtesy of Sanyo Electric Co., Ltd.), (b) prismatic (Courtesy of Sanyo Electric Co., Ltd.), (c) wound polymer (Courtesy of Sony Corporation), and (d) stacked polymer cell (Courtesy of Amperex Technology Limited)

5.2.1.2 Shutdown performance

The separator material should exhibit a rapid internal resistance increase (ionic conductivity shutdown) when cell temperature rises above its shutdown point. The separator should have a shutdown resistance increase of a minimum of two orders of magnitude at a minimum speed of 2000 $\Omega \cdot cm^2/s$ (for example, see Figure 4b). Shutdown resistance should be maintained for an adequate time period.

5.2.1.3 Isolation properties

The separator/cell design shall maintain adequate isolation properties up to 150 °C during a temperature excursion of at least 10 min in the cell to maintain safety of the cell.

Copyright © 2006 IEEE. All rights reserved.

Copyright The Institute of Electrical and Electronics Engineers, Inc.
Provided by IHS under license with IEEE
No reproduction or networking permitted without license from IHS
Not for Resale

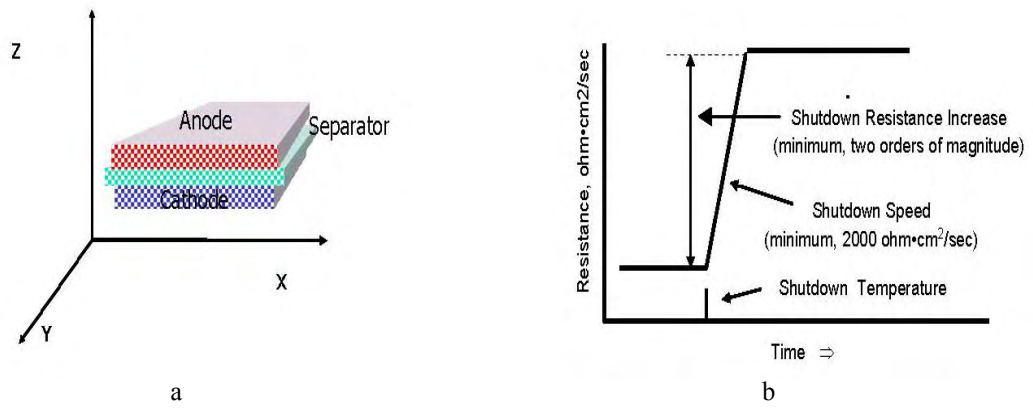

a b

Figure 4—Depiction of the separator (a) positioning, between the anode and cathode (Courtesy of Celgard Inc.) and (b) the speed and magnitude of change in resistance (shutdown function) on reaching a critical temperature (Courtesy of ASAHI KASEI CHEMICAL CORPORATION)

5.2.1.4 Strength and physical integrity

Selection of the thickness of the separator shall be made through design and validation. The separator material shall provide adequate strength in the z direction (normal to the electrode plane) to ensure cell safety performance (for example, see Figure 4a). The separator shall have sufficient physical integrity to withstand handling during the cell manufacturing process.

5.2.1.5 Shrinkage allowance

The area and width of the separator shall take into consideration allowances for separator shrinkage characteristics. The separator/cell design shall maintain adequate coverage of electrodes to meet cell safety requirements. At room temperature, the separator shall be designed to extend beyond the positive electrode and should extend beyond the negative electrode. Separator shall extend at least 0.1 mm beyond the positive electrode (plus process margin) unless process capability/stability is demonstrated to be less than 0.1 mm.

5.2.2 Electrode design criteria

Electrode design constituents for both the anode and the cathode shall be designed to assure performance, safety, and durability in the designated application. Design criteria shall specify material content, purity, and environmental factors that will enable the electrode material to support the manufacturing process and usage in the end application.

5.2.3 Electrode capacity balance and electrode geometry

The charge capacity of the negative electrode shall be greater than the positive electrode. The reversible capacity of the negative electrode shall be greater by at least 0.1% plus process tolerance.

The active area of the negative electrode shall completely cover the active areas of the positive electrode. The negative electrode shall be at least 0.1 mm wider (plus process margin) than the positive electrode on top and bottom of the cell unless process capability/stability is demonstrated to be less than 0.1 mm.

Copyright © 2006 IEEE. All rights reserved.
Copyright The Institute of Electrical and Electronics Engineers, Inc.
Provided by IHS under license with IEEE
No reproduction or networking permitted without license from IHS
Not for Resale

5.2.4 Electrode tabs (connection to cell terminals)

The manufacturer/supplier shall establish optimal tab length exposed beyond the top of the electrode for each cell and control to specific tolerance. Tabs shall not overhang the bottom of the electrodes. Figure 5a illustrates this principal.

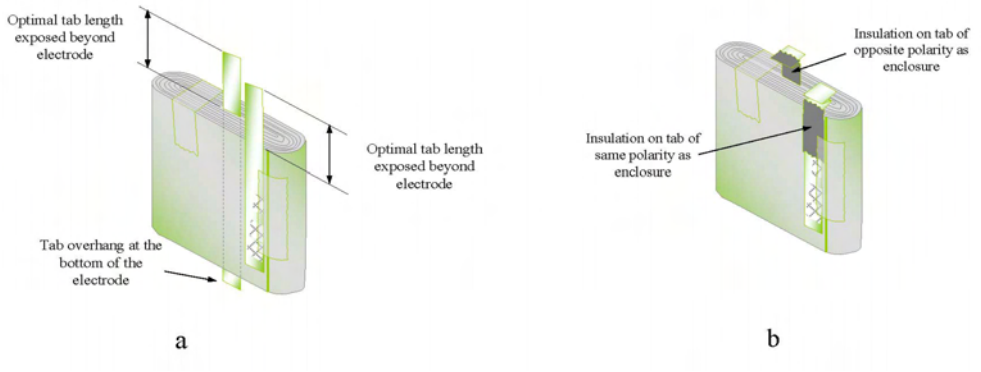

Figure 5—Cell core showing the tab positioning: (a) to demonstrate the optimum length for a particular cell design and (b) to demonstrate an example of positioning the tab insulation to prevent internal shorting of the electrodes

5.2.5 Tab insulation

This subclause includes requirements for tab insulation.

5.2.5.1 Application of insulation

The tab that has the opposite polarity as the enclosure shall be insulated where it exits the electrode assembly. Insulation shall continue until it reaches the point of attachment to the cell terminal. One embodiment of this principal is illustrated in Figure 5b. Insulation may be accomplished through one or more insulating schemes. If a tab is located where there is only a one-layer separator to isolate the opposite electrode, additional insulation shall be used, which may be additional layers of separator material or tape.

5.2.5.2 Insulation adherence

Insulation shall be permanently adhered and have good puncture resistance and may be opaque. Use of opaque insulators may be used to facilitate in-process inspection.

5.2.5.3 Insulation characteristics

Insulation material shall have electrochemical, chemical, mechanical, and thermal stability over the temperature range, –40 °C to 150 °C.

5.2.6 Cell vent mechanism

Cells shall be designed to include a consistent vent design or mechanism, for example, foil, edge, seam, or score.

5.2.6.1 Retention of cell contents

The vent mechanism shall be designed to minimize projectiles and maximize retention of cell contents.

Copyright © 2006 IEEE. All rights reserved.

Copyright The Institute of Electrical and Electronics Engineers, Inc.
Provided by IHS under license with IEEE
No reproduction or networking permitted without license from IHS
Not for Resale

5.2.6.2 Projectile testing

The cells shall pass the UL 1642 projectile test.

5.2.7 Overcurrent protection device

The manufacturer/supplier may employ an overcurrent protector (such as a PTC resistor or other protective measure) integrated or built into each cell to protect from hazards in the event of external short circuit and/or overcharge. If the cells are qualified per this standard using a PTC resistor or other protective measure, it shall be included in the cells used in the battery pack design and manufacture.

5.2.7.1 Maximum recommended voltage

The cell manufacturer shall provide a recommended maximum voltage for the appropriate pack overvoltage protection function.

5.3 General manufacturing considerations

5.3.1 Materials specifications

Materials specifications shall be developed to identify and limit impurities to levels below critical limits.

5.3.2 Impurity avoidance

All undesirable impurities in materials should be identified, specified, reduced to acceptable levels, and controlled throughout the manufacturing process.

5.3.3 Cleanliness of manufacturing operations

In the manufacturing environment, management of temperature, humidity, and impurity levels shall be specified, controlled, and monitored. Also, environmental management of materials, before and after the manufacturing process, shall be specified and monitored. The introduction of metal contamination from equipment or process shall be prevented.

5.3.4 Manufacturing traceability

The cell manufacturing process shall have a cell traceability plan. This plan should include methods by which traceability can be implemented at any date during product lifetime and after production to determine lot designation and performance data related to the cell. Use manufacturer's/supplier's specifications or documentation to ensure control of this criteria or process. Follow documentation requirements consistent with 11.4, and establish process capability and stability in accordance with 11.5.

5.3.5 Uniform coating of active materials

Coating weight, thickness, and uniformity of electrodes for the positive electrode and negative electrode shall be controlled within the tolerance set by cell specification. Use manufacturer's/supplier's specifications or documentation to ensure control of this criteria or process. Follow documentation requirements consistent with 11.4, and establish process capability and stability in accordance with 11.5.

5.3.6 Burr control

Burrs shall be controlled to prevent internal shorts. Follow documentation requirements consistent with 11.4, and establish process capability and stability in accordance with 11.5.

Copyright © 2006 IEEE. All rights reserved.
Copyright The Institute of Electrical and Electronics Engineers, Inc.
Provided by IHS under license with IEEE
No reproduction or networking permitted without license from IHS Not for Resale

Burrs shall not exceed 50% of the lower tolerance limit of the thickness of the separator unless documented engineering analysis (such as FMEA) shows that burr lengths with greater limits cannot cause internal shorts. Considerations may include, but are not limited to, coating thickness, separator thickness, coated vs. uncoated electrode areas, insulators, and electrode overlap.

5.3.7 Prevention of damage to electrodes

Wrinkling, tearing, and/or deformation of the electrodes should be prevented and eliminated. Manufacturer shall have an effective method for detecting wrinkling, tearing, and/or deformation of all electrode material. An automated vision system may be used for this purpose.

5.3.8 Characteristics of manufacturing equipment

The manufacturing equipment should be designed to prevent any damage or modifications to the cell during manufacturing operations. In-process quality controls shall be implemented to ensure consistent operation of the manufacturing equipment. Follow documentation requirements consistent with 11.4, and establish process capability and stability in accordance with 11.5.

5.3.9 Defective electrodes

All electrodes that fail to meet the primary specification shall be scrapped and shall not be used in the production of cells.

5.3.10 Preventive maintenance plan

Manufacturers shall maintain an effective preventive maintenance plan for all equipment used in the manufacturing processes.

5.4 Spiral winding and stacking process

All processes referenced in this subclause apply to assembly of the cell core by spirally wound jelly roll and/or other electrode separator combinations.

5.4.1 Care during winding and stacking

This subclause includes precautions to be followed during winding and stacking.

5.4.1.1 Tension and damage

The manufacturer/supplier shall use care during winding and/or stacking to avoid excessive tension and damage (twisting, bending, etc.) to the electrodes and the generation of loose particles.

5.4.1.2 Collection of loose material

Manufacturer shall have an effective method to collect all loose material produced. Methods may include vacuum, magnetic, and so on.

5.4.1.3 Detection of damaged cores

Manufacturer shall have a method to detect nonconforming cell cores. Methods may include high-voltage dielectric test (high-pot), voltage test, resistance/impedance test, and/or aging.

Copyright © 2006 IEEE. All rights reserved.

Copyright The Institute of Electrical and Electronics Engineers, Inc.
Provided by IHS under license with IEEE
No reproduction or networking permitted without license from IHS Not for Resale

5.4.2 Control of electrode spacing

The external dimensions of the cell core shall be adjusted to maintain uniform compression, dimensional characteristics, and no interference that can induce a burr or damage the cell core. The winding spindle removal process shall not damage the jelly roll. Use manufacturer's/supplier's specifications or documentation to ensure control of this criteria or process. Follow documentation requirements consistent with 11.4, and establish process capability and stability in accordance with 11.5.

5.4.3 Uniformity of internal electrode pressure

The cell core assembly process shall be properly adjusted to remain in the specified range to maintain uniform tension, compression, and dimensional characteristics, and to prevent interference that can induce a burr or damage the cell core or stack. Excessive tension shall be avoided to prevent deformation. Use manufacturer's/supplier's specifications or documentation to ensure control of this criteria or process. Follow documentation requirements consistent with 11.4, and establish process capability and stability in accordance with 11.5.

5.4.4 Avoidance of contaminants

The winding process shall prevent introduction of contaminants from the winding process (dust, flakes from electrodes) into the cell.

5.5 Assembly precautions

This subclause includes precautions to be followed during cell assembly.

5.5.1 Internal short avoidance

The method of assembly for insulating material, whether for electrode, current collectors, or internal insulation, shall be designed to provide reliable protection against latent shorts for the product lifetime of the cell.

5.5.2 Tab positioning

The position of negative and positive tabs shall be staggered so they do not overlap each other. Follow documentation requirements consistent with 11.4, and establish process capability and stability in accordance with 11.5.

Assembly process shall prevent deforming tab shapes in a manner that can create jelly roll damage or tab/can short circuits. For example, the insulated tab should be formed into a reproducible shape in such a way that the bent (S-bend typically) sides of the tab are isolated from the walls of the can. Alternatively, an insulator gasket may be included to isolate the tab from the jelly roll and can walls. Tabs positioning to the electrode stack specification should be confirmed by vision system inspection.

5.5.3 Integrity of cell/core stack

The integrity of wound or stacked electrodes shall be verified through resistance or a continuity check or equivalent means.

5.5.4 Positioning of insulating plate

If the cell has insulating plates, the insulating plates shall be properly positioned as shown in Figure 6. Insulating material shall be readily visible and should be checked to specification with resistive

Copyright © 2006 IEEE. All rights reserved.
Copyright The Institute of Electrical and Electronics Engineers, Inc.
Provided by IHS under license with IEEE
No reproduction or networking permitted without license from IHS Not for Resale

measurement or other technological means or methods. Use manufacturer's/supplier's specifications or documentation to ensure control of this criteria or process.

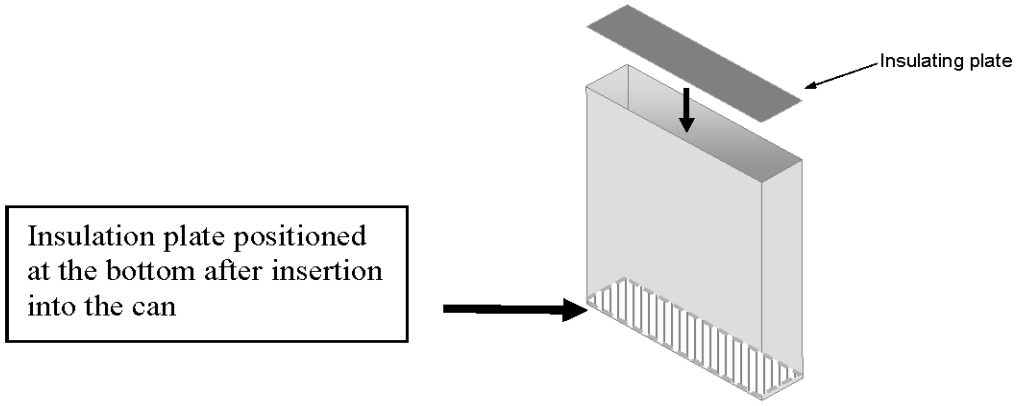

Figure 6—Positioning of the insulating plate in the bottom of the can to prevent internal shorting to the can

5.5.5 Electrode alignment

The proper alignment of positive and negative electrodes is critical to prevent hazards. The manufacturer/supplier shall assure the accuracy of electrode placement through cell design and machine operation to prevent electrode misalignment. The manufacturer/supplier shall conduct 100% inspection (post-winding or stacking of electrodes) and should use a vision system to inspect 100% of the electrode assemblies to assure that the overlap on top and bottom is at least 0.1 mm on each side unless documented process analysis justifies a lesser minimum overlap. Follow documentation requirements consistent with 11.4, and establish process capability and stability in accordance with 11.5.

5.5.6 Cell aging

The manufacturer/supplier shall develop and apply appropriate cell aging, grading, and/or sorting criteria for post-assembly screening of cells to identify and eliminate early failures and to identify weak cells. The manufacturer shall show the process is in control and shall identify and record any performance variations for each production lot. Follow documentation requirements consistent with 11.4, and establish process capability and stability in accordance with 11.5.

5.5.7 Validation of aging process

This test shall be conducted to validate a production aging and test process. This test shall be repeated after any significant design or process change.

Aging equations $n = 100$

$$\Delta V = V_{OC1} - V_{OC2} \tag{1}$$

$$\overline{\Delta V} = \frac{\sum_{i}^{n} \Delta V_i}{n} \tag{2}$$

Copyright © 2006 IEEE. All rights reserved.

Copyright The Institute of Electrical and Electronics Engineers, Inc.
Provided by IHS under license with IEEE
No reproduction or networking permitted without license from IHS
Not for Resale

$$\sigma_{\Delta V} = \sqrt{\frac{\sum_{i}^{n} (\Delta V_i - \overline{\Delta V})^2}{n-1}} \quad (3)$$

5.5.7.1 Testing procedures

The manufacturer shall randomly sample 100 cells of a given type from one day's production after completion of manufacturer's normal aging process.

The 100 cells are then fully charged according to the manufacturer's specification. Their V_{OC} shall be greater than 95% of the manufacturer's fully charged voltage specification. After one day of storage at room temperature, measure V_{OC1}, then soak the cells for one week at 45 °C, and return cells to room temperature for one day and measure the V_{OC2} for all cells.

Determine the average ΔV [Equation (2)] for all 100 cells where ΔV is the difference between the initial V_{OC} measured after one day of storage and the V_{OC} after soak and return to room temperature [Equation (1)].

5.5.7.2 Acceptance criteria of aging method

If the ΔV from 5.5.7.1 for any cell is greater than 4σ [Equation (3)] from the mean or if any cells leak, the manufacturer shall modify the aging and/or production process to meet the requirements of this subclause.

5.5.8 Cell leakage

The electrolyte leakage shall be inspected and leaking cells removed in the inspection process.

5.5.9 Care during cell assembly

There shall be no damage to the cell enclosure or cell case, and critical cell design elements, during welding and other operations. Use manufacturer's/supplier's specifications or documentation to ensure control of this criteria or process. Follow documentation requirements consistent with 11.4, and establish process capability and stability in accordance with 11.5.

5.6 Critical testing practices

Preproduction testing and production sampling should be extensive to confirm the design and production process. These testing procedures are not all inclusive. Tests are designed to confirm that the cells have the desired performance characteristics and are robust enough to resist abuse conditions should they arise.

5.6.1 Qualification of new cell designs

Verification of final product performance and design specification conformance should be conducted through accelerated test techniques and product inspection analysis.

New cell designs shall pass specified tests identified by the manufacturer/supplier before qualification as production cells. Use manufacturer's/supplier's specifications or documentation to ensure control of this criteria or process. Follow documentation requirements consistent with 11.4, and establish process capability and stability in accordance with 11.5. The design community shall incorporate and document all elements and criteria specified in the specification as part of their functional design activity. Important performance evaluation parameters include capacity, impedance, cycle life, dimensions, and voltage characteristics.

Copyright © 2006 IEEE. All rights reserved.
Copyright The Institute of Electrical and Electronics Engineers, Inc.
Provided by IHS under license with IEEE
No reproduction or networking permitted without license from IHS Not for Resale

5.6.2 Qualification of production cells

Production cells shall pass the qualification tests at specified intervals that the manufacturer/supplier specifies to maintain compliance with the manufacturer's/supplier's internal specification. The manufacturer's/supplier's specifications and documentation shall be made available as appropriate under general business terms and conditions to verify control of this criteria or process. Follow documentation requirements consistent with 11.4, and establish process capability and stability in accordance with 11.5. Important performance evaluation parameters include capacity, impedance, cycle life, dimensions, and voltage characteristics.

WARNING

Some tests specified herein can be dangerous to the persons carrying them out. All appropriate measures to protect personnel against possible chemical, thermal, and/or explosion hazards should be taken.

5.6.3 Standard tests for cells

There are several relevant cell testing standards. The manufacturer/supplier should be familiar with these standards and should use one or more of these standards as part of the testing process. In certain cases, compliance with all relevant standards may be necessary to meet regulatory requirements. Specifications that are relevant include UL 1642-1995 (including the revisions dated June 24, 1999 and October 25, 2004), UL 60950-2000 plus derivative standards, and IEC 62133.

5.6.4 Cell transportation regulations

The manufacturer/supplier shall comply with transportation regulatory testing requirements, including the appropriate sections of the UN Manual of Tests and Criteria.

5.6.5 Cell thermal test

Cells shall be fully charged per manufacturer's specification before testing. Cells shall be suspended (no heat transfer allowed to nonintegral cell components) at room temperature in a gravity convection or circulating air oven. The oven temperature shall be ramped at 5 °C ± 2 °C per minute to 130 °C ± 2 °C. After 1 h at 130 °C ± 2 °C, the test is ended. Cells shall not flame or explode when exposed to 130 °C for 1 h.

5.6.6 Evaluation of excess lithium plating

Production cells shall be cycled at 1C/1C charge/discharge conditions or maximum charge/discharge rate specified by the manufacturer at 25 °C for 25 cycles for the initial production lot and after all significant design changes.

5.6.6.1 Short-circuit test on cycled cells

The manufacturer/supplier shall perform the UL external short-circuit test at 55 °C on at least five cycled cells. Pass criteria: No fire, no explosion, and maximum temperature less than 150 °C.

5.6.6.2 Dissection of cycled cells

The manufacturer/supplier should dissect at least five cycled cells and verify the absence of lithium plating. Pass criteria: No excess lithium observed.

Copyright © 2006 IEEE. All rights reserved.

Copyright The Institute of Electrical and Electronics Engineers, Inc.
Provided by IHS under license with IEEE
No reproduction or networking permitted without license from IHS
Not for Resale

5.6.7 External shorting of cell terminals

Cells are first fully charged according to manufacturer's specifications. They shall not flame, explode, or exceed 150 °C when the terminals are shorted with 50 mΩ at ambient temperatures of 55 °C. A short is applied to a charged cell by connecting the positive (+) and negative (–) terminals with a total external resistance that shall be no more than 50 mΩ. The cells are to reach equilibrium at test temperature by remaining at 55 °C for at least 30 min and no longer than 60 min before the terminals are shorted.

NOTE—Test setup shall be designed so that shorting wire and resistor do not influence test through inadvertent heat transfer to cell or ignition of vented material.

Activation of a safety device integral to the cell may prevent hazards at this resistance. Therefore, testing must include resistances greater than 50 mΩ to assure compliance. Cells with external protective devices shall have protective device bypassed for this test.

6. Battery pack considerations

6.1 Introduction

The scope of this clause includes design analysis, manufacturing, and testing of rechargeable Li-Ion and Li-Ion polymer battery packs to ensure reliable performance over the product life of the mobile phone. The objective is to identify the considerations for the battery pack design, manufacture, and testing to reduce latent problems to a minimum and increase reliable user experience. This standard is limited to battery packs consisting of single Li-Ion cells or battery packs with multiple Li-Ion cells connected in parallel. Battery packs with cells connected in series are outside the scope of this standard.

6.2 Marking the battery pack

This subclause includes requirements for markings on the battery pack.

6.2.1 Traceability

Each manufacturer/supplier shall have a traceability plan. This traceability plan shall include provisions for traceability of a cell. Each battery pack should carry markings of the production lot and/or date code on the label or contain the information in the battery pack or memory.

6.2.2 External markings

Each battery pack shall carry external markings providing the following information in 6.2.2.1 through 6.2.2.4 at a minimum.

6.2.2.1 Part number

Name or part number of the battery pack.

6.2.2.2 Voltage

Typical voltage as rated by the manufacturers/suppliers of battery pack and/or cell(s). The maximum voltage as rated by the manufacturer/supplier of battery pack and/or cell(s) may be included.

Copyright © 2006 IEEE. All rights reserved.
Copyright The Institute of Electrical and Electronics Engineers, Inc.
Provided by IHS under license with IEEE
No reproduction or networking permitted without license from IHS
Not for Resale

6.2.2.3 Chemistry

The chemistry type of the battery.

6.2.2.4 Pack manufacturer/supplier identification

Name or identification code of the battery pack manufacturer/supplier.

6.2.3 Agency approvals

The battery pack should be certified in accordance with the rules and regulations of relevant and applicable regulatory organizations of the geographical region(s) where the battery pack will be sold. The battery pack may be marked with certification logos supplied/promoted by these safety organizations. For example, the battery pack may be marked with a CE and/or UL marking according to the rules/format of those organizations.

6.3 Battery pack considerations

This subclause includes important considerations for the design of the battery pack.

6.3.1 Leakage protection

The battery pack should be designed to mitigate hazards from contamination of electronic circuits by electrolyte if cells leak. These hazards include corrosion and damage to the control and/or safety circuitry. Possible methods to mitigate hazards may include encapsulation of the electronic circuitry, printed circuit layout and spacing of components, and mechanical orientation of the cell vents.

6.3.2 Circuit layout

To minimize the occurrence of an accidental short circuit, the design of the battery pack circuit board shall provide adequate runner spacing, soldering pad area size, and distance between solder pads as well as separation between traces.

6.3.3 Cell polarity

Individual unit cells in a battery pack shall be oriented with the proper polarity.

6.3.4 Ambient consideration

Temperature ranges shall consider ambient temperature as well as the effects of heat interactions among cell, battery pack, and host device when selecting the cells, components, and materials to be used. The entire pack/cell/host shall operate within the specifications of the manufacturer as in 6.5.1.

6.3.5 Component specifications

Cells, components, and materials used in the pack shall meet the minimum and maximum temperature requirements with adequate margin. Protection circuit components (excluding thermal devices designed to activate at specific temperatures) shall be rated for a minimum operating range of –25 °C to +85 °C.

6.3.6 Thermal consideration

Temperature ranges for operation shall be set based on the operating temperature ranges recommended by the cell manufacturer/supplier, battery pack manufacturer/supplier, and host device manufacturer/supplier.

Copyright © 2006 IEEE. All rights reserved.

Copyright The Institute of Electrical and Electronics Engineers, Inc.
Provided by IHS under license with IEEE
No reproduction or networking permitted without license from IHS Not for Resale

6.4 External short-circuit considerations

This subclause includes requirements for limiting output current and mitigating potential hazards from external short circuits.

6.4.1 Limit output current

The battery pack shall limit output current in the event of an external short circuit, whether the battery pack is installed in, or is outside of, the host device for user-removable battery packs.

6.4.2 Pack mechanisms

The battery pack shall have at least one method to limit current from cells independent of the cell separator shutdown mechanism. Methods to limit output current may include active or passive protective circuits.

6.5 Thermal protection

This subclause includes thermal protection requirements.

6.5.1 Thermal protection

Over-temperature protection shall be incorporated to prevent operation outside current, temperature, and/or time limits as agreed to by cell, battery pack, and host manufacturer/supplier. Operating temperature limits may be different during the charge and discharge phases. See 7.6 for additional details.

6.5.2 Thermal protection design

The battery pack or host shall contain at least one thermal protection device or mechanism independent of internal cell devices or mechanisms. A thermistor in the battery pack or host that is used to monitor cell temperature and forms part of a temperature protection circuit is considered a thermal protection mechanism. A thermistor, if used, shall adequately represent the temperature of the cell(s). For a thermistor-type temperature protection circuit, all packs of the same model shall have the same voltage to temperature translation (acceptable tolerance no more than ±10%), with consideration for any temperature lag over time.

6.5.3 Action

When temperature and time limitations are exceeded, action shall be taken to mitigate hazards. Action should include shutdown, or disabling of charging, or other protective action. The action may be taken by the battery pack and/or host.

6.6 Overcharge considerations

This subclause includes requirements for overcharge protection.

6.6.1 Charging specifications

The maximum charging voltage and current shall be set on the basis of an agreement made among the cell, battery pack, and host device manufacturers/suppliers and shall be based on the upper voltage and current limits of the cell, as specified by the cell manufacturer/supplier.

Copyright © 2006 IEEE. All rights reserved.
Copyright The Institute of Electrical and Electronics Engineers, Inc.
Provided by IHS under license with IEEE
No reproduction or networking permitted without license from IHS Not for Resale

6.6.2 Charge considerations

The combination of battery cell, battery pack, and host device/charger shall have at least one overcurrent protection function to meet the maximum current specified in 6.6.1. The need for redundant protection shall be included in the system analysis developed per Clause 4.

6.6.3 Charger design

The charging system shall be designed to limit the charging voltage and current to their maximum specified values, as specified in 6.6.1. The battery pack should include charging control circuitry or a device to prevent overcharging. Charging to a higher capacity and/or voltage than specified by the cell manufacturer can damage the cell. It can cause excessive heating and lead to a hazard.

6.6.4 Pack charge controllers

Charge control may be located in the battery pack.

6.6.5 Protection

The combination, consisting of cell, battery pack, and host device/charger, shall have at least two overcharge protection functions (e.g., active circuit and/or devices such as a thermal fuse, PTC, or thermostat). The pack should contain at least one of these two overcharge protection functions. (See Annex C for further information.)

At least one overcharge protection function method shall be the overvoltage protection mechanism in the pack or cell. The overvoltage mechanism in the battery pack or cell shall have the ability to withstand the maximum voltage from the host or system under a single fault condition.

6.7 Overdischarge considerations

This subclause includes considerations for overdischarge.

6.7.1 Specification

Any minimum discharge voltage and current should be set on the basis of an agreement made among the cell, battery pack, and host device manufacturers/suppliers and should be based on the lower voltage and current limits of the cell, as specified by the cell manufacturer/supplier.

6.7.2 Pack protection requirement

The battery pack may have an undervoltage protection circuit that disables battery discharge to the external system.

6.8 Overcurrent considerations

This subclause includes considerations for overcurrent.

6.8.1 Specification

Upper limit discharge current and time limitations shall be set on the basis of an agreement made among cell manufacturer/supplier, battery pack manufacturer/supplier, and host/system manufacturer/supplier.

Copyright © 2006 IEEE, All rights reserved.

Copyright The Institute of Electrical and Electronics Engineers, Inc.
Provided by IHS under license with IEEE
No reproduction or networking permitted without license from IHS Not for Resale

6.8.2 Pack overcurrent protection requirement

The battery pack shall have at least one overcurrent protect circuitry or devices designed to meet the specification in 6.8.1. The device may be an integral part of the cell.

6.8.3 Protection design

Overcurrent protection functions may include protection circuitry and devices, such as a fuse or a PTC resistor.

6.9 Mechanical considerations

The battery pack shall be designed to mitigate the effects of external mechanical force, including press, bend, twist, drop, vibration, and shock.

6.9.1 Cell considerations

Individual unit cells should be placed in the battery pack with considerations to include orientation, insulation, spacing, and other elements from the design analyses. Soft battery packaged cells (e.g., Li-Ion polymer) may require special mechanical considerations. The potential movement of cells inside the battery pack should be minimized.

6.9.2 Cell dimensional allowance

Allowances shall be made for cell and battery pack dimensional tolerance and changes throughout the product lifetime.

6.9.3 Cell isolation

Cells should be electrically insulated from each other to prevent unintended connections. Additional insulation may be required to supplement cell sleeving.

6.9.4 Electrical cell connections

Tabs, plates, and lead cables should be connected by welding and/or soldering to provide secure mechanical and electrical connections. Connections shall not be soldered directly to the cells.

6.9.5 Connection resilience

Appropriate spacing should be provided to prevent abrasion, wear, or damage to cable leads and/or connectors in the battery pack.

Appropriate strain relief should be provided for cable leads and/or connectors in the battery pack.

6.9.6 Damage resilience

Electrical parts should have appropriate clearance to allow for situations where the battery pack is deformed by external mechanical force.

6.9.7 Cell vent

Battery pack construction shall not prevent cell vent gasses from escaping.

--`,,```,,,,````-`-`,,`,,`,`,,`---
Copyright © 2006 IEEE. All rights reserved.
Copyright The Institute of Electrical and Electronics Engineers, Inc.
Provided by IHS under license with IEEE
No reproduction or networking permitted without license from IHS
Not for Resale

6.9.8 Circuit isolation

A circuit board in the battery pack, if used, should be mechanically isolated and secured to prevent unintended electrical connections.

6.10 Connector/terminal considerations

This subclause includes considerations for the connector/terminal between the battery pack and the host device.

6.10.1 Accidental short

The connector/terminal should be designed to reduce the possibility of an accidental short circuit. In the case of electrical connectors or bare terminals, they should be mechanically designed to prevent shorting by contact with common conductive objects, for example, coins, paper clips, and metallic pens. For example, battery packs may use recessed contacts, spacing of contacts, non-coplanar contacts, and so on. Conductive tabs are not recommended.

6.10.2 Host requirement

The connector/terminal shall adhere to host device mechanical considerations (see 7.8.3.1).

6.10.3 Other considerations

6.10.3.1 ESD

Specific electrostatic discharge (ESD) tolerance shall be included in the battery pack design, testing, and qualification. Test procedures described in IEC 61000-4-2 may be used.

6.10.3.2 Welding

Welding shall only be applied in areas designated by cell manufacturer/supplier in accordance with agreed upon specifications.

6.11 Assembly considerations

This subclause includes considerations for the assembly of the battery pack.

6.11.1 Cell shorts

Short circuit of the cells and battery packs shall be avoided.

6.11.2 Foreign objects

Contact of any foreign object to cell or protection circuit shall be avoided.

6.11.3 Soldering process

Adequate means shall be provided to prevent solder balls, solder flashes, solder bridges, and foreign debris. An example of an industry standard that may be applied is IPC 2221A [B9].

Copyright © 2006 IEEE. All rights reserved.

Copyright The Institute of Electrical and Electronics Engineers, Inc.
Provided by IHS under license with IEEE
No reproduction or networking permitted without license from IHS Not for Resale

6.11.4 Reworked cells

Cells salvaged from batteries that are recovered/returned from end users shall not be used to manufacture battery packs.

Reworked cells that are rewelded should not be used to manufacture battery packs without conducting proper analysis and verification showing that reprocessing does not compromise product specification found in 6.13.

6.11.5 Circuit care

Precautions shall be taken to avoid damage to protection devices and circuits.

6.12 Pack component care

Precautions shall be taken to avoid damage to conductors and insulators, for example, from sharp edges, burrs, pinching, or kinking.

6.12.1 Welding care

Precautions shall be taken to avoid damage to cells, protective circuit module, and battery pack during housing assembly (ultrasonic welding, over molding, etc.)

6.12.2 ESD

Precautions shall be taken to avoid damage to protection circuits and other devices from ESD during handling.

6.12.3 Pack testing during production

All protection circuit operations shall be directly or indirectly verified at the pack level. All shipped battery packs shall be tested/verified.

Indirect verification may be used if direct verification of a circuit function is not practical (such as undervoltage). These functions may be tested before final pack assembly, for example, at the protection circuit assembly level. Final pack level test should then verify critical circuit connections, thus indirectly verifying operation of the final assembly.

6.12.4 Quality control

Critical processes such as welding shall have a quality control and maintenance plan to control the consistency of the assembly process and adherence to specifications.

6.12.5 Cell care

There shall be no damage to cell enclosure or cell case and critical cell design elements during welding and other operations.

NOTE—Use standardized specifications or documentation to ensure control of this criteria or process. Follow documentation requirements consistent with 11.4 and establish process capability and stability in accordance with 11.5.

-`,,```,,,,````-`-`,,`,,`,`,,`---

 Copyright © 2006 IEEE. All rights reserved.

Copyright The Institute of Electrical and Electronics Engineers, Inc.
Provided by IHS under license with IEEE
No reproduction or networking permitted without license from IHS Not for Resale

6.13 Considerations for cells connected in parallel to form a battery pack

This subclause covers special considerations for battery packs containing multiple cells connected in parallel.

6.13.1 Specification

Cell specifications shall be considered per application for voltage, capacity, size, impedance, and other critical specifications. There shall be an agreement made among the cell, battery pack, and host device manufacturer/supplier as to the suitability of the cell selection and configuration.

6.13.2 Lot control

Cells should be from the same manufacturing lot as defined by the cell manufacturer.

6.13.3 Reworked cells

No reworked cells, including cells from recovered/returned packs should be used to manufacture battery packs.

6.13.4 Cell chemistry

No cells with significantly different electrochemical systems shall be used to manufacture battery packs.

6.13.5 Fault considerations

The manufacturer/supplier shall take adequate precautions to ensure that the charge rate does not exceed the maximum of any single cell in the event that the other cell(s) should become electrically disconnected.

6.14 Critical testing practices

Preproduction testing and production sampling should be extensive to confirm the design and production process. These testing procedures are not all inclusive. Tests are designed to confirm that the packs have the desired safety performance characteristics and are robust enough to resist abuse conditions should they arise.

6.14.1 Qualification of new pack designs

New pack designs shall pass specified tests identified by the manufacturer/supplier before qualification as a production pack. Use manufacturer/supplier's specifications or documentation to ensure control of this criteria or process. Follow documentation requirements consistent with 11.4 and establish process capability and stability in accordance with 11.5.

6.14.2 Qualification of production packs

Production packs shall pass the qualification tests at specified intervals that the manufacturer/supplier specifies to maintain compliance with the manufacturer's/supplier's internal specification. The manufacturer's/supplier's specifications and documentation shall be made available, as appropriate under general business terms and conditions, to verify control of this criteria or process. Follow documentation requirements consistent with 11.4 and establish process capability and stability in accordance with 11.5.

Copyright © 2006 IEEE. All rights reserved.

Copyright The Institute of Electrical and Electronics Engineers, Inc.
Provided by IHS under license with IEEE
No reproduction or networking permitted without license from IHS Not for Resale

WARNING

Some tests specified herein can be dangerous to the persons carrying them out. All appropriate measures to protect personnel against possible chemical, thermal, and/or explosion hazards should be taken.

6.14.3 Other standards

There are several relevant battery testing standards. Manufacturer/suppliers should be familiar with these standards and should use one or more of these standards as part of their testing process. In certain cases, compliance with one or more of these standards may be necessary to meet regulatory requirements. Relevant standards include UL 2054, UL 60950, IEC/TRF 60950-1, IEC 61960, IEC 62133, and the UN Manual of Tests and Criteria.

6.14.4 Battery transportation regulations

The manufacturer/supplier shall comply with transportation regulatory testing requirements including the appropriate sections of the UN Manual of Tests and Criteria.

6.14.5 Pack overvoltage protection, verification, and testing

The following test procedure in 6.14.5.1 shall be used to verify that the proper voltage protection exists in the battery pack.

6.14.5.1 Validation of maximum voltage protection

The purpose of the following test is to determine whether hazards occur when cells are charged up to the maximum limit of the battery's overcharge protection function as defined in 6.6.5. Cell manufacturer shall provide a recommended maximum voltage for the appropriate overvoltage protection function.

6.14.5.1.1 Insulation during testing

Cells shall be insulated during charge testing to prevent cooling to ambient temperatures and to simulate battery assembly and environmental conditions. Cells shall be completely insulated using one layer of fiberglass batting, approximately 4 cm (1.5 in) thick with a thermal resistance of approximately 0.88 $m^2 \cdot K/W$ (R value of 5 $ft^2 \cdot °F \cdot h/Btu$). The batting should be compressed 30% to 50% when applied to the cell.

6.14.5.1.2 Testing ambient

Testing shall be conducted at room temperature on fully discharged cells per the manufacturer's/supplier's specification (typically, 3.0 V).

6.14.5.1.3 Temperature measurement

A thermocouple shall be attached to the side of the cell (longitudinal axis of cylindrical cells and largest continuous surface for prismatic cells).

6.14.5.1.4 Maximum test condition

The testing shall be performed using a constant current-constant voltage method. Testing shall be conducted at the maximum voltage limit of the overcharge protection function and the maximum current capability of the system when charge control is not functioning.

Copyright © 2006 IEEE. All rights reserved.
Copyright The Institute of Electrical and Electronics Engineers, Inc.
Provided by IHS under license with IEEE
No reproduction or networking permitted without license from IHS
Not for Resale

6.14.5.1.5 Accuracy of current and voltage control

The test setup shall be capable of controlling the voltage to ±10 mV and current to ±10 mA at the cell. During the test, the cell is initially charged at a constant current. Cell voltage increases with time during this step. When the cell voltage reaches the voltage limit, the cell continues to be charged at that voltage value while the current decays.

6.14.5.1.6 Test termination

The test shall be continued until at least one of the following conditions is met:

a) Cell failure (flame, explosion or temperatures exceeding 150 °C).

b) Current flow is lower than 50 mA, and cell temperature descends to within 10 °C of room temperature.

c) Total test time of 24 h is reached.

6.14.5.1.7 Pass criteria

Cell shall not flame, explode, or exceed 150 °C.

6.14.6 Pack drop test

For user replaceable batteries, five packs shall be fully charged according to manufacturer's specifications. Packs are allowed to stand for 1 h, and open circuit voltage is measured and recorded before testing. Each pack shall be drop tested from a height of 1.5 m (5 ft) onto a smooth concrete surface 18 times (three repetitions of six sides) with no temporary internal shorts causing a total voltage decrease of more than 0.010 V open circuit voltage, no heating, no smoke, no fire, and/or no leakage. Testing shall continue up to 36 times (a total of six repetitions of six sides) with no permanent internal shorts causing a voltage decrease to 75% or less of the initial open circuit voltage measured 1 h after completing the drop test.

For non-user replaceable packs (embedded batteries), this test shall be conducted either on batteries or on batteries installed in the host device.

7. Host device considerations

7.1 Introduction

The scope of this clause includes considerations to include in the analysis of designing, manufacturing and testing of host devices for use with rechargeable Li-Ion and Li-Ion polymer battery packs over their product lifetime. The objective is to identify the considerations for the host system design to reduce latent problems and to enhance reliable user experience. Certain requirements of Clause 6 may be met by incorporating the appropriate function in the host device rather than the battery pack. Host device manufacturer/suppliers should be familiar with Clause 6 and verify that the appropriate system level functions are expected to reside in the host, pack, or cells.

7.2 DC input voltage and current to the host device

This subclause includes requirements for dc current and voltage input to the host device.

Copyright © 2006 IEEE. All rights reserved.

Copyright The Institute of Electrical and Electronics Engineers, Inc.
Provided by IHS under license with IEEE
No reproduction or networking permitted without license from IHS
Not for Resale

7.2.1 Input

Each host device should be marked with, or otherwise indicate, the specified input voltage range and the maximum current for the system. The host device shall not allow damaging power surges and transients from the input to propagate to the battery pack. Specific surge and transient limits shall be included in the system design specifications.

7.2.2 Overvoltage

The host device shall be designed to indefinitely withstand the maximum voltage from the adapter, under a single fault condition, to prevent a cascading failure through the system to the battery pack and/or cell.

The maximum input voltage specification should consider the potential use of unqualified, mechanically compatible adapters.

7.2.3 Overcurrent

The host device or system shall ensure that the battery is not charged with a current greater than the maximum charge current specified by the battery manufacturer.

7.2.4 Fault isolation and tolerance

If the system design allows overvoltage or overcurrent (under a single fault event) to propagate to the battery pack, Clause 4 requires that the pack shall withstand this overvoltage and/or overcurrent.

The host device or system may isolate the input connection from the rest of the system if the dc input voltage and/or current exceeds specified values, plus certain tolerance. The tolerance should be decided by the system manufacturer(s)/supplier(s).

7.3 Charging subsystem considerations

7.3.1 Safety

The charging system, or any part of the host device, shall not disable or override the safety features inside the battery pack(s).

7.3.2 Pack identification

An identification scheme shall be employed so that the host device can identify the type of battery pack present in the system. At a minimum, identification scheme shall communicate or indicate the maximum charge voltage. If the battery pack cannot be properly identified, charge shall be terminated. Discharge may be terminated. In addition to an identification scheme, a mechanical interlock that will impede the installation of an improper pack should be incorporated as well.

7.3.3 Algorithm verification

The charging subsystem shall identify the type of battery pack and execute the correct charging algorithm based on the identification information provided by the battery pack. The charging system shall not charge the pack above the maximum charge current and voltage conditions as specified by the pack manufacturer/ supplier.

Copyright © 2006 IEEE. All rights reserved.
Copyright The Institute of Electrical and Electronics Engineers, Inc.
Provided by IHS under license with IEEE
No reproduction or networking permitted without license from IHS Not for Resale

7.3.4 Precharge

A precharge algorithm may be applied to a low voltage or low state of charge battery pack to activate a controller/host.

7.3.5 Timer fault

If the host is in a charging state for a time period exceeding the system specification, the host shall stop charging. The system should support a maximum charging time-out function for each stage in the normal charge process, post-precharge.

7.3.6 Communication fault

In charging subsystems that employ an electronic communications interface with the battery pack, the system shall disable charging if communication fails.

The controller may receive periodic update information from the battery pack. If the battery pack fails to provide the periodic update, the controller shall notify the host to stop charging after a predetermined period. The period between updates and the number of updates dropped before a fail condition is reached is determined by the system manufacturer/supplier.

7.3.7 Temperature validation

The charging system shall monitor the battery temperature before, and during, the charging process. If the temperature is out of range, the system shall suspend charging.

7.3.8 Voltage range validation

The system shall check initial battery voltage and shall take appropriate action, as follows in 7.3.8.1 through 7.3.8.4.

7.3.8.1 Initiation of charging above specified voltage threshold

The system shall not initiate charge if the battery voltage is above a threshold defined by the battery manufacturer/supplier.

7.3.8.2 Initiating of charging below voltage threshold

The system shall not initiate normal charging if the battery voltage is below a threshold defined by the battery manufacturer/supplier. In this case, the system may support a precharge function to bring the battery voltage above the required threshold. For example, a lower charge current than normally specified may be applied.

7.3.8.3 Overdischarge protection

If the host incorporates a battery discharge capability, the host shall ensure that the battery is not over-discharged, as defined by the battery manufacturer’s specifications.

7.3.8.4 Repeated fault

The system should disable charging and discharging of a specific battery pack if a repeated fault that could compromise the safe operation of the system is identified.

--`,,```,,,,````-`-`,,`,,`,`,,`- Copyright © 2006 IEEE. All rights reserved.

Copyright The Institute of Electrical and Electronics Engineers, Inc.
Provided by IHS under license with IEEE
No reproduction or networking permitted without license from IHS Not for Resale

7.4 Multi-pack systems

The following considerations in 7.4.1 and 7.4.2 shall be applied to a host device with multiple battery packs.

7.4.1 Requirements

In multi-battery pack systems, the requirements in 7.2.3 shall apply to each battery pack independently.

7.4.2 Charging battery packs

The system shall not allow a battery pack to directly charge another battery pack in a multi-battery pack system without the use of an appropriate charging subsystem.

7.5 ESD

Specific ESD tolerance shall be included in the system design, testing, and qualification. Test procedures described in IEC 61000-4-2 may be used.

7.6 Temperature specification

The system shall incorporate temperature limitations as agreed to by cell, battery pack, and host manufacturer/supplier. The system shall initiate action to maintain temperature within specifications. Some examples of actions that may be taken include shutting down the system, reducing power consumption, suspending battery charging, or reducing charging current.

7.7 Battery pack qualification

The system should include a method for determining whether the battery pack has been qualified with the system per this standard. The system may take action if an unqualified battery is detected. Actions may include terminating charge and/or discharge, changing the charging profile, modifying system performance, and/or notifying the end user.

7.8 Electrical and mechanical connections between host and battery

This subclause includes considerations for connectors in the host device.

7.8.1 Mechanical considerations

This subclause includes mechanical considerations for connections between the host and battery.

7.8.1.1 Mating of pins

The host device and battery connections shall mate properly and be capable of good electrical contact throughout their respective product lifetimes.

7.8.1.2 Pin separation

Power and ground pins shall be sufficiently separated to minimize the possibility of an accidental short circuit between those two pins.

--`,,```,,,,````-`-`,,`,,`,`,,`---

Copyright © 2006 IEEE. All rights reserved.

Copyright The Institute of Electrical and Electronics Engineers, Inc.
Provided by IHS under license with IEEE
No reproduction or networking permitted without license from IHS Not for Resale

7.8.1.3 Pin polarity

The system shall allow the battery to be inserted only with the correct polarity.

7.8.2 Conductor ratings

The conductors and connectors shall have the proper current rating for the current load with adequate margin as determined by the system manufacturer/supplier. Multiple power pins should be used to support the current load, if required.

7.8.3 Robustness

This subclause includes requirements for the robustness of the host/battery connector.

7.8.3.1 Connector strength

The host connector to the battery shall be mechanically robust.

7.8.3.2 Performance over expected life

The host device connector shall be able to withstand insertions and removals without damage over the expected lifetime of the system.

7.8.4 Insertion consideration for electrical circuits

“Smart batteries” may require host connector pins to have the proper mating sequence to prevent latch up in devices or damage to pack components. The ground pin or power/ground pins should be the first to make contact before all other pins.

7.8.5 Metallurgy consideration

The host device battery connector pin metallurgy shall be compatible with the battery connector pin metallurgy to minimize corrosion and resistance changes over the life of the system. (See IEC/TRF 60950-1, Annex J.)

7.8.6 Mating force

Adequate mechanical force between the electrical contact points shall be maintained to minimize any fretting or other electrical degradation of the contact.

7.8.7 Shock and vibration

The host device shall withstand shock and vibration caused by normal usage and shall not propagate faults to the battery pack and cells, when they are installed in the system.

7.8.8 Foreign objects

Precautions shall be taken to minimize the potential for foreign objects and/or liquids to enter the host device and cause a short circuit either during the manufacturing process or the end-user operation.

Copyright © 2006 IEEE. All rights reserved.

Copyright The Institute of Electrical and Electronics Engineers, Inc.
Provided by IHS under license with IEEE
No reproduction or networking permitted without license from IHS Not for Resale

7.9 Critical testing practices

Preproduction testing and production sampling should be extensive, to confirm the design and production process. These testing procedures are not all inclusive. Tests are designed to confirm that the hosts have the desired safety performance characteristics and are robust enough to resist abuse conditions should they arise. Testing and verification shall include all system design criteria in 7.2 through 7.5. (See Annex B for suggested methods to address specific system functions and attributes.)

7.9.1 Qualification of new host device designs

New host device designs shall pass specified tests identified by the manufacturer/supplier before qualification as a production host. Use manufacturer/supplier's specifications or documentation to ensure control of this criteria or process. Follow documentation requirements consistent with 11.4, and establish process capability and stability in accordance with 11.5.

7.9.2 Qualification of production host devices

Production host devices shall pass the qualification tests at specified intervals that the manufacturer/supplier specifies to maintain compliance with the manufacturer's/supplier's internal specification. The manufacturer's/supplier's specifications and documentation shall be made available as appropriate under general business terms and conditions, to verify control of this criteria or process. Follow documentation requirements consistent with 11.4, and establish process capability and stability in accordance with 11.5.

8. AC/DC adapter, dc/dc adapter considerations

8.1 Introduction

The scope of this clause includes all power adapters that provide the energy for battery charging but do not directly charge the battery. Adapters provide dc input to a host charging device. Examples include linear power supplies, switch-mode power supplies, vehicular power adapters, and auxiliary power sources (rechargeable and non-rechargeable).

8.2 Adapters

This subclause includes the general requirements for adapters.

8.2.1 Adapter requirements

The adapter shall meet the input requirements of the supported host charging device.

8.2.2 Adapter and safety features

The adapter shall not disable or degrade the safety features of the supported host device. The device interface should prevent reverse polarity connection.

8.2.3 Adapter ESD requirements

Specific ESD tolerance shall be included in the charging system design, testing, and qualification. Test procedures described in IEC 61000-4-2 may be used.

Copyright © 2006 IEEE. All rights reserved.
Copyright The Institute of Electrical and Electronics Engineers, Inc.
Provided by IHS under license with IEEE
No reproduction or networking permitted without license from IHS Not for Resale

8.2.4 Adapter–charger interface

The adapter–charger interface shall meet the following safety requirements or regulations in 8.2.4.1 through 8.2.4.7.

8.2.4.1 Mating of adapter and charger

The adapter and charger connections shall mate properly and be capable of good electrical contact throughout their respective useful lives.

8.2.4.2 Separation of pins

Power and ground pins shall be sufficiently separated to minimize the possibility of an accidental short circuit between those two pins and shall be polarized to ensure that the connection can only be made with the proper polarity.

8.2.4.3 Electrical compliance

Adapters that are powered by ac mains shall comply with all electrical safety requirements of the country of destination. Compliance to this requirement may be shown through the use of standards such as IEC/TRF 60950-1.

8.2.4.4 Current ratings

The conductors and connectors shall have the proper current rating for the current load with adequate margin as determined by the adapter manufacturer/supplier. Multiple power pins should be used to support the current load if required.

8.2.4.5 Pin metallurgy

The adapter connector pin metallurgy shall be compatible with the charger connector pin metallurgy to reduce corrosion and resistance changes over the life of the system. (See IEC/TRF 60950-1, Annex J.)

8.2.4.6 Adapter–charger reliability

The adapter–charger connector shall be able to withstand insertions and removals without damage over the expected lifetime of the adapter.

8.2.4.7 Shock and vibration effects

The adapter shall withstand shock and vibration caused by normal usage and shall not propagate faults to the charger, battery pack, or cells, when installed.

8.2.5 Adapter and foreign objects

Precautions shall be taken to minimize the potential for foreign objects and/or liquids to enter the adapter and cause a short circuit either during the manufacturing process or the end-user operation.

8.2.6 Adapter marking and traceability requirements

Each manufacturer/supplier shall have a traceability plan, and each adapter shall carry markings of the production lot and/or date code on the label.

Copyright © 2006 IEEE. All rights reserved.

Copyright The Institute of Electrical and Electronics Engineers, Inc.
Provided by IHS under license with IEEE
No reproduction or networking permitted without license from IHS
Not for Resale

8.3 Charger considerations ac/dc charger, dc/dc charger (provides charge control directly to battery)

The scope of this subclause is all charging devices external to the host phone that directly charge the battery. Examples include desktop chargers and smart power supplies. If not otherwise specified, the responsibility for defining specific charger design requirements is incumbent on the charger manufacturer. Furthermore, the charger manufacturer shall comply with the battery pack manufacturer's specifications for all supported batteries.

Chargers shall meet the requirements of Clause 7 and 8.2.

8.4 Critical testing practices

Preproduction testing and production sampling to confirm the design and production process should be extensive. These testing procedures are not all inclusive. Tests are designed to confirm that the adapters have the desired safety performance characteristics and are robust enough to resist abuse conditions should they arise. Testing and verification shall include all system design criteria in 8.2 and 8.3. (See Annex B for suggested methods to address specific system functions and attributes.)

8.4.1 Qualification of new adapter designs

New adapter designs shall pass specified tests identified by the manufacturer/supplier before qualification as a production adapter. Use manufacturer's/supplier's specifications or documentation to ensure control of this criteria or process. Follow documentation requirements consistent with 11.4, and establish process capability and stability in accordance with 11.5.

8.4.2 Qualification of production adapters

Production adapter shall pass the qualification tests at specified intervals that the manufacturer/supplier specifies to maintain compliance with the manufacturer's/supplier's internal specification. The manufacturer's/supplier's specifications and documentation shall be made available as appropriate, under general business terms and conditions, to verify control of this criteria or process. Follow documentation requirements consistent with 11.4, and establish process capability and stability in accordance with 11.5.

9. Total system reliability considerations

9.1 Introduction

The scope of this clause includes required and recommended information to be communicated to the user and methods to identify and explain user responsibility (for example, owner's manual, printed labels for the host device and battery pack, host device messages, and help files) to ensure a reliable user experience. Figure 7 shows how the battery cell, battery pack, host device, and end user work together synergistically for total system reliability. The user shares in several areas of responsibility for total system reliability, as identified during system design analysis.

--`,,```,,,,````-`-`,,`,,`,`,,`---

Copyright © 2006 IEEE. All rights reserved.

Copyright The Institute of Electrical and Electronics Engineers, Inc.
Provided by IHS under license with IEEE
No reproduction or networking permitted without license from IHS Not for Resale

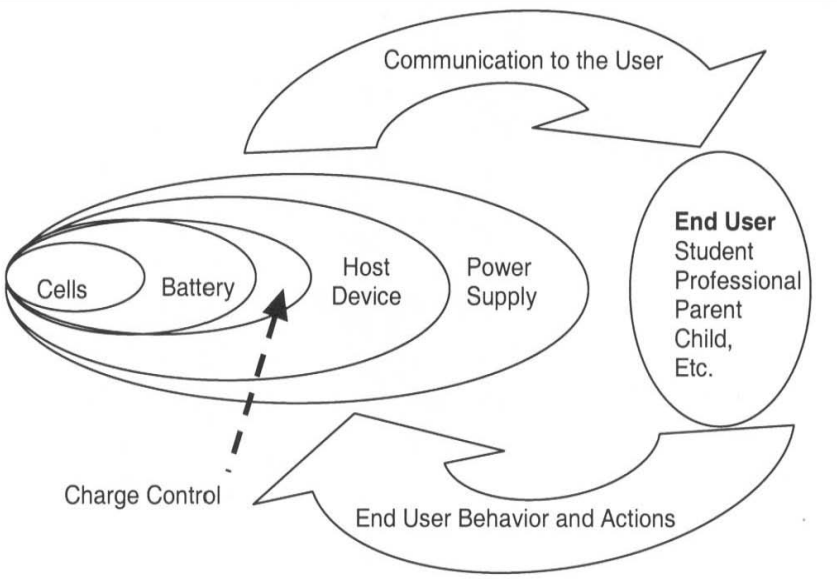

Figure 7—Depiction of the interaction between the mobile telephone and the user

9.2 User interactions and responsibilities

The following information, or equivalent statements, shall be made available to the user through one or more of the following means, as appropriate: printed on the label for the battery, printed on the label for host device, printed in the owner's manual, or posted in a help file or Internet website:

a) Do not disassemble or open, crush, bend or deform, puncture, or shred.

b) Do not modify or remanufacture, attempt to insert foreign objects into the battery, immerse or expose to water or other liquids, or expose to fire, explosion, or other hazard.

c) Only use the battery for the system for which it was specified.

d) Only use the battery with a charging system that has been qualified with the system per this standard. Use of an unqualified battery or charger may present a risk of fire, explosion, leakage, or other hazard.

e) Do not short circuit a battery or allow metallic or conductive objects to contact the battery terminals.

f) Replace the battery only with another battery that has been qualified with the system per this standard. Use of an unqualified battery may present a risk of fire, explosion, leakage, or other hazard.

g) Promptly dispose of used batteries in accordance with local regulations.

h) Battery usage by children should be supervised.

i) Provide an explanation of security implementation, per 10.2.1.

j) Avoid dropping the phone or battery. If the phone or battery is dropped, especially on a hard surface, and the user suspects damage, take it to a service center for inspection.

k) Improper battery use may result in a fire, explosion, or other hazard.

9.3 User alerts

The following indications, notifications, and dialog/messages, at the system level, or an equivalent statement, may be displayed along with recommended actions as appropriate:

a) Abnormal battery temperature alert.

Copyright © 2006 IEEE. All rights reserved.

Copyright The Institute of Electrical and Electronics Engineers, Inc.
Provided by IHS under license with IEEE
No reproduction or networking permitted without license from IHS
Not for Resale

b) Abnormal host device and/or battery dc input voltage alert.

c) Abnormal current draw alert.

d) Battery communication fail/time-out alert.

e) Incompatible battery alert.

f) Alert for other malfunctions that may lead to hazards.

9.4 Recommended communication to user

The following information should be provided to the end user:

a) In the event of a battery leak, do not allow the liquid to come in contact with the skin or eyes. If contact has been made, wash the affected area with large amounts of water and seek medical advice.

b) Seek medical advice immediately if a battery has been swallowed.

c) Communicate the appropriate steps to be taken if a hazard occurs.

9.5 Marking and labeling

Recognized international symbols may be used in place of text where appropriate. Manufacturer/supplier may also consult other relevant industry standards in Clause 2. (See 6.2.2 for mandatory battery pack label and marking requirements.) Additional information may be provided as appropriate, such as ISO 3864-1:2002.

10. System security considerations

10.1 Introduction

The scope of this clause provides procedures to authenticate the compatibility of batteries or other subsystems for use with specific systems. Use of incompatible subsystems could potentially create a hazard. This clause suggests various methods for verification, but the final decisions are left to the manufacturer/supplier.

10.2 Method of authentication

This subclause covers considerations for authentication methods.

10.2.1 Host and battery authentication

There shall be a method of authentication that ensures compatibility between a specific host device and the battery. Authentication method should be active, but it may be passive as defined in Clause 3.

10.2.2 Implementation by manufacturer/supplier

There are multiple methods of implementing authentication in a system. The specific method of authentication to be implemented is left to the discretion of the system's manufacturer/supplier.

10.2.3 Authentication of accessories

The use of authentication mechanisms, as described in 10.2.1 and 10.2.2, should also be considered for other external accessories such as charging power sources, charging docks/cradles, and USB interface devices.

Copyright © 2006 IEEE. All rights reserved.
Copyright The Institute of Electrical and Electronics Engineers, Inc.
Provided by IHS under license with IEEE
No reproduction or networking permitted without license from IHS Not for Resale

10.3 Purpose of authentication

The purpose of implementing authentication mechanisms in a system is to prevent or restrict the use of incompatible or counterfeit batteries. Authentication mechanisms do not specifically prohibit the use of compatible third-party accessories but may restrict their functionality with the mobile phone.

10.4 Supply chain security

This subclause includes requirements for supply chain security.

10.4.1 Ensuring supply chain security

Manufacturers/suppliers shall be responsible for ensuring that their products, subsystems, or components (security devices, cells, etc.) do not enter the supply chain inappropriately and shall be responsible for setting up a process to ascertain that supply chain security is fulfilled by periodic audits.

10.4.2 Avoiding defective parts

Manufacturers/suppliers shall be responsible that their products, subsystems, or components that have been found defective do not enter the supply chain inappropriately and shall be responsible for setting up a process to ascertain that the above process is fulfilled by periodic audits.

10.4.3 Battery pack identification

The manufacturer shall have means of identification within a battery pack to allow verification by the manufacturer of the battery pack and cells. Examples of these methods include, but are not limited to, design features such as chemical or dye tags incorporated in the physical structure of the battery pack housing, non-flammable labeling, imprinted cell enclosures, or some other internal means of identifying the cell/pack source if the external housing is destroyed.

11. Validation

11.1 Introduction

The scope of this clause encompasses guidelines for the overall process by which products and associated processes are validated against this standard. Additionally, normative guidance is provided on quality system compliance and process characterization and control requirements.

Annex D provides an example implementation of these qualification guidelines.

11.2 Method

This subclause covers the method for validation.

11.2.1 Compliance

Compliance should be based on three categories of evaluation, as follows in 11.2.1.1 through 11.2.1.3.

Copyright © 2006 IEEE. All rights reserved.

Copyright The Institute of Electrical and Electronics Engineers, Inc.
Provided by IHS under license with IEEE
No reproduction or networking permitted without license from IHS Not for Resale

11.2.1.1 Testing

For those defined product design aspects, quantitative product testing should be employed using the test processes defined in this standard. All test results should meet the minimum criteria defined for passing the tests.

11.2.1.2 Design analysis

For those product-design aspects that cannot be clearly defined, qualitative design analysis should be employed.

11.2.1.3 System and process audits

For those process aspects defined in the standard, system and process auditing should be employed.

11.2.2 Certification

Compliance to this standard can be validated using self-certification, third-party verification, or any combination of the two. The specific method is left to the discretion of the involved parties (i.e., purchaser and seller).

11.2.3 Requalification

Retest is required when any system component is modified such that the reliability or safety of the system component may be impacted.

11.3 Design requirements

11.3.1 Component requirements

For a design to be considered compliant to this standard, all system components used in a design shall be compliant to this standard. As an example, for a battery pack to be compliant, the intended component cell (or cells) must also be compliant to this standard.

11.3.2 Responsibility for compliance

It is the responsibility of the entity intending on claiming compliance of their device to ensure that all subordinate defined components of the system are compliant to this standard.

11.3.3 Record keeping

Records defining compliance shall be maintained by the vendor of record. The specific format of such records is not specified.

11.4 Quality system requirements

Manufacturer/supplier shall maintain compliance with a suitable quality system standard that meets the requirements of ISO 9000:2000 [B10] or the latest revision.

11.5 Process capability and process control requirements

Subclauses 11.5.1 through 11.5.7 are provided in the recommended order of implementation.

Copyright © 2006 IEEE. All rights reserved.
Copyright The Institute of Electrical and Electronics Engineers, Inc.
Provided by IHS under license with IEEE
No reproduction or networking permitted without license from IHS
Not for Resale

11.5.1 Definition of safety critical variables

The manufacturer/supplier shall define and document both product and process variables that relate to product safety, which are referred to as safety critical variables, herein.

11.5.2 Definition of critical measurement processes

The manufacturer/supplier shall define and document the critical measurement processes that are used to assess the safety critical variables noted in 11.5.1.

11.5.3 Confirmation of critical measurement process capability

The manufacturer/supplier shall assess and document measurement process capability for the critical measurement processes defined in 11.5.2 through appropriate measurement systems analysis (MSA) techniques such as gage repeatability and reproducibility studies (GR&R) and attribute gage studies. In conjunction with MSA, the manufacturer/supplier shall ensure that the measurement equipment used has the requisite precision, calibration, resolution, and so on. Using the results of the MSA studies, the manufacturer/supplier shall ensure that such critical measurement processes are sufficiently capable of making the intended measurement.

11.5.4 Confirmation of process stability

The manufacturer/supplier shall verify that safety critical processes are stable over time. Process stability is defined as the removal of all special cause variation such that the process output is statistically predictable. A typical technique for assessing process stability is process monitoring and analysis using appropriate control charts with industry accepted statistical control tests.

11.5.5 Confirmation of process capability

Once process stability has been achieved, the manufacturer/supplier shall assess process capability for all safety critical processes, which is typically done through process capability analysis based on a statistically significant sample size (usually greater than 50 samples) taken over time, and evaluation of the resulting process capability metrics such as Cp, Cpk, Cpu, Cpl, and Cpm. Note also that in addition to verification of process stability and having sufficient sample sizes, other aspects such as the underlying distribution of the data and the method by which it was taken (proper sampling procedures) should also be verified. Furthermore, the manufacturer/supplier shall ensure that such safety critical processes are sufficiently capable of producing the intended product.

11.5.6 Process monitoring and reaction to out-of-control events

The manufacturer/supplier shall document and implement appropriate process control on safety critical processes to maintain the stability of the process and to alert the responsible personnel, should an out-of-control (OOC) situation occur. Should an OOC event occur, the manufacturer/supplier shall ensure that the event is documented, it is properly investigated, and the results of that investigation are documented.

Note that an OOC event does not always imply that something is wrong, only that there is a high likelihood that something about the process has changed. This change can be positive or negative, but it requires investigation, regardless. It is frequently the case that positive changes, such as an abnormally low defect rate, can be misleading in that the manufacturing process did not change, but a problem has occurred with the measurement method being used for process control.

Copyright © 2006 IEEE. All rights reserved.

Copyright The Institute of Electrical and Electronics Engineers, Inc.
Provided by IHS under license with IEEE
No reproduction or networking permitted without license from IHS Not for Resale

11.5.7 Process improvement actions

The manufacturer/supplier shall document and implement a process improvement strategy for safety critical processes to further enhance the capability of the process, thus positively impacting the expected field performance of the design.

Copyright © 2006 IEEE. All rights reserved.
Copyright The Institute of Electrical and Electronics Engineers, Inc.
Provided by IHS under license with IEEE
No reproduction or networking permitted without license from IHS Not for Resale

Annex A

(informative)

Test methods for design verification

A.1 Introduction

This Informative Annex describes test methods that may be used for design verification for cells (Clause 5), battery packs (Clause 6), and host devices (Clause 7). In ad

dition, an example of a charge algorithm is included for Clause 7.

A.2 Comparison of design verification tests

Table A.1 is a comparison of the suggested methods from various standard organizations to address design verification of specific functions and attributes of the cells discussed in Clause 5. These specific test procedures and requirements are designed to confirm that the cells have the desired performance characteristics and can withstand certain abuse conditions.

Table A.1—Comparison of cell testing standards

	UL 1642	IEC 62133 Edition 1.0	UN Manual of Tests and Criteria
Title	Lithium batteries.	"Secondary cells and batteries containing alkaline or other non-acid electrolytes—Safety requirements for portable sealed secondary cells, and for batteries made from them, for use in portable applications."	Report of Committee of Experts on the Transport of Dangerous Goods.
(1) Continuous charge test (Electrical)		<Procedure> 20 °C ± 5 °C, discharged cell Hold at manufacturer's specified end-of-charge voltage for a total period of 28 days.	
(2) Short circuit (Electrical)	<Procedure> Fully charged sample. 20 °C ± 5 °C and +55 °C ± 2 °C. Short circuit with a maximum resistance load of 0.1 Ω.	<Procedure> Fully charged cell. 20 °C ± 5 °C and +55 °C ± 2 °C Short circuit with a total external resistance less than 100 mΩ. Should have maximum temperature limit. The cells shall remain on test for 24 h or until the case temperature declines by 20% of the maximum temperature rise, whichever is sooner.	<Procedure> Test 5 Cell and battery sample. 55 °C ± 2 °C Short circuit with a total external resistance 0.1 Ω for 1 h.

Copyright © 2006 IEEE. All rights reserved.

Copyright The Institute of Electrical and Electronics Engineers, Inc.
Provided by IHS under license with IEEE
No reproduction or networking permitted without license from IHS
Not for Resale

Table A.1—Comparison of cell testing standards *(continued)*

	UL 1642	IEC 62133 Edition 1.0	UN Manual of Tests and Criteria
(3) Abusive overcharge/ abnormal charge (Electrical)	<Procedure> At ambient temperature, fully discharged sample. Connected in opposition to dc-power supply, charging with three times Ic current (specified by manufacturer), for 7 h or the time required to reach the manufacturer's specified end-of-charge condition, whichever is greater.	<Procedure> 20 °C ± 5 °C Fully discharged cell Power supply ≥ 10 V Charge current = I_{rec} Time (hours) =$2.5C_5/I_{rec}$ I_{rec} = recommended constant current charge in amperes specified by the manufacturers.	
(4) High rate charge (Electrical)		<Procedure> 20 °C ± 5 °C Fully discharged cell Charge by the current of three times the recommended charge current, I_{rec} The cell shall be 100% charged unless an internal protective device functions to cut the charge current and full charge is not possible.	
(6) Vibration (Mechanical)	<Procedure> Fully charged sample. At ambient temperature, Amplitude: 0.8 mm, 1 Hz/min, between 10 Hz and 55 Hz in three mutually perpendicular directions (two directions for two axes of symmetry).	<Procedure> Fully charged cell. At 20 °C ± 5 °C, Amplitude: 0.76 mm, total maximum excursion of 1.52 mm. 1 Hz/min to 0.055 Hz/min between 10 Hz and 55 Hz Three mutually perpendicular directions (two directions for two axes of symmetry) Should have 90 min + 5 min per axis.	<Procedure> Test 3 Cell or battery sample. Amplitude: 0.8 mm, 7 Hz ~ 200 Hz (15 min) cycle shall be repeated 12 times Three mutually perpendicular directions.
(7) Shock test (Mechanical)	<Procedure> Fully charged sample. At 20 °C ± 5 °C, Peak acceleration: 125g ± 175*g* (minimum average acceleration during the initial 2 ms; 75*g*) Three shocks of equal magnitude for three mutually perpendicular directions. (two directions for two axes of symmetry).	<Procedure> Fully charged cell. 20 °C ± 5 °C, Peak acceleration: 125 ± 175 g_n (minimum average acceleration during the initial 3 ms: 75 g_n) Three shocks of equal magnitude for three mutually perpendicular directions. (two directions for two axes of symmetry).	<Procedure> Test 4 Cell or battery sample. Peak acceleration:150 g_n Pulse duration 6 ms Three shocks of equal ± magnitude for three mutually perpendicular directions. Total of 18 shocks. For large cells and batteries, peak acceleration: 50 g_n Pulse duration: 11 ms Three shocks of equal ± magnitude for three mutually perpendicular directions. Total of 18 shocks.

Copyright © 2006 IEEE. All rights reserved.
Copyright The Institute of Electrical and Electronics Engineers, Inc.
Provided by IHS under license with IEEE
No reproduction or networking permitted without license from IHS
Not for Resale

Table A.1—Comparison of cell testing standards *(continued)*

	UL 1642	IEC 62133 Edition 1.0	UN Manual of Tests and Criteria
(8) Free fall (Mechanical)		<Procedure> 20 °C ± 5 °C, fully charged cell Drop three times from 1.0 m onto a concrete floor to obtain impacts in random orientations.	
(9) Crush test (Mechanical)	<Procedure> At ambient temperature, a fully charged sample is to be crushed between two flat surfaces to apply a force approximately 13 kN so that the longitudinal axis of the cell shall be parallel to flat surface. Once the maximum pressure has been obtained, it is released. For prismatic cells, this test is repeated with a fresh cell rotated 90 degrees about its longitudinal axis.	<Procedure> 20 °C ± 5 °C, fully charged cell is to be crushed between two flat surfaces to apply a force approximately 13 kN so that the longitudinal axis of the cell shall be parallel to flat surface. The test is stopped once the maximum pressure has been obtained, or an abrupt voltage drop of one third of the original voltage has been obtained.	
(10) Impact test (Mechanical)	<Procedure> At ambient temperature, a fully charged sample is to be placed on a flat surface. A 15.8 mm Φ bar is to be placed across the center of the battery. A 9.1 kg weight is to be dropped from a height of 610 mm ± 25 mm onto the sample.		<Procedure> Test 6 Cell or component cell is to be placed on a flat surface. A 15.8 mm Φ bar is to be placed across the center of the battery. A 9.1 kg weight is to be dropped from a height of 61 cm ± 2.5 cm onto the sample.
(11) Altitude simulation/Low pressure (Environmental)	<Procedure> Fully charged sample. 20 °C ± 3 °C, 11.6 kPa for 6 h.	<Procedure> Fully charged cell. 20 °C ± 5 °C, 11.6 kPa for 6 h.	<Procedure> Test 1 Cell or battery 20 °C ± 5 °C. 11.6 kPa for 6 h.

--`,,```,,,,````-`-`,,`,,`,`,,`---
Copyright © 2006 IEEE. All rights reserved.

Copyright The Institute of Electrical and Electronics Engineers, Inc.
Provided by IHS under license with IEEE
No reproduction or networking permitted without license from IHS
Not for Resale

Table A.1—Comparison of cell testing standards *(continued)*

	UL 1642	IEC 62133 Edition 1.0	UN Manual of Tests and Criteria
(12) Thermal shock or Temperature cycling (Environmental)	<Procedure> Fully charged samples. In a test chamber and subjected to the following cycles: a) 70 °C ± 3 °C for 4 h b) 20 °C ± 3 °C for 2 h c) –40 °C ± 2 °C for 4 h d) 20 °C ± 3 °C e) Repeating step a) to step d) nine cycles f) After 10th cycle, storing the samples for a minimum 24 h at 20 °C ± 5 °C before examination. Test temperature has to be achieved within 30 min and maintained for this duration.	<Procedure> Fully charged cell. In a test chamber and subjected to the following cycles: a) 75 °C ± 2 °C for 4 h b) 20 °C ± 5 °C within 30 min for 2 h c) –20 °C ± 2 °C within 30 min for 4 h d) 20 °C ± 5 °C within 30 min for 2 h e) Repeating step a) to step d) four cycles f) After 5th cycle, store the cells for 7 days before examination.	<Procedure> Test 2 Cell or battery. 6 h at +75 °C ± 2 °C and 6 h at –40 °C ± 2 °C Repeat 10 times followed by storage at least 24 hours at +20 °C ± 5 °C For large cells and batteries, the soak time is increased from 6 h to 12 h.
(13) Thermal exposure or Heating Test (Environmental)	<Procedure> Fully charged sample 130 °C ± 2 °C for 10 min (temperature increase rate: 5 °C ± 2 °C/min). The sample shall return to room temperature.	<Procedure> Fully charged cell 130 °C ± 2 °C for 10 min (temperature increase rate: 5 °C ± 2 °C/min).	
(15)Projectile test (Environmental)	<Procedure> Fully charged sample is to be placed on a steel wire mesh screen covered by an aluminum wire cage and burned by burner.		

Copyright © 2006 IEEE. All rights reserved.
Copyright The Institute of Electrical and Electronics Engineers, Inc.
Provided by IHS under license with IEEE
No reproduction or networking permitted without license from IHS
Not for Resale

A.3 Battery pack design verification tests

Table A.2 illustrates suggested methods to address design verification of specific functions and attributes of the battery packs discussed in Clause 6. These specific test procedures and requirements are designed to confirm that the cells have the desired performance characteristics and can withstand certain abuse conditions.

A.3.1 Electrical tests

Table A.2—Brief description of battery pack electrical tests

1. Continuous charge test	Purpose	The purpose of this test is to evaluate the ability of the battery pack to withstand continuous charging for an extended time period.
	Test procedure	(a) Stage 1—The battery pack shall be discharged using a constant current of 0.2 ItA until the battery voltage reaches the specified end-of-discharge voltage at an ambient temperature of +20 °C ± 5 °C. (b) Stage 2—The battery pack shall be charged using a charger supplied or recommended by the manufacturer or an electrical simulation of that charger, after which the battery shall be held at the specified end-of-charge voltage for a total period of 28 days. A total of five batteries shall be tested in an ambient temperature of +20 °C ± 5 °C.
	Requirement	NL (no leakage) NEL (no visual evidence of leakage of electrolyte) NV (no venting) NE (no explosion) NF (no fire)
2. Overdischarge/ Overcharge test	Purpose	The purpose of this test is to evaluate the ability of the battery pack to withstand repeated overdischarge/overcharge.
	Test procedure	(a) Stage 1—The battery pack shall be charged using the procedure described in IEC 61960-2, Clause 4.1. (b) Stage 2—The battery pack shall be discharged using a constant current of 0.2 I_tA until the battery circuitry terminates discharge or until the battery voltage reaches 0 V at an ambient temperature of +20 °C ± 5 °C. (c) Stage 3—The battery pack shall be charged using the recommended charge current and end-of-charge voltage for a period of 12 h at an ambient temperature of +20 °C ± 5 °C. Stage 2 and Stage 3 shall be repeated 30 times. Five separate samples shall be evaluated.
	Requirement	NE (no explosion) NF (no fire) The exterior temperature of the battery shall not exceed 150 °C.

Copyright © 2006 IEEE. All rights reserved.

Copyright The Institute of Electrical and Electronics Engineers, Inc.
Provided by IHS under license with IEEE
No reproduction or networking permitted without license from IHS
Not for Resale

Table A.2—Brief description of battery pack electrical tests *(continued)*

3. Short-circuit test	Purpose	The purpose of this test is to confirm the ability of the battery pack to withstand an external short-circuit condition.
	Test procedure	(a) Stage 1—The battery pack shall be charged using the procedure described in IEC 61960-2, Clause 4.1. (b) Stage 2—Battery pack shall be subjected to a short-circuit condition with a total external resistance less than 50 mΩ. Tests shall be conducted on five samples at +20 °C ± 5 °C. The test shall continue until the electronic circuit or the current limiting device prevents further discharge, or the battery voltage falls below 0.1 V, and the case temperature has returned to the original ambient temperature, unless fire or explosion occurs first.
	Requirement	NE (no explosion) NF (no fire) The exterior temperature of the battery shall not exceed +150 °C.
4. Overcharge test (simulation of use of an inappropriate charger or charger malfunction)	Purpose	This test is to evaluate the ability of the battery to withstand a charger malfunction where the upper voltage is only limited by the charger.
	Test procedure	Batteries fully charged in accordance with 4.1 of IEC 61960-2 shall be subjected to excessive current, simulating operation with defective charger. The battery shall be discharged at +20 °C ± 5 °C, at a constant current of 0.2 I_tA, to a specified final voltage and shall be subjected to the recommended charger current I_{rec} specified by the manufacturer. The duration of the test shall be calculated as Time (h) = $2.5C_5/I_{rec}$ where I_{rec} is the recommended constant current charge in amperes (A). Tests are to be conducted in an ambient temperature of +20 °C ± 5 °C.
	Requirement	NE (no explosion) NF (no fire)

Copyright © 2006 IEEE. All rights reserved.
Copyright The Institute of Electrical and Electronics Engineers, Inc.
Provided by IHS under license with IEEE
No reproduction or networking permitted without license from IHS
Not for Resale

A.3.2 Mechanical/Environmental tests

Table A.3—Brief description of battery pack mechanical/environmental tests

1. Shock test	Purpose	The purpose of this test is evaluate the ability of the battery pack to withstand mechanical shock by performing a shock test and a high acceleration test carried out in accordance with IEC Publication 60068-2-27: Basic Environmental Testing Procedures, Part 2: Tests—Test Ea: Shock.
	Test procedure	(a) Stage 1—The battery pack shall be charged using the procedure described in IEC 61960-2, Clause 4.1. (b) Stage 2—The battery shall be secured to the testing machine by means of a rigid mount, which will support all mounting surfaces of the battery. The battery shall be subjected to a total of three shocks of equal magnitude. The shocks shall be applied in each of three mutually perpendicular directions unless the battery has only two axes of symmetry; in which case, only two directions shall be tested. Each shock shall be applied in a direction normal to the face of the battery. For each shock, the battery shall be accelerated in such a manner that during the initial 3 ms, the minimum average acceleration is 75*g* (where g is the local acceleration due to gravity). The peak acceleration shall be between 125*g* and 175*g*. Five batteries shall be tested at +20 °C ± 5 °C. The waveform could be either saw-tooth or half-sine.
	Requirement	NL (no leakage) NEL (no visual evidence of leakage of electrolyte) NV (no venting) NE (no explosion) NF (no fire)
2. Vibration test	Purpose	The purpose of this test is to confirm the ability of the battery pack to withstand mechanical vibration by performing a vibration test carried out in accordance with the UN Manual of Tests and Criteria. The test samples from 4.3.1 shall be used.
	Test procedure	a) Stage 1—The battery pack shall be charged using the procedure described in IEC 61960-2, Clause 4.1. (b) Stage 2—The battery shall be subjected to a simple harmonic motion with amplitude of 0. 8 mm (1.6 mm total maximum excursion). The frequency of the harmonic motion shall be increased and decreased at a rate of 1 Hz ± 0.055 Hz per minute between limits of 10 Hz and 55 Hz. Five samples shall be tested in three mutually perpendicular directions unless it has only two axes of symmetry; in which case, only two directions shall be tested. The battery shall be tested at +20 °C ± 5 °C.
	Requirement	NL (no leakage) NEL (no visual evidence of leakage of electrolyte) NV (no venting) NE (no explosion) NF (no fire)

Copyright © 2006 IEEE. All rights reserved.

Copyright The Institute of Electrical and Electronics Engineers, Inc.
Provided by IHS under license with IEEE
No reproduction or networking permitted without license from IHS
Not for Resale

Table A.3—Brief description of battery pack mechanical/environmental tests *(continued)*

3. Thermal shock test	Purpose	Thermal shock causes considerable mechanical stress on battery hardware and occurs when a battery undergoes very large and rapid temperature changes. The purpose of this test is to evaluate the ability of the battery pack to withstand thermal shock by varying the storage temperature of a battery between upper and lower limits.
	Test procedure	(a) Stage 1—The battery pack shall be charged using the procedure described in IEC 61960-2, Clause 4.1. (b) Stage 2—The battery shall be stored for 48 h in an ambient temperature of +75 °C ± 2 °C, moved to –20 °C ± 2 °C within 5 min and stored for 6 h, followed by storage for at least 24 h in an ambient temperature of +20 °C ± 5 °C. Five sample batteries shall be tested.
	Requirement	NL (no leakage) NEL (no visual evidence of leakage of electrolyte) NV (no venting) NE (no explosion) NF (no fire)
4. Altitude simulation (low pressure) test	Purpose	Exposing a battery to low ambient pressure places stress on mechanical components and may cause leakage. The purpose of this test is to evaluate the ability of the battery pack to withstand low ambient pressure. This test simulates an altitude of 15 240 m.
	Test procedure	(a) Stage 1—The battery pack shall be charged using the procedure described in IEC 61960-2, Clause 4.1. (b) Stage 2—The battery shall be placed in a vacuum chamber from which air is subsequently pumped down to a pressure equal to or less than 11.6 kPa and held at that pressure for 6 h in an ambient temperature of +20 °C ± 5 °C. Five sample batteries shall be tested.
	Requirement	NL (no leakage) NEL (no visual evidence of leakage of electrolyte) NV (no venting) NE (no explosion) NF (no fire)
5. Crush test	Purpose	The purpose of this test is to confirm that a moderate crushing force on a battery case does not cause fire or explosion.
	Test procedure	(a) Stage 1—The battery pack shall be charged using the procedure described in IEC 61960-2, Clause 4.1. (b) Stage 2—The battery shall be exposed to a moderate crushing force, using a crushing apparatus capable of applying 114 kg ± 2 kg of force across the total test surface of the battery according to the procedure described in IEC 61960-2, Clause 5.2.2.1. The battery is placed between two flat surfaces 12.7 mm or thicker. The force is gradually increased until an abrupt voltage drop of 1/3, at which time the pressure is released or held at the value (114 kg ± 2 kg) stated above for 1 min. A cylindrical or prismatic battery is to be crushed with its longitudinal axis parallel to the flat surface of the crushing apparatus. A prismatic battery is also to be rotated 90 degrees around its longitudinal axis so that both the wide and the narrow sides will be subjected to the crushing force. Each sample battery is to be subjected to a crushing force in only one direction. Therefore, separate samples are to be used for each test.
	Requirement	NE (no explosion) NF (no fire)

Copyright © 2006 IEEE. All rights reserved.
Copyright The Institute of Electrical and Electronics Engineers, Inc.
Provided by IHS under license with IEEE
No reproduction or networking permitted without license from IHS
Not for Resale

Table A.3—Brief description of battery pack mechanical/environmental tests *(continued)*

6. Free fall test	Purpose	This test is to evaluate the ability of a battery to withstand mechanical shock by performing a free fall test in accordance with IEC 60068-2-32 [B6].
	Test procedure	Each battery shall be dropped six times from 1.0 m onto a hardwood floor. The batteries shall be dropped two times per plane when released to obtain impacts in several positions. Batteries shall be tested in an ambient temperature of +20 °C ± 5 °C.
	Requirement	NV (no venting) NE (no explosion)
7. Thermal exposure test	Purpose	The purpose of this test is to evaluate the thermal stability of the battery at elevated temperatures.
	Test procedure	(a) Stage 1—The battery pack shall be charged using the procedure described in IEC 61960-2, Clause 4.1. (b) Stage 2—The battery shall be placed in an explosion proof, gravity convection, or circulating air oven, and the oven temperature shall be raised at a rate of 5 °C ± 2 °C per minute until the oven temperature reaches +130 °C ± 2 °C. Then the oven shall be maintained at +130 °C ± 2 °C for 30 min. Five sample batteries shall be tested.
	Requirement	NE (no explosion) NF (no fire)
8. Electrostatic discharge (ESD)	Purpose	This test is to evaluate the ability of the battery pack to withstand electrostatic discharge.
	Test procedure	This test shall be carried out in accordance with IEC 61000-4-2 Electronic discharge requirements, Clause 1 to Clause 8, and conducted on a battery pack containing electronic protection devices, such as diodes, transistors, or integrated circuits.
	Requirement	The battery pack shall be tested for contact discharge at 4 kV and air discharge at 8 kV.
9. Mold stress test	Purpose	This test is to evaluate the effects of an elevated temperature environment on a battery. Batteries are to be exposed to a moderately high temperature.
	Test procedure	The battery shall be placed in a full draft circulating air oven maintained at a uniform temperature of +70 °C ± 2 °C. The batteries are to remain in the oven for 7 h, after which they are to be removed and allowed to return to room temperature for examination.
	Requirement	No distortion beyond the dimensions specified for the battery, no evidence of mechanical damage (exposure of internal components or leakage of electrolyte).

A.4 Host device

This subclause illustrates suggested methods to address design verification of specific functions and attributes of the host device. These specific test procedures and requirements are designed to confirm that the host device and battery pack are robust enough to resist abuse conditions should they arise.

Copyright © 2006 IEEE. All rights reserved.

Copyright The Institute of Electrical and Electronics Engineers, Inc.
Provided by IHS under license with IEEE
No reproduction or networking permitted without license from IHS
Not for Resale

A.4.1 Electrical design verification

A.4.1.1 Host device input overvoltage protection

An input dc voltage higher than the specified maximum input voltage should be applied to the dc input terminal of the host device for a predefined level and time duration specified by the host device manufacturer. The host device overvoltage protection circuit should be triggered without any resulting component damage or hazard. In extreme circumstances where an extremely high voltage is applied, only the components directly connected to the input terminal should be damaged. Damage, if it occurs, should be limited to components directly connected to the input terminal. The host device should not pass through any overvoltage to the battery pack.

A.4.1.2 Host device input overcurrent protection

In systems with the capability to measure dc input current, an input current higher than the specified maximum input current should be applied to the dc input terminal of the host device for a predefined level and time duration specified by the host device manufacturer. The host device overcurrent protection circuit should be triggered without any resulting component damage or hazard. In extreme circumstances where an extremely high current is applied, damage should be limited to the components directly connected to the input terminal. The host device should not pass overcurrent through to the battery pack.

A.4.1.3 Charger output overvoltage protection test

A dc voltage higher than the specified maximum output charging voltage should be applied at the charger output. The charging subsystem should identify the occurrence and suspend charging within a specified time period defined by the system manufacturer without any resulting component damage or hazard. Charging should be suspended until the voltage falls below the maximum specified charging voltage.

A.4.1.4 Active charger communication test

A break in communications among the active charging subsystem, embedded controller, and battery pack, should be applied (one at a time) during the charging of a battery pack. The duration of the break is defined by the system manufacturer. In each case, the charging subsystem should suspend charging of the battery pack within a specified time without resulting in component damage or a hazard.

A.4.1.5 Passive charger test

In systems where an active charging subsystem is not implemented, verify that the host device correctly obtains the battery pack identification data.

A.4.1.6 Charging algorithm test—battery voltage

An example of a charging algorithm flowchart is shown in Figure A.1.

A.4.1.6.1 Overvoltage test

An overvoltage condition should be applied to the battery charging terminals on the host device battery connector. The charging subsystem should not initiate charging while the overvoltage condition exists.

A.4.1.6.2 Undervoltage test

An undervoltage condition should be applied to the battery charging terminals on the host device battery connector. The charging subsystem should not initiate normal charging while the undervoltage condition exists. A pre-charge function may be initiated in systems supporting that function.

Copyright © 2006 IEEE. All rights reserved.
Copyright The Institute of Electrical and Electronics Engineers, Inc.
Provided by IHS under license with IEEE
No reproduction or networking permitted without license from IHS Not for Resale

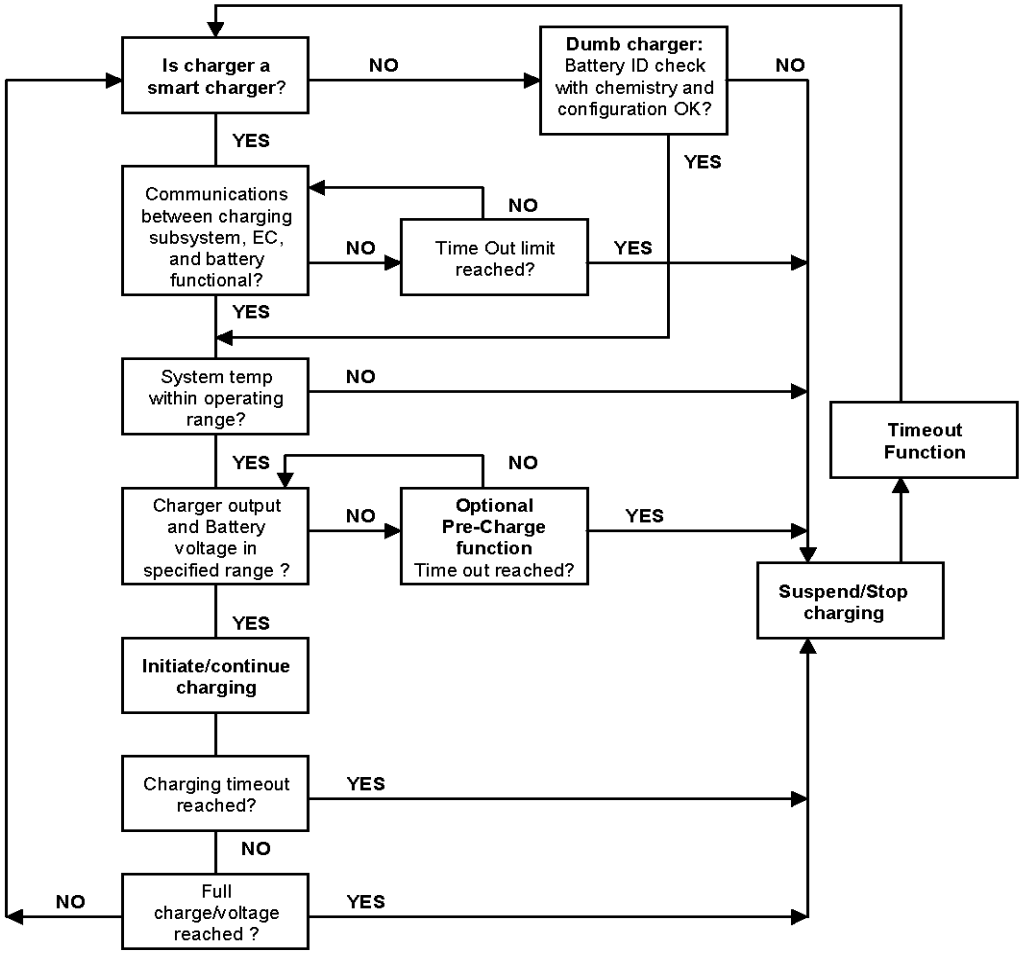

Figure A.1—Charging algorithm example

A.4.1.7 Charging algorithm test—charging timeout

A load that sinks nominal charging current and presents constant voltage should be applied to the battery charging terminals of the host device battery connector. The charging subsystem should timeout after a specified time, and charging should be suspended without resulting component damage or hazard.

A.4.1.8 Charging algorithm test—overcurrent

A simulated overcurrent condition, such as connecting a load exceeding the specified charging current, should be applied to the terminals. The system should suspend charging within a specified time without resulting component damage or hazard.

A.4.1.9 ESD protection test

The ability of the host device to withstand electrostatic discharge should be verified. The parameters for the ESD test for the host device and system should be determined by the system manufacturer.

Copyright © 2006 IEEE. All rights reserved.

Copyright The Institute of Electrical and Electronics Engineers, Inc.
Provided by IHS under license with IEEE
No reproduction or networking permitted without license from IHS
Not for Resale

A.4.2 Environmental tests

A.4.2.1 Charging temperature tests

The system with a non-fully charged battery should be placed in the powered OFF state in a temperature-controlled environment that is just outside the specified charging temperature range. Charging should be suspended when the system is switched ON without resulting component damage or hazard. In systems that support a reduced charging algorithm, the charging subsystem may reduce the charge current instead of suspending charging.

A.4.2.1.1 Charging algorithm temperature test

The system with a non-fully charged battery should be placed inside a temperature-controlled environment and switched ON while remaining inside the specified operating temperature range. Charging should be initiated. The temperature should then be brought outside the operating range. The system should suspend charging without resulting component damage or hazard. In systems that support a reduced charging algorithm, the charging subsystem may reduce the charge current instead of suspending charging.

A.4.2.1.2 Temperature cycling test

The manufacturer may perform several cycles of the test as specified in A.4.2.1.1 by bringing the temperature back down inside the operating range to complete the cycle. Charging should resume when the system temperature falls within the operating range with a hysteresis to be determined by the system manufacturer.

A.4.2.2 Humidity test

High humidity may be encountered in many parts of the world. The humidity test for the host device and system should be determined by the system manufacturer.

A.4.2.3 High altitude test

Lower pressure may be encountered in an aircraft transport. The high-altitude test for the host device should be determined by the system manufacturer.

A.4.3 Mechanical tests

Host device and battery pack mechanical tests such as shock and vibration should be determined by the system manufacturer.

Copyright © 2006 IEEE. All rights reserved.
Copyright The Institute of Electrical and Electronics Engineers, Inc.
Provided by IHS under license with IEEE
No reproduction or networking permitted without license from IHS
Not for Resale

Annex B

(informative)

Failure mode and effects analysis (FMEA) techniques

B.1 Introduction

This annex is designed to illustrate failure mode and effects analysis (FMEA) techniques and the procedures that a manufacturer/supplier uses to arrive at a complete system analysis to ensure that a particular design prevents hazards from occurring during intended use and reasonable and foreseeable misuse.

B.1.1 Example 1

FMEA 2 (pack) identifies a control scheme distributed over the pack and host device for overcurrent potentially caused by a pack short circuit due to a connector contacting an external metal object, such as when packed in a computer bag with a metal pen. FMEA 4 identifies the end-user responsibilities as “Don’t allow the connector to come in contact with any metal objects.” FMEA 4 also identifies producer responsibilities as “Pack has circuit and/or mechanical design to protect against external short circuit.” Reliable total system operation requires a label or other notification for the end user: “Don’t allow the connector to come in contact with any metal objects.”

B.1.2 Example 2

The manufacturer/supplier conducts FMEAs 1, 2, 3, and 4 to determine whether protection circuits are required to prevent hazards from occurring as a result of two faults in reasonable and foreseeable misuse. The manufacturer/supplier determines the best location(s) for redundant protection circuits. Building on example 1, the manufacturer/supplier implements a mechanical protection device to protect against external pack short circuit. This mechanical protection device passes all in-spec reliability and drop tests. However, the manufacturer/supplier’s thorough FMEA analysis shows that the mechanical protection device may fail when subject to a common scenario of dropping the host device to the floor or stuffing the host device in a briefcase (fault 1: broken connector barrier). In this event, a second protection method shall be employed, such as an overcurrent protection (OCP) circuit. However, if the OCP fails to operate due to a manufacturing defect (fault 2), then the cell level short-circuit protection could still provide protection against a potential hazard from the two faults listed. (One fault is a broken connector from reasonable and foreseeable misuse. The second fault is a circuit failure caused by a manufacturing defect.)

B.1.3 Example 3

The charging system consists of an ac/dc power supply with a 6 V output, a charge control circuit (control and MOSFET) in the host device, a single overvoltage protection circuit in the battery pack (control IC and MOSFET), and a single cell with a maximum voltage of 4.2 V. During the FMEA 4, the manufacturer/supplier considers a situation involving two independent faults: a short circuit in the host device charge control FET (fault 1) and a short in the battery overvoltage FET (fault 2). In this situation, the 6 V power supply output would be passed directly to the cell stack. The manufacturer/supplier knows that charging the cells to 6 V may lead to a hazard. To resolve this situation, a second overvoltage circuit is added to the battery pack. With this design, if the two faults described occur, the second battery overvoltage circuit isolates the pack from the 6 V power supply.

Copyright © 2006 IEEE. All rights reserved.

Copyright The Institute of Electrical and Electronics Engineers, Inc.
Provided by IHS under license with IEEE
No reproduction or networking permitted without license from IHS
Not for Resale

B.2 A typical procedure for design analysis: FMEA

FMEA consists of a detailed engineering examination of the design before it is put into production to determine the effect of failure of a component or a subsystem on the host device.

FMEA is a document produced to identify failure modes and their effects in new designs. All failure modes are ranked and weighted by RPN, so that they may be prioritized and corrected.

Essential questions to ask in the FMEA are as follows:

— What elements of the design are most likely to produce defects?
— How can the defects be effectively eliminated or mitigated?
— Would your customer agree with the assignment of risk?

An example of an FMEA is shown in Figure B.1.

Product name	
Responsible	

Prepared by:	Page __ of __
FEMA date (orig) _____ (Rev) _____	

Design function	Potential failure mode	Potential failure effects	SEV	Potential causes of failure	OCC	Detection method	DET	RPN	Recommended actions	Resp.
Component, footprint design, assembly, process, engineering	Insufficient solder joints on SMT component	Motherboard failure of assembly test	4	Incorrect pad size, clogged stencil aperture	2	In-circuit test, visual inspection	2	16	Evaluate and correct pad size and stencil aperture size, modify stencil cleaning procedure	
								0		

Figure B.1—Design of potential FEMA

Once constructed, the FMEA ranks risk priority numbers (RPNs) and assignments are made to develop and review changes to mitigate or eliminate the failure effect. The RPN is a number calculated by multiplying Severity, Occurrence Likelihood, and Likelihood of not detecting the fault in an FMEA analysis. The scale is typically 1 through 5, with 5 being highest and 1 being lowest.

Some failure effects may be so low in ranking that they are not corrected.

The following references provide additional information on conducting FMEA: Guidelines for Failure Modes and Effects Analysis (FMEA) for Medical Devices [B2], FMEA-3 [B1], McDermott et al. [B11], SAE J1739-2002 [B12], Stamatis [B13], and Sutton [B14].

Copyright © 2006 IEEE. All rights reserved.
Copyright The Institute of Electrical and Electronics Engineers, Inc.
Provided by IHS under license with IEEE
No reproduction or networking permitted without license from IHS
Not for Resale

Annex C

(informative)

System analysis considering two faults

C.1 Why two faults should be considered in a system analysis

Protection mechanisms are intended to prevent specific failures from creating hazards; for example, a charge control circuit prevents the battery voltage from exceeding a specified value. Occasionally, a fault occurs in a protection mechanism that prevents its proper operation. As the risk of a hazard is related to the probability of the fault occurrence, a robust design is desirable. Although the probability of fault occurrence in a properly designed protection mechanism is low, it is generally not zero. Many times, it is difficult to reduce the fault probability of a single protection mechanism sufficiently to reach the desired risk level. Thus, redundant protection mechanisms must be used to achieve the goal.

If the multiple protection mechanisms are designed into the system, a hazard cannot occur unless all mechanisms simultaneously fail. It is very unlikely that two independent protection mechanisms will fail simultaneously. In fact, the probability that simultaneous failures will occur is simply the mathematical product of the predicted failure rates of the two independent protection mechanisms. If the risk level needs to be lowered further, a third protection mechanism may be necessary in the system. Thus, a careful system analysis is required where low probabilities of failure are desired.

C.2 Factors that may induce faults in a system

Figure C.1 shows various stress factors that may induce faults in a system. These factors may act alone or in combination with other factors to induce failures in protection mechanisms. Such a diagram may be useful in considering the interaction of stress factors on the system so that all possible faults are properly evaluated in a DFMEA.

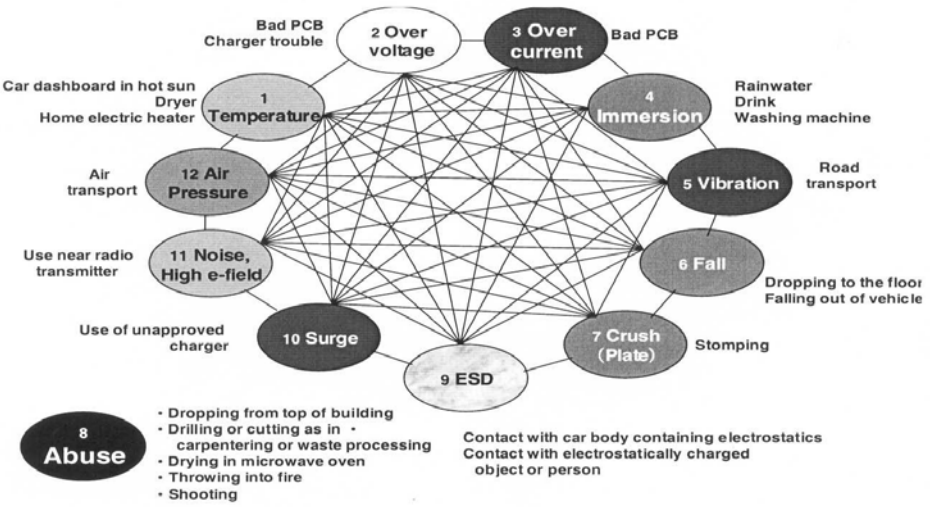

Figure C.1—Stress factors that may induce faults

Copyright © 2006 IEEE. All rights reserved.

Copyright The Institute of Electrical and Electronics Engineers, Inc.
Provided by IHS under license with IEEE
No reproduction or networking permitted without license from IHS
Not for Resale

C.2.1 Designs for redundant protection against battery overcharge

There are many different methods to prevent battery overcharge, but the following generic examples demonstrate how redundant protection schemes can be distributed in the overall system. The manufacturer/ supplier can then select an approach to meet the goals established for the product, including minimizing the risk of overcharge to an acceptable level. Most charging system designs will be similar to one of the three examples given in Figure C.2 through Figure C.4.

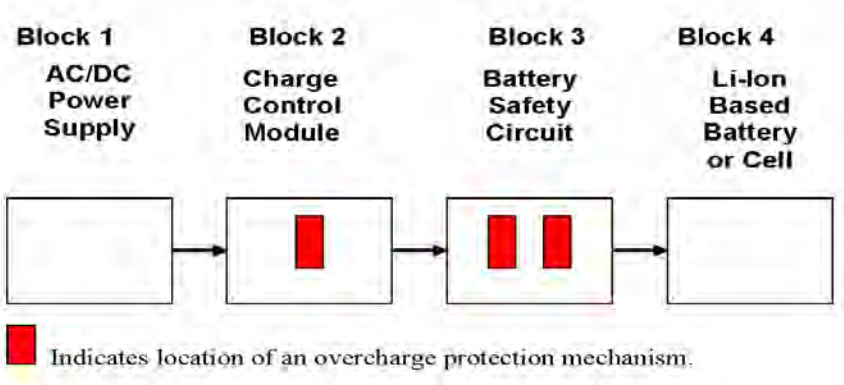

Figure C.2—Redundant protection circuits in battery (Example 1)

Possible Strengths: Potential for the system to be two-fault tolerant and achieve a very low probability of creating a hazard.

Possible Weaknesses: Redundant battery safety circuits in Block 3 may not be truly independent, or one of the mechanisms may not protect against overcharge in expected situations.

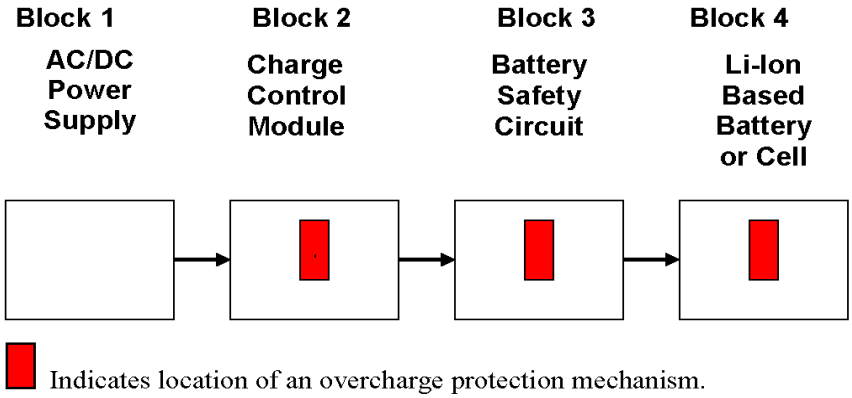

Figure C.3—Single safety circuit with "robust Cell" (Example 2)

Possible Strengths: Potential for the system to be two-fault tolerant and achieve a very low probability of creating a hazard. If a cell (Block 4) can be shown to withstand the voltage and current profile available from the power supply (Block 1), then a loss of charge control (Block 2) combined with a failure of the primary safety circuit (Block 3) will still not create a hazard.

Possible Weaknesses: The cell may not withstand the potential overcharge from a commonly available power supply that could be connected to the system. In that case, the charging system is effectively the same as the one shown in Example 4 in Figure C.5.

Copyright © 2006 IEEE. All rights reserved.
Copyright The Institute of Electrical and Electronics Engineers, Inc.
Provided by IHS under license with IEEE
No reproduction or networking permitted without license from IHS
Not for Resale

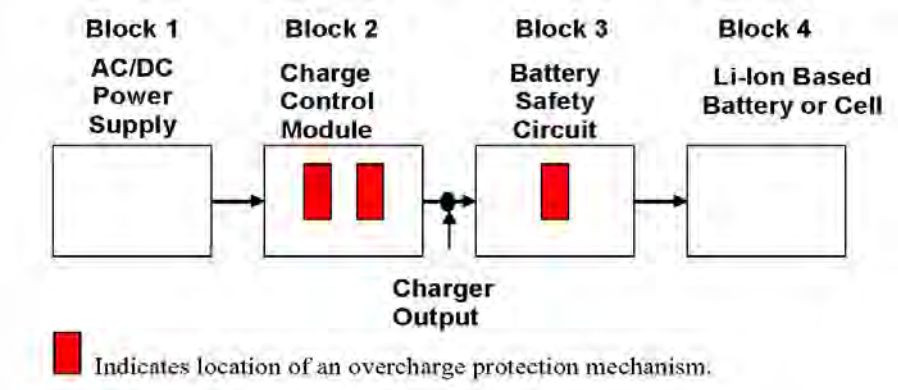

Figure C.4—Redundant charge control in phone/host (Example 3)

Possible Strengths: Potential to be two-fault tolerant and achieve a very low probability of system failure. If the charge control device (Block 2) can be designed to sufficiently restrict its output voltage and current under single-fault conditions to the "safe" region of the cell, then two faults (one fault in the battery safety circuit and one in the charge control module) will not produce a hazard. The cell (Block 4) must be shown to withstand the voltage and current profile available from the power supply (Block 1), in order for the loss of charge control (Block 2) not to produce a hazard.

Possible Weaknesses: If the battery is placed in a third-party charger rather than the normal host charger control device, the risk of a hazard may be the same as Example 4 in Figure C.5.

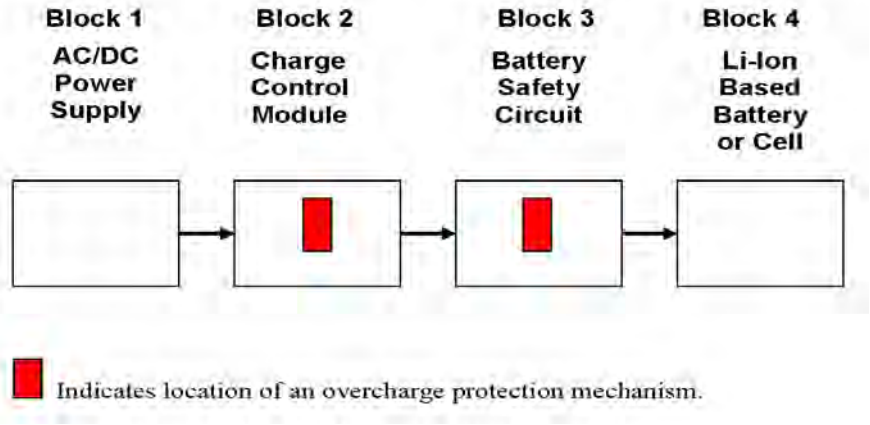

Figure C.5—Single fault tolerant design (Example 4)

Possible Strengths: May achieve low probability of system failure with reduced size and complexity.

Possible Weaknesses: Single fault tolerant. Requires a thorough DFMEA and careful estimate of the probability of failure of both protection mechanisms to meet goals on overall system protection.

C.2.2 Designs for protection on discharge

Although the examples in C.2.1 are limited to battery overcharge concerns, the same approach can be used to consider other hazards, such as high battery discharge rates from potential short in the host device, or overheating from a potential short of the battery terminals when separated from the host. All reasonable foreseeable hazards should be evaluated for possible risk mitigation.

Copyright © 2006 IEEE. All rights reserved.

Copyright The Institute of Electrical and Electronics Engineers, Inc.
Provided by IHS under license with IEEE
No reproduction or networking permitted without license from IHS
Not for Resale

Example 5 in Figure C.6 shows how the block diagram approach can be applied to consider potential faults in the discharge mode.

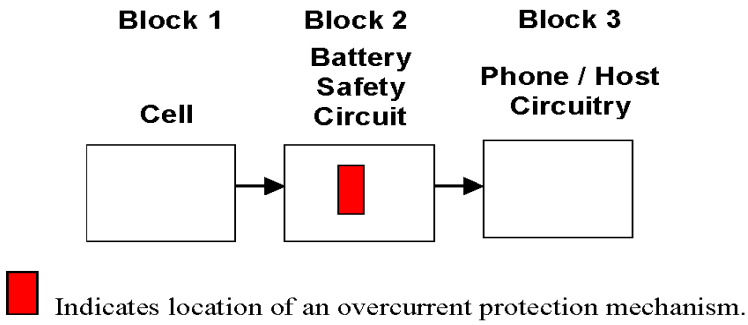

Figure C.6—Discharge fault design (Example 5)

C.3 Analysis tools for system design

The block diagram approach is useful for considering the hazards that may results from one or more failures in the system.

Table C.1 shows one implementation of how this method can be used to summarize the results of a system-level DFMEA.

Table C.1—Summary of a system-level DFMEA for battery overcharge

Example	System fault(s) considered	Effect on system	Additional risk mitigation
1a	Charge control is faulty and continues to charge battery beyond the desired termination voltage.	The primary safety circuit in the battery protects the cell from overcharge.	The cell should be tested and shown safe, if charged to the maximum trip voltage of the protection circuit, at the maximum charge rate of this fault mode.
1b	Both charge control is faulty and the primary battery safety circuit fails. (Double fault)	The back-up safety circuit in the battery protects the cell from overcharge.	The cell should be tested and shown safe, if charged to the maximum trip voltage of the protection circuit, at the maximum charge rate of this fault mode.
1c	Both battery safety circuits are nonfunctional.	Charge control still functions normally and stops at proper cell voltage.	None
2a	Charge control is faulty and continues to charge battery beyond the desired termination voltage.	The primary safety circuit in the battery protects against overcharge.	The cell should be tested and shown safe, if charged to the maximum trip voltage of the protection circuit, at the maximum charge rate of this fault mode.
2b	Both charge control is faulty and the primary battery safety circuit fails. (Double fault)	The cell is overcharged to the limits of the voltage and current available from the power supply.	The cell should be tested and shown safe, if charged to the maximum voltage and charge rate available from the ac or dc power supply.

Copyright © 2006 IEEE. All rights reserved.
Copyright The Institute of Electrical and Electronics Engineers, Inc.
Provided by IHS under license with IEEE
No reproduction or networking permitted without license from IHS
Not for Resale

Table C.1—Summary of a system-level DFMEA for battery overcharge *(continued)*

Example	System fault(s) considered	Effect on system	Additional risk mitigation
3a	Charge control is faulty and continues to charge battery beyond the desired termination voltage.	The back-up charge control mechanism in the host protects the battery from overcharge	The cell should be tested and shown safe, if charged to the maximum trip voltage of the protection circuit, at the maximum charge rate of this fault mode.
3b	Both charge control and the back-up charge control mechanisms are faulty. (Double fault)	The safety circuit in the battery protects against overcharge.	The cell should be tested and shown safe, if charged to the maximum trip voltage of the protection circuit, at the maximum charge rate of this fault mode.
3c	Both charge control and the battery safety circuits are faulty. (Double fault)	The back-up charge control mechanism in the host protects the battery from overcharge.	The cell should be tested and shown safe, if charged to the maximum trip voltage of the protection circuit, at the maximum charge rate of this fault mode.
4a	Charge control is faulty and continues to charge battery beyond the desired termination voltage.	The safety circuit in the battery protects against overcharge.	The cell should be tested and shown safe, if charged to the maximum trip voltage of the protection circuit, at the maximum charge rate of this fault mode.
4b	Both charge control is faulty and the primary battery safety circuit fails. (Double fault)	The cell is overcharged to the limits of the voltage and current available from the power supply.	The cell should be tested and shown safe, if charged to the maximum voltage and charge rate available from the ac or dc power supply, OR the probability of this double fault scenario needs to be sufficiently low to be considered an acceptable risk.
NOTE—Example refers back to the block examples provided in C.2.1 and C.2.2.			

Copyright © 2006 IEEE. All rights reserved.

Copyright The Institute of Electrical and Electronics Engineers, Inc.
Provided by IHS under license with IEEE
No reproduction or networking permitted without license from IHS
Not for Resale

Annex D

(informative)

Compliance validation process example

D.1 Validation

This informative annex defines a process by which the various system components can be validated against the IEEE 1725 standard. This annex also addresses how a provider of these product components might be assessed to ensure their compliance to this standard from a process perspective. These two aspects are treated as separate processes.

D.2 Definitions specific to this annex

D.2.1 System components

References those product types that have been defined within this standard, e.g., cells, battery packs, host devices, and power accessories.

D.2.2 Vendor

The manufacturer of the system component that is to undergo validation.

D.2.3 Approval organization (AO)

An organization responsible for managing this validation process and its associated data. For the self-certified case, the AO may be the vendor. For the third-party certified case, the AO is an independent entity.

D.2.4 Authorized laboratory

A laboratory that has met requirements established by the approval organization to conduct validation testing.

D.2.5 Subject matter experts (SMEs)

Designated personnel with specific industry-related knowledge applicable to this standard.

D.2.6 Certified

Certification refers to a statement of compliance for both specific products (the result of product testing and evaluation) and to specific vendor sites (the result of organizational audits) per the requirements of this standard. This process can be done through self-certification or using an independent organization.

Copyright © 2006 IEEE. All rights reserved.
Copyright The Institute of Electrical and Electronics Engineers, Inc.
Provided by IHS under license with IEEE
No reproduction or networking permitted without license from IHS Not for Resale

D.3 Responsibilities

D.3.1 Vendors of system components

D.3.1.1 Subordinate vendors of system components

Ensure that all subordinate vendors of system components that are integrated into or integrated with represented products are compliant to this standard.

D.3.1.2 Validation testing

Conduct or procure validation testing per the requirements of this standard.

D.3.1.3 Facility audit

Conduct or procure audits of applicable facilities.

D.3.2 Approval organization

D.3.2.1 Product validation

Authorize laboratories (internal or external entities) to provide product validation testing of system components.

D.3.2.2 Subject matter experts

Designate subject matter experts to act as advisors and operational auditors. Maintain a pool of such personnel to conduct audits as required.

D.3.2.3 Site audits

Provide site audit services per the requirements of this standard.

D.3.2.4 Certifications

Maintain the results of product and site certifications. Such information should be available to appropriate entities for the purposes of ensuring selection of validated vendors and products.

D.4 Validation process for system components

D.4.1 Assumptions and overall guidelines

D.4.1.1 Testing of system components

Test regimes with specific test definitions have been defined for each system component.

D.4.1.2 Testing a given design

This is a one-time test for a given design (part number). Any changes to the design that may materially impact the test results or safety of the product would require retest.

Copyright © 2006 IEEE. All rights reserved.

Copyright The Institute of Electrical and Electronics Engineers, Inc.
Provided by IHS under license with IEEE
No reproduction or networking permitted without license from IHS Not for Resale

D.4.1.3 Testing similar designs

The approval organization may define a process to reduce test requirements based on similarity to existing certified designs.

D.4.1.4 Component validation requirement

It is a requirement in the normative validation portion of this standard that a system component cannot be certified unless all component defined product types have been certified. As an example, a battery cannot be certified if it uses a non-certified component cell.

D.4.1.5 Example component validation process

Example system component validation process (see Figure D.1).

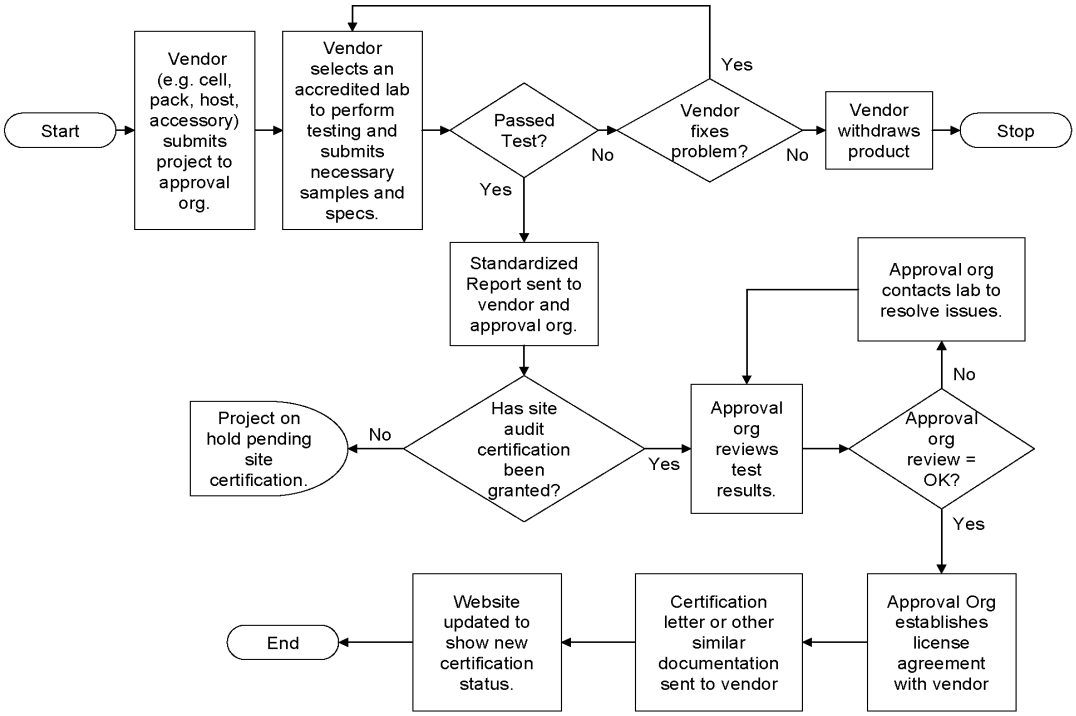

Figure D.1—System component validation process

D.4.2 Validation process steps

D.4.2.1 Product testing initiation

The vendor contacts its designated approval organization for guidance on specific requirements.

D.4.2.2 Laboratory selection

The vendor selects an authorized laboratory to perform certification testing and submits the necessary specifications and test samples.

Copyright © 2006 IEEE. All rights reserved.
Copyright The Institute of Electrical and Electronics Engineers, Inc.
Provided by IHS under license with IEEE
No reproduction or networking permitted without license from IHS
Not for Resale

D.4.2.3 Product acceptance/rejection

Should the product not meet requirements, the vendor should make the appropriate corrections and then resubmit the product. If corrections are deemed inappropriate, the vendor may withdraw the product from certification testing.

D.4.2.4 Laboratory reporting

Once a passing test result is obtained, the laboratory provides copies of the resultant data to the submitting vendor and directly to the approval organization using standardized reporting requirements. Note that this data report is *not* equivalent to product certification.

D.4.2.5 Manufacturing site certification

The approval organization verifies that the manufacturing site for the product under review has been certified under a site audit program to establish compliance to process requirements defined in this standard (see D.5 for recommendations on a site audit program). This site certification should be a prerequisite to product certification.

D.4.2.6 Formal review

The approval organization reviews the product testing report. Any deficiencies noted are addressed with the laboratory that conducted the testing.

D.4.2.7 Vendor certification

With any deficiencies cleared, the approval organization will contact the submitting vendor. If this is a third-party arrangement, a license agreement may be completed between the two parties. Once any required contracts are executed, a letter of approval or similar notice of product certification will be provided to the submitting vendor. The certification will be added to the catalog of certifications managed by the approval organization.

D.5 Validation process for a vendor site

D.5.1 Assumptions and overall guidelines

D.5.1.1 Manufacturing site audit

This audit is specific to a given manufacturing site. Multiple sites require independent audits.

D.5.1.2 Audit checklist

An appropriate audit checklist comprising the applicable requirements of this standard has been developed through a joint effort of the industry and the approval organization. This checklist will be made available to potential vendors by the approval organization.

D.5.1.3 Scope and frequency of audit

The audit cycle and scope shall be according to the rules of the AO.

Copyright © 2006 IEEE. All rights reserved.

Copyright The Institute of Electrical and Electronics Engineers, Inc.
Provided by IHS under license with IEEE
No reproduction or networking permitted without license from IHS Not for Resale

D.5.1.4 Example process audit definition (see Figure D.2)

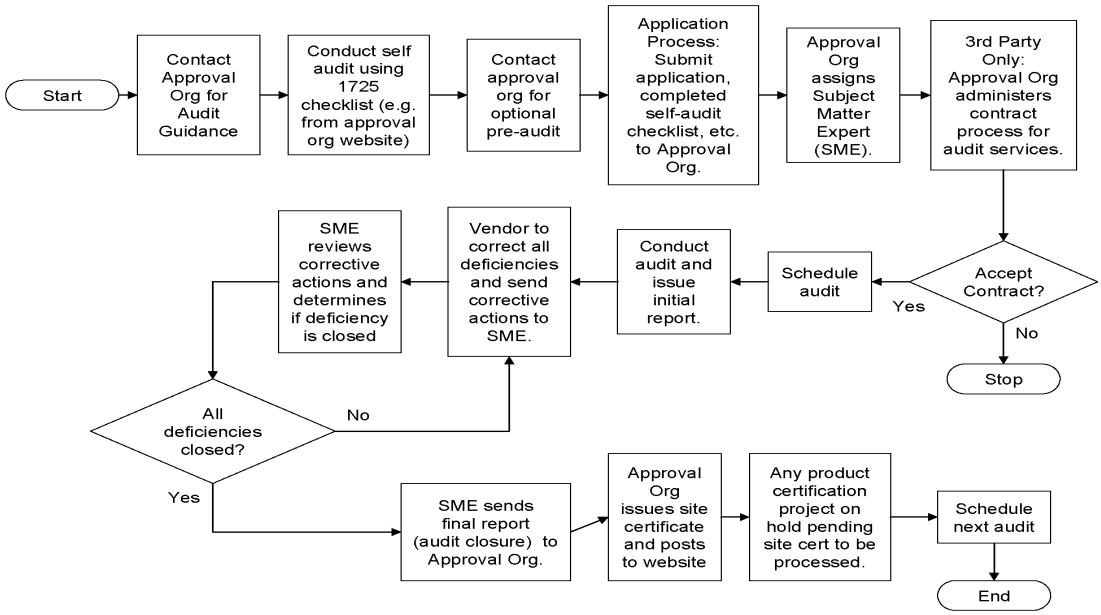

Figure D.2—Vendor site audit process

D.5.2 Process steps

D.5.2.1 Vendor application

Vendor contacts approval organization for specific audit process requirements.

D.5.2.2 Vendor self-audit

Vendor conducts self-audit using published audit checklist.

D.5.2.3 Pre-audit services

Vendor may contact approval organization for optional pre-audit services (if available).

D.5.2.4 Vendor application

Vendor submits application to the approval organization per its defined application procedures. At a minimum this process will include a written application and a completed self-audit checklist.

D.5.2.5 Assignment of experts

The approval organization assigns a subject matter expert. Additional personnel may be assigned to assist with the audit as required.

D.5.2.6 Contract authorization

Contract authorization applies to the third-party audit case only. The approval organization will manage the contractual processes that govern the audit arrangement as well as any agreement with the subject matter expert. Once all contracts have been properly authorized, the audit will be scheduled.

Copyright © 2006 IEEE. All rights reserved.
Copyright The Institute of Electrical and Electronics Engineers, Inc.
Provided by IHS under license with IEEE
No reproduction or networking permitted without license from IHS
Not for Resale

D.5.2.7 Initial audit report

The audit will be executed. Once completed, an audit report will be generated. A copy will be provided to the audited vendor and to the approval organization.

D.5.2.8 Corrective action

The vendor will make appropriate corrective actions to close the noted nonconformances. Such corrective action documentation will be provided to the auditor(s) for review and approval. Once all nonconformances have been closed, the lead auditor will publish a final report (audit closure) with copies going to the audited vendor and to the approval organization.

D.5.2.9 Site certification

The approval organization will issue a site certification to the vendor and will update the necessary records to reflect the new status. Any product certifications placed on hold pending the site audit will be processed. Dates for future audits will be tentatively established.

Copyright © 2006 IEEE. All rights reserved.

Copyright The Institute of Electrical and Electronics Engineers, Inc.
Provided by IHS under license with IEEE
No reproduction or networking permitted without license from IHS Not for Resale

Annex E

(informative)

Environmental considerations

E.1 Temperature environmental considerations

This informative annex includes information from a study on temperature range at various locations in automobiles. This information is provided to assist the user of this IEEE standard when temperature is included in design analyses. This annex is intended to be a resource for the user of the standard. This annex includes temperature rise on each position in the car in clear weather; maximum temperature at each position in the car for 8 h in the desert condition under clear weather; and maximum temperature at each position in the car in Melbourne, Australia, when the maximum temperature on the day the data was taken was 40 ºC. Figure E.1 through Figure E.3 were printed with permission from the source, the Society of Automotive Engineers of Japan, Inc.

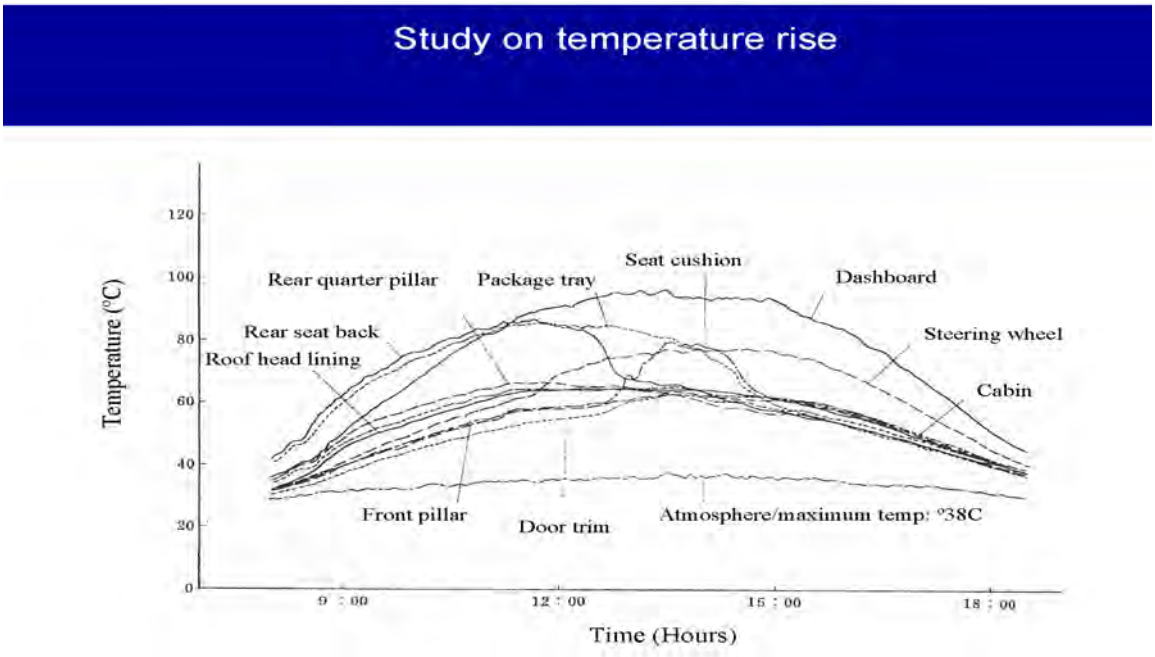

Source: *Automobile Engineering in Japan*, vol. 30, p. 653, 1976.

Figure E.1—Temperature rise on each position in the car under clear weather (measured by Ford)

Copyright © 2006 IEEE. All rights reserved.
Copyright The Institute of Electrical and Electronics Engineers, Inc.
Provided by IHS under license with IEEE
No reproduction or networking permitted without license from IHS
Not for Resale

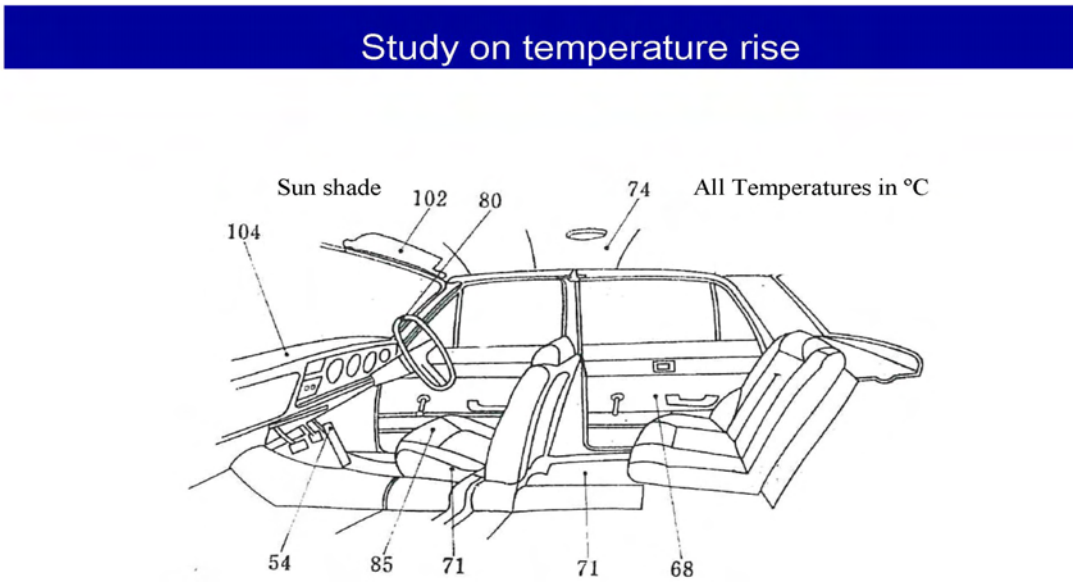

Source: *Automobile Engineering in Japan*, vol. 30, p. 654, 1976.

Figure E.2—Maximim temperature at each position in the car for 8 h in the desert condition under clear weather
[Outside temperature was 52 ºC (measured by Ford)]

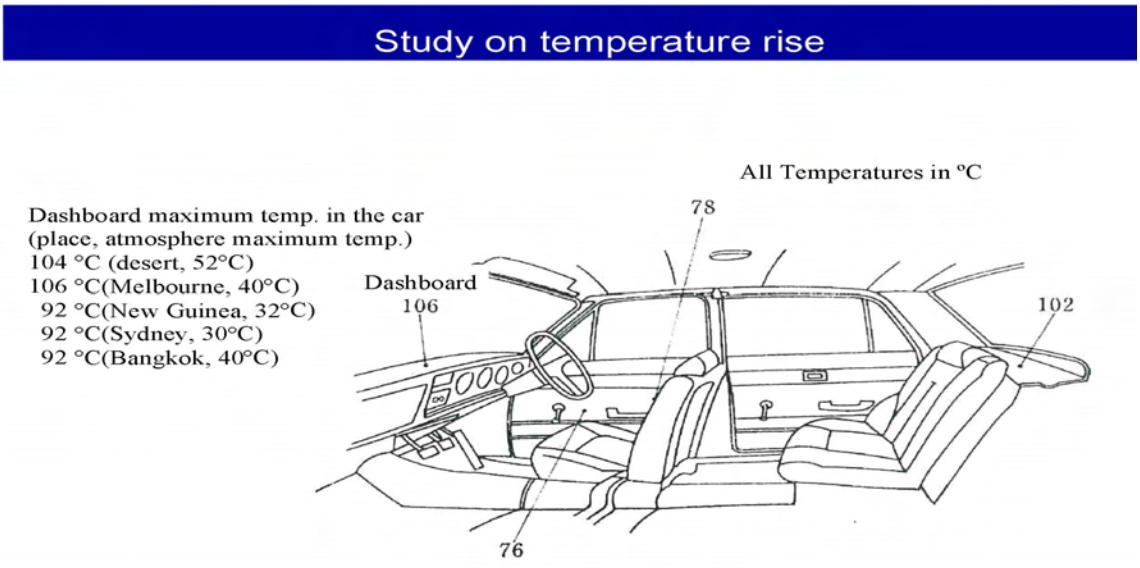

Source: *Automobile Engineering in Japan*, vol. 30, p. 654, 1976.

Figure E.3—Maximum temperature at each position in the car in Melbourne
[Condition: Maximum temperature on the day was 40 ºC]

Copyright © 2006 IEEE. All rights reserved.

Copyright The Institute of Electrical and Electronics Engineers, Inc.
Provided by IHS under license with IEEE
No reproduction or networking permitted without license from IHS
Not for Resale

Annex F

(informative)

Bibliography

[B1] FMEA-3, *Potential Failure Effects Analysis*, 3d ed. Automotive Industry Action Group (AIAG), June 2001.

[B2] *Guidelines for Failure Modes and Effects Analysis (FMEA) for Medical Devices*. Boca Raton, FL: CRC Press, 2003.

[B3] IEC 60050-482, International Electrotechnical Vocabulary—Part 482: Primary and Secondary Cells and Batteries.

[B4] IEC 60068-2-6, Direct Acting Analogue Electrical Measuring Instruments and Their Accessories.

[B5] IEC 60068-2-27, Environmental Testing Procedures, Part 2: Tests—Test Ea and Guidance Shock., 3rd edition.

[B6] IEC 60068-2-32, Environmental Testing Procedures, Part 2: Tests—Test Ed: Free Fall, 3rd edition.

[B7] IEC 60068-2-64, Environmental Testing, Part 2: Tests—Tests—Test Fc: Vibration (sinusoidal).

[B8] IEEE 100, *The Authoritative Dictionary of IEEE Standards Terms*, Seventh Edition, New York, Institute of Electrical and Electronics Engineers, Inc.

[B9] IPC 2221A (May 2003), Generic Standard on Printed Board Design.[9]

[B10] ISO 9000:2000, Quality management systems—Fundamentals and vocabulary.[10]

[B11] McDermott, R. E., Mikulak, R., Beauregard, M. R., and Mikylak, R., *The Basics of FMEA*. Productivity Inc., 1996.

[B12] SAE J1739, Potential Failure Mode and Effects Analysis in Design (Design FMEA) and Potential Failure Mode Effects Analysis in Manufacturing and Assembly Processes (Process FMEA) Reference Manual, 2002.

[B13] Stamatis, D. H., *Failure Mode and Effect Analysis: FMEA from Theory to Execution*, 2d ed. American Society for Quality, 2003.

[B14] Sutton, I. S., *Process Hazards Analysis*, 2d ed. Houston, TX: Sutton Technical Books, 2003.

[B15] *Webster's New Collegiate Dictionary*. Springfield, MA: Merriam-Webster, Inc., 2003.

[9]IPC publications are available from the Institute for Interconnecting and Packaging Electronic Circuits (IPC), 2215 Sanders Road, Northbrook, IL 60062-6135 (http://www.ipc.org/).

[10]ISO publications are available from the ISO Central Secretariat, Case Postale 56, 1 rue de Varembé, CH-1211, Genève 20, Switzerland/Suisse (http://www.iso.ch/). ISO publications are also available in the United States from the Sales Department, American National Standards Institute, 25 West 43rd Street, 4th Floor, New York, NY 10036, USA (http://www.ansi.org/).

--`,,```,,,,````-`-`,,`,,`,`,,`---

Copyright © 2006 IEEE. All rights reserved.
Copyright The Institute of Electrical and Electronics Engineers, Inc.
Provided by IHS under license with IEEE
No reproduction or networking permitted without license from IHS
Not for Resale