IEEE Standard for Methods of Measurement of Radio-Frequency Power-Line Interference Filter in the Range of 100 Hz to 10 GHz

IEEE Electromagnetic Compatibility Society

1560™

IEEE
3 Park Avenue
New York, NY 10016-5997, USA

24 February 2006

IEEE Std 1560™-2005

Copyright The Institute of Electrical and Electronics Engineers, Inc.
Provided by IHS under license with IEEE
No reproduction or networking permitted without license from IHS

Not for Resale

--`,,```,,,,````-`-`,,`,,`,`,,`---

and Electronics Engineers, Inc.
IEEE
nitted without license from IHS

Not for Resale

Recognized as an
American National Standard (ANSI)

IEEE Std 1560™-2005

IEEE Standard for Methods of Measurement of Radio-Frequency Power-Line Interference Filter in the Range of 100 Hz to 10 GHz

Sponsor

Standards Development Committee
of the
IEEE Electromagnetic Compatibility Society

Approved 25 January 2006

American National Standards Institute

Approved 22 September 2005

IEEE-SA Standards Board

Abstract: Uniform methods of measurements of radio-frequency power-line interference filter attenuation performance in the range of 100 Hz to 10 GHz are set forth. Nonloaded and loaded attenuation measurements are presented with varying source impedance, including radio-frequency current injection with linear and nonlinear load impedances. H- and S-parameter measurements are introduced for modeling results. New methods for placing filter performance criteria on a filter label are also included.
Keywords: attenuation measurements, crest factor, dB, electromagnetic interference power-line filters, EMI/RFI filters, insertion loss, LISN, no-load insertion loss, nonlinear load, radio-frequency current injection, S-parameters

---

The Institute of Electrical and Electronics Engineers, Inc.
3 Park Avenue, New York, NY 10016-5997, USA

Copyright © 2006 by the Institute of Electrical and Electronics Engineers, Inc.
All rights reserved. Published 24 February 2006. Printed in the United States of America.

IEEE is a registered trademark in the U.S. Patent & Trademark Office, owned by the Institute of Electrical and Electronics Engineers, Incorporated.

Print: ISBN 0-7381-4808-3 SH95375
PDF: ISBN 0-7381-4809-1 SS95375

No part of this publication may be reproduced in any form, in an electronic retrieval system or otherwise, without the prior written permission of the publisher.

Copyright The Institute of Electrical and Electronics Engineers, Inc.
Provided by IHS under license with IEEE
No reproduction or networking permitted without license from IHS
Not for Resale

IEEE Standards documents are developed within the IEEE Societies and the Standards Coordinating Committees of the IEEE Standards Association (IEEE-SA) Standards Board. The IEEE develops its standards through a consensus development process, approved by the American National Standards Institute, which brings together volunteers representing varied viewpoints and interests to achieve the final product. Volunteers are not necessarily members of the Institute and serve without compensation. While the IEEE administers the process and establishes rules to promote fairness in the consensus development process, the IEEE does not independently evaluate, test, or verify the accuracy of any of the information contained in its standards.

Use of an IEEE Standard is wholly voluntary. The IEEE disclaims liability for any personal injury, property or other damage, of any nature whatsoever, whether special, indirect, consequential, or compensatory, directly or indirectly resulting from the publication, use of, or reliance upon this, or any other IEEE Standard document.

The IEEE does not warrant or represent the accuracy or content of the material contained herein, and expressly disclaims any express or implied warranty, including any implied warranty of merchantability or fitness for a specific purpose, or that the use of the material contained herein is free from patent infringement. IEEE Standards documents are supplied "**AS IS**."

The existence of an IEEE Standard does not imply that there are no other ways to produce, test, measure, purchase, market, or provide other goods and services related to the scope of the IEEE Standard. Furthermore, the viewpoint expressed at the time a standard is approved and issued is subject to change brought about through developments in the state of the art and comments received from users of the standard. Every IEEE Standard is subjected to review at least every five years for revision or reaffirmation. When a document is more than five years old and has not been reaffirmed, it is reasonable to conclude that its contents, although still of some value, do not wholly reflect the present state of the art. Users are cautioned to check to determine that they have the latest edition of any IEEE Standard.

In publishing and making this document available, the IEEE is not suggesting or rendering professional or other services for, or on behalf of, any person or entity. Nor is the IEEE undertaking to perform any duty owed by any other person or entity to another. Any person utilizing this, and any other IEEE Standards document, should rely upon the advice of a competent professional in determining the exercise of reasonable care in any given circumstances.

Interpretations: Occasionally questions may arise regarding the meaning of portions of standards as they relate to specific applications. When the need for interpretations is brought to the attention of IEEE, the Institute will initiate action to prepare appropriate responses. Since IEEE Standards represent a consensus of concerned interests, it is important to ensure that any interpretation has also received the concurrence of a balance of interests. For this reason, IEEE and the members of its societies and Standards Coordinating Committees are not able to provide an instant response to interpretation requests except in those cases where the matter has previously received formal consideration. At lectures, symposia, seminars, or educational courses, an individual presenting information on IEEE standards shall make it clear that his or her views should be considered the personal views of that individual rather than the formal position, explanation, or interpretation of the IEEE.

Comments for revision of IEEE Standards are welcome from any interested party, regardless of membership affiliation with IEEE. Suggestions for changes in documents should be in the form of a proposed change of text, together with appropriate supporting comments. Comments on standards and requests for interpretations should be addressed to:

Secretary, IEEE-SA Standards Board

445 Hoes Lane

Piscataway, NJ 08854

USA

NOTE—Attention is called to the possibility that implementation of this standard may require use of subject matter covered by patent rights. By publication of this standard, no position is taken with respect to the existence or validity of any patent rights in connection therewith. The IEEE shall not be responsible for identifying patents for which a license may be required by an IEEE standard or for conducting inquiries into the legal validity or scope of those patents that are brought to its attention.

Authorization to photocopy portions of any individual standard for internal or personal use is granted by the Institute of Electrical and Electronics Engineers, Inc., provided that the appropriate fee is paid to Copyright Clearance Center. To arrange for payment of licensing fee, please contact Copyright Clearance Center, Customer Service, 222 Rosewood Drive, Danvers, MA 01923 USA; +1 978 750 8400. Permission to photocopy portions of any individual standard for educational classroom use can also be obtained through the Copyright Clearance Center.

Copyright The Institute of Electrical and Electronics Engineers, Inc.
Provided by IHS under license with IEEE
No reproduction or networking permitted without license from IHS
Not for Resale

Introduction

This introduction is not part of IEEE Std 1560-2005, IEEE Standard for Methods of Measurement of Radio-Frequency Power-Line Interference Filter in the Range of 100 Hz to 10 GHz.

The interest in low-voltage ac/dc radio interference filters has grown due to strict conducted emissions requirements of many end-use equipment, appliances, and medical equipment standards. However, tests that predict the performance of these filters in realistic situations have not been forthcoming. Until recently, general design considerations were based on filter performance as a result of matched-impedance test methods. The popular test specification for the measurement of electrical filter insertion loss is MIL-STD-220A-1978 [B14],[a] now MIL-STD-220B,[b] which also uses the matched-impedance method. The test methods found in MIL-STD-220B are best suited for quality control during quantity production of power-line filters. The specified matched-impedance test conditions are satisfactory for quality-control purposes but do not represent conditions that exist in actual circuits or installations. The power source impedances in actual installations are typically much lower than 50 ohms at frequencies in the filter stop band. These methods should be the last step in the filter design and specification process. All too often, matched-impedance method specifications are improperly used as the initial and primary design specification. The insertion loss measurement results may bear little or no resemblance to the actual performance of the filter as installed.

Because the nature of end-use loads and conducted emissions has changed significantly since the concept of interference filters was developed, manufacturers of filters have put forth many efforts in the past few years to enhance filter design and performance. Characterization of filters from the field and on-site investigations indicated that many filters were operating in electrical environments where filter performance was substantially degraded because of very low source and load impedances. Laboratory tests and research to understand fully the performance of power-line filters in these realistic environments were conducted with the cooperation of the respective manufacturers. As a part of the research, existing filter standards were reviewed and studied in a laboratory environment. These studies indicated that improved standardized test methods were needed to permit the manufacturer to describe, and the end user to understand and predict, how a given filter would perform in the user's environment. With participation from filter manufacturers and a need to develop a new filter standard to support the filter industry, efforts were initiated by the individuals in the Working Group to develop a new standard.

Notice to users

Errata

Errata, if any, for this and all other standards can be accessed at the following URL: http://standards.ieee.org/reading/ieee/updates/errata/index.html. Users are encouraged to check this URL for errata periodically.

Interpretations

Current interpretations can be accessed at the following URL: http://standards.ieee.org/reading/ieee/interp/index.html.

---

[a]The numbers in brackets correspond to those of the bibliography in Annex A.

[b]Information on references can be found in Clause 2.

Copyright © 2006 IEEE. All rights reserved.

Copyright The Institute of Electrical and Electronics Engineers, Inc.
Provided by IHS under license with IEEE
No reproduction or networking permitted without license from IHS
Not for Resale

Patents

Attention is called to the possibility that implementation of this standard may require use of subject matter covered by patent rights. By publication of this standard, no position is taken with respect to the existence or validity of any patent rights in connection therewith. The IEEE shall not be responsible for identifying patents or patent applications for which a license may be required to implement an IEEE standard or for conducting inquiries into the legal validity or scope of those patents that are brought to its attention.

Participants

At the time this standard was completed, the IEEE EMC SDCom, TC-4 P1560 Standard for Methods of Measurement of Radio-Frequency Power-Line Interference Filter in the Range of 100 Hz to 10 GHz Working Group had the following membership:

Kermit Phipps, *Chair*
Bob Scully, *Co-Chair*
Frank Eliot, *Secretary*
Philip Keebler, *Editor*
Nanette Jones, *Graphics Designer*

Frédéric Broydé
Evelyne Clavelier
William Croisant
Awerkamp Dwayne
Paul Ewing
Terry Forsythe
Nissen Isakov
Thomas S. Key
John Kraemer
David Larrabee
Bill Liles
Arshad Mansoor
François D. Martzloff
Michael McInerney
James Muccioli
Richard Ozenbaugh
Dale Svetanoff
Rafik Stephanian
Romesh Rajput
Werner Schaefer

The following members of the individual balloting committee voted on this standard. Balloters may have voted for approval, disapproval, or abstention.

Marcos Andrade
David Armitage
Mark Bushnell
Johan Catrysse
Keith Chow
Byron Davenport
Hugh Denny
Dr. Guru Dutt Dhingra
Andrew Drozd
Frank Eliot
Daniel Hoolihan
Yuri Khersonsky
John Kraemer
Edward McCall
Michael McInerney
Charles Ngethe
Iulian Profir
Michael Roberts
Werner Schaefer
Jacob Schanker
Vaughn Sheline
Thomas Starai
Dale Svetanoff
David Traver
Jim Walker

--`,,```,,,,````-`-`,,`,,`,`,,`---
Copyright © 2006 IEEE. All rights reserved.
Copyright The Institute of Electrical and Electronics Engineers, Inc.
Provided by IHS under license with IEEE
No reproduction or networking permitted without license from IHS
Not for Resale

When the IEEE-SA Standards Board approved this standard on 22 September 2005, it had the following membership:

Steve M. Mills, *Chair*
Richard H. Hulett, *Vice Chair*
Don Wright, *Past Chair*
Judith Gorman, *Secretary*

Mark D. Bowman
Dennis B. Brophy
Joseph Bruder
Richard Cox
Bob Davis
Julian Forster*
Joanna N. Guenin
Mark S. Halpin
Raymond Hapeman
William B. Hopf
Lowell G. Johnson
Herman Koch
Joseph L. Koepfinger*
David J. Law
Daleep C. Mohla
Paul Nikolich
T. W. Olsen
Glenn Parsons
Ronald C. Petersen
Gary S. Robinson
Frank Stone
Malcolm V. Thaden
Richard L. Townsend
Joe D. Watson
Howard L. Wolfman

*Member Emeritus

Also included are the following nonvoting IEEE-SA Standards Board liaisons:

Satish K. Aggarwal, *NRC Representative*
Richard DeBlasio, *DOE Representative*
Alan H. Cookson, *NIST Representative*

Michael D. Fisher
IEEE Standards Project Editor

Copyright © 2006 IEEE. All rights reserved.

Copyright The Institute of Electrical and Electronics Engineers, Inc.
Provided by IHS under license with IEEE
No reproduction or networking permitted without license from IHS
Not for Resale

Contents

1. Overview 1

1.1 Scope 1
1.2 Purpose 1
1.3 Application of test methods and use of this document 1

2. Normative references 4

3. Definitions 5

4. Safety 8

4.1 Stored capacitor energy 8
4.2 RF hazards 8
4.3 Voltages and currents 8

5. Measurement instrumentation 9

5.1 General 9
5.2 Calibration of measuring equipment 9
5.3 Measurement tolerances 9

6. Measurement uncertainty 9

6.1 General 9
6.2 Calculation of measurement uncertainty 9

7. Test equipment and minimum specifications 10

7.1 AC power source 10
7.2 Alternating current source 10
7.3 DC power source 10
7.4 Direct current source 10
7.5 Ammeter 10
7.6 Buffer networks 10
7.7 Differential voltage probes 11
7.8 Dynamic range 11
7.9 Ground plane 11
7.10 Impedance-transforming networks 11
7.11 Line-impedance stabilization network 11
7.12 Linear load 12
7.13 Nonlinear load 12
7.14 Oscilloscope 12
7.15 Power amplifier 13
7.16 Power analyzer 13
7.17 Attenuators, 100 dB 13
7.18 RF matching network 13
7.19 RF bulk current injection probe 13
7.20 RF current transformers 13
7.21 RF injector 13
7.22 Shielded enclosure 13

Copyright © 2006 IEEE. All rights reserved.

Copyright The Institute of Electrical and Electronics Engineers, Inc.
Provided by IHS under license with IEEE
No reproduction or networking permitted without license from IHS
Not for Resale

7.23 Spectrum analyzer or network analyzer 14
7.24 S-parameter test set 14
7.25 Tracking generator 14

8. Test facilities 14

8.1 Standard testing conditions 14
8.2 General operating conditions 14
8.3 Grounding 15
8.4 Regulatory agency restrictions 15
8.5 Screened equipment and shielding requirements 15
8.6 RF test fixture and mounting requirements 15
8.7 Source impedance 15
8.8 Test equipment noise floor level 15
8.9 Attenuators, phase splitters, power splitters, and network matching pads 16
8.10 Lead dress 16

9. Divisions of frequency ranges and recommended sensitivity 16

10. Required measurement methods 17

10.1 Quality assurance testing—No load (10 kHz to 1 GHz) 18
10.2 Quality assurance test—Loaded (10 kHz to 20 MHz) 20
10.3 RF characteristic test, mismatched impedance—No load (100 kHz to 30 MHz) 23
10.4 Variable source impedance attenuation measurement (100 Hz to 100 kHz) 25
10.5 Attenuation measurement (100 kHz to 30 MHz) 28
10.6 Aperture leak testing by electric fields (1 GHz to 10 GHz) 31
10.7 Voltage drop and waveform quality test (linear/nonlinear loading) 33
10.8 S-parameter measurement (100 Hz to 30 MHz) 35

11. Record keeping and data handling 39

Annex A (informative) Bibliography 40

Annex B (normative) Filter labeling 42

Annex C (informative) Waveform quality and harmonic loading-related performance of power-line filters 44

Annex D (informative) S-Parameters 54

Annex E (informative) Line-impedance stabilization networks 62

Annex F (informative) Frequency response curves 66

Annex G (informative) Designing RFI filters for their worst-case behavior 70

Annex H (informative) Estimating measurement uncertainty 78

Annex I (informative) Glossary 82

Copyright © 2006 IEEE. All rights reserved.

Copyright The Institute of Electrical and Electronics Engineers, Inc.
Provided by IHS under license with IEEE
No reproduction or networking permitted without license from IHS
Not for Resale

IEEE Standard for Methods of Measurement of Radio-Frequency Power-Line Interference Filter in the Range of 100 Hz to 10 GHz

1. Overview

1.1 Scope

The scope of this standard is to develop a standard method of measurement for evaluating the electromagnetic and radio frequency suppression capability of power-line filters in the frequency range of 100 Hz to 10 GHz. This will apply to electromagnetic interference/radio-frequency interference (EMI/RFI) filters in general, i.e., dc, single-phase or polyphase systems rated for 600 V and below 1000 A. The method of measurement will describe general considerations, such as the method of standardizing source impedance for nonlinear loads, temperature rise, attenuation measurement, components, and or derating requirements when supplying nonsinusoidal load currents and operating in matched- or mismatched-impedance environments.

1.2 Purpose

The purpose of this standard is to provide measurements that evaluate the performance of power-line interference filters in practical installations involving varying load and source impedances. These factors are not usually considered in design and performance verification testing of EMI/RFI filters. Both manufacturers and end users should benefit from this standard that defines the ranges and environment, expected effects, and test methods to verify filter attributes.

1.3 Application of test methods and use of this document

Clause 10 describes filter performance measuring techniques. Although it might be desirable to characterize each production filter in accordance with all the measurement methods described, it is generally not economically feasible to do so. Usually, only first-design filters will be analyzed through multiple performance tests. These tests establish a performance baseline for that filter design. Subsequent production units of the same design may be tested using matched-impedance techniques to ensure that there is no significant deviation from the original due to component or assembly changes.

Copyright © 2006 IEEE. All rights reserved.

Copyright The Institute of Electrical and Electronics Engineers, Inc.
Provided by IHS under license with IEEE
No reproduction or networking permitted without license from IHS
Not for Resale

Case design and assembly testing may be required on a need basis to ensure control of radiated emissions from the filter at frequencies above 1 GHz. There are several methods for observing case integrity that do not employ RF testing to ensure proper case construction. These include the die penetration method. However, it is recommended that radiated field testing be performed at the installation site with the filter in its final configuration on a shielded enclosure for best results at frequencies above 1 GHz. Refer to IEEE Std 299™.[1] Where it is not possible to perform the test with the filter in its final configuration, then reasonable screening or enclosures may be used.

Clause 10 is divided into eight test methods (see 10.1–10.8), alphabetically coded in Table B.1. It is desirable to label all power-line filters in a similar manner in accordance with Annex B. The nameplate data may be derived from the different tests outlined in Clause 10. Annex F illustrates generic filter curves and points of interest such as the 3 dB point, 20 dB point, and the ratio calculations of the shape factor, which may be requested to be printed with the filter curves in the original baseline data.

1.3.1 Use of test methods

1.3.1.1 Quality assurance tests

— Quality assurance—No load (10 kHz to 1 GHz) (see 10.1)

— Quality assurance—Loaded (10 kHz to 20 MHz) (see 10.2)

The quality assurance (QA) test follows traditional matched-impedance testing methods currently in practice by most manufacturers. The frequency ranges are selected based on reproducibility, QA control indicators, and reasonable performance frequencies where the filter might be operating under varying loads.

1.3.1.2 Mismatched-impedance tests

— RF characteristics mismatched impedance—No load (100 kHz to 30 MHz) (see 10.3)

The mismatched-impedance subclause finds its origins in the tradition of CISPR 17. Using a set of mismatched source and load impedance, this low-cost performance indicator may be used when current injection techniques are not practical or cost-effective. For example, the 0.1 ohm and 100 ohm impedances used in the no-load test setup result in an apparent insertion loss without the filter of approximately 50 dB, limiting filter dynamic range testing to approximately 60 dB. It may be necessary to use pre- or post-amplifiers if a larger dynamic range is desired.

Other impedances may be used when the source and load impedances are known. Further details may be found in CISPR 17 regarding the construction of the impedance networks.

1.3.1.3 RF current injection tests

— Variable source impedance attenuation measurement (100 Hz to 100 kHz) (see 10.4)

— Attenuation measurement (100 kHz to 30 MHz) (see 10.5)

The current injection method has been described in documents such as MIL-STD-461E-1999 [B15][2] for conducted susceptibility testing. This method is becoming more popular in the user community. The intent of these tests is to provide meaningful source impedance and realistic load testing. The data from these tests will more accurately predict the performance of a filter when installed on a typical power conductor. The following selection of source impedance and load characteristics should be followed:

[1]Information on references can be found in Clause 2.

[2]The numbers in brackets correspond to those of the bibliography in Annex A.

Copyright © 2006 IEEE. All rights reserved.
Copyright The Institute of Electrical and Electronics Engineers, Inc.
Provided by IHS under license with IEEE
No reproduction or networking permitted without license from IHS Not for Resale

At low frequencies (below 100 kHz), power-line source impedance characteristics are primarily related to the source's ability to deliver the current with minimum voltage distortion. Hence, it is important to characterize the load for these frequencies without the filter in the circuit. The desired parameters to be reached are a nonlinear load whose current crest factor is approximately 2.2 and a voltage distortion below 2%. This would be qualified as a "stiff" source. Once the load crest factor has been determined, then a variable or fixed reactor may be introduced to provide a voltage drop of 3% to 9% at the current rating of load used for the test without the filter in place, thus providing a "soft" source. For further information regarding nonlinear loading and source information, refer to Annex C.

For frequencies above 100 kHz, the typical power-line characteristic impedance is observed to be approximately 50 ohms. Line-impedance stabilization network (LISN) or artificial mains network (AMN) is used to provide this standardized source impedance during testing. The popular 50 μH LISN has been determined to be best suited for this application and has its origin in such test practices as MIL-STD-461E-1999 [B15], and CISPR 16-2: 2003 [B4], or IEC 61000-4-3:2002 [B5]. For further details regarding the use and selection of the 5 μH LISN, refer to Annex E.

1.3.1.4 Aperture leak tests

— Aperture leak test selection (see 10.6)

To determine realistic filter performance above 1 GHz, it is necessary to perform radiated electric field tests to determine aperture leaks and mounting issues. For typical power-line filters, IEEE Std 299 should be referenced. Mode stirred chamber setups are not required. Basic radiated emission test setups found in MIL-STD-461E-1999 [B15] may be employed for the filter aperture testing and are illustrated in the test setup. Measurements are taken in three dimensions at about 2 m separation of the chosen antenna set. Either matched bow ties, dipoles, or microwave horns may be used.

1.3.1.5 Voltage drop and waveform quality tests

— Voltage drop and waveform quality test (linear/nonlinear loading) (see 10.7)

Equipment operating within a shielded enclosure often presents a nonlinear load to the ac power supply. The nonlinearity arises from bridge rectifiers within the equipment charging a filter capacitor at each peak of the ac voltage. The pulses of current drawn by the equipment, combined with the inductance presented by the power-line filters, can cause serious distortion (flat-topping) of the ac voltage following the filter. If the voltage distortion is sufficiently serious, equipment malfunctions can result. Refer to Annex C for further details.

1.3.1.6 S- and Z-parameter measurement set

— S-parameter measurement (100 Hz to 30 MHz) (see 10.8)

In today's electromagnetic compatibility (EMC) environment, it is crucial to gain an understanding of the effects and parameters of filters, sources, and loads. Annex G provides information on designing filters for worst-case behavior and understanding the impedance domain for the networks. From Annex G we can see that a filter is a complex network that can be broken down into H- and S-parameters. Also sources and loads may be described accordingly. Annex D describes the measurement techniques and use of such parameters and how to model the data provided to choose a filter best matched for the intended installation. These methods are best used but not limited to when designing systems for fuel cells, mission-critical loads, and various distributed generation sources.

Copyright © 2006 IEEE. All rights reserved. --`,,```,,,,````-`-`,,`,,`,`,,`---

Copyright The Institute of Electrical and Electronics Engineers, Inc.
Provided by IHS under license with IEEE
No reproduction or networking permitted without license from IHS Not for Resale

1.3.2 Use of test methods

In some cases, various types of standards have been used for specifications. In the case of applying these test methods, it should be noted that this standard is not a filter specification but rather a standard method of test for filter performance. In order to assist in selecting appropriate tests that may be used to ensure that a given specification may be met, Table 1 is provided as a suggested guidance. However, testing should not be limited to the selection menu, but should be based on available information and specification. For instance, if a specification states a method (e.g., MIL-STD-220B), then it would only qualify as a QA test and would not necessarily meet the intended specification.

2. Normative references

The following referenced documents are indispensable for the application of this standard. For dated references, only the edition cited applies. For undated references, the latest edition of the referenced document (including any amendments or corrigenda) applies.

ANSI/IEEE Std C63.2™, American National Standard for Electromagnetic Noise and Field Strength Instrumentation, 10 Hz to 40 GHz—Specifications.[3]

ANSI Z540.1, Calibration Laboratories and Measuring and Test Equipment General Requirements.

ANSI Z540.2, U.S. Guide to the Expression of Uncertainty in Measurement.

CISPR 17, Methods of Measurement of the Suppression Characteristics of Passive Radio Interference Filters and Suppression Components.[4]

IEEE Std 299™, IEEE Standard Method for Measuring the Effectiveness of Electromagnetic Shielding Enclosures.[5, 6]

IEEE Std C95.1™, IEEE Standard for Safety Levels with Respect to Human Exposure to Radio Frequency Electromagnetic Fields, 3 kHz to 300 GHz.

IEEE/ASTM SI 10™, IEEE/ASTM Standard for Use of the International System of Units (SI): The Modern Metric System.

ISO/IEC 17025, General Requirements for the Competence of Testing and Calibration Laboratories.[7]

MIL-STD-220B, Method of Insertion Loss Measurement.[8]

---

[3]ANSI publications are available from the Sales Department, American National Standards Institute, 25 West 43rd Street, 4th Floor, New York, NY 10036, USA (http://www.ansi.org/).

[4]CISPR documents are available from the International Electrotechnical Commission, 3, rue de Varembé, Case Postale 131, CH 1211, Genève 20, Switzerland/Suisse (http://www.iec.ch/). They are also available in the United States from the Sales Department, American National Standards Institute, 11 West 42nd Street, 13th Floor, New York, NY 10036, USA.

[5]IEEE publications are available from the Institute of Electrical and Electronics Engineers, Inc., 445 Hoes Lane, Piscataway, NJ 08854, USA (http://standards.ieee.org/).

[6]The IEEE standards or products referred to in this clause are trademarks of the Institute of Electrical and Electronics Engineers, Inc.

[7]ISO/IEC publications are available from the ISO Central Secretariat, Case Postale 56, 1 rue de Varembé, CH-1211, Genève 20, Switzerland/Suisse (http://www.iso.ch/). ISO/IEC publications are also available in the United States from Global Engineering Documents, 15 Inverness Way East, Englewood, CO 80112, USA (http://global.ihs.com/). Electronic copies are available in the United States from the American National Standards Institute, 25 West 43rd Street, 4th Floor, New York, NY 10036, USA (http://www.ansi.org/).

[8]MIL publications are available from Customer Service, Defense Printing Service, 700 Robbins Ave., Bldg. 4D, Philadelphia, PA 19111-5094.

Copyright © 2006 IEEE. All rights reserved.
Copyright The Institute of Electrical and Electronics Engineers, Inc.
Provided by IHS under license with IEEE
No reproduction or networking permitted without license from IHS
Not for Resale

NIST Special Publication 330, The International System of Units (SI), Barry N. Taylor, ed.[9]

NIST TN 1297, Guidelines for Evaluating and Expressing Uncertainty of NIST Measurement Results, Barry N. Taylor and Chris E. Kuyatt.

3. Definitions

For the purposes of this standard, the following terms and definitions apply. *The Authoritative Dictionary of IEEE Standards Terms* [B6] or Annex I should be referenced for terms not defined in this clause.

3.1 buffer networks: A multiport network used for inductor saturation tests. They are acceptable as quality control/quality assurance (QC/QA) tools for production testing. (CISPR 17 and MIL-STD-220B).

3.2 decibel (dB): A unit of measure for the ratio of two amounts of voltage, current, and power. With E_1 and E_2 designating the two amounts of voltage, and n the number of decibels denoting their ratio as follows:

For voltage, the ratio is computed:

$$n(dB) = 20 \log\left(\frac{E_1}{E_2}\right)$$

where

n is the number of decibels
E_1 is the measured load voltage with the filter in the circuit
E_2 is the measured load voltage with the filter out of the circuit

For current, the ratio is computed:

$$n(dB) = 20 \log\left(\frac{I_1}{I_2}\right)$$

where

n is the number of decibels
I_1 is the measured load current with the filter in the circuit
I_2 is the measured load current with the filter out of the circuit

For power, the ratio is computed:

$$n(dB) = 10 \log\left(\frac{P_1}{P_2}\right)$$

where

n is the number of decibels
P_1 is the measured load power with the filter in the circuit
P_2 is the measured load power with the filter out of the circuit

[9] NIST publications are available from www.nist.gov/.

Copyright © 2006 IEEE. All rights reserved.

Copyright The Institute of Electrical and Electronics Engineers, Inc.
Provided by IHS under license with IEEE
No reproduction or networking permitted without license from IHS
Not for Resale

3.3 displacement power factor: The ratio of the active power of the fundamental wave, in watts, to the apparent power of the fundamental wave, in volt-amperes. This is the cosine of the phase angle by which the fundamental current lags the fundamental voltage. This is the power factor as seen in utility metering by watthour and varhour meters, assuming that the ac voltages are sinusoidal.

3.4 distortion factor (harmonic factor): The ratio of the rms of the harmonic content to the rms value of the fundamental quantity, expressed as a percent of the fundamental, as shown in the following equation:

$$df = \left[\sum_{k=2}^{n} \frac{A_k^2}{A_l^2} \right]^{1/2}$$

where

A_l is the rms value of the fundamental component
k is a number from 2 to n
A_k is the rms values of the kth harmonic components

3.5 error (relative): The ratio of an error to the correct value.

3.6 insertion loss: The ratio of voltages, current, or power, at a given frequency, appearing across the line immediately beyond the point of insertion, before and after insertion of the filter under test. (CISPR 17)

3.7 isolation attenuators: An isolation attenuator should be a resistive T network having a 50-ohm input impedance and a 50-ohm output impedance. The attenuator shall have a minimum insertion loss of 6 dB to 10 dB measured in a 50-ohm system. Looking into either end of each attenuator with the other end terminated into 50 ohms, the voltage standing-wave ratio (VSWR) shall be a maximum of 1.25 to 1 from dc to 10 GHz. The power rating of the attenuator should be such that when the system is subjected to the maximum signal power, it does not degrade from heating. These attenuators are for the purpose of obtaining a standard 50-ohm termination for all attenuation measurements. (MIL-STD-220B).

3.8 linear load: A load that draws a sinusoidal current wave when supplied by a sinusoidal voltage source.

NOTE—A typical current waveform for a linear load is shown in the following figure.[10]

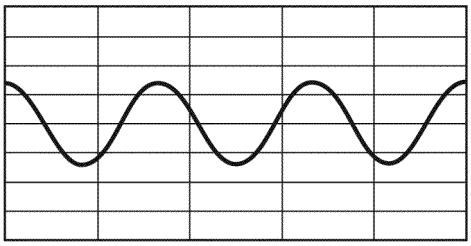

Example of current drawn by linear load

3.9 metric units: A system of basic measures that are defined by the International System of Units based on "Le Systèm International d'Unités (SI)," of the National Institute of Standards and Technology. (NIST Special Publication 330).

3.10 nonlinear load: A load that draws a nonsinusoidal current even when supplied by a sinusoidal voltage source. An electrical device that in steady-state operation has impedance that varies during the cycle of the input voltage waveform.

NOTE 1—See IEEE Std 1250™-1995 [B7].

[10]Notes in text, tables, and figures are given for information only and do not contain requirements needed to implement the standard.

Copyright © 2006 IEEE. All rights reserved.
Copyright The Institute of Electrical and Electronics Engineers, Inc.
Provided by IHS under license with IEEE
No reproduction or networking permitted without license from IHS
Not for Resale

NOTE 2—A typical current waveform for a nonlinear load is shown in the following figure.

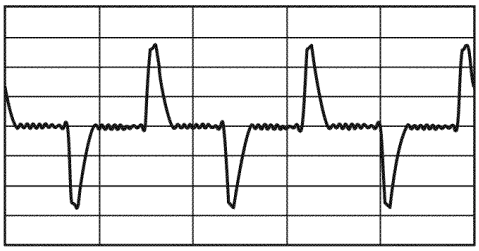

Example of current drawn by nonlinear load

3.11 rating: The designation of an operating limit for a device.

NOTE—Such operating characteristics as current, voltage, frequency, etc., may be given in the rating.

3.12 total harmonic distortion (THD): *See:* **distortion factor.**

3.13 true power factor: *See:* **displacement power factor.**

3.14 true rms: Refers to the use of a meter that displays an rms value calculated from the average of instantaneous readings rather than an rms value that is calculated from an average reading. The difference is that the instantaneous method allows the meter to display the correct rms value for waveforms that are not sinusoidal shaped while the other does not. The square root of the mean value of the square of the voltage values during a complete cycle.

3.15 zero-crossing: A waveform that is graphed on a rectangular-coordinate system is said to have a zero-crossing when it passes through a horizontal line drawn through the origin (x-axis). A sinusoidal-shaped, 60 Hz waveform has two zero-crossings per period, one per slope.

NOTE—See the following figures.

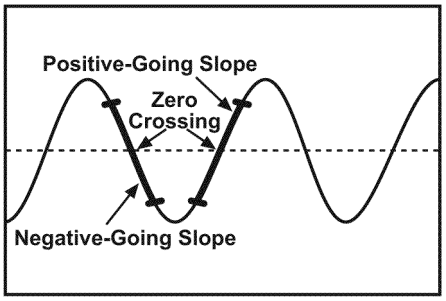

Sinusoidal-shaped waveform showing location of zero-crossings

Copyright © 2006 IEEE. All rights reserved.

Copyright The Institute of Electrical and Electronics Engineers, Inc.
Provided by IHS under license with IEEE
No reproduction or networking permitted without license from IHS
Not for Resale

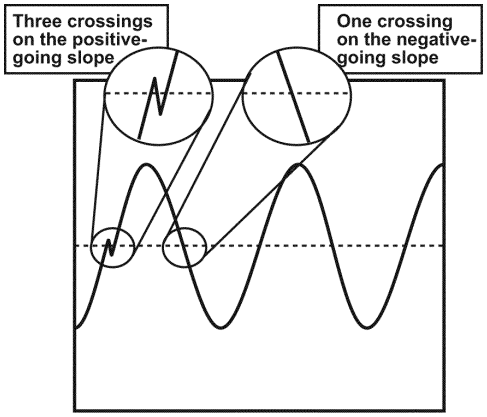

Sinusoidal-shaped waveform showing details of zero-crossings

4. Safety

Many of the tests described in this standard are inherently hazardous. The safeguards for personnel and property described in this clause are essential. All testing shall be conducted by technically qualified personnel who are knowledgeable about the test and measurement equipment, and filters under test, and aware of the hazards of such testing.

4.1 Stored capacitor energy

Capacitors in a test circuit or a device under test might retain stored energy in the form of electric charge. If a filter is required to have bleeder resistors as part of its design, those resistors shall be installed and functional when testing the filter in accordance with this document. Suitable bleeders or short-circuiting devices should be used to ensure operator safety against any such trapped charge after a filter is de-energized.

4.2 RF hazards

Some tests in this standard will result in electromagnetic fields that are potentially dangerous to personnel. The permissible exposure levels of IEEE Std C95.1 shall not be exceeded in areas where personnel are present. Safety procedures and devices shall be used to prevent accidental exposure of personnel to RF hazards. During these tests, precautions must be implemented to avoid inadvertent exposure of personnel to fields.

4.3 Voltages and currents

The voltage and current levels generally associated with testing radio interference filter, especially the power-line type filters, may be lethal and are well above those considered safe. Precautions should be taken when connecting or disconnecting equipment, filters, and power sources to avoid the potential for electric shock.

Copyright © 2006 IEEE. All rights reserved.
Copyright The Institute of Electrical and Electronics Engineers, Inc.
Provided by IHS under license with IEEE
No reproduction or networking permitted without license from IHS
Not for Resale

5. Measurement instrumentation

5.1 General

The use of proper measurement instrumentation is critical to obtaining accurate and reproducible test results. Various measuring accessories may be needed during a test depending upon the particular measurements to be performed. RF sweep methods are preferred, and point-to-point measurement methods are discouraged.

5.2 Calibration of measuring equipment

A calibration system in accordance with ANSI Z540.1 or other equivalent organizations shall be used and maintained. The calibration of the instrumentation shall be verified frequently to ensure its accuracy. Adjustments may be made and correction factors applied where applicable as long as they are documented.

In addition to the measuring instrumentation, cables, LISNs, voltage and current probes, test facility, etc., are to be checked and verified as necessary on a regular basis to ensure accuracy of the test results and checked frequently for deterioration. Shielded cables used for testing must exhibit a shielding effectiveness that is at least 10 dB greater than the expected filter performance over the frequency range of interest. This will help to ensure that measurements less than 100 dB may be performed accurately (e.g., double-shielded cables providing 99% shielding coverage such as a RG-223/U cable equivalent or better).

5.3 Measurement tolerances

During electrical measurement processes, tolerances will vary with the device under test and what parameter is being measured. Unless otherwise stated for a particular measurement, the tolerance of the following parameters (items a through d) shall be as follows:

a) Frequency: ±2%

NOTE—Accuracies of ±0.1% may be obtained if desired based on bandwidth resolution and sweep rate.

b) Amplitude (at a measurement receiver): ±2 dB

c) Amplitude (of a measurement system that includes measurement receivers, transducers, cables, etc.): ±3 dB

d) Time (waveforms): ±5%

6. Measurement uncertainty

6.1 General

Measurement uncertainty can be caused by many factors. The total uncertainty may have several contributors, including (but not limited to) the test equipment used and its calibration accuracy, signal loss of test interconnection cables (which varies on a per-unit length basis by frequency), type and number of connectors in the signal path, and the quality of the interface connection between the filter under test and the measurement setup. Cable resonances may also cause uncertainty.

6.2 Calculation of measurement uncertainty

Annex H discusses how uncertainty may be estimated using an example for the test method described in 10.1. Standard uncertainty, combined standard uncertainty, and expanded uncertainty are discussed.

Copyright © 2006 IEEE. All rights reserved.

Copyright The Institute of Electrical and Electronics Engineers, Inc.
Provided by IHS under license with IEEE
No reproduction or networking permitted without license from IHS
Not for Resale

7. Test equipment and minimum specifications

Test equipment and minimum specifications for performing tests are discussed in this clause. Measurement equipment shall be as specified in the individual test procedures of this standard. EMI measuring instrumentation characteristics may be found in ANSI/IEEE C63.2.

7.1 AC power source

An ac power source is required to supply power to linear and nonlinear loads, whose characteristics shall be a voltage equal to or less than the filter voltage rating. The power source shall be tested and supporting documentation attached to verify that the true-rms voltage of the power source does not change by more than 5% as the load (linear and nonlinear) is varied from 0% to 100%. The waveform of the power source voltage shall not have more than two zero-crossings per period as the load is varied from 0% to 100%. The use of 50 Hz or 60 Hz is satisfactory for filters rated at 50/60 Hz. For filters rated at other ac line frequencies, the ac power source shall provide power to the filter on at least one of the rated working frequencies.

7.2 Alternating current source

An alternating current source is required to supply an ac current whose characteristics shall be equal to 1.4 times the filter full rms current rating or equal to the full dc current rating if the filter is dc-rated only. The current source shall be tested and supporting documentation attached to verify that the regulation of the alternating current source is less than 2% for 1.4 times the full-rated load current. The alternating current source shall be floating and not connected to ground.

7.3 DC power source

A dc power source is required to supply power to linear and nonlinear loads, whose characteristics shall be a voltage equal to the filter dc voltage rating. The power source shall be tested and supporting documentation attached to verify that the dc power source voltage ripple factor is less than 2% for 1.4 times the full-rated load current. The dc power source shall be floating and not connected to ground.

7.4 Direct current source

A direct current source is required to supply a dc current whose characteristics shall be equal to 1.4 times the filter full rms current rating or equal to the full dc current rating for dc rated filter only. The power source shall be tested and supporting documentation attached to verify that the direct current source regulation is less than 2% for 1.4 times the full-rated load current. The direct current source shall be floating and not connected to ground.

7.5 Ammeter

An ammeter is required to measure and display the amount of current through the load. It must have the ability to measure true-rms current at three times the filter's rated current.

7.6 Buffer networks

Buffer networks are used for inductor saturation tests. The use of buffer networks is discouraged for design testing and verification of the inductor performance below frequencies of 100 kHz, where RF current injection techniques are preferred for filter evaluation. Buffer networks are acceptable as QC/QA tools for production testing and may come in many variations to accommodate the specified frequency band. Figure 1

Copyright © 2006 IEEE. All rights reserved.
Copyright The Institute of Electrical and Electronics Engineers, Inc.
Provided by IHS under license with IEEE
No reproduction or networking permitted without license from IHS
Not for Resale

illustrates a generic example of a buffer network, which should extend to 10 kHz for QC/QA purposes to better evaluate inductor saturation.

7.7 Differential voltage probes

Differential voltage probes are required to safely measure the line voltage and must be able to withstand the filter's rated voltages.

7.8 Dynamic range

The dynamic range is the amplitude difference between the maximum input level allowing linear operation of an instrument (or a test system) and the minimum signal that can be discerned by the instrument (or the test system). The range can be demonstrated by comparing the reference level to the measuring equipment noise floor. The reference level shall be observed to be a minimum 6 dB above the noise floor.

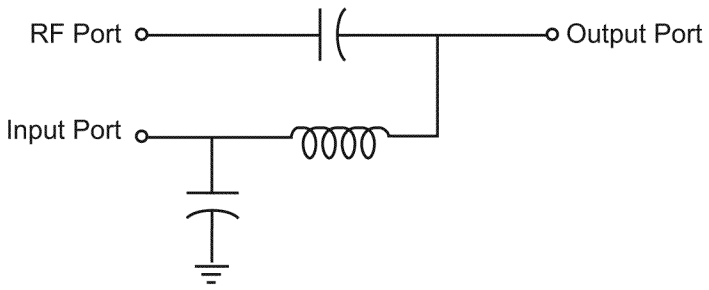

Figure 1—Generic example of a buffer network

7.9 Ground plane

The filter shall be installed on a ground plane that simulates the actual installation. If the actual installation is unknown or multiple installations are expected, then a metallic ground plane shall be used. When a ground plane is not present in the filter installation, the filter shall be placed on a nonconductive surface.

7.10 Impedance-transforming networks

Impedance-transforming networks are typically comprised of a set of wideband transformers whose turns ratio is 1.41:1 and 22:1. These networks are used to establish 50 ohms/0.1 ohms and 50 ohms/100 ohms impedance transfers. Refer to Schlicke [B17] and CISPR 17 for design guidance.

7.11 Line-impedance stabilization network

A LISN is a standard load impedance used to ensure repeatability and comparability of EMI measurements. It is an interface inserted at the measurement point between the EMI source and the power source (i.e., mains). It is sometimes referred to as an *artificial mains network* and may be used as a buffer network for ac/dc voltage sources and QA testing as a semi-realistic matched source impedance. Figure 2 illustrates the schematic for a typical 50 μH LISN.

Copyright © 2006 IEEE. All rights reserved.

Copyright The Institute of Electrical and Electronics Engineers, Inc.
Provided by IHS under license with IEEE
No reproduction or networking permitted without license from IHS
Not for Resale

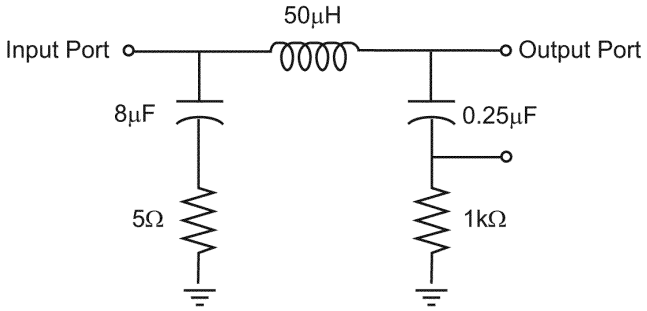

Figure 2—Specified typical LISN for realistic impedance testing from 100 kHz to 30 MHz

7.12 Linear load

Examples of linear loads are tungsten heaters, wire-wound ceramic resistors, or equivalent. They are to be used to draw sinusoidal-shaped current through the filter under test. The linear load shall be sized to draw the load current called for and shall exhibit a power factor between 0.95 lagging and 0.95 leading.

7.13 Nonlinear load

An example of a nonlinear load is a full-wave bridge-rectifier type, followed by a capacitor, as illustrated in Figure 3. This load shall be used to draw a nonlinear current through the filter under test. The capacitor and resistor shall be sized to draw current with a crest factor of 2.2 ± 0.2 (refer to Annex C) at the full-load rms rating of the filter when connected to the standard source (filter not connected). The crest factor is defined as the peak amplitude of the current divided by the rms value of the current, as show in Equation (1):

$$cf = \frac{I_{pk}}{I_{rms}} \tag{1}$$

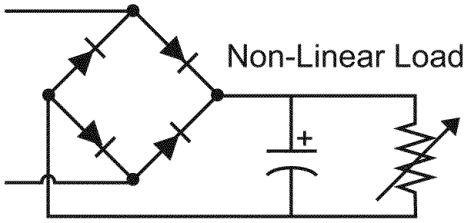

Figure 3—Simplified schematic of a nonlinear load

7.14 Oscilloscope

An oscilloscope is required to measure, display, and plot the recorded voltage waveforms. The oscilloscope should be dual channel with reading capability and include a minimum 1 MHz bandwidth.

Copyright © 2006 IEEE. All rights reserved.
Copyright The Institute of Electrical and Electronics Engineers, Inc.
Provided by IHS under license with IEEE
No reproduction or networking permitted without license from IHS
Not for Resale

7.15 Power amplifier

A power amplifier is a device used to amplify a signal to a level representative of a power signal. Several amplifiers may be required to amplify a signal from the signal generator. The amplifier must be able to amplify the signal to a level large enough to be injected on one side of the filter and measured on the other.

7.16 Power analyzer

A power analyzer is required to measure true-rms voltage, crest factor (peak voltage), and total harmonic distortion (THD). The analyzer must be able to measure up to the 13th harmonic.

7.17 Attenuators, 100 dB

An attenuation pad is used to provide the desired attenuation reference line, with respect to the filter, on the spectrum. As a minimum, the attenuator should have the following characteristics: a 1 W minimum power rating and calibrated to 100 dB over the specified frequency range. Attenuators may be fixed (i.e., an attenuation pad) or selectable (i.e., programmable attenuators).

7.18 RF matching network

An RF matching network may be required to improve the power transfer between the RF amplifier and RF current injection probe.

7.19 RF bulk current injection probe

An RF bulk current injection probe (BCIP) is used to inject large amounts of RF current onto the power conductor. Operating characteristics shall be as a minimum over the specified frequency range and a power-handling capability of 100 W (minimum).

7.20 RF current transformers

An RF current transformer (CT) is a high-frequency current probe that fits around a power conductor and is used to measure RF currents. As a minimum operating characteristic, the CT shall have a measurement range to accommodate the specified frequency range and a current rating of three times the filter rating.

7.21 RF injector

An RF current injector can be defined as any device such as a current injection probe, capacitive injector, and/or an RF switching current source.

7.22 Shielded enclosure

A shielded enclosure is required to shield the measurement side of the test setup from external radiated and conducted noise. An enclosure should be tested and approved per IEEE Std 299 to 10 dB below the lowest desired attenuation measurement and the specified frequency range, and at least 6 dB above the displayed noise floor.

Copyright © 2006 IEEE. All rights reserved.

Copyright The Institute of Electrical and Electronics Engineers, Inc.
Provided by IHS under license with IEEE
No reproduction or networking permitted without license from IHS
Not for Resale

7.23 Spectrum analyzer or network analyzer

A spectrum analyzer or network analyzer is recommended to measure and display the effective attenuation of a filter. The measuring instrument should be operational over at least the required frequency test range of the filter and have a dynamic range at least 6 dB greater than the expected insertion loss. Depending upon the test, two or more analyzers may be required.

7.24 S-parameter test set

S-parameters are called *scattering parameters.* They are a set of parameters describing the transmission, scattering, and reflection of traveling waves when a network is inserted into a transmission line. S-parameters are normally used to characterize N-port networks at higher frequencies, where simple models valid at high frequencies cannot be applied. S-parameters are normally measured as a function of frequency, so when looking at the formulae for S-parameters, it is important to note that frequency is implied and that the complex gain (i.e., magnitude and phase) is also assumed. For this reason, S-parameters are often called *complex scattering parameters.* They can be measured directly with network analyzer systems, which include S-parameter test sets. For information on S-parameter measurement test sets, refer to Annex D and Kraemer [B10].

7.25 Tracking generator

In conjunction with a spectrum analyzer, a tracking generator produces a signal whose frequency precisely tracks the tuning frequency of the spectrum analyzer. The tracking generator should have the following minimum specifications: a minimum tuning range from 9 kHz to 1 GHz and a 0 dBm source output level.

8. Test facilities

8.1 Standard testing conditions

Any comparison of the test results between two or more individual filters, or between results obtained in different laboratories, will be valid only if the tests have been performed under identical test conditions. If the tests are conducted primarily for exploratory purposes, consistency in environmental test conditions is not as important. The following test conditions are typical of accepted laboratory environments for conducted disturbances:

a) Temperature: 25 ± 5°C

b) Relative humidity: less than 85%

c) Sinusoidal test voltage: sinusoidal waveform, less than 5% THD

d) Voltage: 120 V (rms), unless otherwise required, tolerance: ±1%

e) Frequency: 60/50 Hz, unless otherwise required, tolerance: ±2 Hz (This tolerance allows for the use of generators.)

8.2 General operating conditions

All test areas shall be clean and free from clutter. The test setup shall be arranged in such a way that activities can be viewed and equipment connections clearly traceable by a visual inspection.

Copyright © 2006 IEEE. All rights reserved.
Copyright The Institute of Electrical and Electronics Engineers, Inc.
Provided by IHS under license with IEEE
No reproduction or networking permitted without license from IHS Not for Resale

8.3 Grounding

The signal grounding connections must be made at each end of a filter and not through a common point on a conductor extending from a filter. As with many filters, the attenuation characteristics require that reproducible high-attenuation measurements be made on the surface of the filter enclosure. Grounding of the test equipment and the filter to a ground reference plane is very important for the accuracy of measurements of the low- and high-end frequency bands to eliminate spurious background noise and to ensure proper RF return paths. When external terminals, connector pins, or equipment grounding conductors are available for safety ground connections and are used in the actual installation, they shall be connected to the ground plane. Refer to MIL-STD-461E-1999 [B15], subclause 4.3.8.6.1, for arrangement and length.

8.4 Regulatory agency restrictions

Some of the tests require high-level signals to be generated that could interfere with normal frequency assignments granted by the local regulatory agencies such as the Federal Communications Commission (FCC) and other agencies. All such testing should be conducted within a shielded enclosure.

8.5 Screened equipment and shielding requirements

It is recommended that the test be performed in a screen room. The filter and test equipment should be secured and tested on a ground reference plane as a minimum requirement. If it is found that the ambient background noise is high, then it may become necessary to construct a Faraday cage for the filter under test and the measuring equipment, whichever is easier. For example, if it is found that the signal generator generates excessive interference, the offending equipment should be screened within a Faraday-shielded enclosure or Faraday cage. If noise still continues to be a problem, then the filter and measuring equipment should be placed inside a screen room. If the problem continues, place the filter and measuring equipment on the inside of the screen room and the generator source on the outside.

8.6 RF test fixture and mounting requirements

The main purpose of the RF test fixture is to ensure that the RF connector is maintained in a stable and RF tight-sealed position throughout the test. Depending on the design of the filter, custom connectors and fixtures may be constructed and used. The filter and test equipment should be secured and tested on a ground reference plane. If the filter's intended installation does not support a ground plane, the filter shall be tested on an insulated surface.

8.7 Source impedance

Impedance (Z) is the resistance of a circuit to alternating current. Technically, impedance is the total opposition (including resistance and reactance) that a circuit has to passing alternating current. A high-impedance circuit tends to have low current. A low-impedance circuit tends to relatively have high current. The impedance of a voltage or current source is the impedance as seen from its terminals or from the load terminals of a branch circuit. If the source impedance equals the load impedance, this is called *matching impedances.* It results in maximum power transfer from the source to the load. The source shall be capable of delivering inrush current of at least eight times the rated current.

8.8 Test equipment noise floor level

During testing, the noise floor level should be measured with the filter removed, and the test fixture should be in the bypass mode. All auxiliary equipment should be turned on. The noise floor shall be at least 6 dB below the allowable specified limits for the filter under test. When measurements are made outside a

Copyright © 2006 IEEE. All rights reserved.

Copyright The Institute of Electrical and Electronics Engineers, Inc.
Provided by IHS under license with IEEE
No reproduction or networking permitted without license from IHS
Not for Resale

shielded enclosure, the tests shall be performed during times and conditions when the noise floor is at its lowest level. The noise floor level at the time of this measurement shall be recorded.

It is recommended that the isolation transformer meeting the requirements of the listed power source description in Clause 7 of this standard be used for powered testing. The use of isolation transformers may be necessary to reduce line noise and to ensure that accurate measurements are performed when using RF current injection techniques, particularly in the frequency band of 100 Hz to 100 kHz. The isolation transformer shall be sized to provide at least eight times the inrush current of the highest current rating.

8.9 Attenuators, phase splitters, power splitters, and network matching pads

Attenuators that provide isolation are typically specified as having a 50-ohm impedance and a 10 dB loss. The 50-ohm input requirements should be maintained to match the 50-ohm outputs of signal generators and standard instrument that measure RF signals. Fifty-ohm matching pads and the 10 dB requirement should be used for non 50-ohm impedance test equipment to ensure that the voltage levels are maintained and a balanced measuring bridge is established. For other test methods and/or requirements, the input and output of the measuring bridge should match the equipment impedance to prevent overloading of the generator and provide correct signal measurements. The 10 dB requirement may be lifted and other values may be used if reasonable accuracy is maintained within the test setup.

Phase and power splitters and other specialized RF components may be required for network analyzers and custom test fixtures. Refer to CISPR 17 regarding the specification and construction of the mismatched-impedance networks. These networks may be of the resistive type, high-frequency toroid transformer type, or a combination network type, which will yield the desired impedance and pass-band ratio. For balanced systems, a transforming network may be used. An example of this would be a matching transformer with the desired impedance and relatively flat pass band, such as 600 ohms. These devices must meet the power and frequency requirements, and their losses must be recorded and compensated for in the reported data.

8.10 Lead dress

In all test fixtures, input and output leads should always be separated. All coaxial cables and power leads shall be spaced at least 5 cm above the ground plane when it is practical. All cables should be doubly shielded and as short as practical. Cables used to connect a tracking signal generator to the input of a filter and the output of a filter to a spectrum analyzer should be of equal lengths. In addition, cables used in the calibration process when using attenuation pads should be of equal lengths.

9. Divisions of frequency ranges and recommended sensitivity

The frequency range of 100 Hz to 10 GHz shall be divided up into multiple bands to ensure that no poles or zeroes are missed in the filter-measurement process due to the resolution of the measurement. The frequency bands selected may depend on equipment specification/ability and/or specified from predetermined requirements. Calibration of each band and bandwidth used during testing must be verified and documented. If the measurement range is broken into several bands, then a minimum frequency overlap of 2% is recommended. The recommended minimum sensitivity is 6 dB below the lowest specified and demonstrated attenuation requirement. A minimum number of 400 points per scan is allowed for each bandwidth only if accuracy is demonstrated and if the resolution determined is sufficient for the specified requirements. If frequency stepping is used, the minimum number of steps shall be as specified in the test method.

The sweep rate, start frequencies, and stop frequencies will be such that the equipment will be able to perform with accuracy and have the dynamic range of the specification. The resolution bandwidth should be set to the lowest possible setting, and the sweep time extended to the maximum setting for accuracy.

Copyright © 2006 IEEE. All rights reserved.
Copyright The Institute of Electrical and Electronics Engineers, Inc.
Provided by IHS under license with IEEE
No reproduction or networking permitted without license from IHS
Not for Resale

Using swept frequency methods is encouraged. The equipment used to perform a sweep should have tracking ability to ensure that the bandwidth and amplitude scaling is maintained and artificial attenuation is not introduced by the instrument as a result of a non-tracking bandwidth. The recommended equipment to perform this test is a spectrum analyzer and tracking generator whose bandwidth is set adequately for the test frequency range specified. Use of network analyzers or similar equipment is acceptable, including calibrated receivers.

10. Required measurement methods

On occurrences, standards have been used for specifications. It should be noted that this standard is not a specification but rather a standard method of test. In order to assist in selecting appropriate tests that may be used to ensure that a given specification may be met, Table 1 is provided as a suggested guidance, but testing should not be limited to the selection menu but should be based on available information and specification. For instance, if a specification states a method (e.g., MIL-STD-220B), then the test would only qualify as a QA test and would not necessarily meet the intended specification.

Table 1—Test applicability matrix

Purpose of test	Test subclause							
	10.1	10.2	10.3	10.4	10.5	10.6	10.7	10.8
First article	X	X	X	X	X		X	
QA	X	X						
Matched-impedance and balanced networks	X		X					
Generic filter comparison	X		X					
Low-frequency performance (below 100 kHz)	X			X			X	
High-frequency performance (above 100 kHz)	X	X			X	X		
Simulation and design	X		X					X

The following test methods are required for testing the suppression capability of RFI filters in the frequency range from 100 Hz to 10 GHz. Some of the methods are based on 50-ohm matched-impedance tests found in many different standards and requirements. Revising these methods increases the efficiency for QA and estimated performance evaluations for both common- and differential-mode filter circuits with the addition of incorporating waveform quality into filter performance. The following descriptions explain test setups, rationale, applicability, and basic procedures. The RF test methods are broken into the following categories:

a) Quality assurance—No load (10 kHz to 1 GHz) (see 10.1)
b) Quality assurance—Loaded (10 kHz to 20 MHz) (see 10.2)
c) RF characteristics mismatched impedance—No load (100 kHz to 30 MHz) (see 10.3)
d) Variable source impedance attenuation measurement (100 Hz to 100 kHz) (see 10.4)
e) Attenuation measurement (100 kHz to 30 MHz) (see 10.5)
f) Aperture leak test by electric fields (1 GHz to 10 GHz) (see 10.6)
g) Voltage drop and waveform quality test (linear/nonlinear loading) (see 10.7)

Copyright © 2006 IEEE. All rights reserved.

Copyright The Institute of Electrical and Electronics Engineers, Inc.
Provided by IHS under license with IEEE
No reproduction or networking permitted without license from IHS
Not for Resale

h) S-parameter measurement (100 Hz to 30 MHz) (see 10.8)

10.1 Quality assurance testing—No load (10 kHz to 1 GHz)

10.1.1 Purpose

The no-load 50-ohm matched-impedance method will be used for QA filter testing to verify the insertion loss characteristics from 10 kHz to 1 GHz under 50-ohm impedance conditions. The purpose of this test is to determine component malfunctions or assembly error. This is extendable in frequency range, if so desired. This test uses typical 50-ohm impedance methods for common-mode measurements with the exception of the differential mode where unbalanced-to-balanced networks may be used. For differential-mode measurements, Figure 4 illustrates the typical approach.

10.1.2 Rationale

To ensure that the workmanship and the specific components of a production filter will meet the same specifications from the first article design, a QA test is needed. This test may be used as a production test once the first article sample has met its performance requirements. Samples received from the field may have this test performed and the results compared against factory data to determine the integrity of the filter.

10.1.3 Materials/equipment

The recommended equipment to perform this test is a spectrum analyzer and a tracking generator set whose frequency coverage extends from 10 kHz to 1 GHz. The use of network analyzers or similar equipment is acceptable including calibrated receivers. An RF test fixture constructed for the filter under test is also needed. Materials/equipment include the following:

a) Spectrum analyzer (operating in the specified frequency band)

b) Tracking generator (operating in the specified frequency band)

c) Variable attenuator up to 100 dB

d) Two 10 dB pads

e) Two each unbalanced-to-balanced networks (either resistor or transformer or hybrid configuration may be used)

10.1.4 Test setup/circuits

Figure 4 shows the typical test setup for a common-mode filter to measure common-mode insertion loss. The test setup is generic in nature, but caution and care are required to ensure that there are no undesired ground return paths or RF leakage in the RF test fixture during the test.

Figure 5 shows the typical test setup for a common/differential (mixed mode) mode two-line filter to measure common-mode insertion loss. The test setup is generic in nature, but caution and care are required to ensure that there are no unnecessary ground return paths or RF leakage in the RF test fixture during the test.

Figure 6 shows the typical test setup for a common/differential (mixed mode) mode two-line filter to measure differential-mode insertion loss. The test setup is generic in nature, but caution and care are required to ensure that there are no unnecessary ground return paths or RF leakage in the RF test fixture during the test.

Copyright © 2006 IEEE. All rights reserved.
Copyright The Institute of Electrical and Electronics Engineers, Inc.
Provided by IHS under license with IEEE
No reproduction or networking permitted without license from IHS Not for Resale

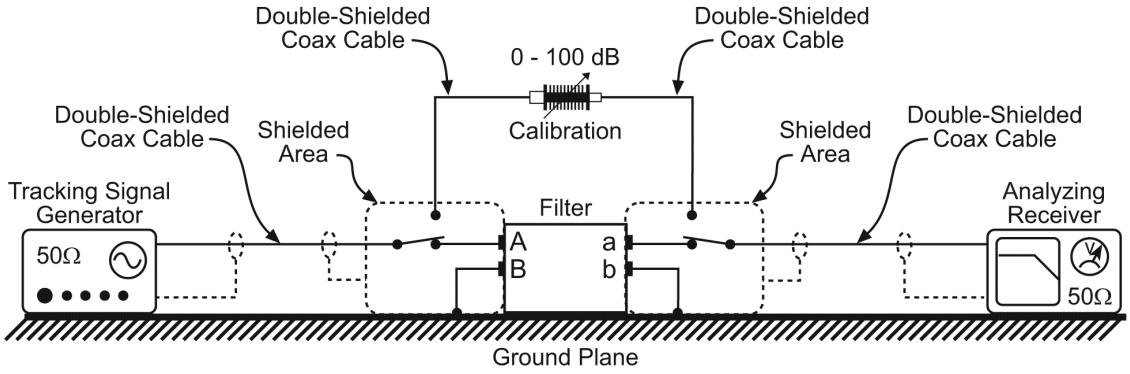

Figure 4—Common-mode no-load test setup (common-mode filter)

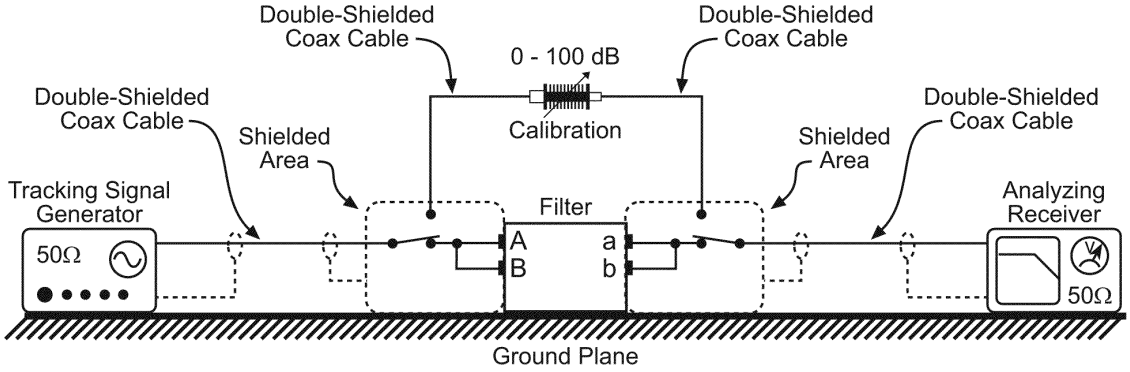

Figure 5—Common-mode no-load test setup (differential/common-mode filter)

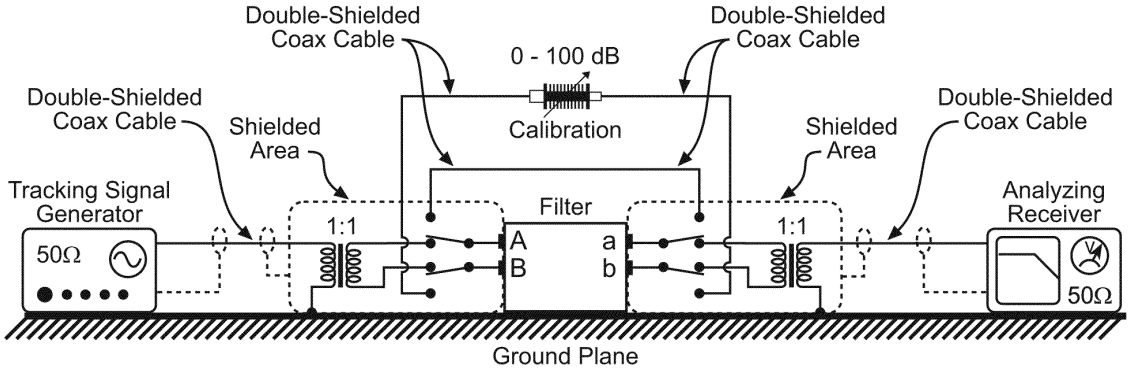

Figure 6—Differential-mode no-load test setup (differential/common-mode filter) 10 kHz to 30 MHz

Copyright © 2006 IEEE. All rights reserved.

Copyright The Institute of Electrical and Electronics Engineers, Inc.
Provided by IHS under license with IEEE
No reproduction or networking permitted without license from IHS
Not for Resale

10.1.5 Test procedure

The following test procedure shall be followed:

a) It is recommended that sweeps be performed and attenuation curves made. The equipment used to perform this sweep should have tracking ability to ensure that the bandwidth and amplitude scaling is maintained and artificial attenuation is not made by the instrument as a result of a non-tracking bandwidth.

b) Set up the equipment as shown in Figure 4 and Figure 5 for common-mode tests and/or Figure 6 for differential-mode tests.

c) Allow a 30 min warm-up of any equipment to be used to ensure that stability has been reached. Additionally, the minimum warm-up time should be the maximum warm-up time of any given instrument used in the test unless otherwise specified.

d) The frequency range shall in general be broken down into different bands, if the required frequency accuracy demands this approach. This is because a single sweep will probably not permit sufficient resolution over the entire frequency band, and performance details such as resonances may not be detected. The actual bands may be specified or chosen on the measurement equipment such that its ability to demonstrate calibrated readings and sufficient number of points is recorded during the sweep. A minimum number of 400 points per scan is allowed if the bandwidth and accuracy is demonstrated. Frequency stepping methods using 20 or more steps per octave may be used as an alterative method.

e) Verify the dynamic range of test equipment, accessories, and test fixture. This may be done by performing a frequency sweep over the desired test band with the test fixture RF connectors connected with the filter out of the circuit.

f) The sweep rate, start frequencies, and stop frequencies will be such that the equipment will be able to perform with accuracy and have the dynamic range of the specification. The resolution bandwidth should be set to the lowest possible setting, and the sweep time extended to the maximum setting for accuracy that demonstrates calibrated measurements. Perform the sweep.

g) Record the frequency sweep.

h) Repeat the sweep with a calibrated attenuation pad with the desired decibel level inserted between the isolation attenuator pads. Record the attenuation curve.

i) Once the instruments have been set up to record the scaled attenuation reference and the record has been made, then these data should be stored.

j) Install the filter in the test fixture and connect the cables to the isolation attenuator pads. A coaxial switch may be used for this test to switch between the scaling attenuator and the filter test fixture.

k) If the filter is an asymmetrical design, measure the filter in both an A-a and a-A configuration.

l) Repeat Steps b) through i) for each line present in the filter.

10.2 Quality assurance test—Loaded (10 kHz to 20 MHz)

10.2.1 Purpose

The purpose of this test is to measure basic performance of electrically independent filters under load to verify that the inductors are not operating in saturation during operation of full-rated current. The basic test frequency range is 10 kHz to 20 MHz, and the test is performed with direct current passing through the filter that is equal to the peak alternating current that would pass through the filter at its maximum rms current rating, assuming sinusoidal current. This test uses existing methods that use standard buffer networks adapted for extended range performance and is used strictly for QA/QC activities and not as a performance indicator.

Copyright © 2006 IEEE. All rights reserved.
Copyright The Institute of Electrical and Electronics Engineers, Inc.
Provided by IHS under license with IEEE
No reproduction or networking permitted without license from IHS Not for Resale

10.2.2 Rationale

The test method may be used in production filter testing to obtain a relative insertion loss measurement of the filter when operated under load conditions. Inductors that saturate under rated load conditions can impact the performance of filters, particularly near the cutoff frequency of the filter. Samples received from the field may have this test performed and the results compared against factory data to determine the integrity of the filter.

10.2.3 Materials/equipment

The recommended equipment to perform this test is a spectrum analyzer and tracking generator set whose bandwidth is adequate for the test from 10 kHz to 20 MHz. The use of network analyzers or similar equipment is acceptable. Materials/equipment include the following:

a) RF test fixture constructed for the filter under test

b) Spectrum analyzer (operating in the specified frequency band)

c) Tracking generator (operating in the specified frequency band)

d) Buffer networks of designed frequency range

e) 50-ohm power signal splitter and other necessary equipment and adaptors

f) Variable attenuation up to 100 dB

g) Two 10 dB pads

h) Direct current source

10.2.4 Test setup/circuits

Figure 7 illustrates the basic test setup with the following exception. If the filter has an asymmetrical design, the filter shall be measured in both an A-a and a-A configuration. Figure 7 is applied only for filters where the paths are electrically independent. Refer to Figure 7 for where the electrical paths are not independent of each other.

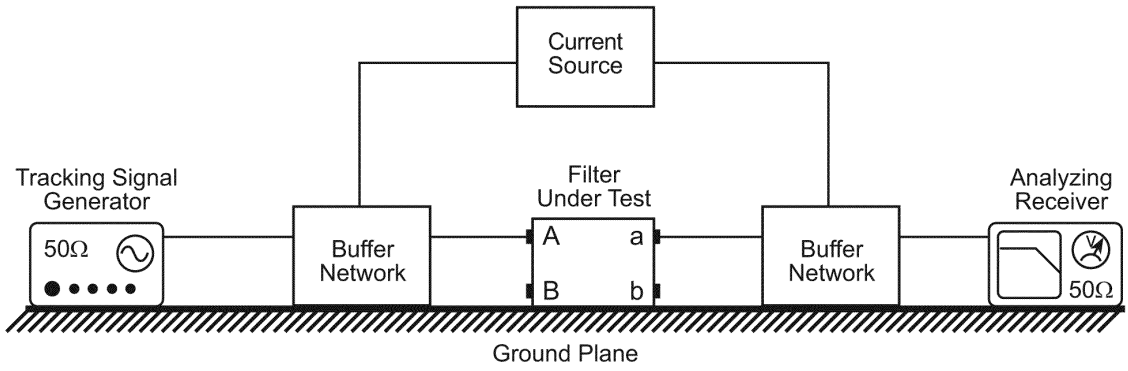

Figure 7—Common-mode full-load buffer network setup

Copyright © 2006 IEEE. All rights reserved.

Copyright The Institute of Electrical and Electronics Engineers, Inc.
Provided by IHS under license with IEEE
No reproduction or networking permitted without license from IHS
Not for Resale

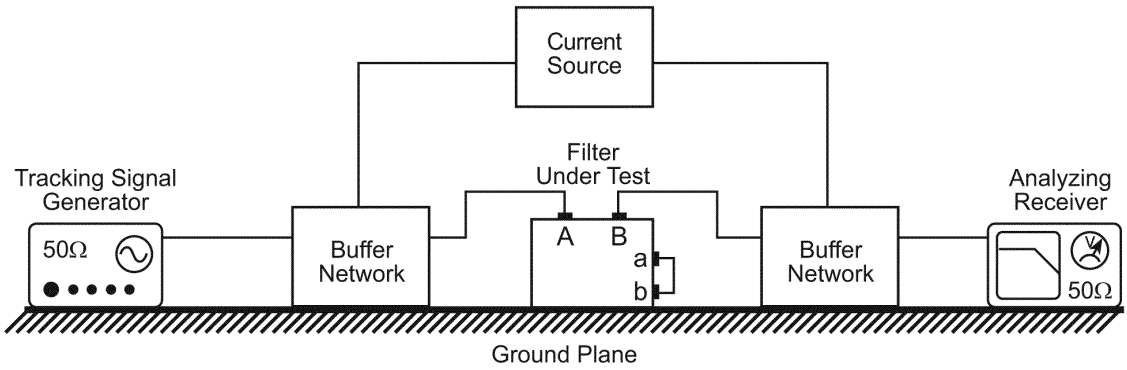

Figure 8—Common/differential-mode full-load buffer network setup

10.2.5 Test procedure

The following test procedure shall be followed:

a) It is recommended that sweeps be performed and attenuation curves made. The equipment used to perform this sweep should have tracking ability to ensure that the bandwidth and amplitude scaling is maintained and artificial attenuation is not introduced by the instrument as a result of a non-tracking bandwidth.

b) Set up the equipment as shown in Figure 7 for common-mode filters and/or adapt accordingly for differential-mode tests.

c) Select the proper buffer network for the desired frequency range of test.

d) Allow at least a 30 min warm up of any equipment to be used in the test setup to ensure that thermal stability has been reached. Additionally, the minimum warm-up time for the whole test setup should not be less than the piece of equipment with the longest warm-up time.

e) The frequency range shall in general be broken down into different bands, as a single sweep will probably not permit sufficient resolution over the entire frequency band, and performance details such as resonances may not be detected. The actual bands may be specified or chosen on the measurement equipment such that its ability to demonstrate calibrated readings and sufficient number of points is recorded during the sweep. A minimum number of 400 points per scan is allowed if the bandwidth and accuracy are demonstrated. Frequency-stepping methods using 20 or more steps per octave may be used as an alterative method.

f) Adjust the direct current source to provide the dc rating value or equivalent ac rms rating of the filter under test.

g) Verify the dynamic range of test equipment, accessories, and test fixture. This may be done by performing a frequency sweep over the desired test band with the test fixture RF connectors connected with the filter out of the circuit. Record the attenuation curve.

h) Then, perform the same sweep with a calibrated attenuation pad with the desired decibel level inserted between the isolation attenuator pads. Record the attenuation curve.

i) Once the instruments have been set up to record the scaled attenuation reference and the record has been made, then these data should be stored.

j) Install the filter in the test fixture and connect the cables to the isolation attenuator pads. A coaxial switch may be used for this test to switch between the scaling attenuator and the filter test fixture.

k) The sweep rate, start frequencies, and stop frequencies will be such that the equipment will be able to perform with accuracy and have the dynamic range of the specification. The resolution bandwidth should be set to the lowest possible setting and the sweep time extended to the maximum setting for accuracy. Perform the sweep.

Copyright © 2006 IEEE. All rights reserved.
Copyright The Institute of Electrical and Electronics Engineers, Inc.
Provided by IHS under license with IEEE
No reproduction or networking permitted without license from IHS
Not for Resale

l) If the filter is an asymmetrical design, measure the filter in both an A-a and a-A configuration. If the filter has more than one circuit, measure each circuit separately.

m) Repeat Steps b) through l) for each line circuit present in the filter.

10.3 RF characteristic test, mismatched impedance—No load (100 kHz to 30 MHz)

10.3.1 Purpose

The no-load mismatched-impedance method should be used for model verification measurement to determine the insertion loss characteristics from 100 kHz to 30 MHz under specified mismatched-impedance conditions. The purpose of this test is to predict filter performance in actual filter design stages.

10.3.2 Rationale

Often, test setups are not readily available or practical to perform actual filter performance testing using actual load and source impedances for first article design work. The mismatched-impedance method allows for a wide range of impedances to be used to help in verification of the first article design. This test may be used as a production test once the first article sample has met all other insertion loss, test requirements, and specifications.

10.3.3 Materials/equipment

The recommended equipment to perform this test is a spectrum analyzer and tracking generator set that can cover the range from 100 kHz to 30 MHz. The use of network analyzers or similar equipment is acceptable. Materials/equipment include the following:

a) RF test fixture constructed for the filter under test

b) Spectrum analyzer (operating in the specified frequency band)

c) Tracking generator (operating in the specified frequency band)

d) Variable attenuation up to 100 dB

e) Two 10 dB pads

f) Two impedance-transforming networks of the specified impedances (either resistor or transformer or hybrid configuration may be used)

g) A short double-shielded coaxial cable is to be used in place of the two coaxial cables connecting the calibration pad to the matching network between the tracking signal generator and filter, and between the filter and analyzing receiver.

10.3.4 Test setup/circuits

Figure 9 shows the typical test setup for a common-mode filter to measure common-mode insertion loss. The test setup shown is generic in nature and shows in this example a mismatch test for 0.1 ohms input and 100 ohms output. The transformer turns ratio should be selected for the desired impedance levels. Care is required during this test to ensure that unnecessary ground return paths or RF leakage in the RF test fixture exist during the test.

NOTE—If A and B are electrically independent, test A and then B.

Figure 10 shows the typical test setup for a differential-mode filter to measure common-mode insertion loss. The test setup is generic in nature, but caution and care are required to ensure that there are no unnecessary ground return paths or RF leakage in the RF test fixture during the test.

Copyright © 2006 IEEE. All rights reserved.

Copyright The Institute of Electrical and Electronics Engineers, Inc.
Provided by IHS under license with IEEE
No reproduction or networking permitted without license from IHS
Not for Resale

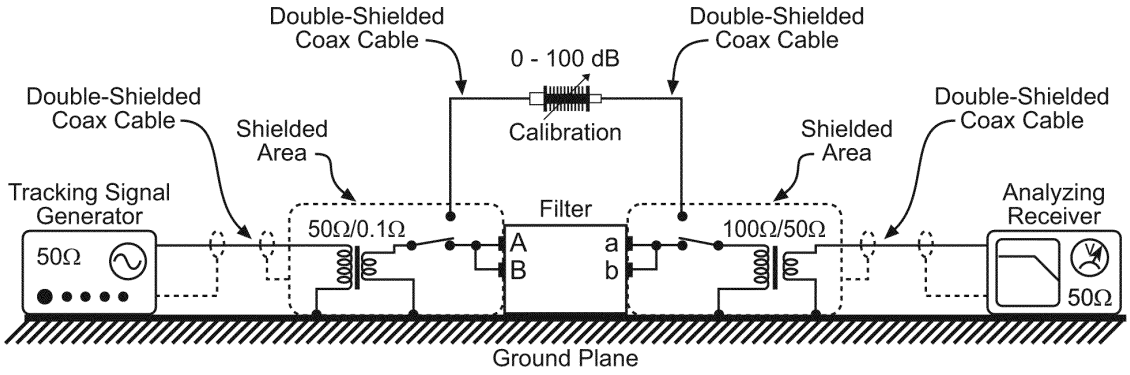

Figure 9—Common-mode mismatched-impedance generic test setup

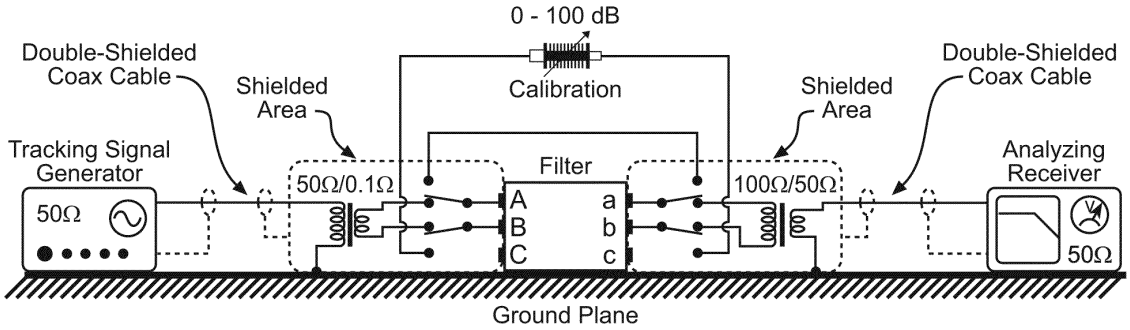

Figure 10—Differential-mode mismatched-impedance generic test setup

10.3.5 Test procedure

The following test procedure shall be followed:

a) It is recommended that sweeps be performed and attenuation curves made. The equipment used to perform this sweep should have tracking ability to ensure that the bandwidth and amplitude scaling is maintained and artificial attenuation is not introduced by the instrument as a result of a non-tracking bandwidth. The recommended equipment to perform this test is a spectrum analyzer and tracking generator that can cover the range of 100 kHz to 30 MHz. The use of network analyzers or similar equipment is acceptable, including calibrated receivers.

b) Set up the equipment as shown in Figure 9 for common-mode test and/or Figure 10 for differential-mode tests.

c) Allow at least a 30 min warm up of any equipment to be used in the test setup to ensure that thermal stability has been reached. Additionally, the minimum warm-up time for the whole test setup should not be less than the piece of equipment with the longest warm-up time.

d) The frequency range shall in general be broken down into different bands, because a single sweep will probably not permit sufficient resolution over the entire frequency band, and performance details such as resonances may not be detected. The actual bands may be specified or chosen on the measurement equipment such that its ability to demonstrate calibrated readings and sufficient number of points is recorded during the sweep. A minimum number of 400 points per scan is allowed if the bandwidth and accuracy are demonstrated. Frequency-stepping methods using 20 or more steps per octave may be used as an alterative method.

Copyright © 2006 IEEE. All rights reserved.
Copyright The Institute of Electrical and Electronics Engineers, Inc.
Provided by IHS under license with IEEE
No reproduction or networking permitted without license from IHS
Not for Resale

e) Verify the dynamic range of test equipment, accessories, and test fixture. This may be done by performing a frequency sweep over the desired test band with the test fixture RF connectors connected with the filter out of the circuit. This is done in two steps. The first step is to insert a coaxial cable between mismatched-impedance transformers. This should result in approximately a 50 dB insertion loss. The second step is to insert the calibrated attenuation pad. This pad should be selected based upon the dynamic range of the filter under test.

NOTE—Due to the high insertion loss of the test setup, high-attenuation filters greater than 60 dB may not be practical to be measured without additional test equipment such as pre- and post-amplifiers.

f) The sweep rate, start frequencies, and stop frequencies will be such that the equipment will be able to perform with accuracy and have the dynamic range of the specification. The resolution bandwidth should be set to the lowest possible setting, and the sweep time extended to the maximum setting for accuracy that demonstrates calibrated measurements. Perform the sweep.

g) Record the attenuation curve.

h) Repeat the sweep with a calibrated attenuation pad with the desired decibel level inserted between the isolation attenuator pads. Record the attenuation curve.

i) Once the instruments have been set up to record the scaled attenuation reference and the record made, then these data should be stored.

j) Install the filter in the test fixture and connect the cables to the isolation attenuator pads. A coaxial switch may be used for this test to switch between the scaling attenuator and the filter test fixture.

k) If the filter is an asymmetrical design, measure the filter in both an A-a and a-A configuration. If the filter has more than one signal path, measure each circuit separately.

l) Repeat Steps b) through j) if the filter is a common/differential (mixed-mode) mode filter.

m) Repeat the Steps b) through j) for the inverse mismatched-impedance system by interchanging the source and load transformer networks.

10.4 Variable source impedance attenuation measurement (100 Hz to 100 kHz)

10.4.1 Purpose

The current injection method will be used, unless otherwise specified, over the frequency range of 100 Hz to 100 kHz to measure the attenuation of the powered filter under a realistic, non 50-ohm impedance. The current injection method is used to demonstrate the actual attenuation of the filter under different load conditions for linear and nonlinear loading. The current shall be injected on the load side for symmetrical filters and then on the source side during test of non-symmetrical filters. In this method, an additional series line reactance will be used in the test over the frequency range for worst-case design testing and verification.

10.4.2 Rationale

The bulk current injection method models filter performance when power-line filters are used to create an electromagnetic ally quiet environment within a shielded enclosure (Faraday cage). This method requires that a shielded room to be used to isolate the filter load and source. The traditional 10 μF capacitor used in many military standards is not recommended, because most source impedances do not have capacitive reactive characteristics. Instead, a variable line reactance will be inserted in the basic RF current injector method of testing from 100 Hz to 100 kHz. The line reactance should be based upon a volt-ampere dissipation percentage computed from the tested load rating with the reactor out of the circuit. When a specification is not provided, it is recommended that 3% and 9% reactors be used.

10.4.3 Test setup/circuits

The test setup for common-mode tests is shown in Figure 11, and that for differential tests is shown in Figure 12.

Copyright © 2006 IEEE. All rights reserved.

Copyright The Institute of Electrical and Electronics Engineers, Inc.
Provided by IHS under license with IEEE
No reproduction or networking permitted without license from IHS
Not for Resale

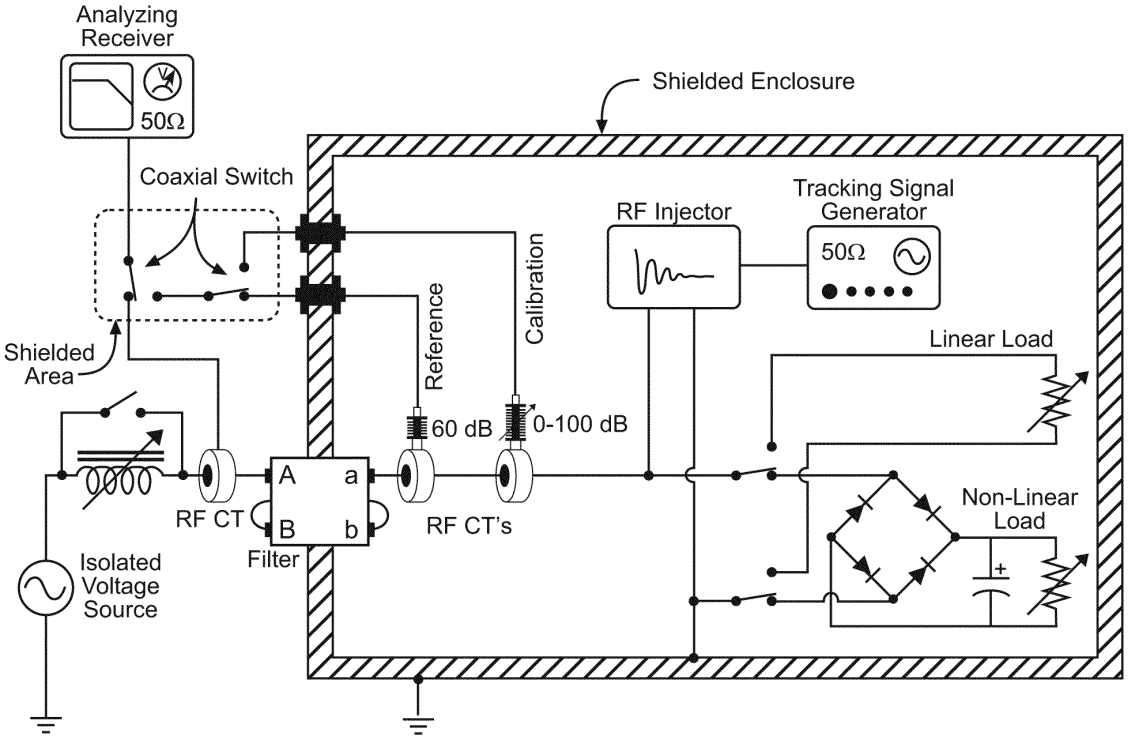

Figure 11—Typical common-mode test setup—100 Hz to 100 kHz

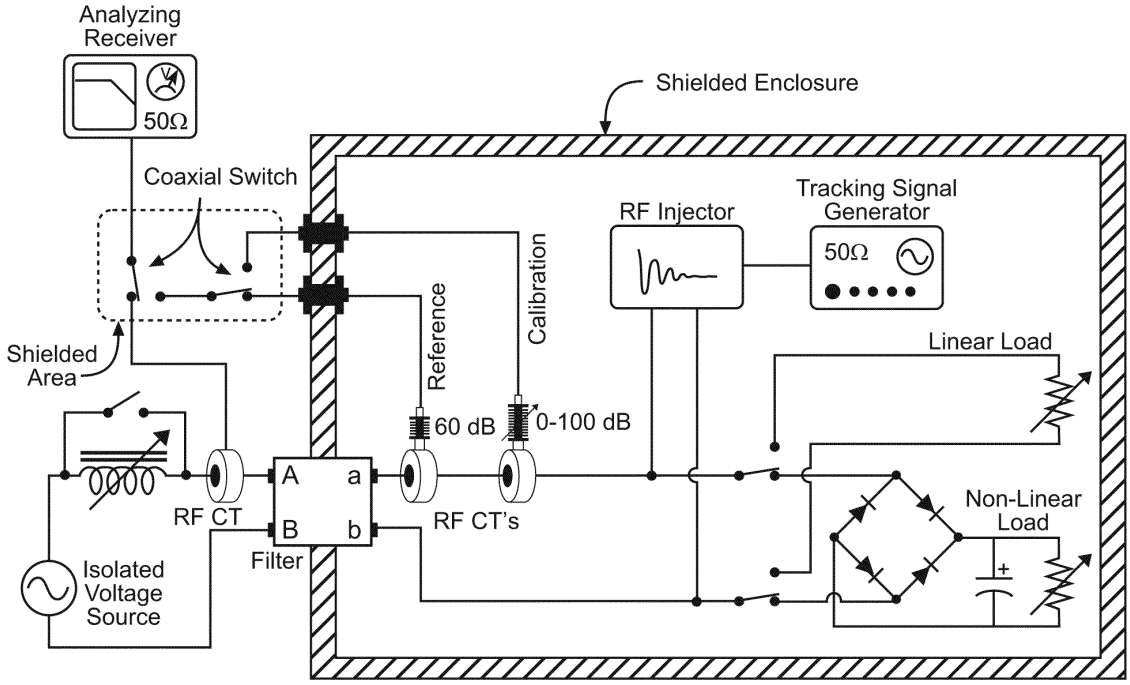

Figure 12—Typical differential-mode test setup—100 Hz to 100 kHz

Copyright © 2006 IEEE. All rights reserved.
Copyright The Institute of Electrical and Electronics Engineers, Inc.
Provided by IHS under license with IEEE
No reproduction or networking permitted without license from IHS
Not for Resale

10.4.4 Materials/equipment

The recommended equipment to perform this test is a shielded enclosure or Faraday box that exhibits enough attenuation to ensure RF leakage is not at a level to interfere with the intended measured dynamic range of performance of the filter. Materials/equipment include the following:

a) Spectrum analyzer (operating in the specified frequency band)
b) Tracking signal generator (operating in the specified frequency band)
c) RF amplifier or amplifiers (operating in the specified frequency band)
d) RF current injector or amplifier if using current injection probe
e) Standardized ac power source
f) 100 dB calibration pad and other pads and attenuators of different sizes
g) RF current probes
h) Variable line reactors, or fixed 3% and 9% reactors may used in the absence of a specification
i) Shielded enclosures or Faraday boxes
j) RF test fixture suitable for testing 100 dB facility filters
k) Linear and nonlinear load

10.4.5 Test procedure

The following test procedure should be followed:

a) It is recommended that sweeps be performed and attenuation curves made. The equipment used to perform this sweep should have tracking ability to ensure that the bandwidth and amplitude scaling are maintained and artificial attenuation is not introduced by the instrument as a result of a non-tracking bandwidth. The recommended equipment to perform this test is a spectrum analyzer and tracking generator set that can cover the frequency range of 100 Hz to 100 kHz. Use of network analyzers or similar equipment is acceptable including calibrated receivers.
b) Set up the equipment as shown in Figure 11 for common-mode test and/or Figure 12 for differential-mode tests.
c) The RF current injector is placed on the load side during one set of measurements. The distance of the face of the current probe from the filter during measurement shall be between a range of 5 cm and 15 cm. A control spacer made of a fluorinated polymer-based material (a fluorinated polymer-based material is a thermo-plastic material with good electrical insulating properties and chemical and heat resistance) or another material with similar properties is recommended. If bulk current injection is used, then refer to the manufacturer's recommendations concerning the acceptable physical placement of the RF current injection probe.
d) The RF current injector will be placed on the source side. This requires that the filter be mounted from the outside and then from the inside of the shielded room. The test equipment will be arranged to accommodate this change.
e) Set up the load impedance as required for the series tests as specified for the linear load and nonlinear load tests.
f) Allow at least a 30 min warm up of any equipment to be used in the test setup to ensure that thermal stability has been reached. Additionally, the minimum warm-up time for the whole test setup should not be less than the piece of equipment with the longest warm-up time.
g) Verify the dynamic range of test equipment, accessories, and test fixture. This may be done by performing a frequency sweep over the desired test band with the test fixture RF connectors connected with the in-circuit filter by using an additional RF CT with calibrated attenuation pads to verify that the necessary dynamic range has been established. Raise the output power of the RF amplifier until the desired reference is above the noise floor of the analyzer. Perform the measurement sweep with the RF CT on the source side of the filter switched into the analyzer.

Copyright © 2006 IEEE. All rights reserved.

Copyright The Institute of Electrical and Electronics Engineers, Inc.
Provided by IHS under license with IEEE
No reproduction or networking permitted without license from IHS
Not for Resale

h) The sweep rate, start frequencies, and stop frequencies will be such that the equipment will be able to perform with accuracy and have the dynamic range of the specification. The resolution bandwidth should be set to the lowest possible setting and the sweep time extended to the maximum setting for accuracy that demonstrates calibrated measurements.

i) The frequency range shall in general be broken down into different bands, because a single sweep will probably not permit sufficient resolution over the entire frequency band, and performance details such as resonances may not be detected. The actual bands may be specified or chosen on the measurement equipment such that its ability to demonstrate calibrated readings and sufficient number of points is recorded during the sweep. A minimum number of 400 points per scan is allowed if the bandwidth and accuracy are demonstrated. Frequency-stepping methods using 20 or more steps per octave may be used as an alterative method.

j) Once the instruments have been set up to record the scaled attenuation reference and the record is made, then these data should be stored.

k) If the filter is an asymmetrical design, measure the filter in both an A-a and a-A configuration. If the filter has more than one signal path, measure each circuit separately.

l) Repeat Steps b) through k) if the filter is a common/differential (mixed-mode) mode filter.

m) Record the input and output signals. The filter shall meet the specifications for the RF current injection method.

10.5 Attenuation measurement (100 kHz to 30 MHz)

10.5.1 Purpose

The current probe injection method will be used, unless otherwise specified, over the frequency range of 100 kHz to 30 MHz to measure the attenuation of the powered filter under realistic, non 50-ohm impedance. The current injection method is used to demonstrate the actual attenuation of the filter under different load conditions for linear and nonlinear loading. The current shall be injected on the load side and the source side during the test.

10.5.2 Rationale

The bulk current injection method models filter performance when they are used to create an electromagnetically quiet environment within a shielded enclosure (Faraday cage). This method requires that a shielded room to be used to isolate the filter load and source. The use of 50 μH LISNs shall be used as the method establishing source impedance at 100 kHz and above.

10.5.3 Test setup/circuits

The following test setup for common-mode tests is shown in Figure 13 and that for differential tests is shown in Figure 14.

Copyright © 2006 IEEE. All rights reserved.
Copyright The Institute of Electrical and Electronics Engineers, Inc.
Provided by IHS under license with IEEE
No reproduction or networking permitted without license from IHS Not for Resale

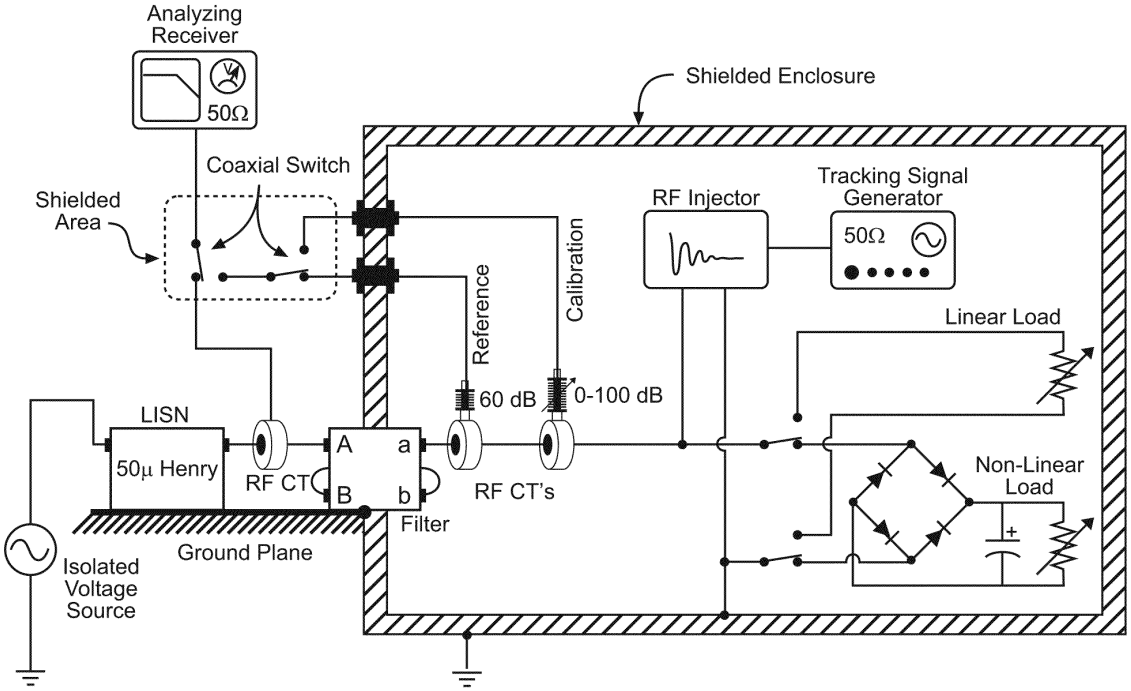

Note: LISN's and Ground Plane are attached to the Shielded Enclosure.

Figure 13—Typical common-mode test setup—100 kHz to 30 MHz

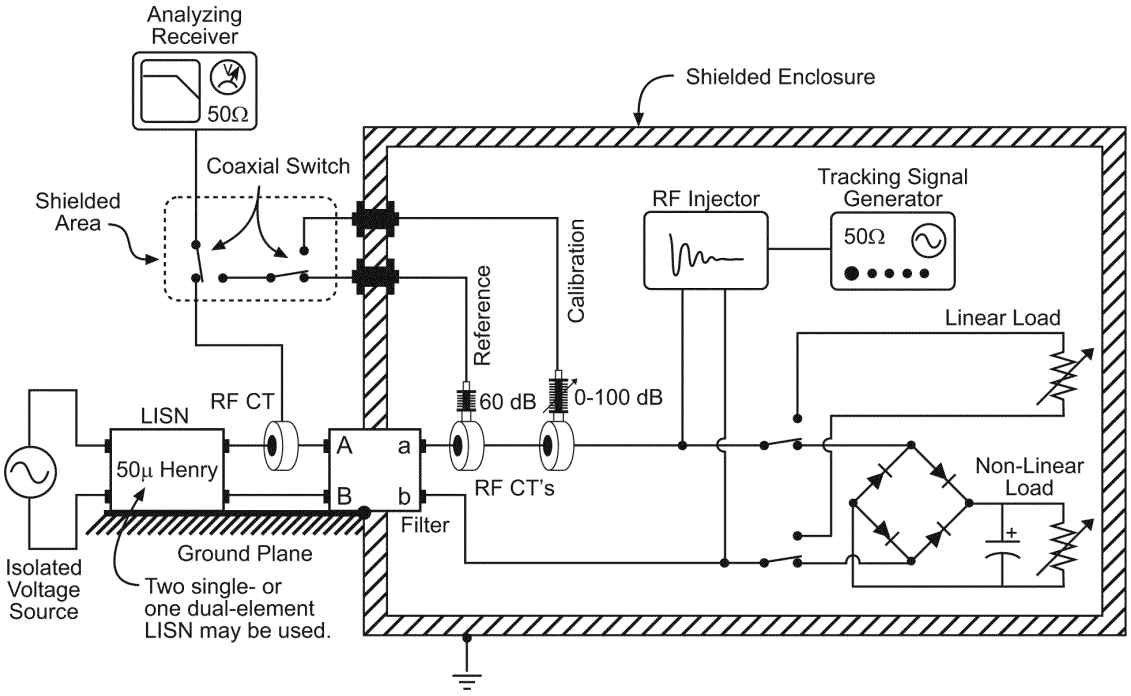

Note: LISN's and Ground Plane are attached to the Shielded Enclosure.

Figure 14—Typical differential-mode test setup—100 kHz to 30 MHz

Copyright © 2006 IEEE. All rights reserved.

Copyright The Institute of Electrical and Electronics Engineers, Inc.
Provided by IHS under license with IEEE
No reproduction or networking permitted without license from IHS
Not for Resale

10.5.4 Materials/equipment

The recommended equipment to perform this test is a shielded enclosure or Faraday box that exhibits enough attenuation to ensure RF leakage is not at a level to interfere with the intended measured dynamic range of performance of the filter. Materials/equipment include the following:

a) Spectrum analyzer or similar equipment with 100 dB dynamic range
b) RF tracking generator
c) RF amplifier or amplifiers
d) Standardized ac power source
e) Isolation transformer
f) 50 μH LISN(s)

NOTE—Two LISNs bonded on the same ground plane may be used or a multiple-input line LISN may be used with the unused RF ports terminated into 50 ohms.

g) 100 dB calibration pad and other pads and attenuators of different sizes
h) RF current probes
i) Bulk current injection probe
j) Shielded enclosures or Faraday boxes
k) RF test fixture suitable for testing 100 dB facility filters
l) Linear and nonlinear load

10.5.5 Test procedure

The following test procedure shall be followed:

a) It is recommended that sweeps be performed and attenuation curves made. The equipment used to perform this sweep should have tracking ability to ensure that the bandwidth and amplitude scaling is maintained and artificial attenuation is not introduced by the instrument as a result of a non-tracking bandwidth. The recommended equipment to perform this test is a spectrum analyzer and tracking generator that can cover the frequency range of 100 kHz to 30 MHz. The use of network analyzers or similar equipment is acceptable, including calibrated receivers.
b) Set up the equipment as shown in Figure 13 for common-mode test and/or Figure 14 for differential-mode tests.
c) The RF current injector is placed on the load side during one set of measurements. The distance of the face of the current probe from the filter during measurement shall be between a range of 5 cm and 15 cm. A control spacer made of a fluorinated polymer-based material (a fluorinated polymer-based material is a thermo-plastic material with good electrical insulating properties and chemical and heat resistance) or another material with similar properties is recommended. If bulk current injection is used, then refer to the manufacturer's recommendations concerning the acceptable physical placement of the RF current injection probe.
d) The RF current injector will be placed on the source side. This requires that the filter be mounted from the outside and then from the inside of the shielded room. The test equipment will be arranged to accommodate this change.
e) Set up the load impedance as required for the series tests as specified for the linear load and nonlinear load tests.
f) Allow at least a 30 min warm up of any equipment to be used in the test setup to ensure that thermal stability has been reached. Additionally, the minimum warm-up time for the whole test setup should not be less than the piece of equipment with the longest warm-up time.
g) Verify the dynamic range of test equipment, accessories, and test fixture. This may be done by performing a frequency sweep over the desired test band with the test fixture with the filter in the circuit. This is accomplished by using an additional RF CT with calibrated attenuation pads on the

Copyright © 2006 IEEE. All rights reserved.
Copyright The Institute of Electrical and Electronics Engineers, Inc.
Provided by IHS under license with IEEE
No reproduction or networking permitted without license from IHS
Not for Resale

RF-source side of the filter to verify that the necessary dynamic range has been established. Raise the output power of the RF amplifier until the desired reference is above the noise floor of the analyzer. Perform the measurement sweep with the RF CT on the source side of the filter switched into the analyzer.

h) The sweep rate, start frequencies, and stop frequencies will be such that the equipment will be able to perform with accuracy and have the dynamic range of the specification. The resolution bandwidth should be set to the lowest possible setting and the sweep time extended to the maximum setting for accuracy that demonstrates calibrated measurements.

i) The frequency range shall in general be broken down into different bands, because a single sweep will probably not permit sufficient resolution over the entire frequency band, and performance details such as resonances may not be detected. The actual bands may be specified or chosen on the measurement equipment such that its ability to demonstrate calibrated readings and sufficient number of points is recorded during the sweep. A minimum number of 400 points per scan is allowed if the bandwidth and accuracy are demonstrated. Frequency stepping methods using 20 or more steps per octave may be used as an alterative method.

j) Once the instruments have been set up to record the scaled attenuation reference and the record has been made, then these data should be stored.

k) If the filter is an asymmetrical design, measure the filter in both an A-a and an a-A configuration. If the filter has more than one signal path, measure each circuit separately.

l) Repeat Steps b) through k) if the filter is a common/differential (mixed-mode) mode filter.

m) Record the input and output signals. The filter shall meet the specifications for the RF current injection method.

10.6 Aperture leak testing by electric fields (1 GHz to 10 GHz)

10.6.1 Purpose

A defect in any portion of the surface area of a sealed filter can permit passage of RF energy. This must be prevented because the integrity of the seal depends upon case construction to provide shielding. This test may detect leaks due to faulty design or manufacturing processes. The integrity of the seal may be verified in the “as received” condition or in environmental tests, such as thermal shock, physical shock, or vibration.

10.6.2 Rationale

It is not practical to demonstrate the filtering performance of power-line filters at frequencies above several hundreds of megahertz. Conductors become resonant and radiate substantial energy, making accurate attenuation measurements difficult and unlikely to be accurate. Thus, the effectiveness of the filter may best be determined by verifying the integrity of its mechanical housing.

10.6.3 Materials/equipment

The following materials/equipment are recommended to perform this test:

a) Microwave horns with transmit and receive mode

b) RF power amplifier

c) Network analyzers and/or EMI receivers

d) RF signal source

e) RF power attenuators

Copyright © 2006 IEEE. All rights reserved.

Copyright The Institute of Electrical and Electronics Engineers, Inc.
Provided by IHS under license with IEEE
No reproduction or networking permitted without license from IHS
Not for Resale

10.6.4 Test setup/circuits

Figure 15 shows the test setup using a shielded room. The filter under test is placed on the outside of the room. The transmitting horn antenna, which receives power from the power amplifier, applies an electric field to the filter. The receiving horn antenna, which delivers its signal to a network analyzer, detects the field from the filter. A load bank may be used to terminate the leads of the filter, but is not required for the test.

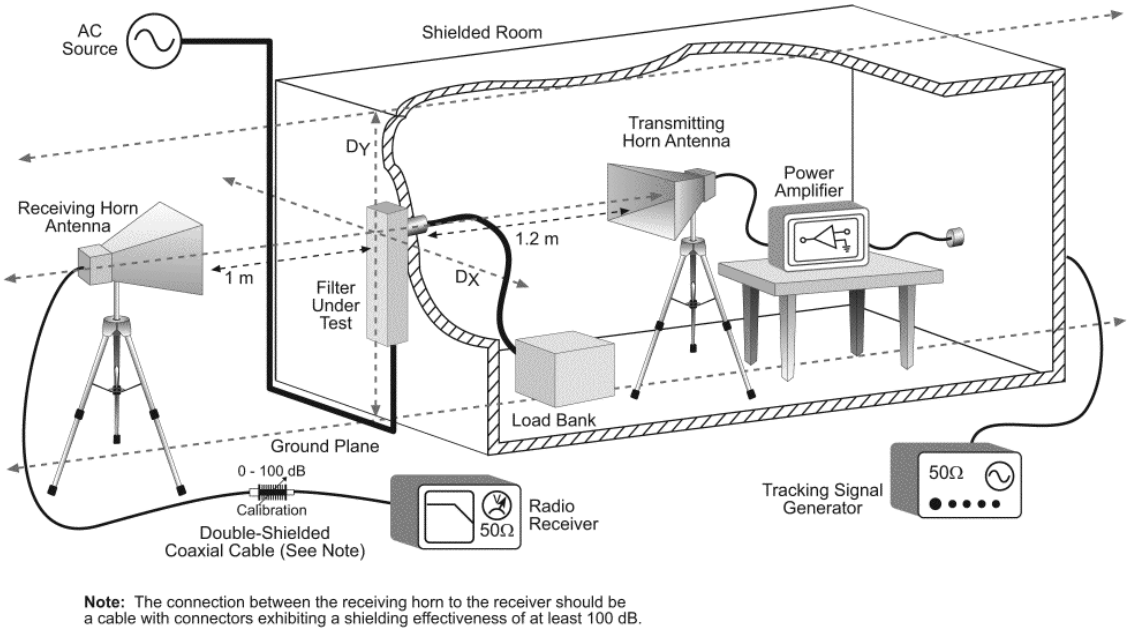

Figure 15—Test setup for electric field-based aperture test

10.6.5 1Test procedure

The following test procedures should be followed:

NOTE—This procedure should be conducted at the site where the filter is to be installed.

a) Prior to testing the filter, the antenna horns shall be calibrated outside of the shielded room. Set up the transmitting and receiving horn antennas with a variable attenuation pad between the analyzer and the receiving horn antenna with the pad set to 100 dB. Set the horns apart at a distance of 2.2 m directly in line with each other outside of the shielded room.

b) Allow at least a 30 min warm up of any equipment to be used in the test setup to ensure that thermal stability has been reached. Additionally, the minimum warm-up time for the whole test setup should not be less than the piece of equipment with the longest warm-up time.

c) With the amplifier set at minimum power, increase the power until the signal is at least 6 dB above the noise floor. This is the calibration reference for an attenuation of 100 dB.

d) Move the transmitting horn antenna to the inside of the shielded room, and locate it in the center of the room.

e) With the filter removed from the shielded room and the penetration (i.e., the holes where the filter is to be mounted) plugged using brass wool and copper tape, apply power to the transmitting horn antenna and decrease the attenuation, if necessary, until a signal is detected by the analyzer, if possible. This is done to determine the overall leakage associated with the penetration panel of the shielded enclosure where the filter is to be installed.

Copyright © 2006 IEEE. All rights reserved.
Copyright The Institute of Electrical and Electronics Engineers, Inc.
Provided by IHS under license with IEEE
No reproduction or networking permitted without license from IHS
Not for Resale

f) Record the attenuation measured at the penetration panel.

g) Install the filter under test in the penetration panel where it is to be mounted. The filter shall be installed according to the recommendations required by the filter manufacturer.

h) Use the analyzer to measure the attenuation loss in the desired frequency range between 1 GHz and 10 GHz with the horn antennas directly in line with each other.

NOTE—The range may be extended to frequencies greater than 10 GHz if desired.

i) Move both horn antennas to a position 0.5 m to the left of the original position and repeat Step h).

j) Move both horn antennas to a position 0.5 m to the right of the original position and repeat Step h).

k) Move both horn antennas to a position 0.5 m above the original position and repeat Step h).

l) Move both horn antennas to a position 0.5 m below the original position and repeat Step h).

m) Repeat Steps h) through l) to obtain the attenuation loss at the five horn locations with respect to the center of the filter feed-through. If the mounted location of the filter precludes making measurements in all of the locations, make as many of the measurements as possible and show in the test log or data sheet which positions could not be tested.

n) All five attenuation measurements must be less than the 100 dB reference recorded in Step b).

10.7 Voltage drop and waveform quality test (linear/nonlinear loading)

10.7.1 Purpose

The waveform quality test ensures that the filter will not supply unacceptable power to the load and to verify that the filter does not offer any power-frequency resistance under full-rated current of a linear and/or nonlinear load that might result in the overheating of the filter or in producing unacceptable voltage levels supplied to the loads.

10.7.2 Rationale

Filters traditionally are measured for voltage drop using only a purely resistive load. Nonlinear loads, which electronic equipment often exhibit, with their associated high peak current, can cause magnetic saturation of inductors in filters. Also, the impedance of the filters at the harmonic frequencies present in the nonsinusoidal current may cause unacceptable voltage distortion on the load side of the filter.

10.7.3 Materials/equipment

The following materials/equipment are recommended to perform this test:

a) Oscilloscope

b) Power analyzer

c) Low-frequency CTs

d) Voltage isolation probe

e) Linear load

f) Nonlinear load

10.7.4 Test setup/circuit

Figure 16 shows the connection diagram for the waveform quality test using a linear and nonlinear load.

Copyright © 2006 IEEE. All rights reserved.

Copyright The Institute of Electrical and Electronics Engineers, Inc.
Provided by IHS under license with IEEE
No reproduction or networking permitted without license from IHS
Not for Resale

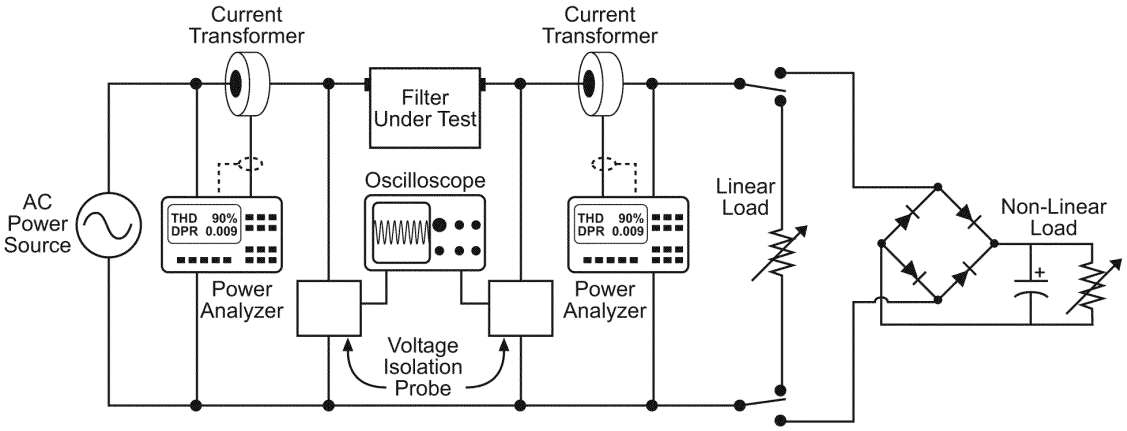

Figure 16—Waveform quality connection diagram linear/nonlinear load

10.7.5 Test procedures (voltage drop)

The filter should exhibit less than or equal to the specified voltage drop of rated ac line voltage in a unity power factor system and at maximum rated current. The linear load shall exhibit a near unity power factor in the range of 0.98 to 1.00 and shall be measured or calculated by the true power factor method and not a displaced power factor calculation or measurement. True power factor is calculated by watts/volt-ampere. The following test procedures shall be followed:

a) Verify the integrity and repeatability of the measurement setup.

b) Connect the filter under test as shown in Figure 16. Connect a linear load to the filter output according to Figure 16. Ensure that all the connections are secured.

Note—A transfer switch arrangement may be used to switch between the linear and nonlinear loads during the test.

c) Turn on the power at rated voltage and adjust the load to maximum rated current.

d) Allow at least a 30 min warm up of any equipment to be used in the test setup to ensure that thermal stability has been reached. Additionally, the minimum warm-up time for the whole test setup should not be less than the piece of equipment with the longest warm-up time.

e) Measure all the input voltages line to ground with a true rms reading voltmeter and record the voltages.

f) Measure all the output voltages line to ground with a true rms reading voltmeter and record the voltages.

g) The voltage drop is the difference between the two recorded voltages of any given phase to ground.

h) Disconnect the linear load from the filter output, and connect the nonlinear load.

i) Repeat Steps d) through g).

10.7.6 Test procedures (waveform quality)

The nonlinear load shall be a bridge rectifier capable of handling the load current. The bridge shall exhibit no more than 1.4 V dc forward drop and individual diodes shall exhibit no more than 0.7 V dc forward drop. The dc capacitor must be rated for at least 2.8 times the rms line voltage and shall have a value that produces a current crest factor of 2.2 under the filter specified full-load rms current with the filter out of the circuit. The use of bleeder resistors with the capacitor is encouraged for safety.

a) Connect the filter under test as shown in Figure 16 with the nonlinear load connected.

b) Ensure that all the connections are secured and that the resistors are connected.

Copyright © 2006 IEEE. All rights reserved.
Copyright The Institute of Electrical and Electronics Engineers, Inc.
Provided by IHS under license with IEEE
No reproduction or networking permitted without license from IHS
Not for Resale

c) Turn on the power at rated voltage and adjust the load true rms current to 25%, 50%, 75%, and 100% of the rated filter load.

d) Allow at least a 30 min warm up of any equipment to be used in the test setup to ensure that thermal stability has been reached. Additionally, the minimum warm-up time for the whole test setup should not be less than the piece of equipment with the longest warm-up time.

e) For each load level, measure all the input and output line-to-ground voltages, phase currents, and power with a true rms meter. Record the following parameters: peak voltage and phase current, true rms voltage and current, and percent THD of the voltage and current.

f) The true voltage drop is the difference between the two recorded voltages of any given phase to ground.

g) After the circuit has been energized for 30 min, measure the input and output line-to-ground voltages, phase currents, and power dissipation of the filter. Power dissipation is the difference between the two recorded wattages—input and output. The power measurements shall be made by using power measuring instruments with a minimum accuracy of at least ±0.2% of the reading.

h) Record time-domain oscillograms of the voltage and current.

10.8 S-parameter measurement (100 Hz to 30 MHz)

10.8.1 Purpose

The purpose of scattering parameters (S-parameters) measurement is to provide a set of frequency-dependant quantities that describe the filter network, which can be directly used in modeling and simulation to predict filter performance (attenuation and affects on source and load currents and voltages) under any source or load impedance. The S-parameters are measured at a particular operating point, thus analysis assumes linearity around that operating point.

Annex D provides background information on S-parameters and S-parameter measurement basics.

10.8.2 Rationale

Data from most common EMI filter performance characterization methods, such as MIL-STD-220B, are valid only under a particular source and load impedance. Accurate use of these data under conditions of different source and load impedances is usually impossible.

S-parameter characterization data, which can be obtained using a network analyzer, can be used under any source and load condition to produce accurate analysis results. It can also be used for specifying EMI filter performance. S-parameter characterization can be preformed on not only single-pole devices but also on multi-pole devices, such as a three-phase power input filter. The resulting S-parameter data can be imported directly to modern simulation tools to allow determination of expected common-mode and differential-mode responses in both time and frequency domain. S-parameters are a shared language between simulation and measurement.

10.8.3 Converting Z-parameters to S-parameters for 100 Hz to 30 kHz

The low-frequency end of S-parameter measurement equipment is usually 30 kHz. However, EMI filters may need to be characterized and/or simulated/analyzed at frequencies below 30 kHz or be simulated/analyzed in the time domain where low-frequency content is significant. Extrapolation of low-frequency S-parameter data downward in frequency may be inappropriate for these situations. In these cases, it is recommended that impedance parameters (Z-parameters) measurements be made at low frequencies and then converted to S-parameters. Z-parameter measurements are appropriate when dimensions involved with the test setup are electrically short. Z-parameter measurements can easily be made using vector voltmeters

Copyright © 2006 IEEE. All rights reserved.

Copyright The Institute of Electrical and Electronics Engineers, Inc.
Provided by IHS under license with IEEE
No reproduction or networking permitted without license from IHS
Not for Resale

with short- and open-circuit tests at the terminals of the filter under test. Thus, based on the convention shown in Figure 17 and Equation (2), Z-parameters for a 2-port network are defined as:

$$\begin{bmatrix} v_1 \\ v_2 \end{bmatrix} = \begin{bmatrix} z_{11} & z_{12} \\ z_{21} & z_{22} \end{bmatrix} \bullet \begin{bmatrix} i_1 \\ i_2 \end{bmatrix} \tag{2}$$

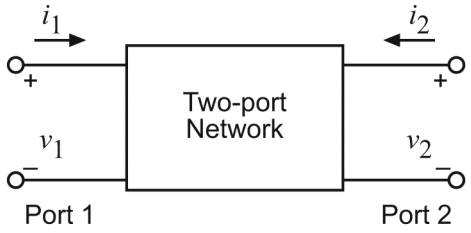

Figure 17— Two-port network representation

For an N-port network, Z-parameters are defined as show in Equation (3):

$$\begin{bmatrix} v_1 \\ v_2 \\ \vdots \\ v_n \end{bmatrix} = \begin{bmatrix} z_{11} & z_{12} & \cdots & z_{1n} \\ z_{21} & & & z_{2n} \\ \vdots & & & \vdots \\ z_{n1} & z_{n2} & \cdots & z_{nn} \end{bmatrix} \cdot \begin{bmatrix} i_1 \\ i_2 \\ \vdots \\ i_n \end{bmatrix} \tag{3}$$

Z-parameter measurements can easily be made using vector voltmeters with short- and open-circuit tests at the terminals of the filter under test. An example for a 2-port network (1-pole filter) is shown in Equation (4):

$$z_{11} = \left.\frac{v_1}{i_1}\right|_{i_2 = 0} \quad \text{and} \quad z_{12} = \left.\frac{v_1}{i_2}\right|_{i_1 = 0} \tag{4}$$

In general, Z-parameters convert to S-parameters as shown in Equation (5):

$$[\mathbf{S}] = ([\mathbf{Z}] - Z_0 \cdot [\mathbf{I}]) \cdot ([\mathbf{Z}] + Z_0 \cdot [\mathbf{I}])^{-1} \tag{5}$$

where

[S] = S-parameter matrix
[**Z**] = Z-parameter matrix
[**I**] = Identity matrix
Z_0 = Impedance base for S-parameter data

For a 2-port network, Z-parameters convert to S-parameters as shown in Equation (6), Equation (7), Equation (8), and Equation (9):

$$S_{11} = \frac{(z'_{11} - 1) \cdot (z'_{22} + 1) - z'_{12} z'_{21}}{(z'_{11} + 1) \cdot (z'_{22} + 1) - z'_{12} z'_{21}} \tag{6}$$

Copyright © 2006 IEEE. All rights reserved.
Copyright The Institute of Electrical and Electronics Engineers, Inc.
Provided by IHS under license with IEEE
No reproduction or networking permitted without license from IHS
Not for Resale

$$S_{12} = \frac{2z'_{12}}{(z'_{11}+1)\cdot(z'_{22}+1) - z'_{12}z'_{21}} \tag{7}$$

$$S_{21} = \frac{2z'_{21}}{(z'_{11}+1)\cdot(z'_{22}+1) - z'_{12}z'_{21}} \tag{8}$$

$$S_{22} = \frac{(z'_{11}+1)\cdot(z'_{22}-1) - z'_{12}z'_{21}}{(z'_{11}+1)\cdot(z'_{22}+1) - z'_{12}z'_{21}} \tag{9}$$

where

$$z'_{11} = \frac{z_{11}}{Z_0},\ z'_{12} = \frac{z_{12}}{Z_0},\ z'_{21} = \frac{z_{21}}{Z_0},\ \text{and}\ z'_{22} = \frac{z_{22}}{Z_0}$$

Refer to Annex G for further information regarding the impedance domains and filter worst-case characteristics.

10.8.4 Test setup/circuit

Figure 18 shows the test setup for S-parameter measurements of a 1-pole filter where a bias can be applied. Application of a bias may not be required in many applications.

Figure 19 shows the test process for full characterization of a 4-port filter. Six measurement setups as described in Table 2 will be required, and the resulting S-parameter matrix will be a 4 × 4 matrix. This process may be expanded to fully characterize any M-pole filter, which will produce a 2M × 2M matrix.

The above-mentioned measurements are considered “basic” measurements. Data obtained from a “basic” measurement can be used with simulation tools to cover any common-mode or differential-mode situation, or combinations thereof, where source and load impedances may be different and asymmetric.

On filters where the only concern is common-mode attenuation under a condition where all source impedances are equal and all load impedances are equal, a single, simplified common-mode S-parameter measurement may be made on a multi-pole filter. The test setup is illustrated in Figure 20.

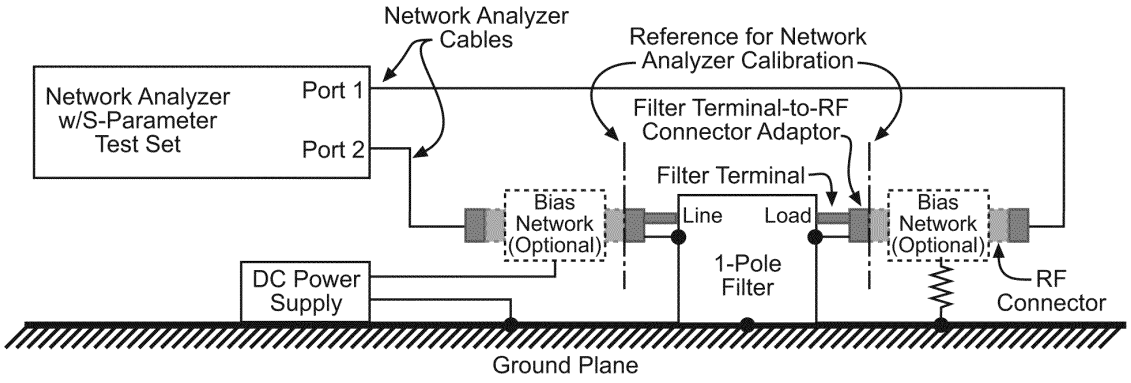

Figure 18—Test setup of S-parameter characterization of a 1-pole filter

Copyright © 2006 IEEE. All rights reserved.

Copyright The Institute of Electrical and Electronics Engineers, Inc.
Provided by IHS under license with IEEE
No reproduction or networking permitted without license from IHS
Not for Resale

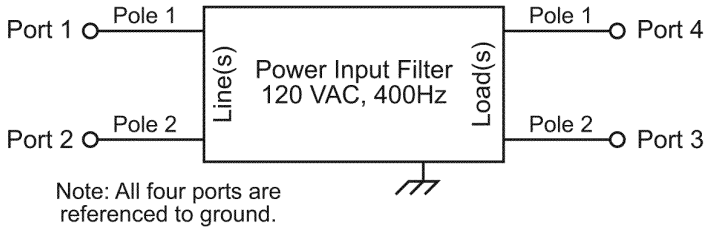

Figure 19—S-parameter process for a 2-pole EMI filter

Table 2—Filter under test port conditions for a 2-pole filter

Measurement setup number	Network analyzer—port 1	Network analyzer—port 2	Results
1	1	2	S11 S21 S12 S22
2	1	3	S11 S31 S13 S33
3	1	4	S11 S41 S14 S44
4	2	3	S22 S32 S23 S33
5	2	4	S22 S42 S24 S44
6	3	4	S33 S43 S34 S44

Note that both amplitude and phase must be measured. Ports that are not connected to the network analyzer shall be terminated, line-to-ground, with Z_o ohms.

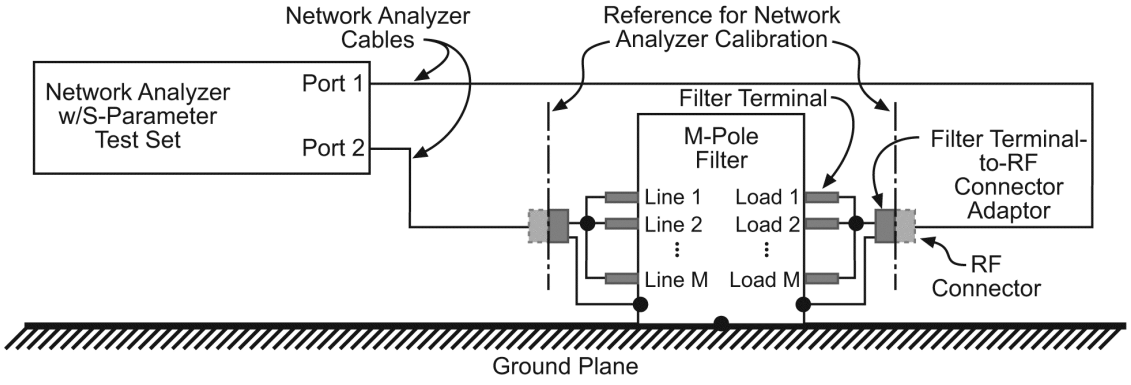

Figure 20—Test setup for common-mode-only S-parameter measurement

Copyright © 2006 IEEE. All rights reserved.
Copyright The Institute of Electrical and Electronics Engineers, Inc.
Provided by IHS under license with IEEE
No reproduction or networking permitted without license from IHS
Not for Resale

10.8.5 Test procedures

See Annex D for a discussion of test procedures.

11. Record keeping and data handling

Record keeping and data handling considerations need to be recognized at the time when the test schedule is defined, because strict observance of them will require allocation of sufficient personnel resources. Lack of observance can lead to regrets at the conclusion of the tests.

Many test programs are based on a limited number of test specimens; therefore, this practical limitation might make it difficult to repeat a test if spare, untested devices are not readily available. Consequently, it is important to provide as much monitoring of test conditions and parameters as practical, in some readily retrievable form. It is easier to delete seemingly trivial parameters or results during preparation of the published or disseminated record, should these results prove to be insignificant after review, than to attempt to recreate the test conditions later to capture a missing parameter.

A further precaution for obtaining meaningful data is to maintain some form of “on-line” plot or review of the data as they are accumulated so that anomalies in the data can be readily spotted, often leading to detection of some experimental error. Again, this is easier to correct as the test progresses rather than later, after the sequence is completed.

Data presentation shall be as follows:

a) Continuously and automatically plot amplitude versus frequency profiles on X-Y axis outputs. Manually gathered data produces fewer data points and is not the optimal method unless otherwise specified. Manually generated data may be used for plot verification. Data may be gathered manually if enough data points to establish a curve are captured.
b) Display the applicable upper and lower limit on each plot (i.e., 0 dB and –100 dB).
c) Provide plots for both the measurement and system check verification of the procedure.

Copyright © 2006 IEEE. All rights reserved.

Copyright The Institute of Electrical and Electronics Engineers, Inc.
Provided by IHS under license with IEEE
No reproduction or networking permitted without license from IHS
Not for Resale

Annex A

(informative)

Bibliography

[B1] Bronaugh, E. L., and Osburn, J. D. M., "Estimating EMC Measurement Uncertainty Using Logarithmic Terms (dB)," *IEEE 1999 International Symposium on Electromagnetic Compatibility Record,* Seattle, Washington, August 2–6, 1969.

[B2] Broydé, F., and Clavelier, E., "Designing Power-Line Filter for Their Worst-Case Behavior," *Proceedings of the 9th International Zürich Symposium on EMC,* pp. 583–588, March 12–14, 1991.

[B3] Broydé, F., and Clavelier, E.,"Minimum Attenuation and Input Impedance Domain of a Linear Filter," *Proceedings of the 8th Annual International Zurich Symposium on EMC,* pp. 261–266, March 1989.

[B4] CISPR 16-2: 2003, Specification for Radio Disturbance and Immunity Measuring Apparatus and Methods—Part 2: Methods of Measurement of Disturbances and Immunity.[11]

[B5] IEC 61000-4-3:2002, Electromagnetic Compatibility (EMC) Part 4-3: Testing and Measurement Techniques—Radiated, Radio-Frequency, Electromagnetic Field Immunity Test.[12]

[B6] IEEE 100, *The Authoritative Dictionary of IEEE Standards Terms*.[13, 14]

[B7] IEEE Std 1250-1995, IEEE Guide for Service to Equipment Sensitive to Momentary Voltage Disturbances.

[B8] *ISO Guide to the Expression of Uncertainty in Measurement (GUM),* 1995.[15]

[B9] Kimothi, S. K., *The Uncertainty of Measurements, Physical and Chemical Metrology: Impact and Analysis.* ASQ Quality Press, 2002.

[B10] Kraemer, J. G, "S-parameter Characterization for EMI Filters," *2003 IEEE International Symposium on Electromagnetic Compatibility,* vol. 1, pp. 361–366, August 18–22, 2003.

[B11] LAB 34:2002, *The Expression of Uncertainty in EMC Testing,* Edition 1, United Kingdom Accreditation Service (UKAS), 21–47 High Street, Feltham, Middlesex TW13 4UN, UK (http:// www.ukas.com).

[B12] Malack, J. A., and Engstrom, J. R., "RF Impedances of United States and European Power-lines," *IEEE Transactions on Electromagnetic Compatibility,* pp. 36–38, February 1976.

---

[11]CISPR documents are available from the International Electrotechnical Commission, 3, rue de Varembé, Case Postale 131, CH 1211, Genève 20, Switzerland/Suisse (http://www.iec.ch/). They are also available in the United States from the Sales Department, American National Standards Institute, 11 West 42nd Street, 13th Floor, New York, NY 10036, USA.

[12]IEC publications are available from the Sales Department of the International Electrotechnical Commission, Case Postale 131, 3, rue de Varembé, CH-1211, Genève 20, Switzerland/Suisse (http://www.iec.ch/). IEC publications are also available in the United States from the Sales Department, American National Standards Institute, 25 West 43rd Street, 4th Floor, New York, NY 10036, USA (http:// www.ansi.org/).

[13]IEEE publications are available from the Institute of Electrical and Electronics Engineers, Inc., 445 Hoes Lane, Piscataway, NJ 08854, USA (http://standards.ieee.org/).

[14]The IEEE standards or products referred to in this clause are trademarks of the Institute of Electrical and Electronics Engineers, Inc.

[15]This publication is available from Global Engineering Documents, 15 Inverness Way East, Englewood, CO 80112, USA (http://global.ihs.com/).

Copyright © 2006 IEEE. All rights reserved.

Copyright The Institute of Electrical and Electronics Engineers, Inc.
Provided by IHS under license with IEEE
No reproduction or networking permitted without license from IHS Not for Resale

[B13] MIL-PRF-15733H-2003, General Specifications for Radio Frequency Interference Filters and Capacitors.[16]

[B14] MIL-STD-220A-1978, Method of Insertion Loss Measurement.

[B15] MIL-STD-461E-1999, Requirements for the Control of Electromagnetic Interference Characteristics of Subsystems and Equipment.

[B16] Nicholson, J. R., and Malack, J. A.,"RF Impedance of Power-line and Line Impedance Stabilization Networks in Conducted Interference Measurements," *IEEE Transactions on Electromagnetic Compatibility,* pp. 84–86, May 1973.

[B17] Schlicke, H. M., "Assuredly effective filters," *IEEE Transactions on Electromagnetic Compatibility,* vol. EMC-18, no. 3, pp. 106–110, August 1975.

[B18] Schlicke, H. M., "Filtering," in *Practical Design for Electromagnetic Compatibility,* E. Ficchi, ed., Hayden Comp, 1971, pp. 93–132.

[B19] Vines, R. M. et al., "Impedance of the Residential Power-Distribution Circuit," *IEEE Transactions on Electromagnetic Compatibility,* vol. EMC-27, no. 1, pp. 6–12, February 1985.

[16]MIL publications are available from Customer Service, Defense Printing Service, 700 Robbins Ave., Bldg. 4D, Philadelphia, PA 19111-5094.

Copyright © 2006 IEEE. All rights reserved.

Copyright The Institute of Electrical and Electronics Engineers, Inc.
Provided by IHS under license with IEEE
No reproduction or networking permitted without license from IHS Not for Resale

Annex B

(normative)

Filter labeling

B.1 Introduction to requirements

The *method of measurement code* in Table B.1 refers to the method of measuring the 20 dB cutoff and the stop band numbers.

Table B.1—List of codes corresponding with filter test methods

Code	Test method description	Sublcause reference
A	Quality assurance—No load (10 kHz to 1 GHz)	10.1
B	Quality assurance—Loaded (10 kHz to 20 MHz)	10.2
C	RF characteristics mismatched impedance—No load (100 kHz to 30 MHz)	10.3
D	Variable source impedance attenuation measurement (100 Hz to 100 kHz)	10.4
E	Attenuation measurement (100 kHz to 30 MHz)	10.5
F	Aperture leak test by electric fields (1 GHz to 10 GHz)	10.6
G	Voltage drop and waveform quality test (linear/nonlinear loading)	10.7
H	S-parameter measurement (100 Hz to 30 MHz)	10.8

B.2 Example filter label

Figure B.1 is for illustrative purposes. The intent of this normative figure is that the filter be labeled with traceable measurement techniques and a minimum of voltage and filter characteristics.

Copyright © 2006 IEEE. All rights reserved.
Copyright The Institute of Electrical and Electronics Engineers, Inc.
Provided by IHS under license with IEEE
No reproduction or networking permitted without license from IHS
Not for Resale

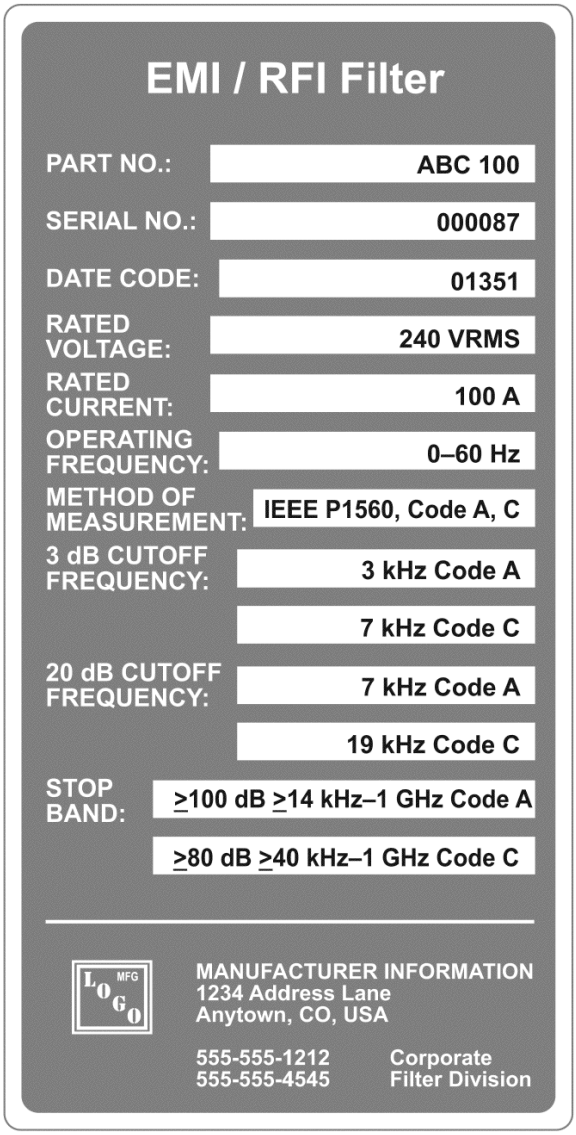

Figure B.1—Example template for specifications label for EMI/RFI (power-line filter) at the 3 dB and 20 dB points

Copyright © 2006 IEEE. All rights reserved.

Copyright The Institute of Electrical and Electronics Engineers, Inc.
Provided by IHS under license with IEEE
No reproduction or networking permitted without license from IHS
Not for Resale

Annex C

(informative)

Waveform quality and harmonic loading-related performance of power-line filters

C.1 Fundamental voltage drop test for power-line filters

Power-line filters are designed to maintain voltage quality at the load while providing the intended insertion loss. Most performance specifications require power-line filters to have less than a 1% fundamental voltage drop under rated full-load conditions. The following is the voltage drop test for power-line filters as described in subclause 4.6.8 of MIL-PRF-15733H-2003 [B13].

This description is for filters rated ac only. The voltage drop is the difference between the input voltage to the filter and the output voltage of the filter when the filter is carrying rated current at rated voltage with a resistive load at the maximum rated power frequency. The method of voltage measurement is shown in Figure C.1. Measurements shall be made by using expanded scale-type meters, which will enable voltage differences of less than 1 V to be read.

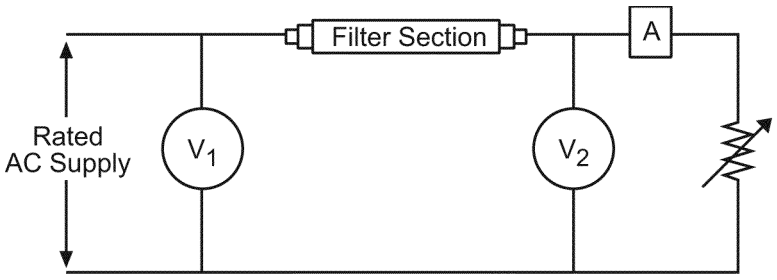

Figure C.1—Measurements of voltage drop (MIL-PRF-15733H-2003 [B13])

Test data results show that the simple voltage drop test that is specified for power-line type filters does not provide a true indication of the voltage delivery performance of the filter under nonlinear loading conditions. The problem here is that an rms (root-mean-square) value is not a sufficient measure of voltage quality. THD, crest factor (the peak of the voltage divided by the rms values), slope, and number of zero-crossings are all important factors that may affect the performance of the load. Meeting only the rms voltage requirement does not guarantee that the other quality factors will be maintained.

C.2 Characteristics of nonlinear loads

The number and significance of nonlinear, harmonic-producing loads have increased substantially over the past several years. The power supplies for dc circuits used in most single-phase power electronic devices are the main source of harmonic currents. Personal computers (PCs), printers, faxes, and other communication devices, medical equipment, television receivers, and many other electronic loads used in residential and commercial environments are equipped with a capacitor-filtered diode bridge rectifier to convert the incoming utility voltage to the dc level required by these devices.

Copyright © 2006 IEEE. All rights reserved.
Copyright The Institute of Electrical and Electronics Engineers, Inc.
Provided by IHS under license with IEEE
No reproduction or networking permitted without license from IHS
Not for Resale

Figure C.2 shows a basic model of a switch-mode power supply (SMPS) and its power source. A typical SMPS consists of a full-wave diode bridge rectifier, dc-smoothing capacitor, and a dc voltage regulator. The model in Figure C.2 includes the following:

V_{th} is the value of the Thevenin-equivalent system voltage
R_{th}, L_{th} is the value of the Thevenin-equivalent system impedance parameters
R_1,L_1 is the value of the local line-impedance parameters
C is the value of the smoothing capacitor
R_{eq} is the value of the equivalent load resistance

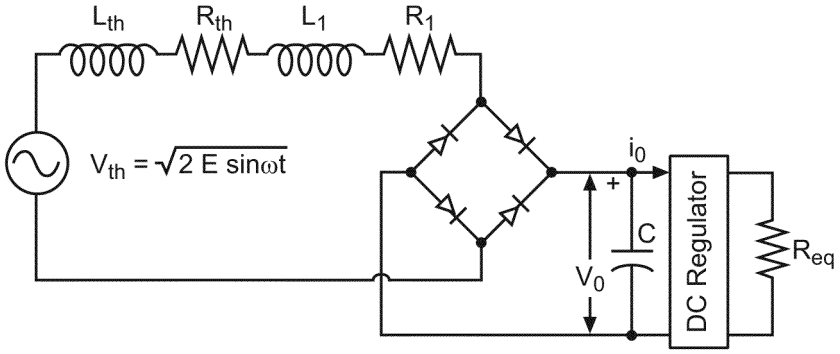

Figure C.2—Capacitor-filtered diode bridge rectifier circuit in a SMPS

As shown in Figure C.3, the input current drawn by these SMPSs is characterized by a pulse-shaped waveform formed by current flowing during the charging period of the smoothing capacitor. This type of current is rich in odd harmonics, and the THD is typically in the range of 80% to 120%. The main harmonic components in the load current are the 3rd, 5th and 7th harmonic, as shown in the harmonic spectrum in Figure C.3 (right). Because of the symmetry in the waveform for the positive and the negative half cycle, there are no even harmonic components (2nd, 4th, and so on). The current waveform is also characterized by a high crest factor in the order of 1.8 to 2.5 as compared to a 1.414 crest factor for a sinusoidal wave. Because rms current is computed using all the frequency components—including the fundamental—these loads draw a much higher rms current as compared to the fundamental (60 Hz) component.

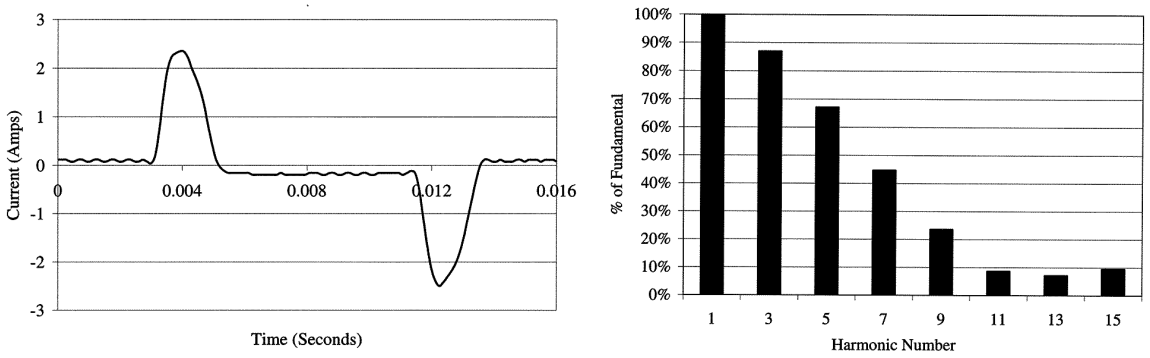

Figure C.3—Input current waveform of an SMPS (left) and harmonic currents of the nonlinear load current of an SMPS (right)

Copyright © 2006 IEEE. All rights reserved.

Copyright The Institute of Electrical and Electronics Engineers, Inc.
Provided by IHS under license with IEEE
No reproduction or networking permitted without license from IHS
Not for Resale

C.3 Voltage distortion resulting from nonlinear load current

The nonlinear load current injected into the power system interacts with the system impedance, resulting in voltage distortion. Figure C.4 shows the resulting voltage at the common point of a nonlinear load connection. The high pulse of load current causes a higher voltage drop, resulting in a flat-top output voltage. The amount of voltage distortion depends on both the magnitudes of the system impedance and the nonlinear load current. For low-voltage public power systems in the U.S., the system impedance typically ranges from 0.01 ohms to 0.3 ohms resistive and from 0.004 ohms to 0.4 ohms inductive reactance at 60 Hz (L = 10 μH to 1000 μH). The standard impedances specified by International Electrotechnical Commission (IEC) for 50 Hz system are 0.4 ohms resistive and 0.25 ohms inductive reactance at 50 Hz (L = 796 μH).

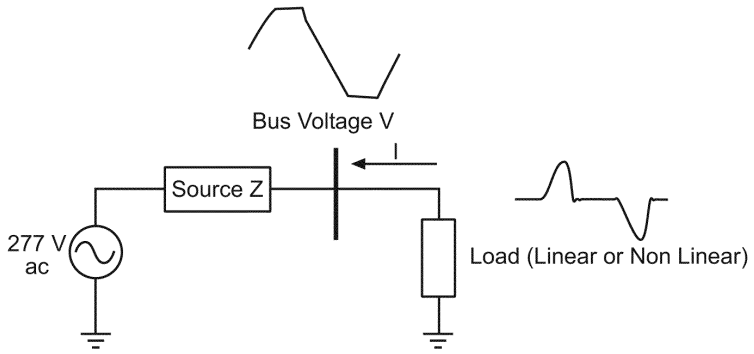

Figure C.4—Voltage distortion resulting from nonlinear current

The addition of a power-line filter in a circuit changes the total system impedance and increases the voltage distortion at the load. Figure C.5 shows the voltage per amp of current at different frequencies for two cases: system impedance only (0.4 ohms resistance and 600 μH inductance) and system impedance plus impedance of a typical double-element p-filter (L = 100 μH and C = 50 μF). This curve, commonly known as a *frequency scan,* clearly shows the effect of the additional impedance introduced by the filter inductor and capacitor elements. One would expect that for the same amount of harmonic current, the presence of the filter would cause an increased voltage distortion at the load terminal and thereby degrade the quality of the voltage fed to the load.

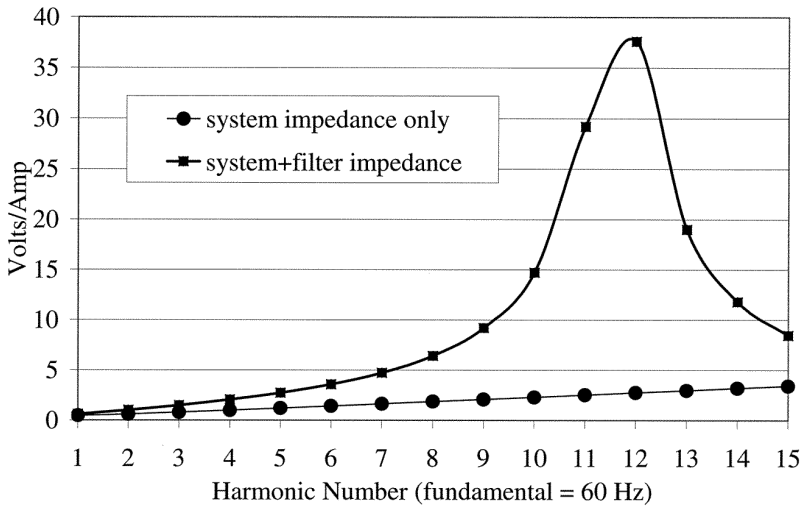

Figure C.5—Voltage per amp of current at different frequencies

Copyright © 2006 IEEE. All rights reserved.
Copyright The Institute of Electrical and Electronics Engineers, Inc.
Provided by IHS under license with IEEE
No reproduction or networking permitted without license from IHS
Not for Resale

Figure C.6 and Figure C.7 show the filter output voltage waveform gathered from a laboratory test with one diode bridge rectifier as the test load and a laboratory test with several PC power supplies.

The filter output voltage waveforms for most of the cases show a similar pattern of high distortion, low crest factor (flat-topping), multiple zero-crossings, and ringing. This type of voltage waveform is expected in any shielded enclosure where nonlinear loads such as PCs or other forms of SMPSs are used. The voltage flat-topping is primarily caused by the interaction of the filter inductance with the nonlinear load current. The multiple zero-crossings and the ringing are, on the other hand, mainly caused by the interaction with the nonlinear load current and the filter capacitors.

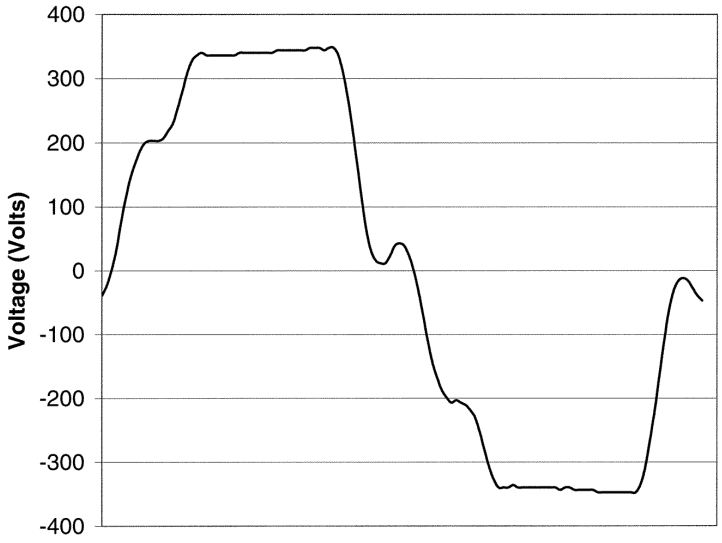

Figure C.6—Filter output voltage waveform for diode bridge rectifier load

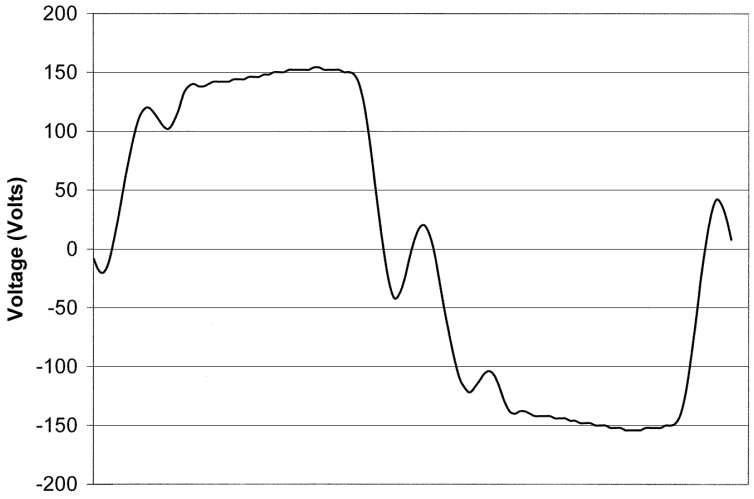

Figure C.7—Filter output voltage waveform for PC power supply load

Copyright © 2006 IEEE. All rights reserved.

Copyright The Institute of Electrical and Electronics Engineers, Inc.
Provided by IHS under license with IEEE
No reproduction or networking permitted without license from IHS
Not for Resale

In order to assess the applicability of the fundamental voltage drop test in determining voltage quality at the filter output, the same test filter operated with a resistive load was connected to a diode bridge rectifier load. Filter input and output waveforms for a 15 A nonlinear load current (25% of the filter full-load rated current) were measured. The waveform and measurements are shown in Figure C.8 and Table C.1. The filter under test easily passes the voltage drop test as the rms voltage at the input and at the output differs by only 0.3%. However, the filter's output voltage distortion and crest factor are considerably different from its input voltage. There are also multiple zero-crossings in the output. This result points out the inadequacy of the voltage drop test to ensure quality of the voltage waveform fed to the loads inside a shielded enclosure.



Figure C.8—Filter input and output voltage waveform for 25% loading (diode bridge rectifier load)

Table C.1—Measured characteristics of filter input and output waveform

Voltage characteristics	Input	Output	Difference (%)
RMS (volts)	120.3	120.7	0.3
THD (%)	3.6	13.9	286
Crest factor	1.39	1.33	–4.3
Zero-crossings per cycle	Nominal (two)	Two extra per cycle	100

C.4 Effect of filter output voltage on load operation

There has been anecdotal evidence that power-line filters have caused malfunctioning of various equipment inside shielded enclosures, such as electronic processing equipment, clock circuits, and power converters. Even uninterruptible power supplies (UPSs), which may be installed to protect critical loads, have themselves been affected by the voltage waveform at the output of a power-line filter. Some reasons for these problems may be seen in the voltage waveforms at the filter output shown in Figure C.7 and Figure C.8. These waveforms are expected at the filter output when the loads are nonlinear, most likely PCs and computer peripherals. Some of the common affected equipment and the negative interactions are as follows:

Copyright © 2006 IEEE. All rights reserved.
Copyright The Institute of Electrical and Electronics Engineers, Inc.
Provided by IHS under license with IEEE
No reproduction or networking permitted without license from IHS
Not for Resale

a) The voltage-sensing circuit in a UPS that determines the transfer from utility line to battery during an undervoltage condition can be susceptible to the distorted voltage waveform present at the filter output. One type of voltage-sensing circuit is based on peak detection. For a sinusoidal voltage waveform, the peak is 1.414 (square root of 2.0) times the rms voltage. However, this condition does not hold true for a distorted voltage waveform. The ratio of peak to rms voltage for a flat-topped voltage waveform is lower than 1.414. Therefore, the UPS voltage-detection circuitry may initiate a transfer to battery because the incoming peak voltage is outside the UPS voltage tolerance.

b) The same situation could occur for voltage-sensing circuits based on slope detection or rectified average-value measurement. In general, any sensing circuit that expects the voltage waveform to be sinusoidal will not work properly with high distortion. Some UPS systems are also equipped with over/under frequency relays, which may respond incorrectly to the distorted voltage waveform or multiple zero-crossings.

c) The SMPSs used in PCs can operate as long as the rms voltage remains within the steady-state tolerances. In fact, a typical PC operates satisfactorily with a rectangular voltage waveform so long as the peak voltage is sufficiently high. However, flat topping of the voltage waveform results in a reduced dc-bus voltage in the power supply. Also, the additional line impedance caused by the series-connected power-line filter may cause an undervoltage condition during intermittent high-current demand of loads such as laser printers or copier heaters. The combination of these two factors—voltage flat-topping and inrush current—may cause PCs and other equipment to reset.

d) Extra zero-crossings of the filter output voltage will negatively interact with any load that requires a timing signal synchronized with the power-line voltage. One such device is a digital clock; another is a power converter using a line-synchronized control. For example, silicon-controlled rectifiers (SCRs) used in a rectifier or converter must be triggered to begin conduction and must see a zero-crossing to end conduction. Voltage is sometimes regulated by varying the “on” time to “off” time using phase angle control. When the voltage crosses zero more than two times per cycle, an SCR may fire erratically from one cycle to the next. Ideally, timing circuits should respond only to the 50 Hz or 60 Hz fundamental voltage waveforms.

e) The long-term effect of distorted waveforms on electromechanical loads such as motors depends not only on the level of distortion but also on the particular shape of the voltage waveform. In general, the flat-topping of voltage waveforms results in additional losses and temperature rise in electromagnetic devices. Based upon the decrease in lifetime with temperature for different insulating materials, reduced life can be correlated with the harmonic distortion of applied voltage.

C.5 Effect of nonlinear loading on filter components

The effect on filter capacitors is not well understood. Plastic-film capacitors have been typically used in power-line filter applications with foil and more commonly metallized film. The voltage rating used by a capacitor manufacturer is usually based on dc voltage. The rating is the specified operating dc voltage that the capacitor can withstand continuously at a given temperature. In the case of applied ac voltage, the capacitor dielectric is exposed to the peak voltage for a brief period during each cycle. However, as was shown in Figure C.9, Figure C.10, and Figure C.11, the resulting voltage waveform at the filter output terminal has a lower peak voltage than a normal sinusoidal waveform. Therefore, the likelihood of a dielectric breakdown because of voltage stress is reduced.

Nevertheless, current through the capacitor with the expected filter output voltage waveform could be a critical factor. Metallized-film capacitors have a limit to the amount of peak current that they can withstand. In the case of a sinusoidal ac waveform, the current stress on a metallized-film capacitor is normally below the limitation of the capacitor. In this case, the shunt capacitor on the load side of the filter will be subjected to the distorted voltage waveform, which has a sharp slope at the edges and a relatively flat characteristic in the middle.

Copyright © 2006 IEEE. All rights reserved.

Copyright The Institute of Electrical and Electronics Engineers, Inc.
Provided by IHS under license with IEEE
No reproduction or networking permitted without license from IHS
Not for Resale

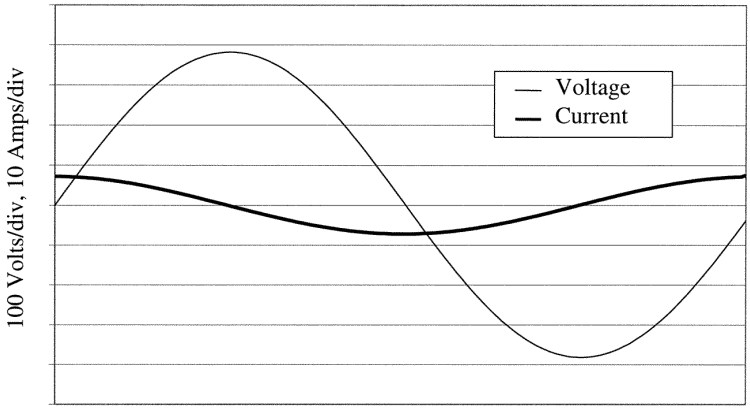

Figure C.9—Capacitor current under sinusoidal voltage waveform (calculated)

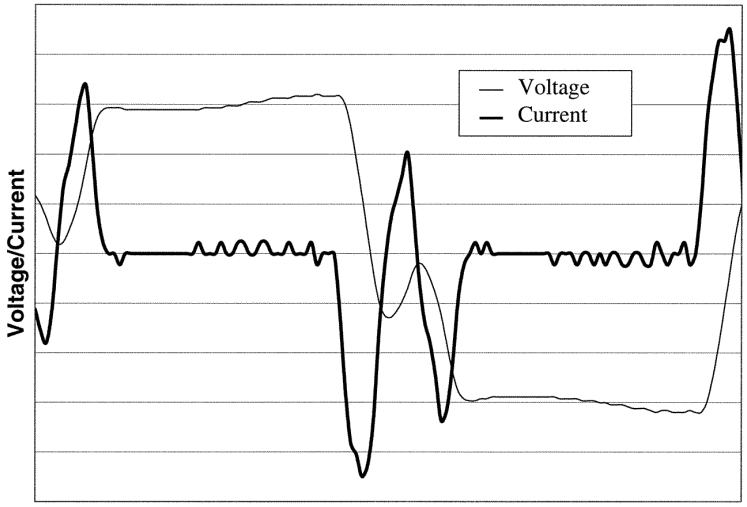

Figure C.10—Capacitor current under distorted voltage waveform expected at power-line filter output (calculated)

Realizing that the current through a capacitor is proportional to the rate of change of voltage (I = C dv/dt), one would expect a high current through a capacitor during the high rate of change in voltage. Figure C.9 and Figure C.10 show the current through a 50 μF capacitor subjected to a sinusoidal voltage and a distorted voltage that would be expected with power-line filters and nonlinear loads. The figures are based upon simple numerical calculations using digitized voltage data. These figures clearly show that the peak current through the capacitor under the distorted-voltage conditions can be several times higher than what would be expected under sinusoidal voltage conditions.

Laboratory tests were conducted with a 50 μF capacitor under normal and distorted voltage created with an arbitrary waveform generator and a power amplifier. The results, shown in Figure C.11, confirm the increase in peak current through the capacitor for distorted voltage. If the peak current is too large, it is possible that the interconnection between the metallized-electrode layer and the end spray could gradually be eroded (end spray is a technique in capacitor construction that provides connection from a metallized film to the capacitor leads). Under these conditions, the capacitor dissipates more heat and may lose capacitance. In the worst case, it is possible that the capacitor could fail open.

Copyright © 2006 IEEE. All rights reserved.
Copyright The Institute of Electrical and Electronics Engineers, Inc.
Provided by IHS under license with IEEE
No reproduction or networking permitted without license from IHS
Not for Resale

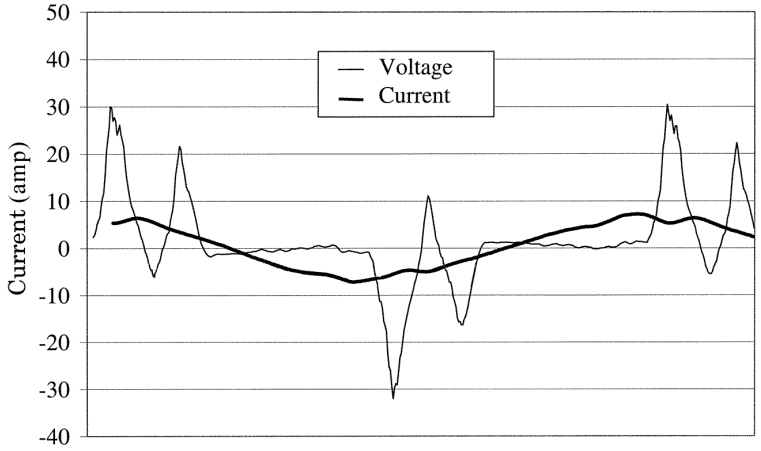

Figure C.11—Measured capacitor current for sinusoidal and distorted voltage

C.6 New voltage drop test for power-line filters

Given that many nonlinear loads are used in shielded enclosures, the working group committee developing this standard proposes a change in the voltage drop test as required by MIL-PRF-15733H-2003 [B13] and subsequently used by most end users. The rationale behind changing this test is that nonlinear loads are increasing rapidly. In fact, it will be difficult, if not impossible, to find enclosures with no nonlinear loads in the near future. Understanding this fundamental change in the load type, it is only natural that ensuring quality voltage should depend not only on the rms of the voltage but also on the waveform characteristics, such as crest factor, THD, and zero-crossings. Also, understanding that nonlinear loads will affect the voltage waveform even without the presence of a power-line filter, the emphasis of the test is to ensure that the incremental effect of a power-line filter on the voltage waveform should be limited.

The proposed waveform quality test will require a nonlinear load and a diode bridge rectifier proposed as a standard nonlinear load. The full-wave bridge rectifier should be capable of handling the rated full-load current of the filter under test. The dc bus capacitor should be sized to ensure that the crest factor of the load current is greater than 2.2 when connected to the power supply source without the power-line filter. The source should be stiff enough to deliver full-load current for the filter under test.

Two power-line filters rated at 100 A were tested using this method at 50% loading. The load current, input and output voltage waveforms, and the measured electrical parameters are shown in Figure C.12, Figure C.13, Figure C.14, and Table C.2. Clearly, the output voltage waveform of the two filters is quite different for the same nonlinear loading. However, there is not much of a difference in the rms voltage magnitude.

Copyright © 2006 IEEE. All rights reserved.

Copyright The Institute of Electrical and Electronics Engineers, Inc.
Provided by IHS under license with IEEE
No reproduction or networking permitted without license from IHS
Not for Resale

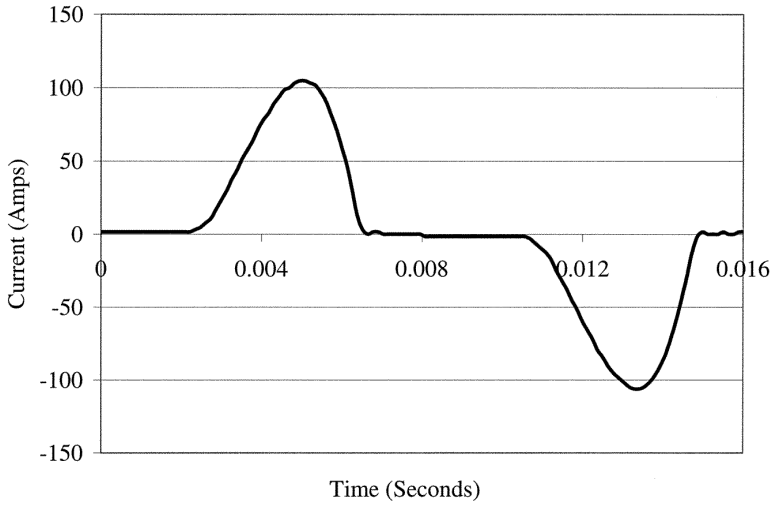

Figure C.12—Diode bridge rectifier load current waveform for filter under test

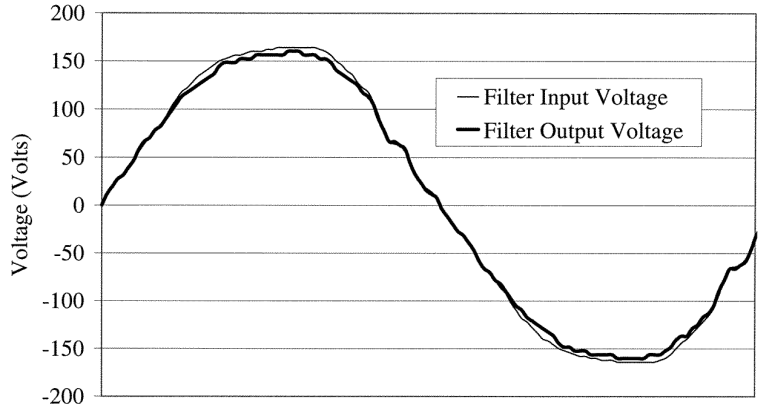

Figure C.13—Input and output voltage waveform for Filter A

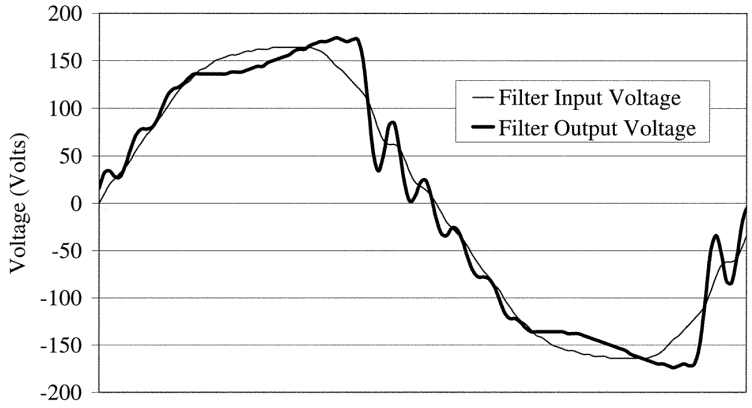

Figure C.14—Input and output voltage waveform for Filter B

Copyright © 2006 IEEE. All rights reserved.
Copyright The Institute of Electrical and Electronics Engineers, Inc.
Provided by IHS under license with IEEE
No reproduction or networking permitted without license from IHS
Not for Resale

Table C.2—Input and output voltage waveform quality parameters for Filters A and B

Voltage quantity	Filter A			Filter B		
	Voltage input (V)	Voltage output (V)	Voltage difference (%)	Voltage input (V)	Voltage output (V)	Voltage difference (%)
RMS	120.2	118	–2	120.2	121.1	–1
THD (%)	4.9	4.2	–14	4.8	19.1	298
Crest factor	1.37	1.37	0	1.37	1.43	4

The following quantities should be measured at both the input and output terminal of the filter: rms voltage, voltage THD, and voltage crest factor. The difference between input and output measurements for these quantities should be within a specified limit to ensure that the incremental effect of a power-line filter in degrading the quality of the load voltage is limited. As a starting point, the authors propose the limits in Table C.3 for the various voltage quality factors when a filter is tested with a diode bridge rectifier load.

Table C.3—Proposed limits for waveform quality test

Voltage quantity	Difference between input and output terminals (%)
RMS	±1
THD	±10
Crest factor	±10

In essence, this proposed test is very similar to the voltage drop test; the only difference is in the change of load type from linear to nonlinear and the additional measurement of several waveform characteristics. The manufacturer can decide to perform this test for a rated current less than the filter rating for power-frequency current. In that case, filters should have a linear and a nonlinear current rating and be properly marked to indicate that.

Copyright © 2006 IEEE. All rights reserved.

Copyright The Institute of Electrical and Electronics Engineers, Inc.
Provided by IHS under license with IEEE
No reproduction or networking permitted without license from IHS
Not for Resale

Annex D

(informative)

S-Parameters

D.1 Introduction

Product designers and system integrators often use complex simulation and analysis to determine EMI filter requirements or the suitability of a particular filter. Analysis and simulation is often done in both the time domain and the frequency domain. Input data for the analysis and simulation include source and load impedances, as complex numbers, that are a function of frequency. The simulation/analysis input data will also include characteristics of other filters and components that are relevant.

Data from most common EMI filter response characterization methods, such as MIL-STD-220B, is valid only under a particular source and load impedance. Accurate use of these data under conditions of different source and load impedances is usually impossible.

Scattering parameter (S-parameter) characterization data, which can be obtained using a network analyzer (or other suitable equipment for obtaining S-parameters), can be used under any source and load condition to produce accurate analysis results. It can also be used for specifying EMI filter performance. S-parameter characterization can be preformed on not only single-pole devices, but also on multi-pole devices, such as a three-phase power input filter. The resulting S-parameter data can be imported directly into modern simulation tools to allow determination of expected common-mode and differential-mode responses in both time and frequency domain. S-parameters are a shared language between simulation and measurement.

D.2 Background

S-parameters are based on the flow of forward and reflected power into network ports. An EMI filter is a network, with the simplest filter being a 2-port network: port 1 being the “input” port, and port 2 being the “output” port. Figure D.1 shows the definitions for the four scattering parameters associated with a 2-port network. All ports are referenced to a common ground, which in almost all cases is earth or chassis ground. The classic 2-port network may be representative of a 1-pole filter.

A line-to-ground impedance, such as a source, load, or a power-factor correction device, may be represented as a 1-port network, which has only one S-parameter, S11. S11 is the input reflection coefficient with respect to the measurement base impedance.

S-parameters are measured in the frequency domain using a network analyzer with an S-parameter test set. S-parameters have a magnitude and a phase. Measurements are made with respect to a reference impedance, which is usually 50 ohms or 75 ohms. This impedance must be known when analyzing the response of a characterized filter if one needs to consider the source and load impedances, or other connected networks that have been characterized with S-parameters. Figure D.2 shows how the input and output voltages present at a 1-pole EMI filter can be computed if the filter’s S-parameters, and the S-parameters or impedance of the source and load, are known. Note that the source and load impedances do not have to be equal to the base measurement impedance.

--`,,```,,,,````-`-`,,`,,`,`,,`---
Copyright © 2006 IEEE. All rights reserved.
Copyright The Institute of Electrical and Electronics Engineers, Inc.
Provided by IHS under license with IEEE
No reproduction or networking permitted without license from IHS
Not for Resale

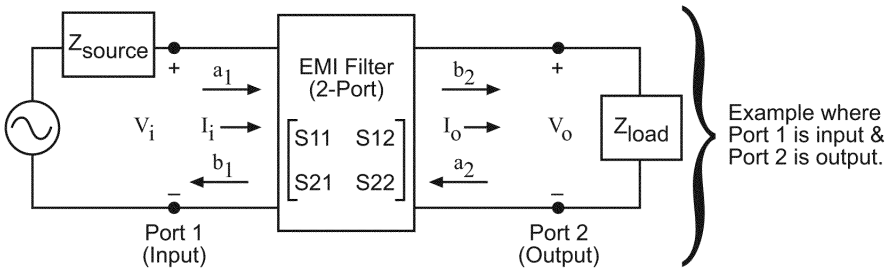

ai is the wave component into port *i* and is equal to $1/2\left[\frac{V_i}{\sqrt{Z_o}} + \sqrt{Z_o} * I_i\right]$

bi is the wave component out of port *i* and is equal to $1/2\left[\frac{V_i}{\sqrt{Z_o}} - \sqrt{Z_o} * I_i\right]$

$\mathbf{Z_o}$ is an arbitrary base impedance for measurement and analysis

$\mathbf{V_i}$ and $\mathbf{V_o}$ are the input port and the output port voltages

$\mathbf{I_i}$ and $\mathbf{I_o}$ are total input port and total output port currents

$\mathbf{Z_{source}}$ and $\mathbf{Z_{load}}$ are the source and load impedances

$\mathbf{E_s}$ is the open circuit source voltage

$S_{11} = \left.\frac{b1}{a1}\right|_{a2=0}$ = Input Reflection Coefficient*

$S_{12} = \left.\frac{b1}{a2}\right|_{a1=0}$ = Reverse Transmission Coefficient*

$S_{21} = \left.\frac{b2}{a1}\right|_{a2=0}$ = Forward Transmission Coefficient*

$S_{22} = \left.\frac{b2}{a2}\right|_{a1=0}$ = Output Reflection Coefficient*

*with the other port terminated into the matching impedance (Z_O)

Figure D.1—S-parameter definition for a 2-port network

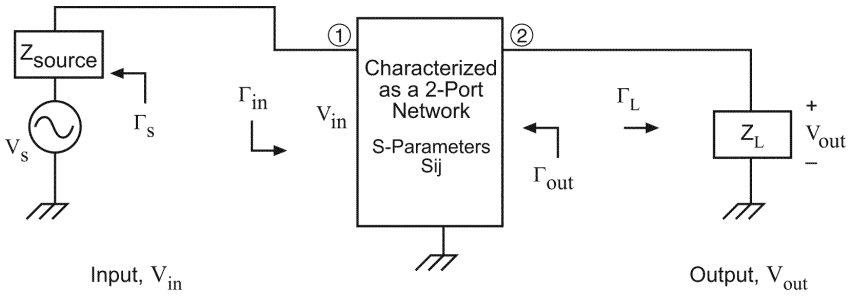

$\Gamma_L = S_{11_}Z_L = S_{11}\text{of } Z_L = (Z_L - Z_O) / (Z_L + Z_O)$

$\Gamma_S = S_{11_}Z_S = S_{11}\text{of } Z_S$

$Z_S = Z_O (1 - \Gamma_S) / (1 + \Gamma_S) = Z_O (1 - S_{11_}Z_S) / (1 + S_{11_}Z_S)$

$\Gamma_{in} = S_{11} + S_{12}S_{21}\Gamma_L / (1 - S_{22}\Gamma_L)$

$Z_{in} (1 + \Gamma_{in}) / (1 - \Gamma_{in})$

$V_{in} = V_S Z_{in} / (Z_{in} + Z_{source})$

$V_{out} = V_{in}S_{21}(1+\Gamma_L) / [(1-S_{22}\Gamma_L) + S_{11}(1-S_{22}\Gamma_L) + S_{21}\Gamma_L S_{12}]$

Note: Reflection Coefficients (Γ) are computed using the same base impedance (Z_o) used to determine the S-parameters.

All variables are complex numbers that are a function of frequency.

Figure D.2—S-parameter definition for a 2-port network

Copyright © 2006 IEEE. All rights reserved.

Copyright The Institute of Electrical and Electronics Engineers, Inc.
Provided by IHS under license with IEEE
No reproduction or networking permitted without license from IHS
Not for Resale

S-parameters can be used to characterize a multi-pole filter where coupling between poles exists, as would be the case if the filter contains a common-mode choke. Figure D.3 and Figure D.4 illustrate such 2-pole filters: the one in Figure D.3 being a power input filter, and the one in Figure D.4 being a balanced line signal filter. Multi-pole filters will have two ports per pole (an input port and an output port per pole) and should be labeled according to the definition in Figure D.5. The S-parameter matrix for a M-pole filter will be a 2M × 2M matrix with $4M^2$ elements. If expressed as an N-port filter, the S-parameter matrix will be N × N with N^2 elements. Figure D.6 illustrates an M-pole filter and the resulting S-parameter matrix form. Note that per the definitions provided in Figure D.1, S_{XX} is the reflection coefficient at port X with respect to Z_o, and with all other ports terminated into Z_o. Similarly, S_{XY} is the transmission coefficient from port Y to port X with all ports terminated into Z_o. Thus the complete S-parameter matrix can be determined by measurement using a common 2-port network analyzer. Figure D.6 illustrates the set of measurements required to produce the S-parameter matrix for a 2-pole filter. Figure D.7 shows an example of a 2-pole EMI filter.

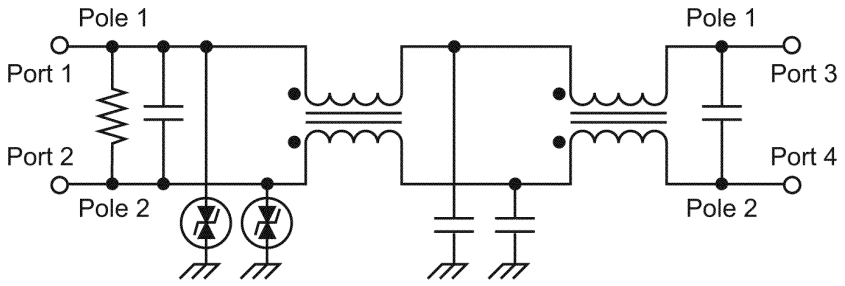

Figure D.3—Two-pole, 4-port power input filter

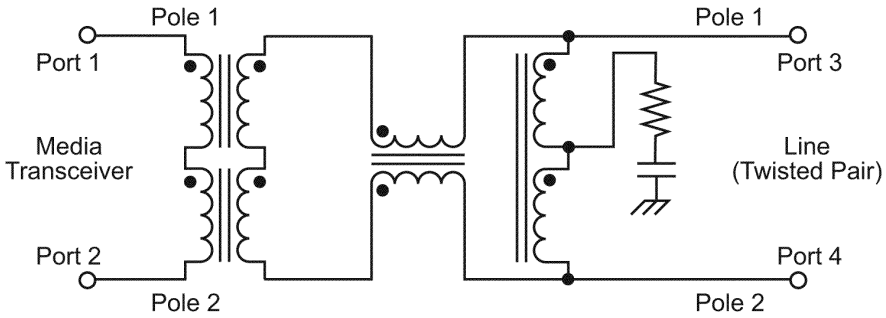

Figure D.4—Two-pole, 4-port balanced signal line filter

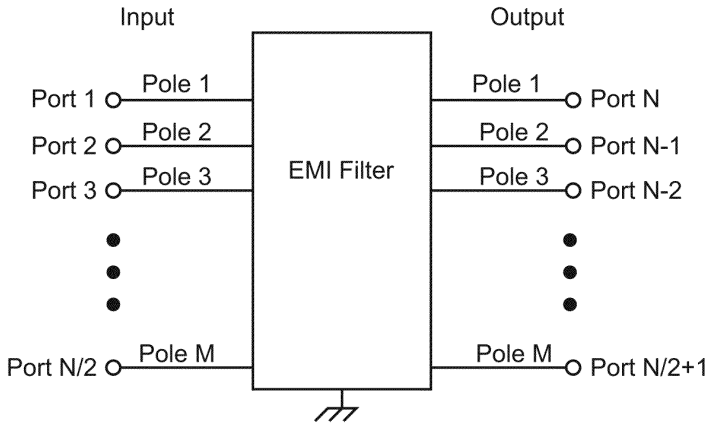

Figure D.5—Port-labeling definition for an M-pole EMI filter

Copyright © 2006 IEEE. All rights reserved.
Copyright The Institute of Electrical and Electronics Engineers, Inc.
Provided by IHS under license with IEEE
No reproduction or networking permitted without license from IHS
Not for Resale

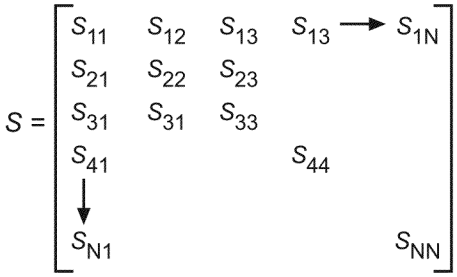

Figure D.6—S-parameters for an M-pole EMI filter

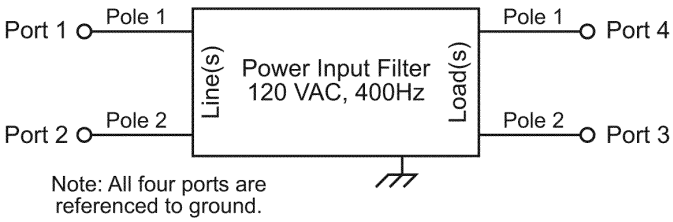

Figure D.7—Example of a 2-pole EMI filter

Filters and components that have been characterized with S-parameters can be inserted into schematics in many analysis tools as N-port networks linked to a data file containing the S-parameter data. The format varies slightly between tools but in general includes a header line such as "`# GHZ S DB R 5`," which in this case indicates that frequency data points are in GHz, S-parameter data are provided, the data format is magnitude in decibels and angle in degrees, with measurements normalized (referenced) to 50 ohms. The header line is followed by data lines. Typically, the data for a 4-port network may have the format shown in Table D.1.

Table D.1—S-parameter data for a 4-port network

Frequency	Mag	Ang	Mag	Ang	Mag	Ang	Mag	Ang
f_1	$\|S11\|$	$\angle S11$	$\|S12\|$	$\angle S12$	$\|S13\|$	$\angle S13$	$\|S14\|$	$\angle S14$
f_1	$\|S21\|$	$\angle S21$	$\|S22\|$	$\angle S22$	$\|S23\|$	$\angle S23$	$\|S24\|$	$\angle S24$
f_1	$\|S31\|$	$\angle S31$	$\|S32\|$	$\angle S32$	$\|S33\|$	$\angle S33$	$\|S34\|$	$\angle S34$
f_1	$\|S41\|$	$\angle S41$	$\|S42\|$	$\angle S42$	$\|S43\|$	$\angle S43$	$\|S44\|$	$\angle S44$

where

f_1 = Frequency
Mag = Magnitude, in decibels, of S-parameter Sij
Ang = Angle, in degrees, of S-parameter Sij

Copyright © 2006 IEEE. All rights reserved.

Copyright The Institute of Electrical and Electronics Engineers, Inc.
Provided by IHS under license with IEEE
No reproduction or networking permitted without license from IHS
Not for Resale

It is important to note that S-parameter data are valid only at the operating point at which they are taken. A linear response around that operating point is assumed. However, by the use of bias networks, measurements can be made under a particular operating condition. Figure D.8 illustrates the use of a bias network. Most importantly, the biasing network's characteristics must be accounted for when the network analyzer is calibrated.

Circuit simulators that accept S-parameter component models can be used to solve source and load voltages due to interference applied in both common and differential modes, or combinations thereof. Figure D.9 illustrates a typical model setup for examining the effects of a differential interference, whereas Figure D.10 illustrates a typical model setup for examining the effects of common-mode interference.

It is important to note that basic S-parameter characterization data are not very useful for specifying filter common-mode performance when N is greater than 2 (e.g., a filter with more than 1 pole). However, a 2-port common-mode characterization can be done on a filter with more than one pole to provide information on expected common-mode rejection (S21 and S12) and common-mode reflection (S11 and S22). The measurement setup is illustrated in Figure D.11. Specifications relating to the common-mode S-parameters, along with the pole port to pole port transfer S-parameters (e.g., S41 and S32 for the filter illustrated in Figure D.6), are useful for filter comparison and procurement specification purposes. Figure D.12 is an example of filter port assignments.

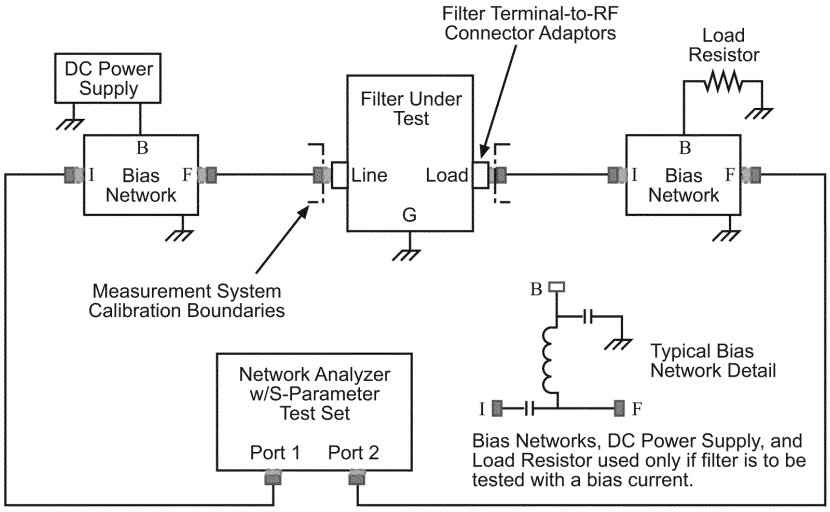

Figure D.8—Example use of a bias network with S-parameter measurements

Copyright © 2006 IEEE. All rights reserved.
Copyright The Institute of Electrical and Electronics Engineers, Inc.
Provided by IHS under license with IEEE
No reproduction or networking permitted without license from IHS
Not for Resale

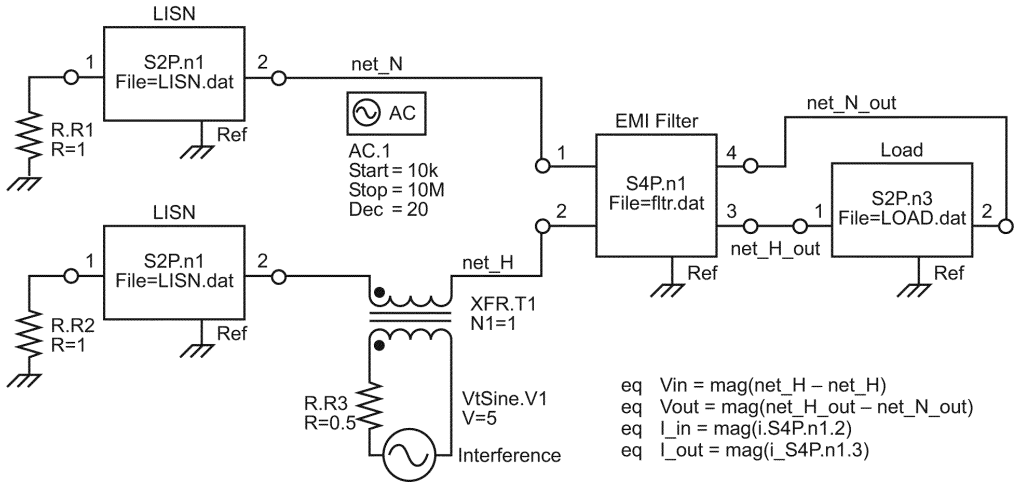

Figure D.9—Example simulation with S-parameters for differential-mode interference

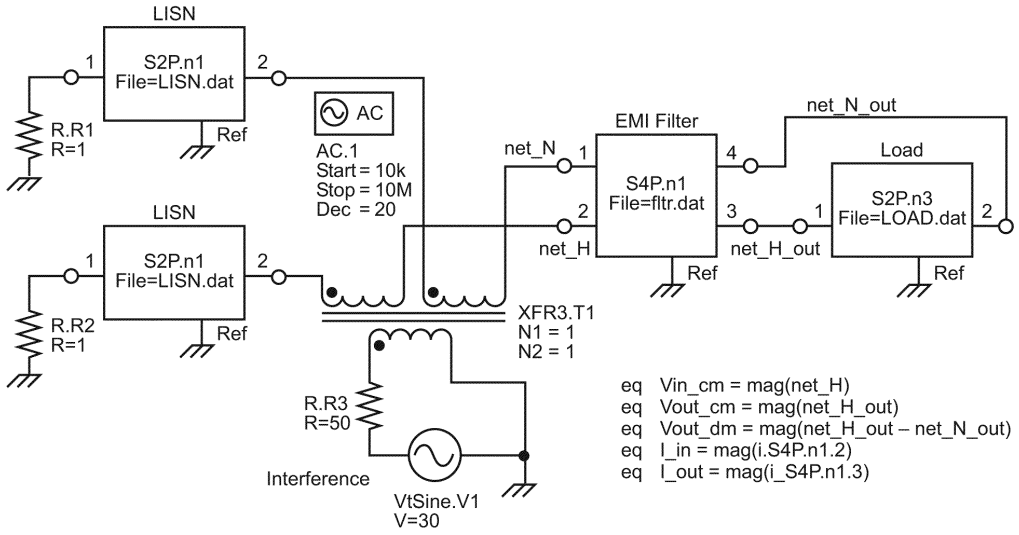

Figure D.10—Example simulation with S-parameters for common-mode interference

Copyright © 2006 IEEE. All rights reserved.

Copyright The Institute of Electrical and Electronics Engineers, Inc.
Provided by IHS under license with IEEE
No reproduction or networking permitted without license from IHS
Not for Resale

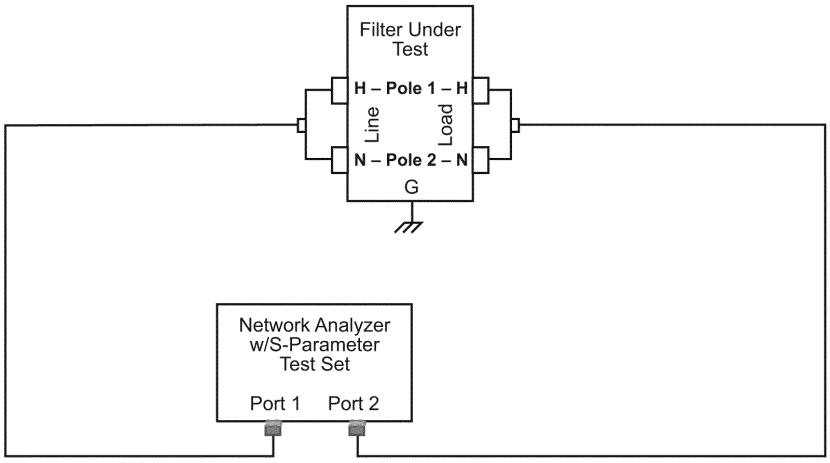

Figure D.11—Common-mode S-parameter measurement

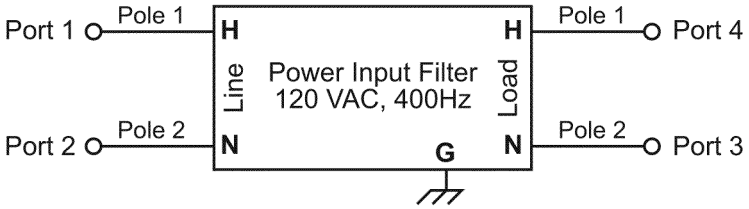

Figure D.12—Example filter port assignment

D.3 Characterization procedure

S-parameter characterization of EMI filters shall be performed using a calibrated network analyzer with an attached or integral S-parameter test set. In addition to plot or tables of the S-parameters, and the statement of measurement uncertainty and other items required by this standard, the characterization data shall include the items listed in Table D.2. Table D.3 shows the process for determining port relationships for measurement set-up numbers for a 2-pole EMI filter.

Table D.2—Example of characterization data

Item	Example
Date of characterization	August 9, 2002
Filter manufacturer, make, and model	ABC Filter Co., EMI Remover, model 120-10-400-1p
Filter serial number	453A980
Filter description	120 V ac, 10 A, 400 Hz, 1-phase power input filter
Filter port designation diagram	See Figure D.11.
Frequency range of characterization	10 kHz to 30 MHz
Frequency sweep type (linear or logarithmic)	Log
Step size, points per decade, or total points	20 points per decade

Copyright © 2006 IEEE. All rights reserved.
Copyright The Institute of Electrical and Electronics Engineers, Inc.
Provided by IHS under license with IEEE
No reproduction or networking permitted without license from IHS
Not for Resale

Table D.2—Example of characterization data *(continued)*

Item	Example
Type of measurement (basic or common mode)	Basic
Bias conditions	Measurement #1: No bias Measurement #2: 170 V dc @ 10 A
Base reference impedance	50 ohms
Data file format	Frequency |S11| ∠S11 |S12| ∠S12 |S13| ∠S13 |S14| ∠S14 Frequency |S21| ∠S21 |S22| ∠S22 |S23| ∠S23 |S24| ∠S24 Frequency |S31| ∠S31 |S32| ∠S32 |S33| ∠S33 |S34| ∠S34 Frequency |S41| ∠S41 |S42| ∠S42 |S43| ∠S43 |S44| ∠S44 Frequency in kHz, |Sxy| in dB, ∠ in degrees
Data file	453A980_1.dat for Measurement #1 453A980_2.dat for Measurement #2

Table D.3—S-parameter data for a 4-port network

Measurement setup number	Filter under test port conditions		Results
	Network analyzer—port 1	Network analyzer—port 2	
1	1	2	S11 S21 S12 S22
2	1	3	S11 S31 S13 S33
3	1	4	S11 S41 S14 S44
4	2	3	S22 S32 S23 S33
5	2	4	S22 S42 S24 S44
6	3	4	S33 S43 S34 S44

NOTE—Both amplitude and phase must be measured. Ports not connected to the network analyzer shall be terminated, line-to-ground, with Z_o ohms.

Copyright © 2006 IEEE. All rights reserved.

Copyright The Institute of Electrical and Electronics Engineers, Inc.
Provided by IHS under license with IEEE
No reproduction or networking permitted without license from IHS
Not for Resale

Annex E

(informative)

Line-impedance stabilization networks

E.1 Introduction

LISNs are simply passive networks of resistors, capacitors, and in general, a single series inductor, all of which are configured as a pi filter arrangement. LISNs are typically used in EMI characteristic measurements to present a predictable value of impedance as a function of frequency to the device under test. This characteristic is very important for establishing reproducibility in measurements that may be performed either over time or by differing measurement organizations. Ideally, a LISN would be capable of presenting an impedance value whose magnitude was constant over the frequency range of interest, but this is not realizable in a practical sense with a simple network. A LISN also acts to block undesirable conducted electrical noise from polluting the measurement process, ensuring that the data collected are that produced by the device under test.

For the purposes of EMI filter characterization, a LISN provides a predictable, repeatable impedance characteristic to the filter under test. Under ideal conditions, that impedance characteristic will approximate that of the power source intended for interface with the filter in application.

E.2 LISN configurations

LISNs have been around for many years in the EMI community and can be found in many configurations. MIL-STD-461E-1999 [B15], CISPR, and the FCC each offer their own versions of LISN, as does NASA for some of its applications. Four such configurations are shown in this annex. These four configurations, shown in Figure E.1, Figure E.2, Figure E.3, and Figure E.4 are similar to one another in design and offer similar capabilities in terms of impedance presented to the device under test. Each of the four configurations differ from the other three greatly in their characteristics below 100 kHz, but because they are intended for use above that frequency, this is of no concern for this standard.

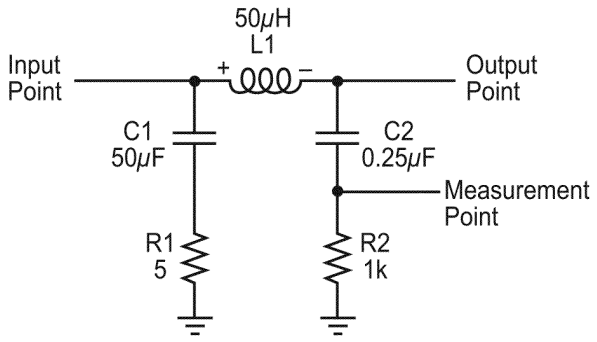

Figure E.1—Example LISN shown in 7.10

Copyright © 2006 IEEE. All rights reserved.
Copyright The Institute of Electrical and Electronics Engineers, Inc.
Provided by IHS under license with IEEE
No reproduction or networking permitted without license from IHS
Not for Resale

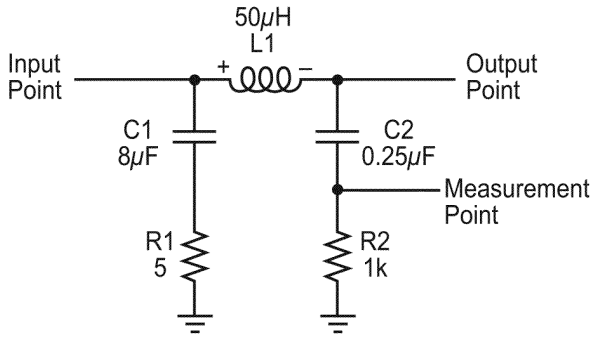

Figure E.2— Example of a MIL-STD-461E LISN

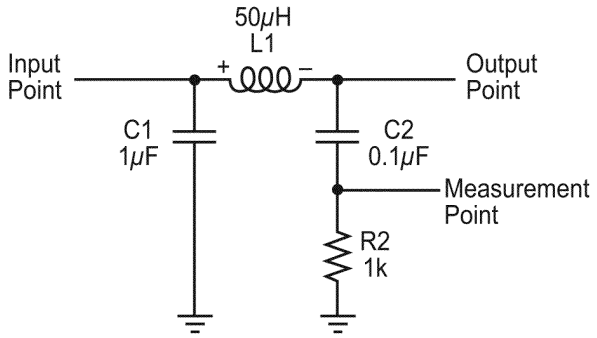

Figure E.3—Example of an FCC LISN

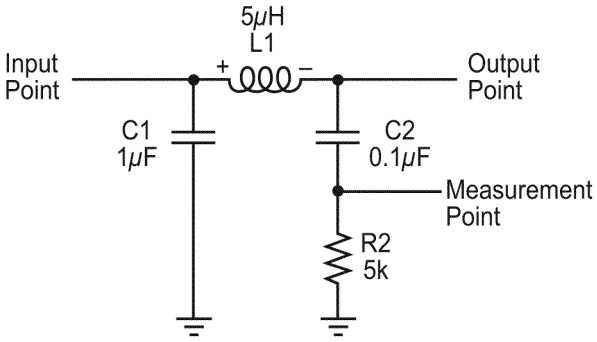

Figure E.4—Example of a Nicholson/Malack LISN

Copyright © 2006 IEEE. All rights reserved.

Copyright The Institute of Electrical and Electronics Engineers, Inc.
Provided by IHS under license with IEEE
No reproduction or networking permitted without license from IHS
Not for Resale

E.3 Considerations for LISN implementation

All of these LISNs are simple pi filter arrangements, as opposed to the more complex design used for CISPR testing. In using these LISNs, the tester should be sure to keep in mind the impedance of the intended source as a function of frequency and select a LISN that closely mimics that impedance characteristic. Theoretical LISN impedance characteristics of three of the preceding four LISNs are shown in Figure E.5.

Note the large difference between the FCC and the Nicholson/Malack LISN characteristic curves. The FCC LISN is intended for use over the frequency range of 450 kHz to 30 MHz. Examination of the FCC LISN curve above shows a nearly constant impedance characteristic that approaches asymptotically a value of 50 ohms (a result of the terminating resistance of the measurement equipment attached to the LISN measurement port). The Nicholson/Malack LISN was examined and compared to the median ac mains impedance of 36 different 60 Hz sources (see Nicholson and Malack [B16]). That paper showed the 5 μH LISN to be well matched to the impedance characteristic of a "median" 60 Hz ac mains source (again a result of the terminating resistance of the measurement equipment attached to the LISN measurement port).

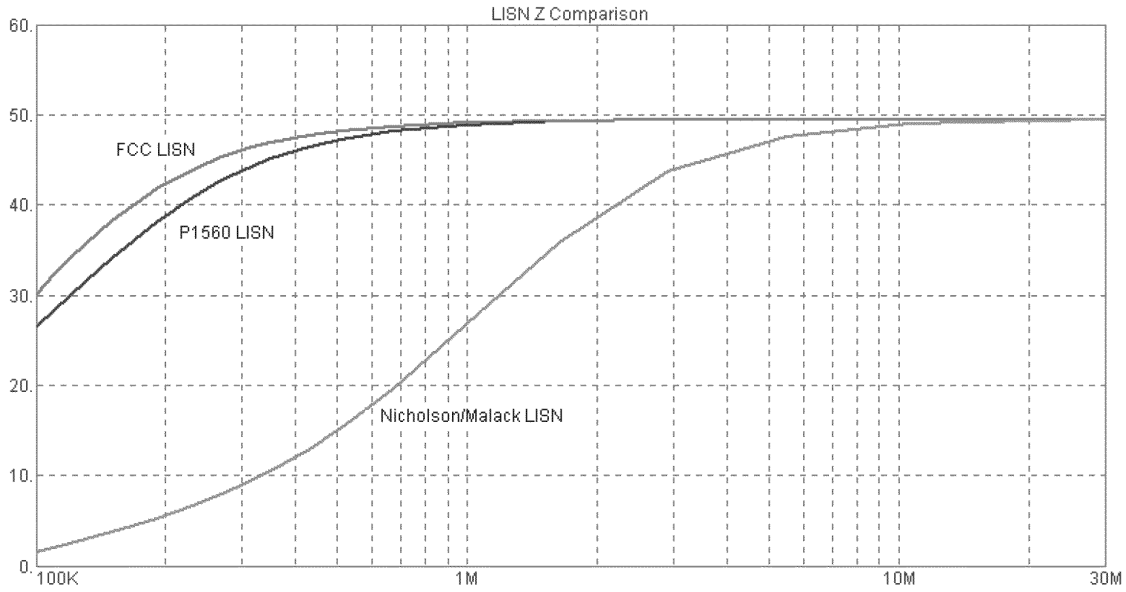

Figure E.5—Comparison of LISN impedance characteristics

Experience has shown that LISNs do vary, sometimes significantly, from their specified values of insertion loss and attenuation as a function of frequency. Whatever LISN is chosen for the measurement, it is necessary that the tester accurately measure the LISN impedance characteristic for comparison to the desired source impedance characteristic before taking data.

Another consideration is that in this application, the LISN will not be the point of measurement. Thus, it is imperative that the correct termination be chosen for the LISN measurement port, across R2. The impact to the LISN characteristic impedance of terminating resistor value is graphically illustrated in Figure E.6.

It is essential that LISNs be properly bonded to the ground plane surface of the measurement setup as shown in Figure 16 and Figure 17. This should be accomplished by direct faying surface bonding, rather than through the use of any bonding straps or jumpers. For details about the LISN impedance and insertion loss measurements, see Clause 2.

Copyright © 2006 IEEE. All rights reserved.
Copyright The Institute of Electrical and Electronics Engineers, Inc.
Provided by IHS under license with IEEE
No reproduction or networking permitted without license from IHS
Not for Resale

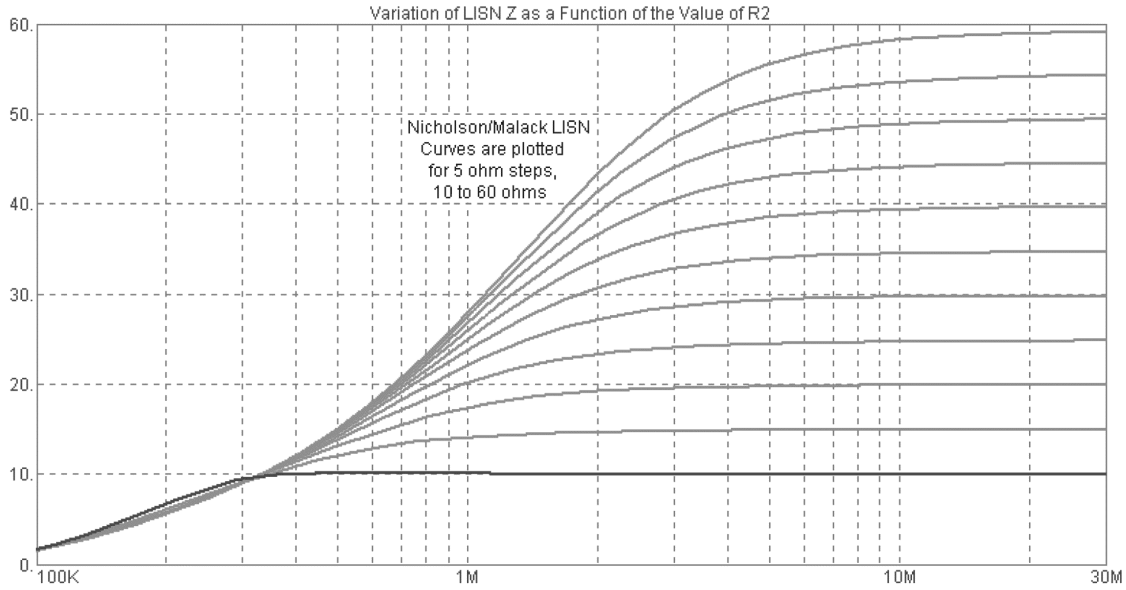

Figure E.6—Variation of LISN characteristic impedance

Copyright © 2006 IEEE. All rights reserved.

Copyright The Institute of Electrical and Electronics Engineers, Inc.
Provided by IHS under license with IEEE
No reproduction or networking permitted without license from IHS
Not for Resale

Annex F

(informative)

Frequency response curves

F.1 Low-pass filters

Figure F.1 depicts a frequency-response curve for a low-pass filter indicating the steepness factor and its associated frequency points.

The following variables are defined:

P = power; V = voltage; and I = current

A_S = steepness factor = f_s / f_c

f_l = lower frequency point

f_s = frequency point having the minimum required stop-band attenuation

f_c = limiting frequency or cutoff of the pass band

f_{-20} = frequency point that is –20 dB below the f_c point

f_u = upper frequency point

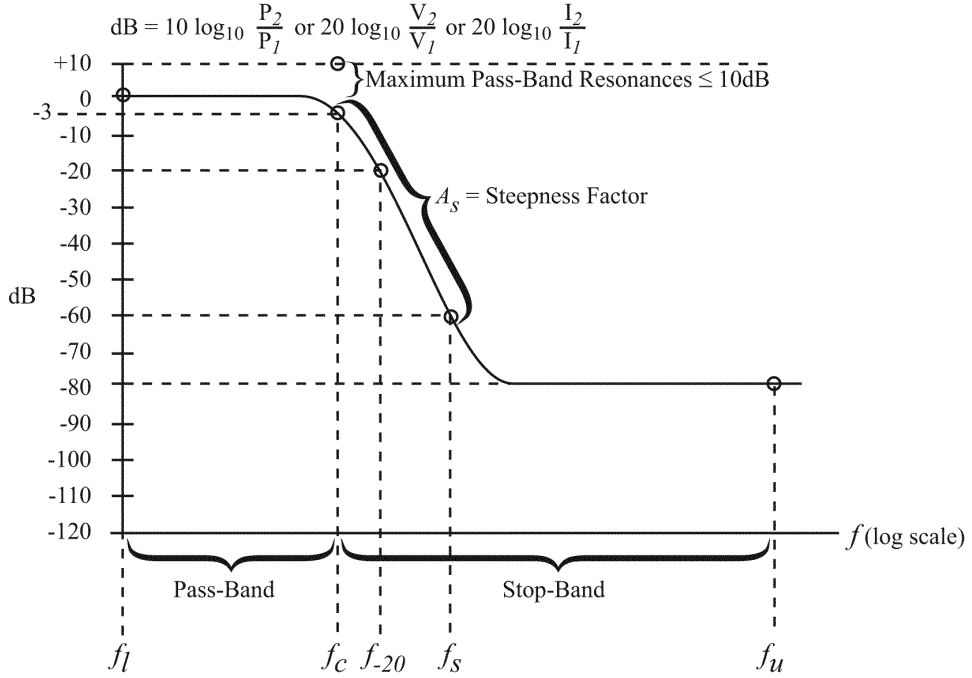

Figure F.1—Frequency-response curve for a low-pass filter

Copyright © 2006 IEEE. All rights reserved.
Copyright The Institute of Electrical and Electronics Engineers, Inc.
Provided by IHS under license with IEEE
No reproduction or networking permitted without license from IHS
Not for Resale

F.2 High-pass filters

Figure F.2 depicts a frequency response curve for a high-pass filter indicating the steepness factor and its associated frequency points.

The following variables are defined:

P = power; V = voltage; and I = current
A_S = steepness factor = f_c / f_s
f_l = lower frequency point
f_s = frequency point having the minimum required stop-band attenuation
f_c = limiting frequency or cutoff of the pass-band
f_{-20} = frequency point that is –20 dB below the f_c point
f_u = upper frequency point

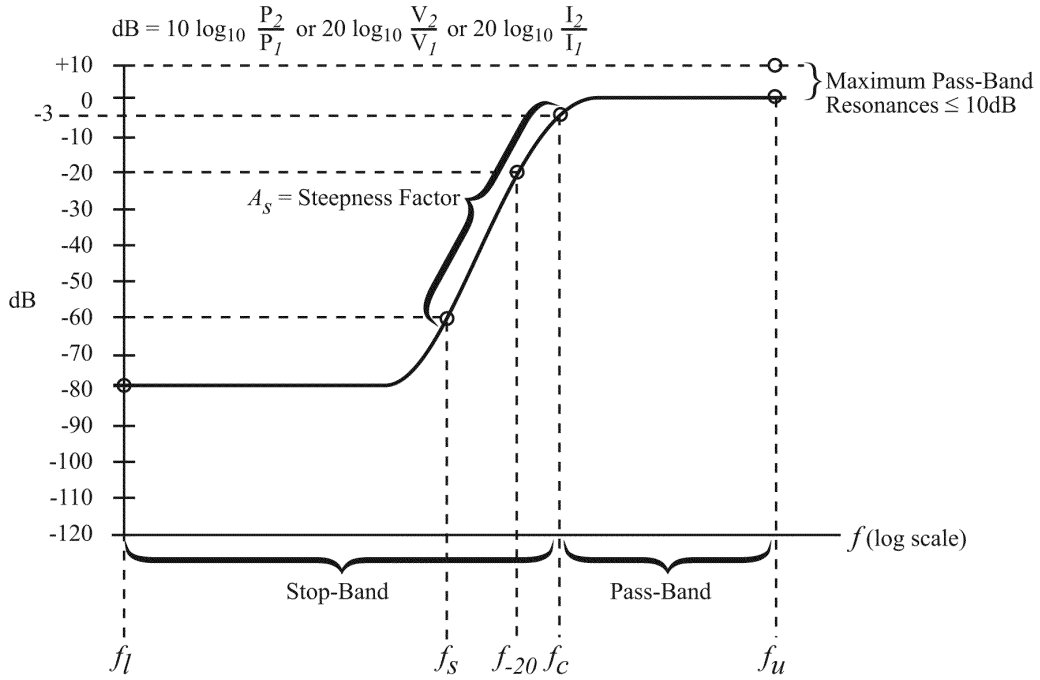

Figure F.2—Frequency-response curve for a high-pass filter

Copyright © 2006 IEEE. All rights reserved.

Copyright The Institute of Electrical and Electronics Engineers, Inc.
Provided by IHS under license with IEEE
No reproduction or networking permitted without license from IHS
Not for Resale

F.3 Band-pass filters

Figure F.3 depicts a frequency response curve for a band-pass filter indicating the steepness factor and its associated frequency points.

The following variables are defined:

P = power; V = voltage; and I = current

A_S = steepness factor = stop-band bandwidth/pass-band bandwidth

A_{S_1} = first steepness factor = f_{s_1}/f_{c_1}

f_{s_1} = first frequency point having the minimum required stop-band attenuation

f_{c_1} = first limiting frequency or cutoff of the pass band

f_{-20_1} = first frequency point that is –20 dB below the f_{c_1} point

A_{S_2} = second steepness factor = f_{c_2}/f_{s_2}

f_{s_2} = second frequency point having the minimum required stop-band attenuation

f_{c_2} = second limiting frequency or cutoff of the pass-band

f_{-20_2} = second frequency point that is –20 dB below the f_{c_2} point

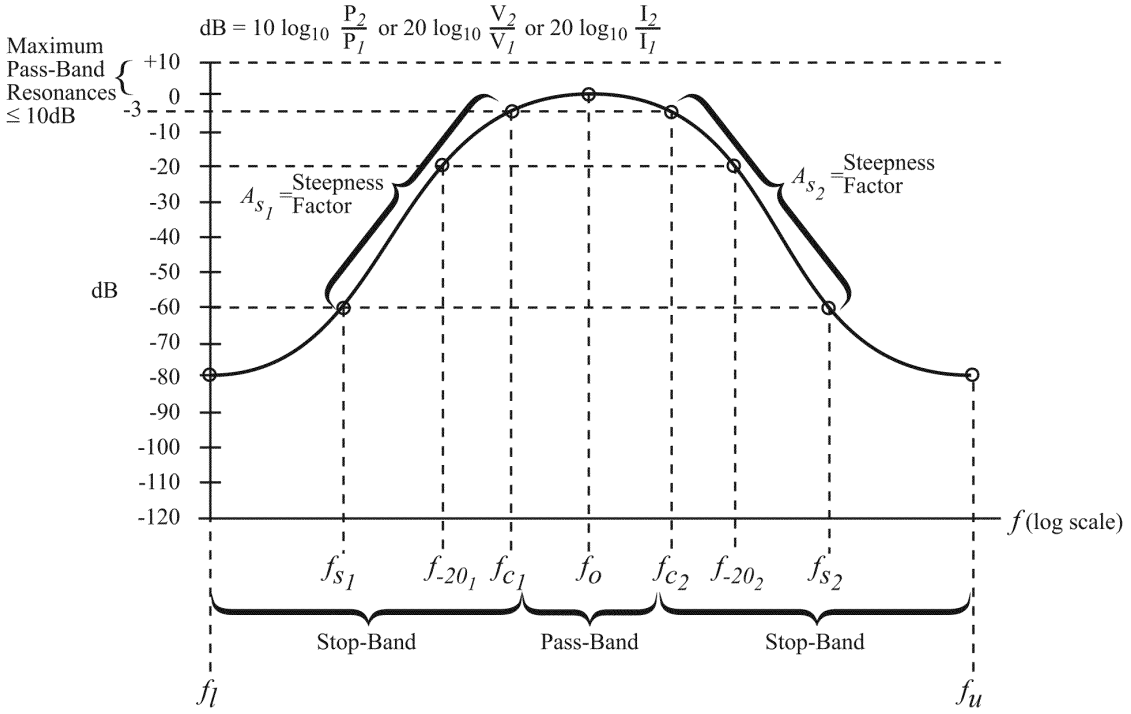

Figure F.3—Frequency response curve for a band-pass filter

Copyright © 2006 IEEE. All rights reserved.
Copyright The Institute of Electrical and Electronics Engineers, Inc.
Provided by IHS under license with IEEE
No reproduction or networking permitted without license from IHS
Not for Resale

F.4 Band-reject filters

Figure F.4 depicts a frequency response curve for a band-reject filter indicating the steepness factor and its associated frequency points.

The following variables are defined:

P = power; V = voltage; and I = current

A_S = steepness factor = pass-band bandwidth/stop-band bandwidth

A_{S_1} = first steepness factor = f_{c_1}/f_{s_1}

f_{s_1} = first frequency point having the minimum required stop-band attenuation

f_{c_1} = first limiting frequency or cutoff of the pass band

f_{-20_1} = first frequency point that is –20 dB below the f_{c_1} point

A_{S_2} = second steepness factor = f_{s_2}/f_{c_2}

f_{s_2} = second frequency point having the minimum required stop-band attenuation

f_{c_2} = second limiting frequency or cutoff of the pass band

f_{-20_2} = second frequency point that is –20 dB below the f_{s_2} point

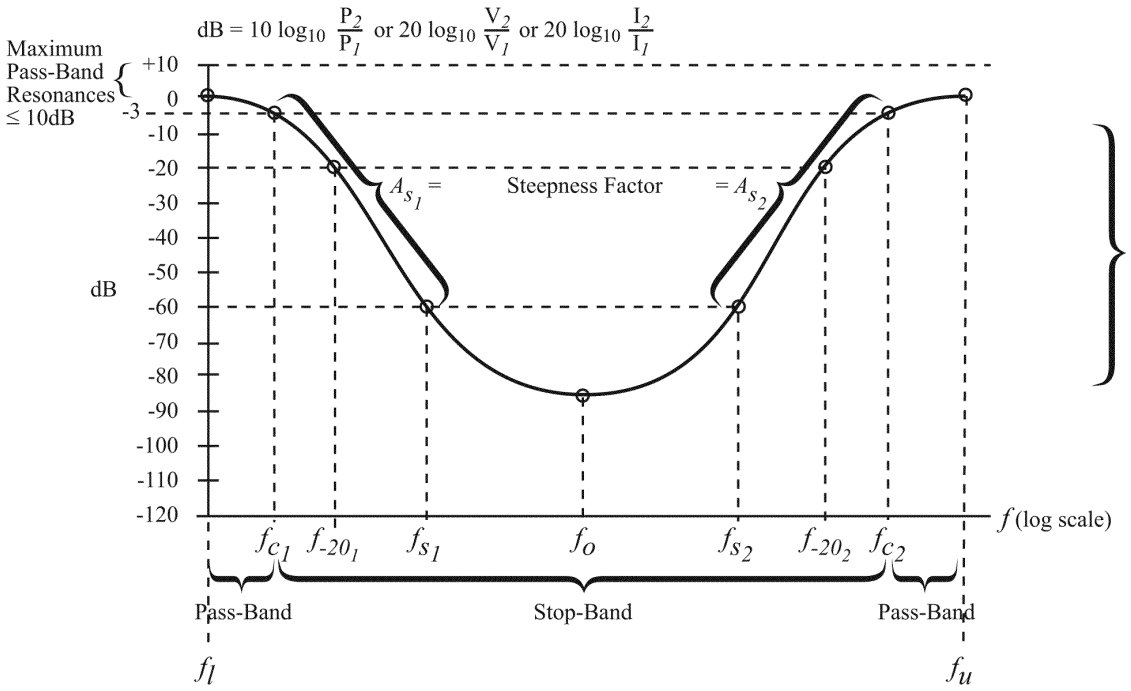

Figure F.4—Frequency-response curve for a band-reject filter

Copyright © 2006 IEEE. All rights reserved.

Copyright The Institute of Electrical and Electronics Engineers, Inc.
Provided by IHS under license with IEEE
No reproduction or networking permitted without license from IHS
Not for Resale

Annex G

(informative)

Designing RFI filters for their worst-case behavior

G.1 Introduction

In its most general form, the problem of the determination of the worst-case behavior of a passive RFI filter can be stated as: What is the worst performance that can be expected from the filter when its terminations are not well defined? This question is particularly relevant for a power-line filter.

Because this annex is restricted to RFI filters intended for connection to the power mains, the worst performance is implicitly the smaller reduction of amplitude in the stop band.

This annex introduces various improvements to the theory of the worst-case behavior models of filters, related to definitions, calculation, and measurement techniques. However, it is limited to 2-port frequency interference filters regarded as linear, connected to linear sources and loads. This annex is an adaptation of a conference paper (see Broydé and Clavelier [B2]).

G.2 Relevance of worst-case concepts

Throughout this annex, the definitions shown in Figure G.1 will apply:

a) For the complex rms voltages V_S, V_L, and V_{MIN}
b) For the complex rms currents I_S, I_L, and I_{WF}
c) For the mean powers P_S, P_L, P_{WF}, and P_{MAX}

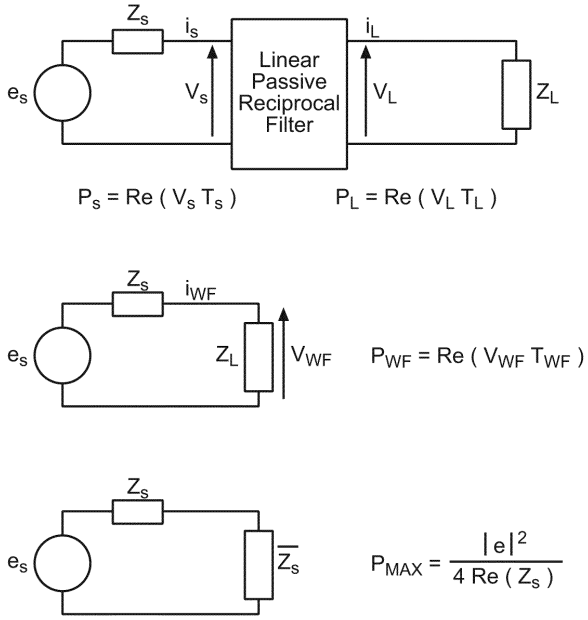

Figure G.1—Definition for voltages, currents, and powers

--`,,```,,,,````-`-`,,`,,`,`,,`---
Copyright © 2006 IEEE. All rights reserved.
Copyright The Institute of Electrical and Electronics Engineers, Inc.
Provided by IHS under license with IEEE
No reproduction or networking permitted without license from IHS
Not for Resale

Where S stands for "source," L stands for "load," and WF stands for "without filter"; where complex amplitudes have been used, where Re(z) and Im(z) are respectively the real part and the imaginary part of a complex number, where a barred variable represents the complex conjugate of the variable. In Figure G.1, e_s and Z_s are therefore respectively the electromotive force and the impedance of the source, and Z_L is the impedance of the load. See Table G.1.

A summary of existing definitions is presented in Table G.2, namely for the "basic" quantities and their nine non-trivial worst-case counterparts I_o, I_I, I_{min}, A_o, A_i, M, β_o, α_{Vmin}, α_{Imin}.

Table G.1 also gives their most important properties, with the convention that the exponent "inv" always refers to the characteristic of the filter when its input and output ports are exchanged. More explanations can be found in Broydé and Clavelier [B3].

The most commonly asked question about the basic and worst-case quantities is: Which one should be chosen for a specific application? This very sensible question requires careful thinking. First, the likelihood that a given disturbance produces an interference increases with its power or energy, in most cases. The voltage and current it produces on the susceptor will depend on the coupling path, on impedances, resonances, etc., and it is not easy to say anything about disturbance voltage and current values if the coupling mechanism itself is not completely specified. The power or energy, however, will be necessarily smaller on the susceptor than on the source, once (passive) coupling has taken place. When a standard for emission says that the emission should not exceed the emission limit of 56 dBmV quasi-peak on a 50-ohm load, at a given frequency, what is really meant is that the emission should not exceed 39 dBpW, whatever the load. If the designer of a system tries to achieve compatibility, not only compliance to existing standards, the designer should in many cases formulate design limits in terms of power. Let us now review some examples.

Case 1: Around 4 MHz, a device of unknown impedance had its emission measured with a 50-ohm network analyzer and AMN. The measured values was 64 dBmV. The desired output should never exceed 39 dBpW, whatever the load impedance. What is the filter specification at that frequency?

Answer: The solution to this problem is not known, because the available power from the source, nor the maximum voltage or current it may produce, cannot be assessed.

Case 2: The device of case 1 had its dynamic impedance measured as $Z_S \approx 8\ \Omega + j\ 1000\ \Omega$. How should the filter be specified?

Answer: The available power from the source can be computed as $P_{MAX} = 75$ dBpW, and the specification of the filter is therefore a total attenuation in the worst case at the output such that $A_o\ (8\ \Omega + j\ 1000\ \Omega) \geq 36$ dB at 4 MHz.

Case 3: The device of case 1 was investigated, and we made sure that its emission will not exceed $P_{MAX} = 75$ dBpW. However, we know that its structure and installation will differ from one site to the other and that the impedance seen by the filter around 4 MHz cannot be predicted. Can one still specify the filter?

Answer: The specification of the filter should be a minimum attenuation such that $M \geq 36$ dB at 4 MHz.

Copyright © 2006 IEEE. All rights reserved.

Copyright The Institute of Electrical and Electronics Engineers, Inc.
Provided by IHS under license with IEEE
No reproduction or networking permitted without license from IHS
Not for Resale

Table G.1—Definitions of basic characteristics of filters and their associated worst-case quantities

Known impedance			Worse case		
Variable	**Definition**	**Elementary properties**	**At the input**	**At the output**	**At the input and output**
Insertion loss	$I = \left(\frac{P_{WF}}{P_L}\right)^{\frac{1}{2}} = \left\lvert\frac{V_{WF}}{V_L}\right\rvert$	$I(Z_S,Z_L) = \left\lvert\frac{i_{WF}}{i_L}\right\rvert = I^{inv}(Z_L,Z_S)$	$I_i(Z_L)$	$I_o(Z_S) = I_i^{inv}(Z_S)$	I_{min}
Total attenuation	$A = \left(\frac{P_{MAX}}{P_L}\right)^{\frac{1}{2}}$	$A(Z_S,Z_L) = A^{inv}(Z_L,Z_S)$ $A \geq I$	$A_i(Z_L) = A_o^{inv}(Z_L)$ $\lambda(Z_L)$	$A_o(Z_S) = \lambda^{inv}(Z_S)$	M
Absorption attenuation	$\lambda = \left(\frac{P_S}{P_L}\right)^{\frac{1}{2}}$	$A(Z_S,Z_L) \geq \lambda(Z_L) \geq 1$	$\lambda(Z_L)$	M	M
Mismatched attenuation	$\beta = \left(\frac{P_{MAX}}{P_S}\right)^{\frac{1}{2}}$	$A = \lambda \bullet \beta$ $A \geq \beta \geq 1$	1	$\beta_o(Z_L)$	I
Voltage attenuation	$\alpha_V = \left\lvert\frac{V_S}{V_L}\right\rvert$	$\alpha_V(Z_L) = I(0,Z_S)$	$\alpha_V(Z_L)$	$\alpha_{V_{min}}$	$\alpha_{V_{min}}$
Current attenuation	$\alpha_L = \left\lvert\frac{i_S}{i_L}\right\rvert$	$\alpha_I(Z_L) = I(\infty,Z_S)$	$\alpha_I(Z_L)$	$\alpha_{I_{min}}$	$\alpha_{I_{min}}$

Copyright © 2006 IEEE. All rights reserved.
Copyright The Institute of Electrical and Electronics Engineers, Inc.
Provided by IHS under license with IEEE
No reproduction or networking permitted without license from IHS
Not for Resale

Table G.2—Definition of variables

Variable name	Variable nomenclature
Insertion loss	I
Total attenuation	A
Absorption attenuation	λ
Mismatch attenuation	β
Voltage attenuation	α_V
Current attenuation	α_I

Three facts for the worst-case specification of a filter:

1) Insertion loss in the worst case should not be used in most cases because it tells you about the minimum improvement that the filter is going to bring you, but it gives you no idea of the worst-case value of output voltage or power. This is different from the specification between known impedances, where specifying the insertion loss or the total attenuation is equivalent.

2) The minimum voltage and current attenuation are of interest only in very special cases of specification.

3) When one "translates" specification on voltages or currents, as they can be found in many standards, into specifications on powers, and then into worst-case specifications, care should be taken that limits given in many procedures may incorporate some kind of margin that is supposed to take into account possible mismatch in the voltage/available power conversion, or worst-case effect. Such margin should eventually be removed before defining the worst-case specification.

G.3 Impedance domains

The concept of impedance domain is very useful in the study of worst case. An impedance domain is a set of impedance values, which in this annex will always be a subset of the positive real part half complex plane Z_C^+ (i.e., we will only consider impedances with a positive resistance). An impedance domain will also have the topological property of being simply connected, which means that its boundary is only one regular curve. In the particular case of a bounded impedance domain, the curve is therefore closed. Figure G.2 shows such a bounded impedance domain.

The concept of impedance domain is useful in the study of worst-case because it allows a simple formulation of what we know and don't know about impedance. If nothing is known about a given impedance, for instance, the impedance of a power outlet at 30 MHz, then it may take on any value within the positive real part half complex plane, and it is described by an impedance domain equal to Z_C^+. If instead of considering a power outlet, we want to represent what we know of the impedance of an AMN, which is supposedly well-defined, we may eventually describe this impedance with an impedance domain equal to a disk of radius 10 O and center 50 O, or if we measured accurately this value, we may described it with the single value 54 O – j 8 O.

Copyright © 2006 IEEE. All rights reserved.

Copyright The Institute of Electrical and Electronics Engineers, Inc.
Provided by IHS under license with IEEE
No reproduction or networking permitted without license from IHS
Not for Resale

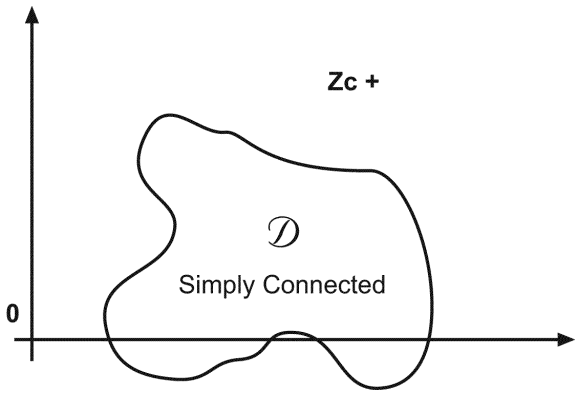

Figure G.2—An example of impedance domain

A very interesting kind of impedance domain is the input impedance domain (IID) of a linear filter, which is the subset of Z_C^+, containing all the values of impedances that the input of a linear filter may take, when the output is allowed to be connected to any impedance with a positive real part. If D(f) is the IID of a linear filter, it is therefore defined as shown in Equation (G.1):

$$D(f) = \{Z_L'(f) | Z_L \varepsilon Z_C^+\} \quad \text{(G.1)}$$

where $Z_L'(f)$ is the input impedance of the filter at the frequency f, when the load impedance Z_L is connected at its output.

It has been proven that the IID of a linear filter can only be Z_C^+, or a half plane obtained by translating Z_C^+ in the positive real direction, or a disk. Figure G.3 shows the three types of IID, together with filters having such IIDs at a given frequency. For the "left" and "center" drawings, the IIDs extend infinitely on the right, upward, and downward.

The IID of a lossless filter is always equal to Z_C^+, and this is the reason why such filters are completely ineffective in the worst case. As an example, the IID of two LISNs, illustrated in Figure G.4 and also refereed to as AMNs, were computed. As an example, two usual LISNs are shown in Figure G.4.

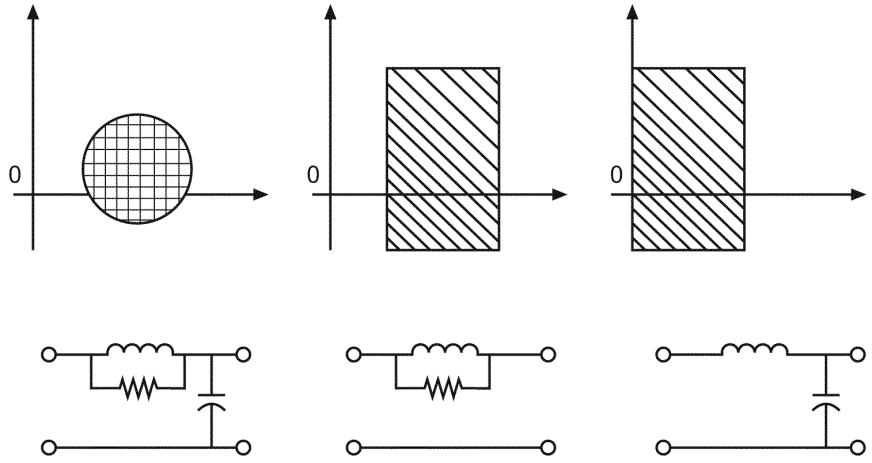

Figure G.3—Impedance domain equal to the IID of a linear filter

Copyright © 2006 IEEE. All rights reserved.
Copyright The Institute of Electrical and Electronics Engineers, Inc.
Provided by IHS under license with IEEE
No reproduction or networking permitted without license from IHS
Not for Resale

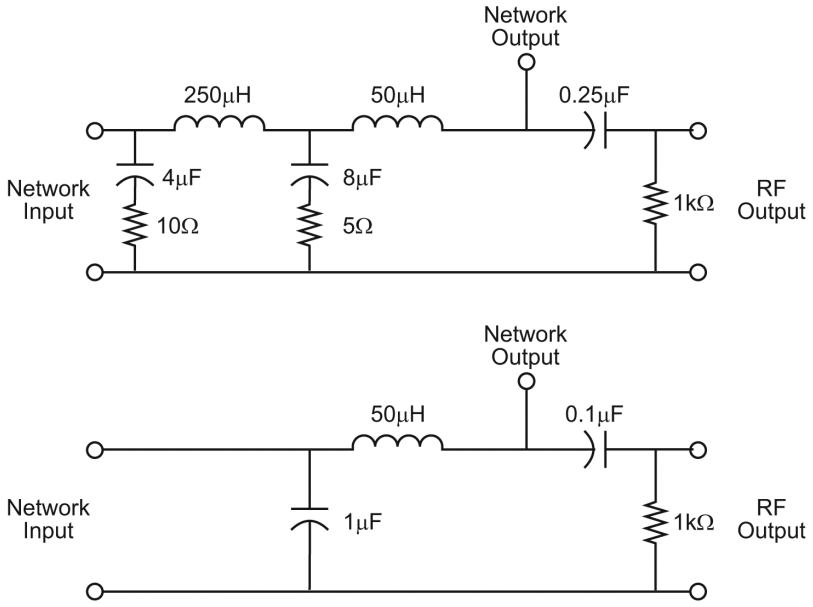

Figure G.4—Two commonly used AMNs

The IID of the AMN of the top and bottom of Figure G.4 are respectively shown on Figure G.5 and Figure G.6. As can be seen on Figure G.5, the AMN of Figure G.4 (top) matches the AMN specification whatever the impedance of the mains network. On the contrary, the AMN of Figure G.4 (bottom) is only damped by the impedance of the measuring apparatus, and it shows a very inadequate IID. This means that this AMN cannot be used on a mains network of unknown or uncontrolled impedance.

The preceding impedance domains are the result of calculations. It is also possible to use a large number of measured impedances to build an impedance domain on a statistical basis. Unfortunately, up to now too few data are available on this aspect. Figure G.7 shows the sketch of a frequency-dependent impedance domain that may be used for the design of filters to be inserted on the low-voltage public network in residential areas, in the 10 kHz to 30 MHz frequency range. The figure shows only the boundary of impedance domains at three discrete frequencies, but a table of impedance domains versus frequency may be produced, in which impedance domains boundaries are either circles or ellipses, and interpolation is possible between tabulated frequencies. The data used to produce Figure G.7 are contained in Malack and Engstrom [B12], Nicholson and Malack [B16], Schlicke [B18], and Vines et al. [B19].

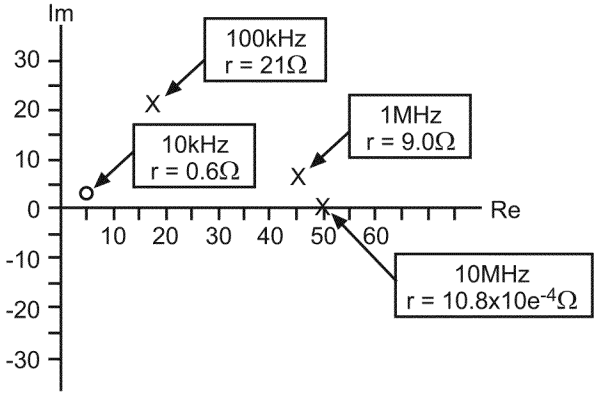

Figure G.5—IID of the AMN of the top of Figure G.4

Copyright © 2006 IEEE. All rights reserved.

Copyright The Institute of Electrical and Electronics Engineers, Inc.
Provided by IHS under license with IEEE
No reproduction or networking permitted without license from IHS
Not for Resale

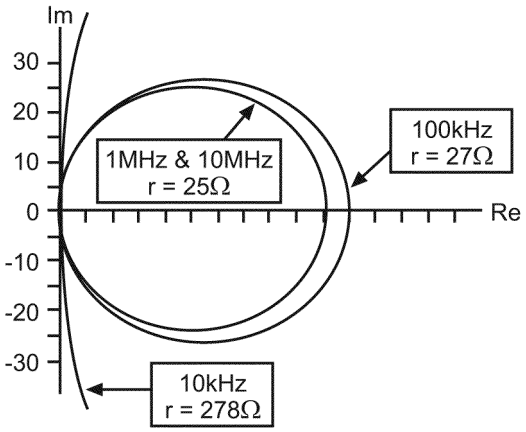

Figure G.6—IID of the AMN of the bottom of Figure G.4

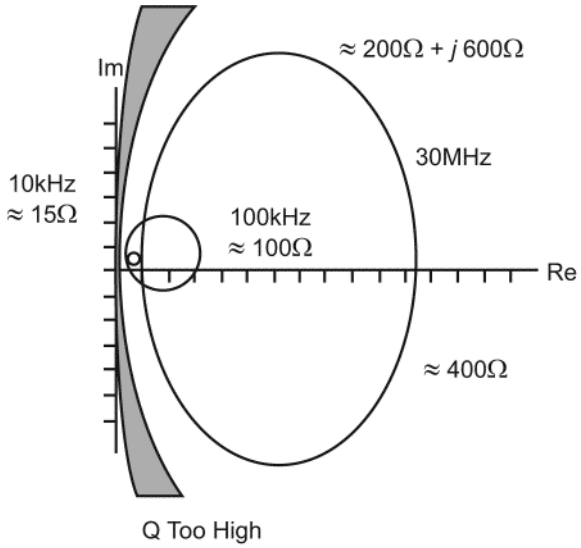

Figure G.7—A frequency-dependent impedance domain for low-voltage power network in residential areas

G.4 Worst-case in a specified impedance domain

Specifying an RFI filter designed for connections to the power mains with a total attenuation in a 50-ohm source and 50-ohm load measurement system is optimistic, because the filter performances will be completely different (far worse usually) when the filter is connected to a mains network.

On the other hand, it has been stated that designing a filter for worst-case performances is excessively pessimistic, because some values of impedance taken into account are not likely to occur on a power network: excessively high- or low-impedance values, or values with an unrealistic Q factor. The filter must then be strongly damped, and its cost increases.

The purpose of defining a worst case in a specified impedance domain is to consider impedances taking on any values in a (frequency-dependent) impedance domain, instead of Z_C^+.

Copyright © 2006 IEEE. All rights reserved.
Copyright The Institute of Electrical and Electronics Engineers, Inc.
Provided by IHS under license with IEEE
No reproduction or networking permitted without license from IHS
Not for Resale

For a quantity X dependent on Z_L, but not on Z_S (for instance, X is either λ, or α_V, or α_I), we define the minimum X in the load impedance domain D as show in Equation (G.2):

$$X_{min}^{D} = Inf\{X(ZL)|ZL \varepsilon D\} \quad (G.2)$$

and we call it minimum X in the impedance domain D.

For a quantity X dependent on both Z_L and Z_S (for instance X is either I, or A, or β), we define X in the worst case at the input in the source impedance domain D' as shown in Equation (G.3):

$$X_{i}^{D'}(Z_L) = Inf\{X(ZS,ZL)|ZS \varepsilon D'\} \quad (G.3)$$

We can also define X in the worst case at the output in the load impedance domain D as shown in Equation (G.4):

$$X_{o}^{D'}(Z_S) = Inf\{X(ZS,ZL)|ZL \varepsilon D\} \quad (G.4)$$

We can finally define X in the worst case at the input in the source impedance domain D' and at the output in the load impedance domain D as shown in Equation (G.5):

$$X_{min}^{D'D} = Inf\{X(Z_S,Z_L)|(Z_S,Z_L) \varepsilon D' \times D\} \quad (G.5)$$

All quantities in Equation (G.2), Equation (G.3), Equation (G.4), and Equation (G.5) are frequency-dependent, including the source impedance domains D and load impedance domain D'. Obviously, the preceding definitions of worst case in a specified impedance domain generalize the worst-case definitions of Table G.1. Once appropriate frequency-dependent source or load impedance domains have been selected for a given environment (for instance, according to Figure G.7), an optimal RFI filter can be designed.

Copyright © 2006 IEEE. All rights reserved.

Copyright The Institute of Electrical and Electronics Engineers, Inc.
Provided by IHS under license with IEEE
No reproduction or networking permitted without license from IHS
Not for Resale

Annex H

(informative)

Estimating measurement uncertainty

H.1 Standard uncertainty

In order to list each influence quantity that contributes to the overall measurement uncertainty, identify influence quantity as to its type, either evaluated statistically (Type A) or by another method (Type B). The Type A evaluation method may be based on any valid statistical method for treating data (see NIST TN 1297). Two examples are the method of least squares to estimate a curve and its standard deviation and finding the standard deviation of the mean of a series of independent data. The Type B method is based on all relevant information available, such as the following:

a) Previous measurement data
b) Manufacturer's specifications
c) Data provided on calibration or other reports
d) Estimates based on experience
e) Other data

H.1.1 Type A (statistical method)

The descriptive statistics of the readings (i.e., the mean value m and standard deviation s of the readings) are found by a statistical method. The standard uncertainty u is the standard deviation (standard error) of the mean. It is found by using Equation (H.1):

$$u = \frac{\sigma}{\sqrt{n}} \tag{H.1}$$

where n is the number of readings.

For example, if a power meter is connected to a power standard and n = 8 independent readings are taken, and the standard deviation of these readings is σ = 0.2546 dB, the standard uncertainty of the power meter readings is:

$$u = \frac{0.2546}{\sqrt{8}} = 0.90 \text{ dB}$$

NOTE—If the mean value μ read on the power meter is different than the level set on the power standard, the difference is a bias or systematic effect. The measured data using the power meter should be corrected by the amount of this bias.

H.1.2 Type B (other methods)

This approach requires the identification of all relevant uncertainty components and an estimate of their magnitude. Furthermore, a suitable probability distribution function is to be selected in order to "normalize" each contributing factor to a standard deviation. The standard deviations of all normalized uncertainty components, called *expanded uncertainties,* are then combined to determine the combined standard

--`,,```,,,,````-`-`,,`,,`,`,,`---
Copyright © 2006 IEEE. All rights reserved.
Copyright The Institute of Electrical and Electronics Engineers, Inc.
Provided by IHS under license with IEEE
No reproduction or networking permitted without license from IHS
Not for Resale

uncertainty. A coverage factor is applied to expand the standard uncertainty to a confidence level (for example, k = 2 for a confidence interval of approximately 95%).

Any measurement uncertainty analysis is based on a set of assumptions. These are to be defined and documented. If the actual measurement scenario deviates from these assumptions, the uncertainty estimate will not be valid and will have to be recalculated to address the deviation.

H.2 Reporting uncertainty

The proper way to report measurement uncertainty in a test report is the inclusion of a statement of the expanded uncertainty and the k-factor, along with the confidence interval. For example:

U = 0.25 dB, k = 2 (confidence interval 95%)

H.3 Measurement uncertainty calculation example

The uncertainty analysis in Table H.1 demonstrates the application of the *ISO Guide to the Expression of Uncertainty in Measurement (GUM)* [B8] approach to a measurement method defined in 10.1. It is assumed that a Type B analysis is to be performed, which requires the identification of all relevant influence factors and an estimate of their magnitude. In case of measuring a significant number of filters, as may be the case in a production environment, the measurement uncertainty analysis could also be based on a Type A method. In either case, the determination of the magnitude of the measurement repeatability is based on a Type A analysis, where the measurand (i.e., the insertion loss of the filter) is determined repeatedly in a series of measurements.

Table H.1—Calibration uncertainty of test setup described in 10.1

Source of uncertainty	Value (dB)	Probability distribution	Divisor	Sensitivity coefficient	Expanded uncertainty k_p
Spectrum analyzer					
Display scale fidelity	1.15	Rectangular	1.732	1	0.663972286
Cabling for reference measurement					
Mismatch switch—reference cable	0.038	U-shaped	1.414	1	0.026874116
Mismatch reference cable—switch	0.038	U-shaped	1.414	1	0.026874116
Insertion loss difference	0.2	Normal	1	1	0.2
Cabling for equipment under test (EUT) measurement					
Mismatch cable—EUT	0.38	U-shaped	1.414	1	0.26874116
Mismatch EUT—cable	0.38	U-shaped	1.414	1	0.26874116

Copyright © 2006 IEEE. All rights reserved.

Copyright The Institute of Electrical and Electronics Engineers, Inc.
Provided by IHS under license with IEEE
No reproduction or networking permitted without license from IHS
Not for Resale

Table H.1—Calibration uncertainty of test setup described in 10.1 *(continued)*

Source of uncertainty	Value (dB)	Probability distribution	Divisor	Sensitivity coefficient	Expanded uncertainty k_p
Test system					
System repeatability	1.0	Normal	1	1	1.0
Combined standard uncertainty (U)	—	—	—	—	1.275440024
Expanded uncertainty (k_p) for k = 2	—	—	—	—	2.550880048

Under the assumptions documented in H.3.1, the expanded uncertainty for the filter insertion loss measurement, common-mode, no-load case, is ±2.55 dB.

H.3.1 Assumptions

The following assumptions were made to determine the measurement uncertainty for the insertion loss measurement for a common-mode no-load setup:

a) The frequency range of interest for this measurement is assumed to be 10 kHz to 1 GHz.

b) The measurement setup is implemented in accordance with Figure 8 of this standard.

c) The measurement procedure outlined in 10.1.5 is followed closely. Furthermore, the relevant supplemental test procedure requirements, called out in MIL-STD-220B, clause 5, are met.

d) A verification of the suitability of the test setup, in accordance with MIL-STD-220B, subclause 4.1, is performed before the actual insertion loss measurement commences. This verification measurement will demonstrate that the test setup is suitable to measure a constant value of insertion loss within ±1.0 dB over the required frequency range, when the standard attenuator (see subclause 4.2.6 in MIL-STD-220B) is measured.

e) The test system (i.e., signal generator and receiver) are included in one test instrument. The uncertainty analysis is based on a spectrum analyzer covering the frequency range from 9 kHz to 26.5 GHz, including a tracking generator for the frequency range from 9 kHz to 3 GHz.

f) A setting of 10 dB or greater for the input attenuator of the spectrum analyzer and the output attenuator of the tracking generator is assumed. This setting is preferable to improve the match between the spectrum analyzer output and the connected cable.

g) The tracking adjust feature in the spectrum analyzer is to be used to precisely align the intermediate frequency (IF) of the spectrum analyzer with the output frequency of the tracking generator in order to avoid amplitude measurement errors.

h) Because the proximity of the system noise can influence the test results significantly, it is assumed that the IF bandwidth of the spectrum analyzer is set such that a minimum signal-to-noise ratio of 20 dB is achieved throughout the measurement. In this case, the contribution is negligible.

i) The VSWR of all cable connectors used is 1.2:1.

j) Isolation attenuators of 10 dB or more are inserted in the setup at the output of the tracking generator and the input of the spectrum analyzer (not shown in Figure 8, but mandated in MIL-STD-220B, subclause 4.2.4). Their maximum VSWR is assumed to be 1.2:1 in the frequency range of interest.

k) The maximum VSWR of the switches is assumed to be 1.1:1 in the frequency range of interest. It is also assumed that the cross talk between switch positions is negligible.

Copyright © 2006 IEEE. All rights reserved.
Copyright The Institute of Electrical and Electronics Engineers, Inc.
Provided by IHS under license with IEEE
No reproduction or networking permitted without license from IHS
Not for Resale

l) The reference measurement is to be performed using a through connector. The electrical length of the cable used to connect the isolation attenuators and its insertion loss must be as close as possible to the parameters of the cables used to connect the filter to the test system. Any deviation between those two sets of cables will introduce a systematic error. A maximum difference of a VSWR of 1.2:1 and a maximum difference in insertion loss between those sets of cables of 0.2 dB are assumed.

m) The reference level, scaling, and input attenuator settings on the spectrum analyzer is set such that both the reference and insertion loss measurements can be made and the data will be no less than 85 dB down from the set reference level. The settings will not be changed between the two measurements.

n) The output power level of the tracking generator will not be changed between the reference and insertion loss measurements.

o) The maximum input and output impedances of the filter under test were assumed to be 1 kilohm. The impedance of the filter under test can have a major impact on the test result of a insertion loss measurement.

Copyright © 2006 IEEE. All rights reserved.

Copyright The Institute of Electrical and Electronics Engineers, Inc.
Provided by IHS under license with IEEE
No reproduction or networking permitted without license from IHS
Not for Resale

Annex I

(informative)

Glossary

The following terms and definitions are used within the context of this standard.

apparent power: The product of the root-mean-square (rms) current and the rms voltage.

attenuation: A general term used to denote a decrease in signal magnitude during transmission from one point to another. Attenuation may be expressed as a scalar ratio of the input magnitude to the output magnitude or in decibels.

bulkhead mounting: Installation in which the metallic case of the filter is bolted directly to a metallic bulkhead that is at reference or ground potential.

common-mode interference: Interference that appears between both signal leads and a common reference plane (ground) and causes the potential of both sides of the transmission path to be changed simultaneously and by the same amount relative to the common reference plane (ground).

crest factor: The ratio of the peak value to the rms value of an ac waveform measured under steady-state conditions. It is unit-less, and the ratio for a pure sine wave is equal to the square root of two.

design tests: Tests made by the manufacturer to determine the adequacy of the design of a particular type, style, or model of equipment or its component parts to meet its assigned ratings and to operate satisfactorily under normal service conditions or under special conditions if specified and may be used to demonstrate compliance with applicable standards of the industry.

dielectric withstand voltages: The maximum voltage that may be applied between line or phase terminals and the neutral or ground terminals (or the device enclosure) without causing electrical failure or breakdown of the device insulation.

differential-mode interference: Interference that causes the potential of one side of the signal transmission path to be changed relative to the other side.

NOTE—The type of interference in which the interference current path is wholly in the signal transmission path.

error (measurement as in the error of a measuring instrument): The algebraic difference between a value that results from measurement and a corresponding true value.

fault current: The current from the connected power system that flows in a short circuit.

ground plane: A conductive surface or plate used as a common reference point for circuit returns and electric or signal potentials.

impedance: A measure of the complex resistive and reactive attributes of a component in an ac circuit.

insulation resistance: The resistance, measured at a specified dc voltage, between any specified exposed conductive surface or line terminal, including ground, and one or more of the other line terminals of the device.

Copyright © 2006 IEEE. All rights reserved.
Copyright The Institute of Electrical and Electronics Engineers, Inc.
Provided by IHS under license with IEEE
No reproduction or networking permitted without license from IHS
Not for Resale

leakage current: The current flowing in the equipment-grounding conductor (including a conductive case) when the device is connected as intended to the energized power system at rated voltage.

line-impedance stabilization network (LISN): A network inserted in the supply mains lead of apparatus to be tested that provides, in a given frequency range, a specified load impedance for the measurement of disturbance voltages and which may isolate the apparatus from the supply mains in that frequency range.

NOTE—A LISN unit may contain one or more individual LISN circuits.

mixed-mode interference: Interference that consists of components from both common- and differential-mode interference.

network analyzer: A system that measures the 2-port transmission and 1-port reflection characteristics of a multiport in its linear range at a common input and output frequency.

NOTE—This includes systems that (1) measure magnitude of reflection and transmission coefficient only as well as those systems that measure magnitude and phase, (2) operate manually or automatically, (3) cover a frequency range either continuously or in small enough steps to make coverage practically continuous, and (4) vary frequency manually or automatically, stepped, or swept.

performance characteristics: The parameters that are essential to describe the behavior or applicability of the device under specified conditions of operation.

routine tests: Test made by the manufacturer on every device, or representative samples, or on parts or materials, as required, to verify that the product meets the design specifications.

spectrum analyzer: An instrument generally used to display the power distribution of an incoming signal as a function of frequency.

NOTE—Spectrum analyzers are useful in analyzing the characteristics of waveforms in general because, by repetitively sweeping through the frequency range of interest, they display all the frequency components of the signal.

standby current: The current flowing in any specific conductor (including a conductive case) when the device is connected as intended to the energized power system at rated voltage with no connected load.

volt-amperes (VA): *See:* **apparent power**.

voltage rating: The voltage specified on the nameplate.

waveform: A manifestation, representation (that is, graph, plot, oscilloscope presentation, equation(s), table of coordinate or statistical data, etc.) or a visualization of a wave, pulse, or transition.

Copyright © 2006 IEEE. All rights reserved.

Copyright The Institute of Electrical and Electronics Engineers, Inc.
Provided by IHS under license with IEEE
No reproduction or networking permitted without license from IHS
Not for Resale