

IEEE Recommended Practice for Maintenance, Testing, and Replacement of Valve-Regulated Lead- Acid (VRLA) Batteries for Stationary Applications

IEEE Power Engineering Society

Sponsored by the
Stationary Battery Committee

1188™

IEEE
3 Park Avenue
New York, NY 10016-5997, USA

8 February 2006

IEEE Std 1188™-2005
(Revision of IEEE Std 1188-1996)

Copyright The Institute of Electrical and Electronics Engineers, Inc.
Provided by IHS under license with IEEE
No reproduction or networking permitted without license from IHS

Not for Resale

and Electronics Engineers, Inc.
IEEE
nitted without license from IHS
Not for Resale

Recognized as an
American National Standard (ANSI)

IEEE Std 1188™-2005
(Revision of
IEEE Std 1188-1996)

IEEE Recommended Practice for Maintenance, Testing, and Replacement of Valve-Regulated Lead- Acid (VRLA) Batteries for Stationary Applications

Sponsor

Stationary Battery Committee
of the
IEEE Power Engineering Society

Approved 1 February 2006

American National Standards Institute

Approved 22 September 2005

IEEE-SA Standards Board

--`,,```,,,,````-`-`,,`,,`,`,,`---

Copyright The Institute of Electrical and Electronics Engineers, Inc.
Provided by IHS under license with IEEE
No reproduction or networking permitted without license from IHS

Not for Resale

Abstract: This recommended practice is limited to maintenance, test schedules, and testing procedures that can be used to optimize the life and performance of valve-regulated lead-acid (VRLA) batteries for stationary applications. It also provides guidance to determine when batteries should be replaced.
Keywords: battery acceptance test, battery capacity text, battery performance test, battery service test, valve-regulated lead-acid (VRLA) battery

The Institute of Electrical and Electronics Engineers, Inc.
3 Park Avenue, New York, NY 10016-5997, USA

Copyright © 2006 by the Institute of Electrical and Electronics Engineers, Inc.
All rights reserved. Published 8 February 2006. Printed in the United States of America.

IEEE is a registered trademark in the U.S. Patent & Trademark Office, owned by the Institute of Electrical and Electronics Engineers, Incorporated.

Print: ISBN 0-7381-4796-6 SH95370
PDF: ISBN 0-7381-4797-4 SS95370

No part of this publication may be reproduced in any form, in an electronic retrieval system or otherwise, without the prior written permission of the publisher.

Copyright The Institute of Electrical and Electronics Engineers, Inc.
Provided by IHS under license with IEEE
No reproduction or networking permitted without license from IHS
Not for Resale

IEEE Standards documents are developed within the IEEE Societies and the Standards Coordinating Committees of the IEEE Standards Association (IEEE-SA) Standards Board. The IEEE develops its standards through a consensus development process, approved by the American National Standards Institute, which brings together volunteers representing varied viewpoints and interests to achieve the final product. Volunteers are not necessarily members of the Institute and serve without compensation. While the IEEE administers the process and establishes rules to promote fairness in the consensus development process, the IEEE does not independently evaluate, test, or verify the accuracy of any of the information contained in its standards.

Use of an IEEE Standard is wholly voluntary. The IEEE disclaims liability for any personal injury, property or other damage, of any nature whatsoever, whether special, indirect, consequential, or compensatory, directly or indirectly resulting from the publication, use of, or reliance upon this, or any other IEEE Standard document.

The IEEE does not warrant or represent the accuracy or content of the material contained herein, and expressly disclaims any express or implied warranty, including any implied warranty of merchantability or fitness for a specific purpose, or that the use of the material contained herein is free from patent infringement. IEEE Standards documents are supplied "**AS IS**."

The existence of an IEEE Standard does not imply that there are no other ways to produce, test, measure, purchase, market, or provide other goods and services related to the scope of the IEEE Standard. Furthermore, the viewpoint expressed at the time a standard is approved and issued is subject to change brought about through developments in the state of the art and comments received from users of the standard. Every IEEE Standard is subjected to review at least every five years for revision or reaffirmation. When a document is more than five years old and has not been reaffirmed, it is reasonable to conclude that its contents, although still of some value, do not wholly reflect the present state of the art. Users are cautioned to check to determine that they have the latest edition of any IEEE Standard.

In publishing and making this document available, the IEEE is not suggesting or rendering professional or other services for, or on behalf of, any person or entity. Nor is the IEEE undertaking to perform any duty owed by any other person or entity to another. Any person utilizing this, and any other IEEE Standards document, should rely upon the advice of a competent professional in determining the exercise of reasonable care in any given circumstances.

Interpretations: Occasionally questions may arise regarding the meaning of portions of standards as they relate to specific applications. When the need for interpretations is brought to the attention of IEEE, the Institute will initiate action to prepare appropriate responses. Since IEEE Standards represent a consensus of concerned interests, it is important to ensure that any interpretation has also received the concurrence of a balance of interests. For this reason, IEEE and the members of its societies and Standards Coordinating Committees are not able to provide an instant response to interpretation requests except in those cases where the matter has previously received formal consideration. At lectures, symposia, seminars, or educational courses, an individual presenting information on IEEE standards shall make it clear that his or her views should be considered the personal views of that individual rather than the formal position, explanation, or interpretation of the IEEE.

Comments for revision of IEEE Standards are welcome from any interested party, regardless of membership affiliation with IEEE. Suggestions for changes in documents should be in the form of a proposed change of text, together with appropriate supporting comments. Comments on standards and requests for interpretations should be addressed to:

Secretary, IEEE-SA Standards Board

445 Hoes Lane

Piscataway, NJ 08854

USA

NOTE—Attention is called to the possibility that implementation of this standard may require use of subject matter covered by patent rights. By publication of this standard, no position is taken with respect to the existence or validity of any patent rights in connection therewith. The IEEE shall not be responsible for identifying patents for which a license may be required by an IEEE standard or for conducting inquiries into the legal validity or scope of those patents that are brought to its attention.

Authorization to photocopy portions of any individual standard for internal or personal use is granted by the Institute of Electrical and Electronics Engineers, Inc., provided that the appropriate fee is paid to Copyright Clearance Center. To arrange for payment of licensing fee, please contact Copyright Clearance Center, Customer Service, 222 Rosewood Drive, Danvers, MA 01923 USA; +1 978 750 8400. Permission to photocopy portions of any individual standard for educational classroom use can also be obtained through the Copyright Clearance Center.

--`,,```,,,,````-`-`,,`,,`,`,,`---

Copyright The Institute of Electrical and Electronics Engineers, Inc.
Provided by IHS under license with IEEE
No reproduction or networking permitted without license from IHS

Not for Resale

Introduction

This introduction is not part of IEEE Std 1188-2005, IEEE Recommended Practice for Maintenance, Testing, and Replacement of Valve-Regulated Lead-Acid (VRLA) Batteries for Stationary Applications.

Valve-regulated lead-acid (VRLA) batteries are playing an ever-increasing role in control and power systems. In many cases, VRLA batteries are being substituted for vented lead-acid batteries. Their use is also expanding into many other applications where their unique characteristics are desirable. Both gelled electrolyte and absorbed electrolyte VRLA designs, covering a range of sizes and capacities, are now available for use in many traditional and nontraditional battery applications. This recommended practice fulfills the need within the industry to provide a common or standard practice for battery maintenance, testing, and replacement of VRLA batteries for stationary applications. Alternative energy applications are not covered.

This recommended practice may be used separately, and when combined with IEEE Std 1187™, IEEE Std 1189™, and IEEE 485™, it will provide the user with a general guide to selection, sizing, designing, installing, and testing a VRLA battery installation.

Notice to users

Errata

Errata, if any, for this and all other standards can be accessed at the following URL: http://standards.ieee.org/reading/ieee/updates/errata/index.html. Users are encouraged to check this URL for errata periodically.

Interpretations

Current interpretations can be accessed at the following URL: http://standards.ieee.org/reading/ieee/interp/index.html.

Patents

Attention is called to the possibility that implementation of this standard may require use of subject matter covered by patent rights. By publication of this standard, no position is taken with respect to the existence or validity of any patent rights in connection therewith. The IEEE shall not be responsible for identifying patents or patent applications for which a license may be required to implement an IEEE standard or for conducting inquiries into the legal validity or scope of those patents that are brought to its attention.

Copyright © 2006 IEEE. All rights reserved.

--`,,```,,,,````-`-`,,`,,`,`,,`---
Copyright The Institute of Electrical and Electronics Engineers, Inc.
Provided by IHS under license with IEEE
No reproduction or networking permitted without license from IHS
Not for Resale

Participants

At the time this recommended practice was completed, the 1188 Working Group, Installation and Maintenance Subcommittee of the Stationary Battery Committee had the following membership:

William Cantor, *Chair*

Phyllis Archer	Peter Demar	Bansi Patel
Curtis Ashton	Ramesh Desai	Edward Rafter
Gary M. Balash	David O. Feder	Jan Reber
Richard T. Bolgeo	Robert Fletcher	Saba N. Saba
Thomas Carpenter	Timothy Furlong	Amiya Samanta
Jay Chamberlin	Roger D. Johnson	Robert Schmitt
M. S. (Steve) Clark	Wayne Johnson	David R. Smith
Bruce Cole	José A. Marrero	Harold F. Taylor
Garth P. Corey	Stephen W. McCluer	Richard M. Tressler
John K. Coyle	William McCoy	Lesley Varga
Thomas G. Croda	James McDowall	Allan J. Williamson
Eddie Davis	Dan McMenamin	Walter Wylie

The following members of the individual balloting committee voted on this recommended practice. Balloters may have voted for approval, disapproval, or abstention.

James Anderson	Ramesh Desai	Stephen W. McCluer
Curtis Ashton	David O. Feder	James McDowall
Gary M. Balash	Michael Flack	Edward Rafter
William Bartley	Timothy Furlong	James Ruggieri
Jim Belesiu	Trilok Garg	Thomas Ruhlmann
Richard T. Bolgeo	Jerry Goerz	Amiya Samanta
William Cantor	Jerry Gordon	Richard Setchell
Jay Chamberlin	Randall Groves	David R. Smith
Garth P. Corey	Roger D. Johnson	Kenneth Smith
Bart Cotton	Alan Lamb	James Stoner
John K. Coyle	Daniel Levin	Kurt Uhlir
Guru Dutt Dhingra	José A. Marrero	Lesley Varga
Eddie Davis		Donald W. Zipse

Copyright © 2006 IEEE. All rights reserved.

Copyright The Institute of Electrical and Electronics Engineers, Inc.
Provided by IHS under license with IEEE
No reproduction or networking permitted without license from IHS
Not for Resale

When the IEEE-SA Standards Board approved this recommended practice on September 22, 2005, it had the following membership:

Steve M. Mills, *Chair*
Richard H. Hulett, *Vice Chair*
Don Wright, *Past Chair*
Judith Gorman, *Secretary*

Mark D. Bowman
Dennis B. Brophy
Joseph Bruder
Richard Cox
Bob Davis
Julian Forster*
Joanna N. Guenin
Mark S. Halpin
Raymond Hapeman
William B. Hopf
Lowell G. Johnson
Herman Koch
Joseph L. Koepfinger*
David J. Law
Daleep C. Mohla
Paul Nikolich
T. W. Olsen
Glenn Parsons
Ronald C. Petersen
Gary S. Robinson
Frank Stone
Malcolm V. Thaden
Richard L. Townsend
Joe D. Watson
Howard L. Wolfman

*Member Emeritus

Also included are the following nonvoting IEEE-SA Standards Board liaisons:

Satish K. Aggarwal, *NRC Representative*
Richard DeBlasio, *DOE Representative*
Alan H. Cookson, *NIST Representative*

Don Messina
IEEE Standards Project Editor

Copyright © 2006 IEEE. All rights reserved.

Copyright The Institute of Electrical and Electronics Engineers, Inc.
Provided by IHS under license with IEEE
No reproduction or networking permitted without license from IHS
Not for Resale

Contents

1. Scope 1

2. Normative references 2

3. Definitions 2

4. Safety 2

4.1 General 2
4.2 Protective equipment 3
4.3 Precautions 3
4.4 Procedures 4

5. Maintenance 4

5.1 General 4
5.2 Inspection 4
5.3 Corrective actions 5

6. Test description and schedule 6

6.1 General 6
6.2 Acceptance 6
6.3 Performance 7
6.4 Service 7

7. Procedure for battery tests 8

7.1 General 8
7.2 Pretest requirements 8
7.3 Test length and discharge rate 8
7.4 Capacity test methods 9
7.5 Acceptance and performance tests 12
7.6 Service test 12
7.7 Restoration 13
7.8 Completion of recharge 13

8. Battery replacement criteria 13

9. Records 13

Annex A (informative) Determining the state of charge 15

Annex B (informative) Voltages 16

Copyright © 2006 IEEE. All rights reserved.

.

Copyright The Institute of Electrical and Electronics Engineers, Inc.
Provided by IHS under license with IEEE
No reproduction or networking permitted without license from IHS
Not for Resale

Annex C (informative) Corrective actions 17

Annex D (informative) Connection detail resistance measurements 21

Annex E (informative) Calculation of battery capacity 28

Annex F (informative) Temperature correction factors 32

Annex G (informative) Glossary 34

Copyright © 2006 IEEE. All rights reserved.

.

Copyright The Institute of Electrical and Electronics Engineers, Inc.
Provided by IHS under license with IEEE
No reproduction or networking permitted without license from IHS

Not for Resale

IEEE Recommended Practice for Maintenance, Testing, and Replacement of Valve-Regulated Lead-Acid (VRLA) Batteries for Stationary Applications

1. Scope

This recommended practice is limited to maintenance, test schedules, and testing procedures that can be used to optimize the life and performance of valve-regulated lead-acid (VRLA) batteries for stationary applications. It also provides guidance to determine when batteries should be replaced.

The maintenance and testing programs described in this recommended practice represent "the best program" based on the information reviewed at the time this document was developed. The user should evaluate these practices against their operating experience, operating conditions, manufacturer's recommendations, resources, and needs in developing a maintenance program for a given application. These maintenance and testing recommendations were developed without consideration of economics, availability of testing equipment and personnel, or relative importance of the application. Development of a maintenance and testing program for a specific application requires consideration of all issues, not just the technical issues considered in this document.

Stationary cycling applications, such as those found in alternative energy applications, are also beyond the scope of this recommended practice.

This recommended practice does not include any other component of the dc system nor surveillance and testing of the dc system, even though the battery is part of that system.

Sizing, installation, qualification, selection criteria, and other battery types and applications are also beyond the scope of this recommended practice.

Copyright © 2006 IEEE. All rights reserved.

Copyright The Institute of Electrical and Electronics Engineers, Inc.
Provided by IHS under license with IEEE
No reproduction or networking permitted without license from IHS
Not for Resale

2. Normative references

The following referenced documents are indispensable for the application of this recommended practice. For dated references, only the edition cited applies. For undated references, the latest edition of the referenced document (including any amendments or corrigenda) applies.

IEEE Std 485™, IEEE Recommended Practice for Sizing Lead-Acid Batteries for Stationary Applications.[1, 2]

IEEE Std. 1187™, IEEE Recommended Practice for Installation Design and Installation of Valve-Regulated Lead-Acid Storage Batteries for Stationary Applications.

IEEE Std 1189™, IEEE Guide for Selection of Valve-Regulated Lead-Acid (VRLA) Batteries for Stationary Applications.

3. Definitions

For the purposes of this recommended practice, the following terms and definitions apply. The glossary in Annex G and *The Authoritative Dictionary of IEEE Standards Terms* should be referenced for terms not defined in this clause.

3.1 expected service life: The anticipated period of time in which a battery will deliver its expected performance for a specific application and environment.

4. Safety

4.1 General

As with other batteries, VRLA batteries are potentially dangerous and proper precautions must be observed in handling and installation. The safety precautions listed herein are considered to be mandatory and shall be followed in all battery installation and maintenance activities. Work on batteries shall be performed only by knowledgeable personnel with proper safety tools and protective equipment.

[1] IEEE publications are available from the Institute of Electrical and Electronics Engineers, Inc., 445 Hoes Lane, Piscataway, NJ 08854, USA (http://standards.ieee.org/).
[2] The IEEE standards or products referred to in this clause are trademarks of the Institute of Electrical and Electronics Engineers, Inc.

Copyright © 2006 IEEE. All rights reserved.

Copyright The Institute of Electrical and Electronics Engineers, Inc.
Provided by IHS under license with IEEE
No reproduction or networking permitted without license from IHS
Not for Resale

4.2 Protective equipment

Although VRLA cells can vent or leak small amounts of electrolyte, electrical safety is the principal but not the only concern for safe handling. The following minimum set of equipment for safe handling of the battery and protection of personnel shall be available:

a) Safety glasses with side shields, goggles, or face shields, as appropriate.

b) Electrically insulated gloves, appropriate for the installation.

c) Protective aprons and safety shoes.

d) Portable or stationary water facilities in the battery vicinity for rinsing eyes and skin in case of contact with acid electrolyte.

e) Class C fire extinguisher. Note that some manufacturers do not recommend the use of CO_2 fire extinguishers due to the potential for thermal shock.

f) Acid neutralizing agent.

g) Adequately insulated tools.

h) Lifting devices of adequate capacity, when required.

NOTE—Although VRLA cells are designed to minimize electrolyte leakage, neutralize any electrolyte with a bicarbonate of soda mixed with approximately 0.1 kg/L of water or other appropriate neutralizing agents.[3]

4.3 Precautions

The following protective procedures shall be observed:

a) Use caution when working on batteries because they present a shock and arcing hazard.

b) Check the voltage to ground (ac and dc) before working around the battery. If the voltage is other than anticipated, or is considered to be in an unsafe range, do not work on the battery until the situation is understood and/or corrected. Wear protective equipment suitable for the voltage.

c) Prohibit smoking and open flame, and avoid arcing in the immediate vicinity of the battery.

d) Provide adequate ventilation, and follow the manufacturer's recommendations during charging.

e) Ensure unobstructed egress from the battery work area.

f) Avoid the wearing of metallic objects such as jewelry while working on the battery.

g) Ensure that work area is suitably illuminated.

h) Follow the manufacturer's recommendations regarding cell orientation.

i) Follow the manufacturer's instructions regarding lifting and handling of cells.

Uninterruptible power system (UPS) or other systems might not be equipped with an isolation transformer. In addition to dc voltage, an ac voltage might also be present. Lack of an isolation transformer may provide a direct path to ground of the dc supply to the UPS. This can substantially increase the electrocution and short-circuit hazards.

[3] Notes in text, tables, and figures are given for information only and do not contain requirements needed to implement the guide.

Copyright © 2006 IEEE. All rights reserved.

Copyright The Institute of Electrical and Electronics Engineers, Inc.
Provided by IHS under license with IEEE
No reproduction or networking permitted without license from IHS
Not for Resale

4.4 Procedures

The following safety procedures should be observed:

a) Restrict all unauthorized personnel from the battery area.

b) Keep the battery clear of all tools and other foreign objects.

c) Avoid static buildup by having personnel contact ground periodically while working on batteries.

d) Do not remove the pressure relief valves without the battery manufacturer's approval.

e) Inspect and test instrumentation for safe working condition.

5. Maintenance

5.1 General

Proper maintenance will prolong the life of a battery and will aid in assuring that it is capable of satisfying its design requirements. A good battery maintenance program will serve as a valuable aid in determining the need for battery replacement. The users must consider their particular application and reliability needs if maintenance procedures, other than those recommended in this document, are used. Battery maintenance should be performed by personnel knowledgeable of batteries and the safety precautions involved.

5.2 Inspection

All inspections should be made under normal float conditions if possible. Readings should be taken in accordance with the manufacturer's instructions. Refer to Annex B – Annex D for more information. All measurements and observations should be recorded for future comparisons.

5.2.1 Monthly

A monthly general inspection should include a check and record of the following:

a) Overall float voltage measured at the battery terminals.

b) Charger output current and voltage.

c) Ambient temperature.

d) The condition of ventilation and monitoring equipment.

e) Visual individual cell/unit condition check to include

   1) Cell/unit integrity for evidence of corrosion at terminals, connections, racks, or cabinet.

   2) General appearance and cleanliness of the battery, the battery rack or cabinet, and battery area, including accessibility.

   3) Cover integrity and check for cracks in cell/unit or leakage of electrolyte.

f) Excessive jar/cover distortion.

g) DC float current (per string). This should be measured using equipment that is accurate at low (typically less than 1 A) currents. (See C.6.)

Copyright © 2006 IEEE. All rights reserved.

Copyright The Institute of Electrical and Electronics Engineers, Inc.
Provided by IHS under license with IEEE
No reproduction or networking permitted without license from IHS
Not for Resale

5.2.2 Quarterly

A quarterly inspection should include the items in 5.2.1 and a check and record of the following (values recorded and observations made should be compared with initial inspection values):

a) Cell/unit internal ohmic values (see C.4).

b) Temperature of the negative terminal of each cell/unit of battery (see B.3).

c) Voltage of each cell/unit (see B.2).

5.2.3 Yearly and initial

The yearly inspection and the initial installation should include the items in 5.2.1, 5.2.2, and a check and record of the following:

a) Cell-to-cell and terminal connection detail resistance of entire battery (see C.1 and Annex D).

b) AC ripple current and/or voltage imposed on the battery (see C.5, and consult the manufacturer).

NOTE—Refer to Clause 6 for testing frequency.

5.2.4 Special inspections

If the battery has experienced an abnormal condition (such as a severe discharge, overcharge, or extreme high ambient temperature), an inspection should be made to assure that the battery has not been damaged. Include the requirements for the yearly inspection.

5.3 Corrective actions

5.3.1 Immediate

The following items indicate conditions that should be corrected before the next general inspection:

a) If connection resistance readings obtained in 5.2.3 are more than 20% above the installation value or above a ceiling value established by the manufacturer, or if loose connections are noted, retorque and retest. If terminal corrosion is noted, clean the corrosion and check the resistance of the connection. If retested resistance value remains unacceptable, the connection should be disassembled, cleaned, reassembled, and retested (see C.1).

b) When cell/unit internal ohmic values deviate by a significant amount from either the installation value or from the average of all connected cells/units, additional actions are needed (see C.4 for guidance).

c) If any electrolyte is found, determine source and institute corrective action. Clean excessive dirt on cells or connectors when noted. Remove any electrolyte seepage on cell covers and containers with a bicarbonate of soda solution (or other neutralizing agent) 0.1 kg to 1 L of water. Do not use hydrocarbon-type cleaning agents (oil distillates) or strong alkaline cleaning agents, which may cause containers and covers to crack or craze. Use extreme care when cleaning battery systems to prevent ground faults (see Clause 4).

d) When the float voltage, measured at the battery terminals, is outside of its recommended operating range, the charger voltage should be adjusted. The out-of-range condition may have been caused by a defective charger and may need to be investigated. The recommended operating range may be affected by temperature (see Annex B).

Copyright © 2006 IEEE. All rights reserved.

Copyright The Institute of Electrical and Electronics Engineers, Inc.
Provided by IHS under license with IEEE
No reproduction or networking permitted without license from IHS
Not for Resale

5.3.2 Routine

The following items indicate conditions that, if allowed to persist for extended periods, can reduce battery life. They do not necessarily indicate a loss of capacity. Therefore, the corrective action may be accomplished before the next quarterly inspection, provided that the battery condition is monitored at regular intervals:

a) If any cell/unit voltage is below its respective critical minimum voltage as specified by the manufacturer, corrective action should be given (see C.3). Do not charge at rates above the manufacturer's recommendation for the specific ambient temperature involved.

b) When cell temperatures deviate more than 3 °C from each other during a single inspection, determine the cause and correct. If sufficient correction cannot be made, contact the manufacturer for allowances that must be taken.

c) Other abnormalities. See Annex B and Annex C for a more detailed discussion of these abnormalities and the urgency of corrective actions.

6. Test description and schedule

6.1 General

The following schedule of tests can be used to determine whether the battery meets its specification or the manufacturer's rating, or both (6.2): Periodically determine whether the performance of the battery is within acceptable limits (6.3); and if required, determine whether the battery, as found, meets the design requirements of the system to which it is connected (6.4). Recording test data (battery voltage and individual cell voltage during the capacity test and the capacity to end-of-discharge voltage) for trending purposes provides the user with a means of predicting future performance and anticipated battery replacement time.

6.2 Acceptance

An acceptance test of the battery capacity (7.5) should be made at the manufacturer's factory or upon initial installation, as determined by the user. The test should meet a specific discharge rate and duration relating to the manufacturer's rating or to the purchase specification's requirements.

All inspections listed in 5.2 should also be completed before performing an on-site acceptance test.

Batteries may have less than rated capacity when delivered. Unless 100% capacity upon delivery is specified, the initial capacity of every cell should be at least 90% of rated capacity. This may rise to rated capacity after several charge–discharge cycles or after a period of float operation (IEEE Std 485[4]). These acceptance criteria should be based on a time-adjusted calculation (7.4.2.2), running the full published rate.

An acceptance test should also establish the baseline capacity for trending purposes. If the time adjustment method (7.4.2) will be used for future performance tests, then the above time-adjusted calculation can be used for the baseline. If the rate adjustment method (7.4.3) will be used for future testing, then an additional capacity calculation should be performed in accordance with 7.4.3.5 to establish the baseline.

[4] Information on references can be found in Clause 2.

Copyright © 2006 IEEE. All rights reserved.

Copyright The Institute of Electrical and Electronics Engineers, Inc.
Provided by IHS under license with IEEE
No reproduction or networking permitted without license from IHS
Not for Resale

6.3 Performance

A performance test of the battery capacity (7.5) should be made upon installation. It is desirable for comparison purposes that the performance tests be similar in duration to the battery duty cycle.

Batteries should undergo additional performance tests periodically. When establishing the interval between tests, factors such as design life and operating temperature should be considered. It is recommended that the performance test interval should not be greater than 25% of the expected service life or two years, whichever is less. The expected service life may be significantly less than the warranty period. The recommended interval assumes that an on-site acceptance test was performed with acceptable results. Acceptable results are defined as the capacity of each cell exceeding 90%, and the capacity of all cells are within 10% of the average cell performance. For batteries that were not acceptance tested on site or had unacceptable results, the first performance test should be given within one year of installation.

Capacity testing may also be warranted within the recommended interval where internal ohmic values have changed significantly between readings and/or significant physical changes have occurred to the cells (e.g., leakage, bulging, etc.).

Annual performance tests of battery capacity should be made on any battery that shows signs of degradation or has reached 85% of the service life expected for the application. Degradation is indicated when the battery capacity drops more than 10% from its capacity on the previous performance test or is below 90% of the manufacturer's rating.

If performance testing is to be used solely to trend the capacity of the battery, then perform requirement a) through requirement g) of 7.2. If performance testing is to be used to reflect maintenance practices as well as trending, then omit requirement a), perform requirement b) but take no corrective action unless there is a possibility of permanent damage to the battery, and perform requirement c) through requirement g) of 7.2. If on a performance test that is used to reflect maintenance practices, the battery does not deliver its expected capacity, then the test should be repeated after requirement a) and requirement b) of 7.2 have been completed.

When the battery is required to supply varying loads for specified time periods (a load duty cycle), the performance test may not substantiate the battery's capability to meet all design loads, particularly if high-rate, short-duration loads determine the battery size.

6.4 Service

This is a test of the battery's ability, as found, to satisfy the design requirements (battery duty cycle) of the dc system. When a service test is conducted on a regular basis, it will reflect maintenance practices when requirement a) and requirement b) of 7.2 are not performed. Trending battery voltage during the critical periods of the load duty cycle will provide the user with a means of predicting when the battery will no longer meet design requirements. If the system design changes, sizing (IEEE Std 485) will have to be reviewed and the service test will have to be modified accordingly.

Copyright © 2006 IEEE. All rights reserved.
--`,,```,,,,````-`-`,,`,,`,`,,`---

Copyright The Institute of Electrical and Electronics Engineers, Inc.
Provided by IHS under license with IEEE
No reproduction or networking permitted without license from IHS
Not for Resale

7. Procedure for battery tests

7.1 General

This procedure describes the recommended practice of testing the battery. All testing should follow the safety requirements listed in Clause 4.

7.2 Pretest requirements

The following list defines the activities and data required before initiating a discharge test, except as noted in 6.3 and 7.6:

a) If an equalizing charge is specifically recommended by the manufacturer as a normal periodic maintenance event, verify that it has been completed more than 3 days and less than 30 days before the start of the test.

b) Check all battery connections and ensure that all resistance readings are correct for the system (5.3.1).

c) Read and record the float voltage of each cell/unit just before the test.

d) Read and record the temperatures of several battery cells/units to determine an average battery temperature (suggest 10% or more cell/units).

e) Read and record the battery terminal float voltage.

f) Measure and record individual cell/unit internal ohmic values before the test.

g) Take adequate precautions (such as isolating the battery to be tested from other batteries and critical loads) to ensure that a failure will not jeopardize other systems or equipment.

7.3 Test length and discharge rate

7.3.1 Test length

Three different types of battery discharge tests are presented in this recommended practice: acceptance, performance, and service tests. Acceptance and performance tests are both tests of a battery's capacity. The service test will verify the battery's ability to meet its duty cycle.

— See 7.6 for determining the length of a service test.

— The performance and acceptance tests are presented in 7.5, and the duration is recommended to be approximately the same as the duty cycle. These tests may not confirm the ability of the battery to meet its duty cycle, particularly if very high-rate, short-duration loads determine the battery size.

7.3.2 Discharge rate

The discharge rate for a capacity test should be a constant current or constant power load based on the manufacturer's rating of the battery for the selected test length. See 7.4 for discussion on determining the discharge rate for capacity tests.

Copyright © 2006 IEEE. All rights reserved.

Copyright The Institute of Electrical and Electronics Engineers, Inc.
Provided by IHS under license with IEEE
No reproduction or networking permitted without license from IHS
Not for Resale

In the previous revision of this recommended practice, the discharge rate for the time-adjustment method was adjusted for temperature before conducting the test. This previous method of temperature compensation is acceptable. In this revision, the time-adjustment method is revised to apply the temperature correction to the capacity calculation after completion of the test. Users may transition to this new method at an appropriate time, for example, at battery replacement.

The discharge rate for service tests is discussed in 7.6.

7.4 Capacity test methods

7.4.1 General

There are two methods for battery capacity testing: rate-adjusted and time-adjusted. For tests greater than 1 h, the time-adjustment method in 7.4.2 is recommended. The rate-adjustment method in 7.4.3 is recommended for test durations less than 1 h. For tests of 1-h duration, either method can be used. Once a test method is chosen, all subsequent tests should use the same method.

Refer to Annex E for the differences between the two methods.

7.4.2 Time-adjustment method

When using this method, no correction of any type is required before the performance of the test. This method is recommended for acceptance tests and performance tests that have a duration of 1 h or greater.

7.4.2.1 Temperature factors

In the previous version of this recommended practice, the discharge rate for the time-adjustment method was adjusted for temperature before conducting the test. This previous method is acceptable. In this version, the temperature compensation method is revised to apply the temperature correction to the capacity calculation after completion of the test. Users may transition to this new method at an appropriate time, for example, at battery replacement.

Table 1 shows typical temperature factors for use in the capacity calculation formula of 7.4.2.2. Consult the manufacturer to see if specific temperature factors are available for the battery being tested.

Table 1—Recommended time correction factor (K_T)

Initial temperature (°C)	Temperature correction factor K_T	Initial temperature (°C)	Temperature correction factor K_T	Initial temperature (°C)	Temperature correction factor K_T
5	0.684	22	0.966	30	1.045
10	0.790	23	0.977	31	1.054
15	0.873	24	0.986	32	1.063
16	0.888	25	1.000	33	1.072
17	0.902	26	1.006	34	1.081
18	0.916	27	1.015	35	1.090
19	0.929	28	1.025	40	1.134
20	0.942	29	1.036	45	1.177
21	0.954	—	—	—	—

NOTE—Manufacturers recommend that battery testing be performed between 18 ºC and 32 ºC. These values are average for all times between 1 h and 8 h. See Annex F for the Fahrenheit conversion for Table 1.

Copyright © 2006 IEEE. All rights reserved.

Copyright The Institute of Electrical and Electronics Engineers, Inc.
Provided by IHS under license with IEEE
No reproduction or networking permitted without license from IHS
Not for Resale

7.4.2.2 Time capacity determination

Equation (1) is used to determine the battery or cell/unit capacity for an acceptance test or a performance test that runs 1 h or longer for the time adjusted method:

$$C = \left(\frac{t_A}{t_S \times K_T} \right) \times 100 \tag{1}$$

where

C is the % capacity at 25 ºC
t_A is the actual time of test to specified terminal or cell/unit voltage
t_S is the rated time to specified terminal or cell/unit voltage
K_T is the correction factor for the cell temperature before the start of the test (Table 1)

7.4.3 Rate-adjustment method

7.4.3.1 General

This method is recommended for performance or acceptance tests of 1 h or less. See Annex E for a discussion on the time-adjusted and rate-adjusted methods.

There are two variants of this method, based on the discharge rate used for testing: adjusting the published rating for the end-of-life condition (7.4.3.2) and using the full published rate (7.4.3.3). Either variant is valid and will produce accurate results. The adjusted-rate variant is preferred, because testing an aged battery at a high rate may result in a very short runtime if the full published rate is used (E.3.3). However, using the full published rate may be simpler and/or the user may not have an option to adjust the test rate if a fixed load is used (e.g., UPS modules/ac load banks).

7.4.3.2 Test run at adjusted rate

In this variant, the published rating for the selected test length is derated to simulate the end-of-life condition. The derating factor is based on the aging factor used in the sizing calculation (see IEEE Std 485) or, if this is not known, on the accepted end-of-life capacity for the battery. In no case will this factor be less than 80% (Clause 8), nor will the test discharge rate be less than the continuous load current for the application.

The test discharge rate is the manufacturer's published rating multiplied by the derating factor. For an end-of-life capacity of 80%, the test rate will be 80% of the published rate. The test rate is not adjusted for initial battery temperature if the average cell temperature is in the range of 15 °C to 35 °C. Outside of this range, the test rate should be adjusted by dividing by the appropriate factor in Table 2.

Copyright © 2006 IEEE. All rights reserved.
Copyright The Institute of Electrical and Electronics Engineers, Inc.
Provided by IHS under license with IEEE
No reproduction or networking permitted without license from IHS
Not for Resale

Table 2—Recommended rate correction factor (K_C) for temperatures other than 25 ºC

Initial temperature (°C)	Temperature correction factor K_C	Initial temperature (°C)	Temperature correction factor K_C	Initial temperature (°C)	Temperature correction factor K_C
		21	1.042	30	0.956
5	1.289	22	1.031	31	0.949
10	1.190	23	1.021	32	0.941
15	1.119	24	1.010	33	0.937
16	1.110	25	1.000	34	0.934
17	1.094	26	0.988	35	0.930
18	1.083	27	0.979	40	0.894
19	1.070	28	0.971	45	0.874
20	1.056	29	0.963	—	—

NOTE—Manufacturers recommend that battery testing be performed between 18 ºC and 32 ºC. These values are average for all published rates up to 8 h. See Annex F for the Fahrenheit conversion for Table 2.

When testing a relatively new battery using this variant, the actual test time may be considerably longer than the nominal time. It is important for trending purposes that the test is always run to the final voltage [requirement c) of 7.5]. Battery capacity for the rate-adjustment method is determined in accordance with 7.4.3.5.

7.4.3.3 Test run at full published rate

In this variant, capacity tests are carried out at the full published discharge rate without adjusting the test rate for the end-of-life condition. This is generally recommended for acceptance tests (6.2) and is required if the battery sizing calculation did not include an aging factor or the aging factor is unknown. Adjustment of the test rate for initial battery temperature should be in accordance with the recommendations in 7.4.3.2 Battery capacity is calculated in accordance with 7.4.3.5.

As discussed in E.3.3, testing a battery that is in acceptable condition may produce results that seem to be anomalous when using the full published rate.

7.4.3.4 Rate-adjustment temperature compensation factors

Table 2 shows typical temperature factors for use in the capacity calculation formula of 7.4.3.5. Consult the manufacturer to see whether specific temperature factors are available for the battery being tested.

7.4.3.5 Rate-adjustment capacity determination

To calculate the percent capacity for this test method, it is necessary to consult the manufacturer's data to determine the published rating for the actual time of the test to the specified terminal voltage. The battery or cell/unit capacity is then calculated using:

$$C = \frac{X_a \times K_c \times 100}{X_t} \quad (2)$$

Copyright © 2006 IEEE. All rights reserved.

Copyright The Institute of Electrical and Electronics Engineers, Inc.
Provided by IHS under license with IEEE
No reproduction or networking permitted without license from IHS
Not for Resale

where

C is the % capacity at 25 ºC
X_a is the actual rate used for the test
X_t is the published rating for time to specified terminal or cell/unit voltage
K_c is the temperature correction factor (Table 2)

Rates can be in either amperes or watts. See Annex E for an example of this method.

7.5 Acceptance and performance tests

Set up the necessary instrumentation with the provision that the load be varied to maintain a constant current or a constant power discharge equal to the rate determined in 7.4 for the selected time.

a) Disconnect the charging source. Connect the load to the battery, start the timing, and continue to maintain the selected discharge rate.

b) Read and record individual cell/unit voltages and the battery terminal voltage. The readings should be taken while the load is applied at the beginning, at specified intervals and at the completion of the test. There should be a minimum of five sets of readings, if possible.

   Individual cell voltage readings should be taken between respective terminals of like polarity of adjacent cells/units so as to include the voltage drop of the intercell connectors. Due to the wide diversity of VRLA battery terminal connection designs, the selection of the appropriate voltage probe location must be carefully analyzed to ensure that only the appropriate voltage drops are included. See Figure C.1.

c) Maintain the discharge rate until the battery terminal voltage decreases to a value equal to the specified minimum voltage per cell times the number of cells (for example, 1.75 V times the number of cells).

d) If earlier in the test, an individual cell/unit is approaching reversal of its polarity (0 V) or a unit voltage is lower by 2 V or more (compared with the average unit voltage) but the terminal voltage has not reached its test limit, the test should be continued with the cell/unit bypassed where feasible. The time required to disconnect the cell or unit, install the jumper, and restart the test shall not exceed 10% of the total test duration or 6 min, whichever is shorter. Complete the bypass away from the cell/unit to avoid arcing. The new minimum voltage should be determined based on the remaining cells.

   It is very important that the user work with the manufacturer or other experienced personnel to plan the course of action. The possibility of a weak cell(s) should be anticipated, and preparations should be made for bypassing the weak cell(s) with minimum hazard to personnel.

e) Observe the battery for abnormal intercell/unit connector or terminal heating.

f) At the conclusion of the test, determine the battery capacity according to the procedure outlined in 7.4.

7.6 Service test

The system designer should establish the service test procedure and acceptance criteria before the test. Recommended procedure for the test is as follows:

a) The initial conditions shall be as identified in 7.2, omitting requirement a). When performing requirement b), take no corrective action unless there is a possibility of permanent damage to the battery.

Copyright © 2006 IEEE. All rights reserved.

Copyright The Institute of Electrical and Electronics Engineers, Inc.
Provided by IHS under license with IEEE
No reproduction or networking permitted without license from IHS Not for Resale

b) The discharge rate(s) and test length and their duration(s) should correspond as closely as is practical to the battery duty cycle.

c) Follow the test procedures outlined in item a) through item e) of 7.5. The voltage readings should be taken just before the end of each load period and at the completion of the test.

d) If the battery does not meet the battery duty cycle, review its rating to determine whether it was properly sized; recharge the battery, and if necessary, inspect the battery as discussed in 5.2.3, take necessary corrective actions, and repeat the service test. A battery performance test (6.3) may also be required to determine whether the problem is the battery or the application.

7.7 Restoration

Disconnect all test apparatus. Recharge and return to normal service.

CAUTION

A cell/unit with an internal short shall not be placed on charge due to the possibility of an explosion and/or thermal runaway (Annex B). The charger must have its output voltage adjusted for the reduced overall system voltage for the remainder of the cells.

7.8 Completion of recharge

The pattern of charging current delivered by a conventional voltage-regulated charger after a discharge provides a method for determining the state of recharge. As the cells approach full charge, the battery voltage rises to approach the charger output voltage setting and the current decreases. When the charging current has stabilized at the charging voltage, the battery is fully charged (see Annex A for cautions).

8. Battery replacement criteria

This recommended practice is to replace a cell/unit or the battery if its capacity, as determined in 7.4, is below 80% of the manufacturer's rating. The timing of the replacement is a function of the sizing criteria used and the capacity margin available, as compared with the load requirements. A capacity of 80% shows that the cell/unit/battery rate of deterioration is increasing even if there is ample capacity to meet the load requirements of the dc system. Other factors, such as unsatisfactory service test results (7.6), or the addition of new load requirements, may require battery replacement. Physical characteristics, such as abnormally high cell/unit temperatures (Annex B), are often determinants for complete battery or individual cell/unit replacements. Reversal of a cell as described in item d) of 7.5 is also a good indicator for further investigation into the need for individual cell/unit replacement. Replacement cell/units, if used, should have electrical characteristics compatible with existing cell/units and should be tested before installation. Individual replacement cells or units are not usually recommended as the battery nears its end of life.

A low cell/unit voltage that fails to respond to corrective action is a good indicator for further investigations into the need for replacement (B.2).

9. Records

Data, such as indicated in 5.2, should be recorded at the time of installation and as specified during each inspection. Data records should also contain reports on corrective actions (5.3) and the results of all tests. Correct interpretation of data obtained from inspection, corrective actions, and tests are important to the operation and life of the batteries.

Copyright © 2006 IEEE. All rights reserved.

Copyright The Institute of Electrical and Electronics Engineers, Inc.
Provided by IHS under license with IEEE
No reproduction or networking permitted without license from IHS
Not for Resale

It is recommended that forms be prepared to record all data in an orderly fashion and in such a way that comparison with past data is convenient. A meaningful comparison will require that all data be converted to a standard base in accordance with the manufacturer's recommendations.

Copyright © 2006 IEEE. All rights reserved.
--`,,```,,,,````-`-`,,`,,`,`,,`---

Copyright The Institute of Electrical and Electronics Engineers, Inc.
Provided by IHS under license with IEEE
No reproduction or networking permitted without license from IHS
Not for Resale

Annex A

(informative)

Determining the state of charge

A.1 Battery discharge/charge cycle parameters

The most accurate method of returning a battery to full charge after a discharge is to assure greater than 100% of the ampere-hours removed are returned to the battery, allowing for losses due to hydrogen and heat generation. A 10% estimate is conservatively used for losses. The charging method can affect the time that it takes to restore the battery to full charge. Constant voltage charging effectiveness is dependent on the length of time in current limit and the value of the charging current after it stabilizes. If the charging voltage is low, the charger will come out of current limit sooner and the current will drop off quickly reducing the ampere-hours returned to the battery. Because of the accuracy of some measuring equipment at low currents, the level of current at float voltage may be too low to assure that the charging current is not dropping and has stabilized. Charging at a voltage above float, if allowed by the manufacturer, results in a positive indication that current stability has been achieved. For low-voltage charging systems, cumulative ampere-hours should be considered as an indicator of the return of the battery to a fully charged state.

Inadequate voltage during the charge process can lead to a cell that cannot repeat its previous performance. The resulting battery will yield a lower capacity than its last performance test. Low charging voltage also leads to an extended charging period to return the required ampere-hours, lowering the charging current. Normal cell temperatures are preferred for charging a battery. Low temperatures will reduce the current drawn and slow the charging process, and the low current readings may also yield misleading indications of a charged state. The manufacturer should be consulted for the proper recharge voltage, temperature, and the expected duration of recharge. Low stable charge current is a consistent indicator at adequate charging voltage and normal temperatures.

A.2 Stabilized charging current used to determine a fully charged condition

The pattern of charging current delivered by a conventional voltage regulated charger after a discharge is the most accurate method for determining the state of charge. As the cells approach full charge, the battery voltage rises to approach the charger output voltage setting, and the charging current decreases. When the charging current has stabilized at the charging voltage, for three consecutive hourly readings, the battery is near 100% charged. The expected charging current range applicable to each model may be verified by test or in consultation with the manufacturer.

If allowed by the manufacturer, the charging voltage may be set at a value higher than normal float voltage to reduce charging time. The charging voltage may be reduced to the float value after the charging current stabilizes. The float current will soon stabilize.

Chemical changes within the battery due to the aging process may result in the negative plate and the positive plate unequally sharing the charge. In such cases, the positive plate (or the negative) may sulfate due to low charging current.

NOTE—Refer to the individual manufacturer's instructions for time periods to maintain charging voltages after current stabilization. A change to the plant voltage may adversely affect the connected load. The user should always consider the effect on the connected load before adjusting the plant voltage.

Copyright © 2006 IEEE. All rights reserved.

Copyright The Institute of Electrical and Electronics Engineers, Inc.
Provided by IHS under license with IEEE
No reproduction or networking permitted without license from IHS
Not for Resale

Annex B

(informative)

Voltages

B.1 Battery float voltage

The correct battery float voltage measured at the battery terminals is critical with valve-regulated cells. The battery float voltage must be within the manufacturer's recommended limits and manufacturer's recommendations for considering temperature compensation (B.3).

B.2 Individual cell voltages

It is not unusual to observe a wide float voltage range between valve-regulated cells than what is normal for vented-type cells. This is especially true for the first six months after installation. Equalization is not normally used to correct apparent imbalances (C.3).

Low-voltage cells: Low voltage is not, by itself, an indication of the state of charge of a cell. Prolonged operation of cells below the manufacturer's low-voltage limit can reduce the life expectancy of cells.

A cell voltage consistently below normal float conditions and not caused by elevated temperature of the cell indicates internal cell problems that may require cell replacement.

High-voltage cells: Individual cells may exhibit a high voltage shortly after installation and should come into line with the others as they lose excess water and approach a fully recombinant state. Prolonged operation above the cell's high-voltage limit specified by the battery manufacturer has a detrimental effect (e.g., accelerated dryout).

B.3 Effect of temperature on Voltage

At a constant battery voltage the charging current will increase as the temperature of the electrolyte increases. Therefore, cells in a battery at a higher temperature than others indicate a lower cell voltage. An effort should be made to eliminate the cause of any temperature differential between cells.

As a general rule, continuous prolonged use at elevated temperatures will reduce the battery life by approximately one half for every 8 °C (15 °F) above 25 °C (77 °F) that valve-regulated batteries operate. This effect can be mitigated to some extent by the use of temperature-compensated chargers. Operation at elevated temperatures can also lead to thermal runaway (C.2).

Copyright © 2006 IEEE. All rights reserved.

Copyright The Institute of Electrical and Electronics Engineers, Inc.
Provided by IHS under license with IEEE
No reproduction or networking permitted without license from IHS
Not for Resale

Annex C

(informative)

Corrective actions

C.1 Connection resistance

It is good practice to read and record intercell and terminal connection resistances as a baseline upon installation as recommended by IEEE Std 1187. It is very important that the procedure be consistent to detect upward changes that could be caused by corrosion or loose connections. Increased resistance is a cause for concern and may require corrective action.

Normal connection resistance varies with the cell size and connection type. The following methods may be used to establish a connection resistance limit that should initiate corrective action before the next inspection:

a) The manufacturer may be contacted to provide a recommended action limit.

b) Baseline value may be established by measuring the connections after initial installation or after a cleaning of the connections. A 20% increase from a baseline value may serve as a criterion for initiation of corrective action before the next inspection. Note that baseline values are specific to each connection and not an average of all connections.

c) The manufacturer may be contacted for the expected baseline values. A 20% increase from the manufacturer's expected baseline value may serve as the action limit.

d) The design maximum for the connection resistance may be calculated using either a specific or generic manufacturer's connection voltage drop criterion. Strap connections are typically designed for a 20 mV to 30 mV drop. The maximum connection resistance for a generic criteria of 20 mV can be calculated using V = IR. The current (I) should be equal to a current that bounds the continuous current in the duty cycle. Typically the performance test current rate bounds the continuous current in the duty cycle. Under these conditions, I would equal the performance test rate and V = 0.020 V. Solve R = V/I for the maximum connection resistance.

The timing of the corrective action for increased connection resistance should be determined by an analysis of the effects of the increased resistance. Since option d) establishes a value near the design limit, the timeliness of the action may be more critical than option a) through option c). Excessive acid wicking to the connection or spillage from above cells may result in approaching the connection resistance limits rapidly. See Annex D for the suggested methods of measuring connection resistances.

Whenever battery connections are cleaned and reassembled, a new baseline should be established. If the baseline information for an installed battery is unknown, then a baseline should be established when all connections are cleaned and reassembled. When establishing a baseline, the resistance measurements for the entire battery should be taken, and if any connection is (1) greater than 20% above the average of the measurements or (2) greater than 5 μΩ above the average (for connections that have an average resistance less than 25 μΩ), then the connection(s) should be retorqued and retested. If the retested resistance value remains unacceptable, the connection should be disassembled, cleaned, reassembled, and retested.

C.2 Thermal runaway

When a VRLA cell is operating on float or overcharge in a fully recombinant mode, there is no net chemical reaction and almost all overcharge energy results in heat generation. If the design of the system

Copyright © 2006 IEEE. All rights reserved.

Copyright The Institute of Electrical and Electronics Engineers, Inc.
Provided by IHS under license with IEEE
No reproduction or networking permitted without license from IHS
Not for Resale

and its environment are such that the heat produced can be dissipated and equilibrium can be reached, then there is no thermal runaway problem. However, if the recombination reaction gives rise to a rate of heat evolution that exceeds the rate of heat dissipation, the battery temperature will rise and more current will be required to maintain the float voltage. The additional current results in still more recombination and heat generation, which further raises battery temperature and so on. The net effect can be accelerated dry-out and/or melting of the battery. This potential problem is further aggravated by elevated ambient temperatures or by cell or charging system malfunctions. The possibility of thermal runaway can be minimized by the use of appropriate ventilation between and around the cells and by limiting the charger output current and voltage, such as by using temperature-compensated chargers. In the gelled electrolyte system, the gel has intimate contact with the plates and the container walls and provides better heat dissipation characteristics than the absorbed electrolyte system, but not as well as in a vented ("flooded") system.

C.3 Equalizing charge

Periodic equalizing is not normally required to correct cell/unit imbalance. Equalize charging should not be performed unless specifically recommended by the manufacturer.

C.4 Cell/Unit internal ohmic measurements

These measurements provide information about circuit continuity and can be used for comparison between cells and for future reference.

The internal ohmic properties of a cell consist of several factors, including the physical connection resistances, the ionic conductivity of the electrolyte, and the activity of the electrochemical processes occurring at the plate surfaces. With multicell units, there are additional contributions due to intercell connections.

The techniques for measuring internal ohmic properties are not standardized, and in many cases, the techniques are proprietary. However, the basic goal of these measurements is to provide some form of consistent method to quantify the ohmic value. The fundamental principal behind the measurement is to apply a forcing function into the cell and measure the resultant response. Different manufacturers use various frequencies and amplitudes and interpret the resultant signal differently. The IEEE endorses no particular technique or manufacturer. Individual users should select equipment based on their particular needs and proven results.

When internal ohmic measurements are taken, the type of test equipment used, the test points selected, cell/unit voltages, and cell/unit temperatures (measured at the negative terminal posts) should be recorded.

Significant changes in the values typically indicate a significant change in the cell that may be reflected in its performance. However, limited changes in the specific values obtained do not necessarily indicate that the cell is free of defect or deterioration.

Cell/unit ohmic values measured will vary with the specific measurement techniques and the conditions under which the measurements are taken.

Internal ohmic values are useful as a trending tool. To use these readings effectively, accurate baseline readings should be taken after about six months of battery operation. Internal ohmic readings taken without the benefit of baseline data may be difficult to interpret and of limited value.

These readings should be trended over time, and the user should note any significant changes from the baseline. Depending on the degree of the change a performance test, cell replacement or other corrective action may be necessary.

Copyright © 2006 IEEE. All rights reserved.
--`,,```,,,,````-`-`,,`,,`,`,,`---
Copyright The Institute of Electrical and Electronics Engineers, Inc.
Provided by IHS under license with IEEE
No reproduction or networking permitted without license from IHS
Not for Resale

What constitutes a significant change is dependent on the battery type, the type of meter, and the failure mechanism. Typically, a change of 30% to 50% from a baseline is considered significant. Consult with the battery manufacturer and/or the test equipment manufacturer for guidance.

Replacement criteria are application specific. The timing of further action or replacement is dependent on the type of service the battery supplies. A battery that is used in noncritical, light drain applications may be left in service longer than a battery exposed to critical, high-rate, or long duration applications.

The accuracy of ohmic measurements may be affected by the presence of parallel strings, because each parallel string represents an alternative current path for the test signal. This effect is more pronounced for installations in which each string comprises four or fewer units (e.g., a 48 V string comprising four units of 12 V). The impact can be quantified using the standard formula for parallel resistances. The most accurate readings can be obtained by taking the string to be measured offline.

C.5 Ripple current

A battery charger with low electrical noise levels must be used for VRLA batteries to limit the ripple current. Many manufacturers recommend the use of filtered battery chargers. An acceptable charger is one that does not raise the average fully charged battery operating temperature, as measured at the negative terminal, by more than 3 °C (5 °F) above ambient in a free-standing condition.

C.6 Float current

Internal problems may cause a battery to require substantially more float current than under normal conditions. This increased float current will eventually generate more heat than the battery can safely dissipate and will lead to further degradation. If left uncorrected, the abnormally high float current will lead to early cell or string failure. The abnormally high float current may also cause a thermal runaway condition, leading to catastrophic battery melt down, explosion, and/or plant destruction.

Under normal conditions, a battery should require about 50 mA of float current per 100 Ah of capacity. If a battery is requiring more than three times the normal float current, there are several possible causes. Those that result from internal cell problems include excessive dryout, negative self-discharge, and cell internal short circuit. Improper float voltage setting or abnormally high ambient temperature may cause abnormally high float current and premature cell failure, but they are not the result of internal cell problems. High current may also result from incomplete battery recharge, which is a normal condition.

When excessive float current is noted, the following steps should be made immediately:

a) Check battery float voltage to ensure that it is within the manufacturer’s guidelines.

b) Measure both room ambient and individual cell temperatures. If either is abnormally high or if cell temperature significantly exceeds room temperature, take steps to reduce float voltage or limit current to prevent thermal runaway, while correcting the cause, wherever possible.

c) Using ohmic techniques, ensure that no cells show unusual departures from expected values.

d) Check individual cell voltages to ensure that no cells have developed internal shorts.

e) A discharge test can pinpoint unexpected positive or negative self-discharge, with resultant capacity loss. If item b) through item d) are noted, a discharge test may be essential to ensure that battery capacity has not been compromised.

Copyright © 2006 IEEE. All rights reserved.

Copyright The Institute of Electrical and Electronics Engineers, Inc.
Provided by IHS under license with IEEE
No reproduction or networking permitted without license from IHS
Not for Resale

C.7 Voltage probe placement

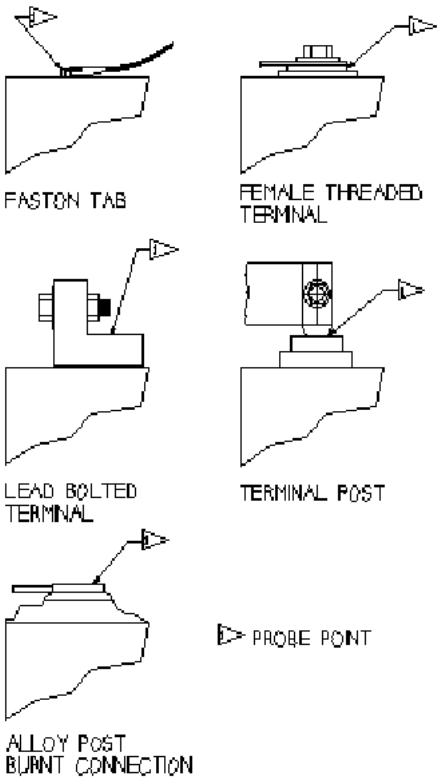

Figure C.1— Voltage probe placement

Copyright © 2006 IEEE. All rights reserved.

Copyright The Institute of Electrical and Electronics Engineers, Inc.
Provided by IHS under license with IEEE
No reproduction or networking permitted without license from IHS
Not for Resale

Annex D

(informative)

Connection detail resistance measurements

D.1 Basis for connection resistance measurements

It is good practice to measure and record intercell and terminal post connection resistances as baseline values upon installation. It is very important that the measurement procedure be consistent to detect upward changes that could be caused by corrosion or loose connections. Increased resistance is a cause for concern and may require corrective action. Connection resistance measurements are particularly important for high-rate applications in which each connection must be capable of carrying a high current.

D.2 General requirements

Normal intercell/block resistances vary greatly as a function of the size of the installation (e.g., from less than 10 μΩ for a large battery to as much as 100 μΩ or more for a smaller battery). The manufacturer should be contacted for the expected values.

When taking micro-ohmmeter measurements, the test probes should be held perpendicular to the battery post. The measurements should be taken from the terminal post of a cell to the terminal post of the adjacent cell as shown in Figure D.1, or from the terminal post to the terminal lug, depending on the configuration.

NOTE—Do not record the measurements in milliohms. All measurements should be acquired with the test instrument set to the lowest resistance scale, and all measurements should be recorded in microohms.

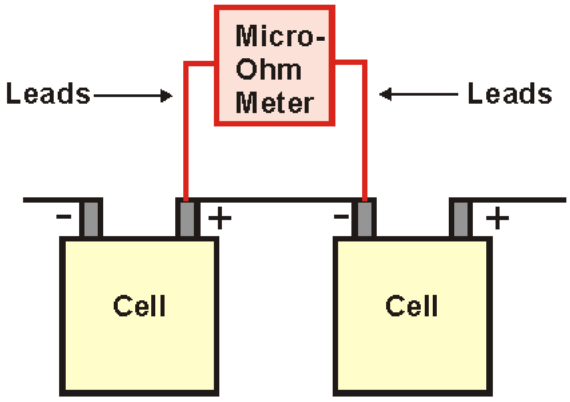

Figure D.1—Proper connection points

CAUTION

Do not take measurements across the cell. This improper action could cause personal injury, damage to the test equipment, and damage to the cell. Refer to Figure D.2 for examples of improper test connections.

Copyright © 2006 IEEE. All rights reserved.

Copyright The Institute of Electrical and Electronics Engineers, Inc.
Provided by IHS under license with IEEE
No reproduction or networking permitted without license from IHS
Not for Resale

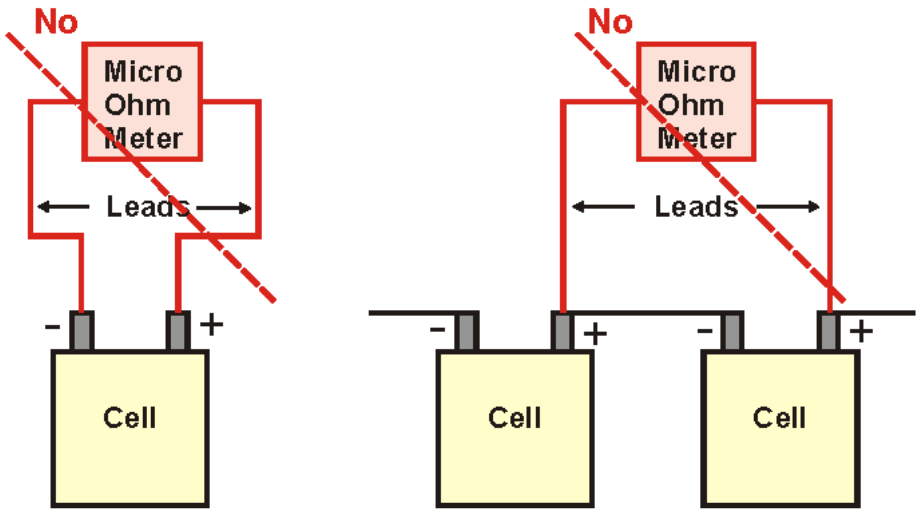

Figure D.2—Improper connection points

CAUTION

A voltage can also be present between a terminal post and earth ground. Do not touch the micro-ohmmeter leads to a cell terminal and the metal battery rack at the same time.

The desired contact point for each micro-ohmmeter probe is on the terminal post rather than on the intercell connection hardware (refer to Figure D.3). Depending on the cell design, it might be difficult to obtain measurements directly onto the terminal post. If this is the case, contact the battery manufacturer for guidance.

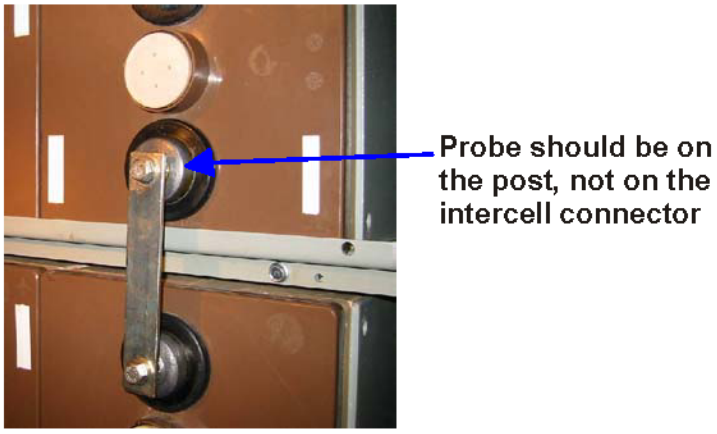

Figure D.3—Probe contact on the post

Copyright © 2006 IEEE. All rights reserved.

Copyright The Institute of Electrical and Electronics Engineers, Inc.
Provided by IHS under license with IEEE
No reproduction or networking permitted without license from IHS
Not for Resale

D.3 Single and parallel intercell connections

Single and parallel intercell connections consist of an intercell connector terminated on each end to a single terminal post. Refer to Figure D.4 through Figure D.7 for examples of this configuration.

For cells with a single positive and negative terminal post as shown in Figure D.4 and Figure D.5, measure the intercell connection resistance of each intercell connection by measuring from the positive terminal post to the negative terminal post of the adjacent cell. Record the measurements.

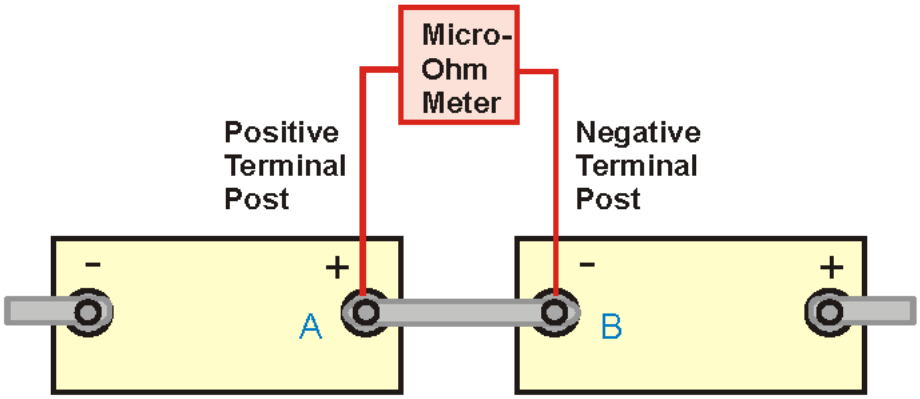

Figure D.4—Single intercell connection

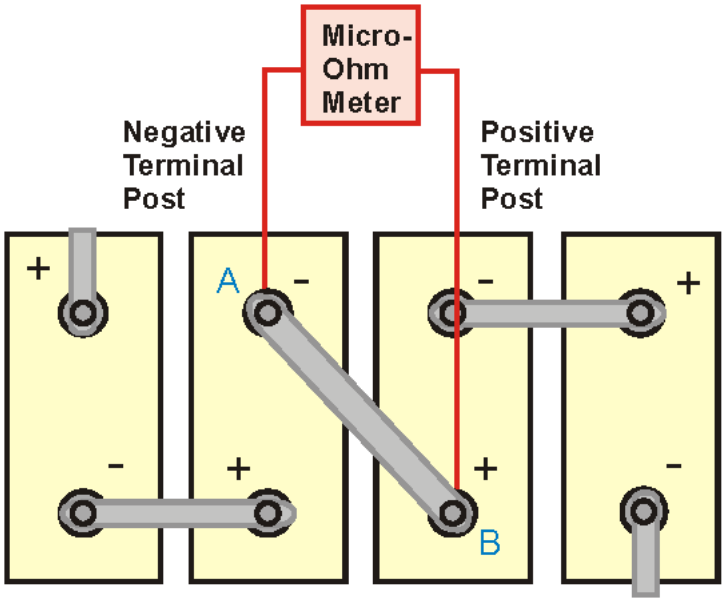

Figure D.5—Single intercell connection, diagonal post arrangement

Copyright © 2006 IEEE. All rights reserved.

Copyright The Institute of Electrical and Electronics Engineers, Inc.
Provided by IHS under license with IEEE
No reproduction or networking permitted without license from IHS
Not for Resale

If there are two positive and two negative terminal posts as shown in Figure D.6, measure and record the intercell connection resistance of each intercell connection by measuring from

a) Terminal post A to terminal post C

b) Terminal post B to terminal post D

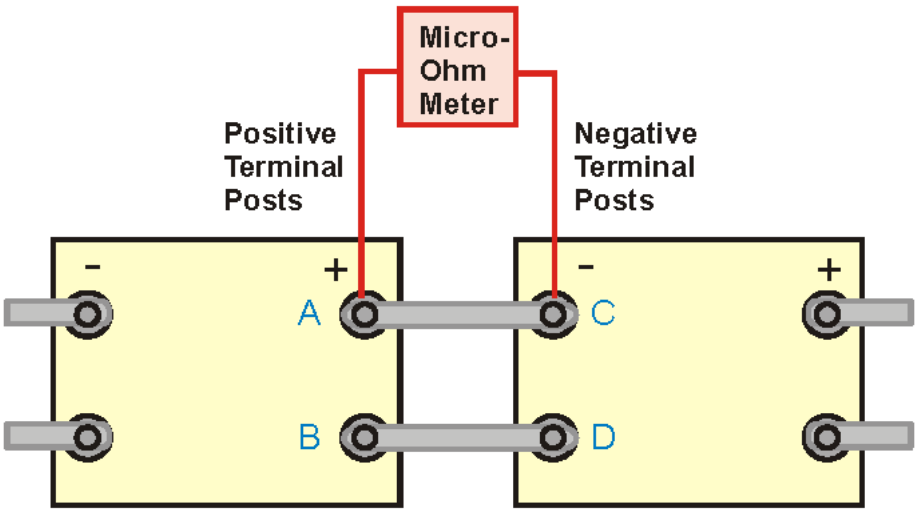

Figure D.6—Parallel intercell connection, two posts

If there are three positive and three negative terminal posts as shown in Figure D.7, measure and record the intercell connection resistance of each intercell connection by measuring from

a) Terminal post A to terminal post D

b) Terminal post B to terminal post E

c) Terminal post C to terminal post F

Copyright © 2006 IEEE. All rights reserved.

Copyright The Institute of Electrical and Electronics Engineers, Inc.
Provided by IHS under license with IEEE
No reproduction or networking permitted without license from IHS
Not for Resale

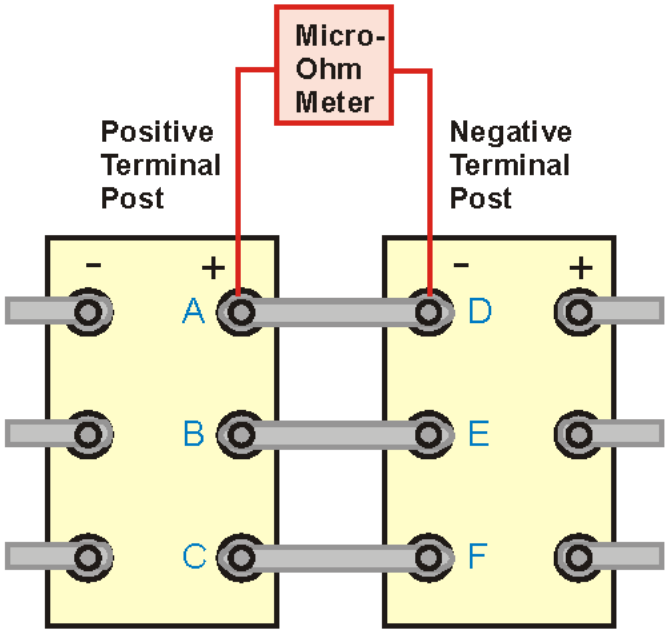

Figure D.7— Parallel intercell connection, three posts

D.4 Multiple post intercell connections

Multiple post intercell connections consist of the intercell hardware connected on each end to more than one terminal post. Figure D.8 shows an example of this configuration.

Referring to Figure D.8 for a double post configuration, measure the intercell connection resistance of each intercell connection by measuring from

a) Terminal post A to terminal post C

b) Terminal post B to terminal post D

Record the measurements. If the cell design has more than two terminal posts, follow the same general process described here.

Copyright © 2006 IEEE. All rights reserved.

Copyright The Institute of Electrical and Electronics Engineers, Inc.
Provided by IHS under license with IEEE
No reproduction or networking permitted without license from IHS
Not for Resale

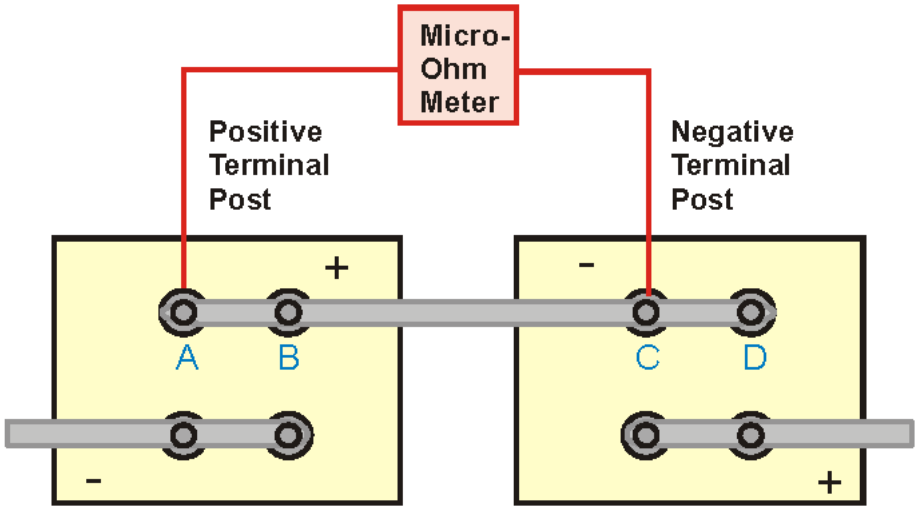

Figure D.8—Double terminal post intercell connection

D.5 Single terminal connections

Single terminal connections consist of a connection resistance measurement from the post to a suitable point onto the connecting hardware. Refer to Figure D.9.

Measure the terminal connection resistance of single terminal connections by measuring from the terminal lug to the terminal post. If there are multiple posts, repeat the measurement for each connection. Record the measurements.

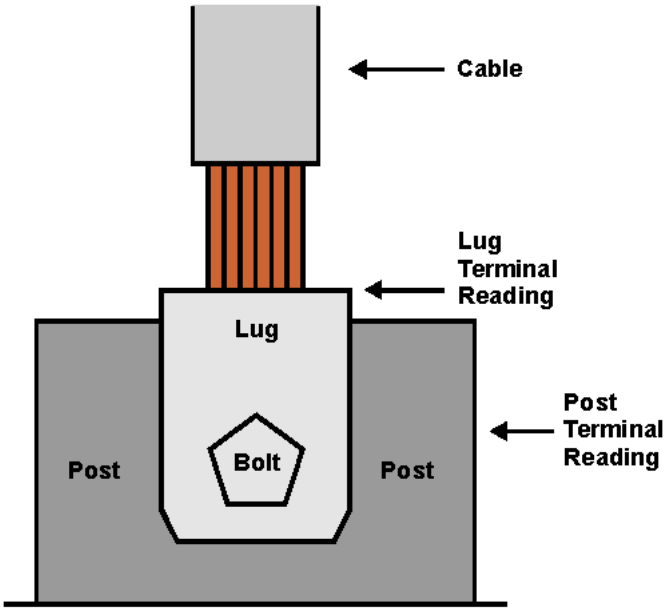

Figure D.9—Single terminal connection

Copyright © 2006 IEEE. All rights reserved.

Copyright The Institute of Electrical and Electronics Engineers, Inc.
Provided by IHS under license with IEEE
No reproduction or networking permitted without license from IHS
Not for Resale

D.6 Connections involving cables

An intercell connection involving a cable is similar in approach to the methods described in the previous clauses (refer to Figure D.10). The principal difference is that the conductor resistance adds to the overall measurement in the terminal post to terminal post measurement. For this reason, the connection resistance should also be checked from each terminal post to its associated lug.

If multiple conductors are attached to the terminal post(s) by means of a mounting plate or other arrangement, follow the same general process described here for a single conductor. Ensure that every connection resistance is measured and recorded.

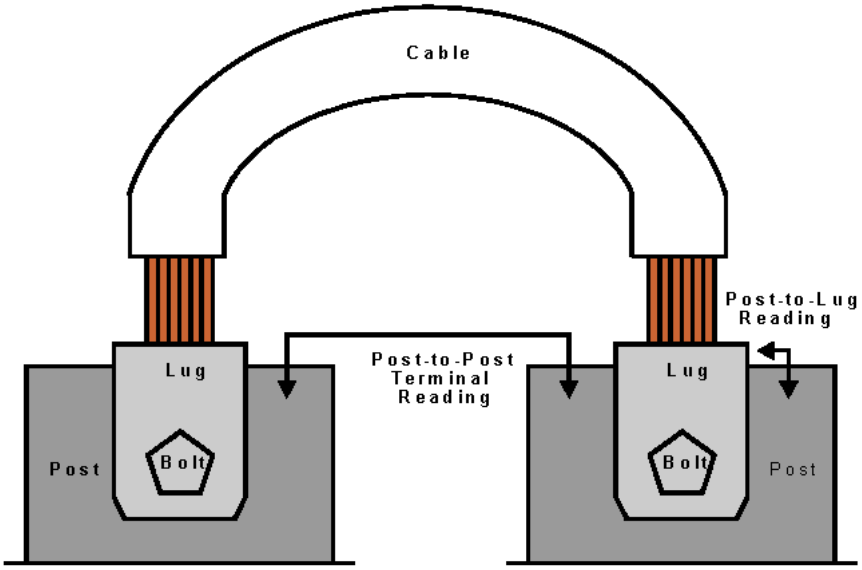

Figure D.10—Single intercell connection with cable

Copyright © 2006 IEEE. All rights reserved.

Copyright The Institute of Electrical and Electronics Engineers, Inc.
Provided by IHS under license with IEEE
No reproduction or networking permitted without license from IHS
Not for Resale

Annex E

(informative)

Calculation of battery capacity

E.1 General

Capacity testing (acceptance and performance tests) is used to trend battery aging. The result of a capacity test is a calculation of the capacity of the battery. The calculated capacity is also used to determine if the battery requires replacement (Clause 8).

E.2 Comparison of time- and rate-adjusted performance test methods

Clause 8 recommends battery replacement at 80% of rated capacity. For a range of cells in which the capacity rating factors are constant, published ratings are proportional to the rated capacity. Thus, 80% of rated capacity also corresponds to 80% of the published rating for a given time. For example, if the published rating for a cell is 100 A for 240 min, the end-of-life capability will be 80 A for 240 min. This is the basis of the rate-adjusted performance test method.

As demonstrated in E.3, a calculation of battery capacity using the rate-adjusted method can be somewhat complex. Although it may be technically correct to use the rate-adjusted method for all test times, the recommended practice is to limit its use to tests with a nominal duration of 60 min or less. For longer test times, a simpler approach is to use the time-adjusted method. In this method, the end-of-life condition is defined using 100% of published current for 80% of the time. Thus, a cell rated at 100 A for 240 min would have an end-of-life capability of 100 A for 240 × 0.8 = 192 min. The calculation of capacity is a simple ratio of the test time to the published time (ignoring temperature adjustments). Because of its simplicity, this method is preferred for tests of long duration.

The time-adjusted method, however, does not take into account changes in battery efficiency with discharge time. Table E.1 shows the published current ratings for the XYZ33 cell type and gives the available capacity (in ampere-hours and percent of rated capacity) for various discharge times, to an end voltage of 1.75 V/cell.

Table E.1—Example values

	8 h	6 h	4 h	3 h	2 h	90 min	60 min	30 min	25 min	15 min	1 min
Rated current (A)	290	368	496	613	800	944	1168	1536	1616	1840	2240
Available capacity (Ah)	2320	2208	1984	1839	1600	1416	1168	768	673	460	37
% of rated Ah	100	95	86	79	69	61	50	33	29	20	2

If the time-adjusted method is used for an 8-h test, the end-of-life point corresponds to 6.4 h (80% of 8 h). The table shows that, in a 6.4-h discharge, a new battery gives about 96% of its 8-h capacity. This 4% reduction is due to a loss of battery efficiency at the shorter discharge time, and is expected to be approximately the same for a battery at the end of life. Thus, when an XYZ33 battery is discharged at the 8-h rate of 290 A, and gives 6.4 h, three quarters of the shortfall is due to battery degradation and one quarter is due to reduced efficiency. This results in a somewhat conservative end-of-life assessment.

Copyright © 2006 IEEE. All rights reserved.

Copyright The Institute of Electrical and Electronics Engineers, Inc.
Provided by IHS under license with IEEE
No reproduction or networking permitted without license from IHS
Not for Resale

For a 30-min test, however, the end-of-life point by the time-adjusted method would be 24 min. The capacity availability at 24 min is only about 86% of the 30-min capacity. Thus, an end-of-life assessment by the time-adjusted method would include only one-quarter battery degradation and three-quarters reduced efficiency. This would result in an excessively conservative decision regarding battery replacement.

By contrast, the rate-adjusted performance test method gives results that are exactly in accordance with the sizing parameters. It should be noted, however, that there is no conservatism in a replacement decision based on 80% of rating, so a timely replacement may be more critical. For a battery in which there is no planned or remaining design margin (IEEE Std 485), the user may wish to adopt a more conservative replacement strategy, such as replacement at 85% of rating.

There is a crossover point at which the time-adjusted method can no longer be considered valid. This corresponds to a lower time limit where the conservatism of this method becomes excessive. The value of this limit depends on the cell design and, to some extent, on the user's outlook. For a cell type designed for long duration telecommunications loads, the crossover point may be 3 h or more. For a high-rate UPS cell, the crossover point may be less than 1 h. For the XYZ33 cell type shown in Table E.1, the end of life for a 120-min test by the time-adjusted method would correspond to about one-half degradation and one-half reduced efficiency. This would result in a reasonable level of conservatism for most applications. Consult the battery manufacturer for specific information.

E.3 Capacity calculation examples

E.3.1 General

Application of the formula for capacity calculation in 7.4.3 requires that a published performance rating be established for the actual test time, ta. Where the time increments between published data points are small, it may be possible to use simple interpolation to calculate this rating. Otherwise, it is necessary to construct a graph of the published data. Figure E.1 shows a graphical representation of the data in Table E.1 for the XYZ33 cell type.

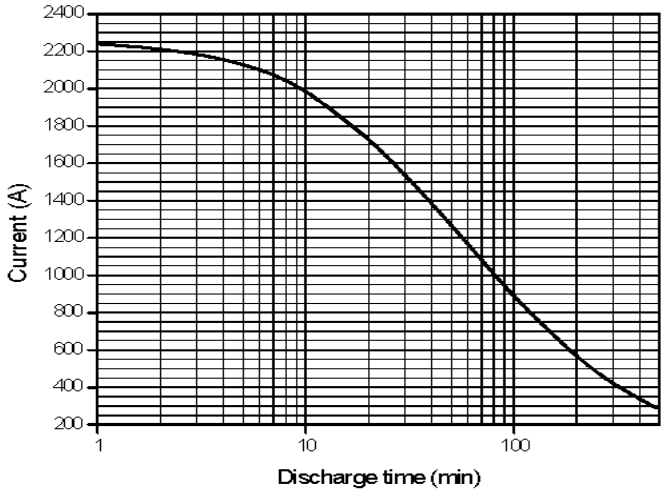

Figure E.1—Rated amperes versus discharge time

Copyright © 2006 IEEE. All rights reserved.

Copyright The Institute of Electrical and Electronics Engineers, Inc.
Provided by IHS under license with IEEE
No reproduction or networking permitted without license from IHS
Not for Resale

E.3.2 Example—15-min duty

An XYZ33 battery has been installed for a 15-min duty. The original sizing included a 1.25 aging factor. The discharge rate for the performance test is therefore 80% of the published 15-min rate of 1840 A or 1472 A. (The test temperature is assumed to be 25 °C, so there is no adjustment for temperature.) After several years of operation, the performance test duration is 18 min.

From Figure E.1, the rated current for 18 min is approximately 1760 A. The calculated capacity is therefore

$$\frac{1472}{1760} \times 100 = 83.6\% \tag{3}$$

In this example, it can be observed that a test time of 15 min will result in a calculated capacity of 80%, because the test rate is 80% of the published 15-min rate.

E.3.3 Interpretation of data from tests carried out at full published rates

It is possible to apply the capacity calculation formula for the rate-adjusted method to other test results, where testing may have been carried out at the full published discharge rate. For example, if a test of an XYZ33 battery at the full 15-min rate of 1840 A yielded a 12-min test time (for which the published current from Figure E.1 is approximately 1925 A), the calculated capacity is

$$\frac{1840}{1925} \times 100 = 95.6\% \tag{4}$$

From the 80% curve, shown in Figure E.2, the XYZ33 is capable of providing approximately 1800 A for 1 min at the end of life. Therefore, a test of an 80% battery at the published 15-min rate of 1840 A will result in a discharge time of less than 1 min. Although this may seem to indicate a catastrophic failure, it is actually a function of the battery's inherent performance capability and its efficiency for short, high-rate discharges.

This calculation demonstrates the large differences between the time-adjusted and rate-adjusted methods for short duration tests. The time-adjusted method gives a result of 80% capacity (12 min as a percentage of 15 min), but three quarters of this capacity shortfall is due to the lower efficiency of the battery at the 12-min rate (E.2). Depending on the design of the cell being tested, the results of a time-adjusted test may be extremely misleading, as demonstrated in Figure E.2. This graph shows the same published rating curve for the XYZ33 cell type and shows the end-of-life condition, corresponding to 80% of the published ratings assuming a 1.25 aging margin.

Copyright © 2006 IEEE. All rights reserved.

Copyright The Institute of Electrical and Electronics Engineers, Inc.
Provided by IHS under license with IEEE
No reproduction or networking permitted without license from IHS
Not for Resale

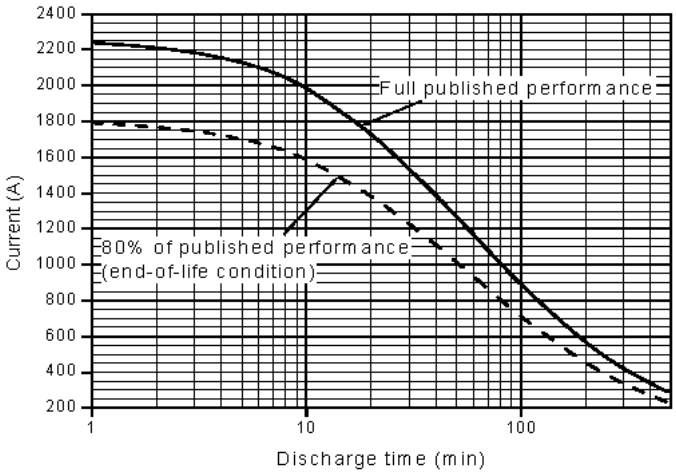

Figure E.2—Comparison of rate- versus time-adjusted end-of-life prediction

E.3.4 Application of rate-adjusted method for other end-of-life conditions

The preceding examples have assumed that a 1.25 aging factor was used in the sizing calculation (IEEE Std 485), which corresponds to an end-of-life condition at 80% of rating. The rate-adjusted method can be equally applied for other end-of-life conditions.

Example 1. If an aging factor of 1.11 was used for sizing a battery for a 15-min duty, the rate used for the rate-adjusted test is 90% of the published 15-min rate. The battery should be replaced when it fails to supply this rate for the full 15 min.

Example 2. If no compensation for aging was included in the sizing calculation, the aging factor is 1.00, and the rate used for the rated-adjusted method is 100% of rating. The battery should be replaced when it can no longer provide this rate for the full published time.

Although these applications of the rate-adjusted method maintain consistency between battery sizing and testing, it should be noted that manufacturers' warranties are generally based on 80% of published performance, and such batteries would not be eligible for warranty adjustment.

Copyright © 2006 IEEE. All rights reserved.

Copyright The Institute of Electrical and Electronics Engineers, Inc.
Provided by IHS under license with IEEE
No reproduction or networking permitted without license from IHS
Not for Resale

Annex F

(informative)

Temperature correction factors

F.1 Temperature time correction factors (Table F.1)

Table F.1—Recommended time correction factors (K_T) for temperatures other than 25 °C (77 °F)

Initial temperature (°C)	Initial temperature (°F)	Temperature correction factor K_T	Initial temperature (°C)	Initial temperature (°F)	Temperature correction factor K_T
4.4	40	0.670	26.1	79	1.007
7.2	45	0.735	26.7	80	1.011
10.0	50	0.790	27.2	81	1.017
12.8	55	0.840	27.8	82	1.023
15.6	60	0.882	28.3	83	1.030
18.3	65	0.920	28.9	84	1.035
18.9	66	0.927	29.4	85	1.040
19.4	67	0.935	30.0	86	1.045
20.0	68	0.942	30.6	87	1.050
20.6	69	0.948	31.1	88	1.055
21.1	70	0.955	31.6	89	1.060
21.7	71	0.960	32.2	90	1.065
22.2	72	0.970	35.0	95	1.090
22.8	73	0.975	37.8	100	1.112
23.4	74	0.980	40.6	105	1.140
23.9	75	0.985	43.3	110	1.162
24.5	76	0.990	46.1	115	1.187
25.0	77	1.000	46.1	120	1.210
25.6	78	1.002	—	—	—

NOTE—The manufacturers recommend that battery testing be performed between 18.3 °C (65 °F) and 32.2 °C (90 °F). These values are average for all time rates between 1 h and 8 h.

Copyright © 2006 IEEE. All rights reserved.

Copyright The Institute of Electrical and Electronics Engineers, Inc.
Provided by IHS under license with IEEE
No reproduction or networking permitted without license from IHS
Not for Resale

F.2 Temperature rate correction factors (Table F.2)

Table F.2— Recommended current rate correction factors (K_C) for temperatures other than 25 °C (77 °F)

Initial temperature (°C)	Initial temperature (°F)	Temperature correction factor K_C	Initial temperature (°C)	Initial temperature (°F)	Temperature correction factor K_C
4.4	40	1.300	26.1	79	0.987
7.2	45	1.250	26.7	80	0.980
10.0	50	1.190	27.2	81	0.976
12.8	55	1.150	27.8	82	0.972
15.6	60	1.110	28.3	83	0.968
18.3	65	1.080	28.9	84	0.964
18.9	66	1.072	29.4	85	0.960
19.4	67	1.064	30.0	86	0.956
20.0	68	1.056	30.6	87	0.952
20.6	69	1.048	31.1	88	0.948
21.1	70	1.040	31.6	89	0.944
21.7	71	1.034	32.2	90	0.940
22.2	72	1.029	35.0	95	0.930
22.8	73	1.023	37.8	100	0.910
23.4	74	1.017	40.6	105	0.890
23.9	75	1.011	43.3	110	0.880
24.5	76	1.006	46.1	115	0.870
25.0	77	1.000	48.9	120	0.860
25.6	78	0.994	—	—	—

NOTE—The manufacturers recommend that battery testing be performed between 18.3 °C (65 °F) and 32.2 °C (90 °F).

Copyright © 2006 IEEE. All rights reserved.

Copyright The Institute of Electrical and Electronics Engineers, Inc.
Provided by IHS under license with IEEE
No reproduction or networking permitted without license from IHS
Not for Resale

Annex G

(informative)

Glossary

For the purposes of this document, the following terms and definitions apply. These and other terms within IEEE standards are found in *The Authoritative Dictionary of IEEE Standards Terms*.[5]

acceptance test (battery): Capacity test made on a new battery to determine that it meets specifications or manufacturer's ratings.

battery cabinet: A structure used to support and enclose a group of cells.

battery rack (lead storage batteries): A structure used to support a group of cells.

capacity test (battery): A discharge of a battery at a constant current or a constant power to a specified voltage.

internal ohmic measurements (battery): The measurement of either internal impedance, conductance, or resistance of battery cells/units.

performance test (battery): A constant current or a constant power capacity test, made on a battery after it has been in service, to detect any change in the capacity.

service test (battery): A special test of the battery's capability, as found, to satisfy the design requirements (battery duty cycle) of the dc system.

terminal connection (battery): Connections made between cells or rows of cells or at the positive and negative terminals of the battery, which may include terminal plates, cables with lugs, and connectors.

unit: Multiple cells in a single jar.

valve-regulated lead-acid (VRLA) cell: A lead-acid cell that is sealed with the exception of a valve that opens to the atmosphere when the internal gas pressure in the cell exceeds atmospheric pressure by a pre-selected amount. VRLA cells provide a means for recombination of internally generated oxygen and the suppression of hydrogen gas evolution to limit water consumption.

[5] IEEE publications are available from the Institute of Electrical and Electronics Engineers, Inc., 445 Hoes Lane, Piscataway, NJ 08854, USA (http://standards.ieee.org/).

Copyright © 2006 IEEE. All rights reserved.

--`,,```,,,,````-`-`,,`,,`,`,,`---
Copyright The Institute of Electrical and Electronics Engineers, Inc.
Provided by IHS under license with IEEE
No reproduction or networking permitted without license from IHS
Not for Resale