IEEE Guide for the Rehabilitation of Hydroelectric Power Plants

IEEE Power Engineering Society

Sponsored by the
Energy Development & Power Generation Committee

1147™

IEEE
3 Park Avenue
New York, NY 10016-5997, USA

22 March 2006

IEEE Std 1147™-2005
(Revision of IEEE Std 1147-1991)

Copyright The Institute of Electrical and Electronics Engineers, Inc.
Provided by IHS under license with IEEE
No reproduction or networking permitted without license from IHS

Not for Resale

--`,,```,,,,````-`-`,,`,,`,`,,`---

and Electronics Engineers, Inc.
IEEE
nitted without license from IHS

Not for Resale

Recognized as an
American National Standard (ANSI)

IEEE Std 1147™ 2005
(Revision of IEEE Std 1147-1991)

IEEE Guide for the Rehabilitation of Hydroelectric Power Plants

Sponsor

Energy Development & Power Generation Committee
of the
IEEE Power Engineering Society

Approved 26 January 2006

American National Standards Institute

Approved 22 September 2005

IEEE-SA Standards Board

--`,,```,,,,````-`-`,,`,,`,`,,`---

Copyright The Institute of Electrical and Electronics Engineers, Inc.
Provided by IHS under license with IEEE
No reproduction or networking permitted without license from IHS

Not for Resale

Abstract: This guide is intended for the hydroelectric power industry to assist hydroelectric power plant owners, operators, and designers in the economic (feasibility) and technical evaluation (electrical aspects) of existing hydroelectric installations for rehabilitation. It addresses conventional hydropower. Portions of this guide are relevant to pumped storage but the unique features of pumped storage are not covered. Feasibility study results may indicate redevelopment of the site. Redevelopment will not be treated in detail in this guide.

This guide covers all generating equipment up to and including the main transformer and typical auxiliary equipment.

Keywords: cable and raceway, compressed air, control, crane, drainage, excitation, fire protection, generator, governor, grounding heating, hydroelectric, lighting, lubrication, machine shop, plant security, protection, rehabilitation, telephone, transformer, turbine, UPS, ventilating and air conditioning, water

---

The Institute of Electrical and Electronics Engineers, Inc.
3 Park Avenue, New York, NY 10016-5997, USA

Copyright © 2006 by the Institute of Electrical and Electronics Engineers, Inc.
All rights reserved. Published 22 March 2006. Printed in the United States of America.

IEEE is a registered trademark in the U.S. Patent & Trademark Office, and is owned by the Institute of Electrical and Electronics Engineers, Incorporated.

National Electrical Safety Code and NESC are both registered trademarks and service marks in the U.S. Patent & Trademark Office, owned by the Institute of Electrical and Electronics Engineers, Incorporated.

National Electrical Code and NEC are both registered trademarks in the U.S. Patent & Trademark Office, owned by the National Fire Protection Association, Incorporated.

Print: ISBN 0-7381-4794-X SH95369
PDF: ISBN 0-7381-4795-8 SS95369

No part of this publication may be reproduced in any form, in an electronic retrieval system or otherwise, without the prior written permission of the publisher.

--`,,```,,,,````-`-`,,`,,`,`,,`---

Copyright The Institute of Electrical and Electronics Engineers, Inc.
Provided by IHS under license with IEEE
No reproduction or networking permitted without license from IHS Not for Resale

IEEE Standards documents are developed within the IEEE Societies and the Standards Coordinating Committees of the IEEE Standards Association (IEEE-SA) Standards Board. The IEEE develops its standards through a consensus development process, approved by the American National Standards Institute, which brings together volunteers representing varied viewpoints and interests to achieve the final product. Volunteers are not necessarily members of the Institute and serve without compensation. While the IEEE administers the process and establishes rules to promote fairness in the consensus development process, the IEEE does not independently evaluate, test, or verify the accuracy of any of the information contained in its standards.

Use of an IEEE Standard is wholly voluntary. The IEEE disclaims liability for any personal injury, property or other damage, of any nature whatsoever, whether special, indirect, consequential, or compensatory, directly or indirectly resulting from the publication, use of, or reliance upon this, or any other IEEE Standard document.

The IEEE does not warrant or represent the accuracy or content of the material contained herein, and expressly disclaims any express or implied warranty, including any implied warranty of merchantability or fitness for a specific purpose, or that the use of the material contained herein is free from patent infringement. IEEE Standards documents are supplied "**AS IS**."

The existence of an IEEE Standard does not imply that there are no other ways to produce, test, measure, purchase, market, or provide other goods and services related to the scope of the IEEE Standard. Furthermore, the viewpoint expressed at the time a standard is approved and issued is subject to change brought about through developments in the state of the art and comments received from users of the standard. Every IEEE Standard is subjected to review at least every five years for revision or reaffirmation. When a document is more than five years old and has not been reaffirmed, it is reasonable to conclude that its contents, although still of some value, do not wholly reflect the present state of the art. Users are cautioned to check to determine that they have the latest edition of any IEEE Standard.

In publishing and making this document available, the IEEE is not suggesting or rendering professional or other services for, or on behalf of, any person or entity. Nor is the IEEE undertaking to perform any duty owed by any other person or entity to another. Any person utilizing this, and any other IEEE Standards document, should rely upon the advice of a competent professional in determining the exercise of reasonable care in any given circumstances.

Interpretations: Occasionally questions may arise regarding the meaning of portions of standards as they relate to specific applications. When the need for interpretations is brought to the attention of IEEE, the Institute will initiate action to prepare appropriate responses. Since IEEE Standards represent a consensus of concerned interests, it is important to ensure that any interpretation has also received the concurrence of a balance of interests. For this reason, IEEE and the members of its societies and Standards Coordinating Committees are not able to provide an instant response to interpretation requests except in those cases where the matter has previously received formal consideration. At lectures, symposia, seminars, or educational courses, an individual presenting information on IEEE standards shall make it clear that his or her views should be considered the personal views of that individual rather than the formal position, explanation, or interpretation of the IEEE.

Comments for revision of IEEE Standards are welcome from any interested party, regardless of membership affiliation with IEEE. Suggestions for changes in documents should be in the form of a proposed change of text, together with appropriate supporting comments. Comments on standards and requests for interpretations should be addressed to:

Secretary, IEEE-SA Standards Board
445 Hoes Lane
Piscataway, NJ 08854
USA

NOTE—Attention is called to the possibility that implementation of this standard may require use of subject matter covered by patent rights. By publication of this standard, no position is taken with respect to the existence or validity of any patent rights in connection therewith. The IEEE shall not be responsible for identifying patents for which a license may be required by an IEEE standard or for conducting inquiries into the legal validity or scope of those patents that are brought to its attention.

Authorization to photocopy portions of any individual standard for internal or personal use is granted by the Institute of Electrical and Electronics Engineers, Inc., provided that the appropriate fee is paid to Copyright Clearance Center. To arrange for payment of licensing fee, please contact Copyright Clearance Center, Customer Service, 222 Rosewood Drive, Danvers, MA 01923 USA; +1 978 750 8400. Permission to photocopy portions of any individual standard for educational classroom use can also be obtained through the Copyright Clearance Center.

Copyright The Institute of Electrical and Electronics Engineers, Inc.
Provided by IHS under license with IEEE
No reproduction or networking permitted without license from IHS
Not for Resale

Introduction

This introduction is not part of IEEE Std 1147-2005, IEEE Guide for the Rehabilitation of Hydroelectric Power.

This introduction provides some background on the rationale used to develop this guide. This information is meant to aid in the understanding and usage of this guide. This version of the guide is a revision of the original published in 1992. The P1147 Working Group reviewed the original guide and revised it by adding new sections on plant staffing and cold weather. The working group also revised the clause on governors, excitation systems, and transformers to enhance them with the most current experience of the working group. Bibliographic references were added and the entire guide was reorganized to conform with the format of the latest IEEE Style Manual. Numerous editorial changes and minor technical improvements were done to enhance clarity and understanding.

This document is a guide for the hydroelectric power industry to assist hydroelectric power plant owners, operators and designers in the economic (feasibility) and technical evaluation (electrical aspects) of existing hydroelectric installations for rehabilitation. Feasibility study results may indicate redevelopment of the site. Redevelopment will not be treated in detail in this guide.

The guide is intended to be used as a reference document for practicing engineers in the hydroelectric power industry.

Owners of hydroelectric power plants have four options to consider after evaluating the performance and operation of plants and individual units in the plant. These options are:

a) Retirement
b) Continue operation as-is
c) Redevelopment
d) Rehabilitation

The first two options are self-explanatory. Option c), redevelopment, involves the construction of an essentially new plant by replacement of all or a major part of the plant equipment and structures in order to make optimum use of the hydro resource.

This guide will address option d), rehabilitation. Rehabilitation should result in extended life, improved performance, increased reliability, increased availability, reduced maintenance, and improved operations. This guide covers all generating equipment up to and including the main transformer and typical auxiliary equipment.

All aspects of the power plant should be considered for rehabilitation including the typical structural, electrical, and mechanical systems shown in Figure 1. For example, improved performance can be achieved by replacement of the turbine runner with a modern design, or by upgrading the generator or improving auxiliary support systems. Increased reliability, reduced maintenance, and improved operations can be achieved by rehabilitation of appurtenant electrical equipment such as exciters, regulators, governors, transformers, and control systems. These and related subjects are addressed in this guide.

Although this document covers civil, structural, mechanical, and hydraulic aspects of a hydroelectric power plant, they are not covered in great detail. The intent is to provide sufficient information from these other disciplines to assist the reader of this document in the understanding of how the electrical aspects relate to or are affected by these other features.

As an historical note, the initial first drafts of this guide were coordinated with the ASCE Hydro Power Development Committee and the ASME Hydro-Power Technical. During the latest revision of the guide, it

Copyright © 2006 IEEE. All rights reserved.

Copyright The Institute of Electrical and Electronics Engineers, Inc.
Provided by IHS under license with IEEE
No reproduction or networking permitted without license from IHS
Not for Resale

was reviewed and commented upon by the ASME Hydropower Technical Committee (HPTC). The Working Group would like to thank the HPTC for their time and helpful contributions made to this guide.

This guide addresses conventional hydropower. Portions of this guide are relevant to pumped storage, but the unique features of pumped storage are not covered in the guide.

The plant owner should be aware of current safety codes and standards during the plant assessment and rehabilitation.

The plant owner should be aware that the rehabilitation of his plant may require the need for amending the license with the appropriate regulating agency. The owner should also investigate historical preservation and environmental regulations that may impact the rehabilitation program.

The bibliography is a listing of industry standards, recommended practices, and guides that may be used as a resource by the engineer engaged in power plant rehabilitation. The review of those documents that apply to the desired area of rehabilitation is encouraged. The listing may not be the most recent edition but is meant to be an aid in starting the review process. If the referenced publications are superseded by an approved revision, the revision shall apply.

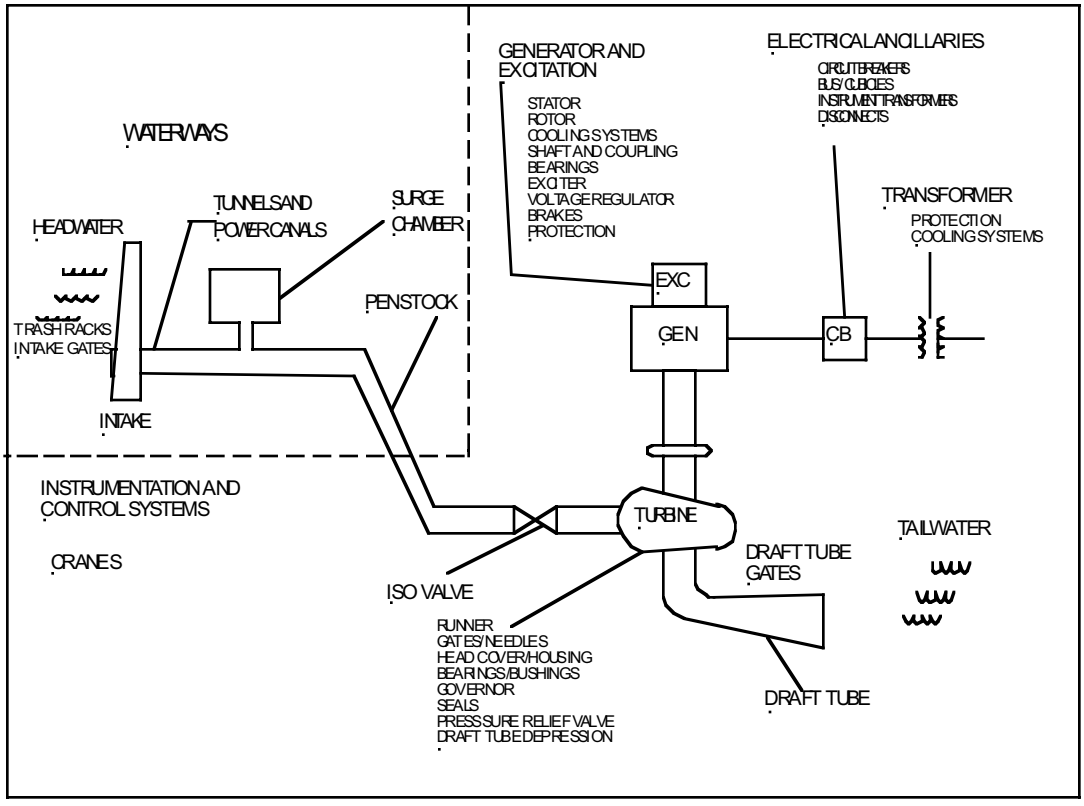

Figure 1—Typical hydroelectric power plant systems

Copyright © 2006 IEEE. All rights reserved.

Copyright The Institute of Electrical and Electronics Engineers, Inc.
Provided by IHS under license with IEEE
No reproduction or networking permitted without license from IHS
Not for Resale

Notice to users

Errata

Errata, if any, for this and all other standards can be accessed at the following URL: http://standards.ieee.org/reading/ieee/updates/errata/index.html. Users are encouraged to check this URL for errata periodically.

Interpretations

Current interpretations can be accessed at the following URL: http://standards.ieee.org/reading/ieee/interp/index.html.

Patents

Attention is called to the possibility that implementation of this standard may require use of subject matter covered by patent rights. By publication of this standard, no position is taken with respect to the existence or validity of any patent rights in connection therewith. The IEEE shall not be responsible for identifying patents or patent applications for which a license may be required to implement an IEEE standard or for conducting inquiries into the legal validity or scope of those patents that are brought to its attention.

Copyright © 2006 IEEE. All rights reserved.

Copyright The Institute of Electrical and Electronics Engineers, Inc.
Provided by IHS under license with IEEE
No reproduction or networking permitted without license from IHS
Not for Resale

Participants

The Working Group on Hydroelectric Power Plant Rehabilitation (P1147) was originally formed at the 1986 Summer Power Meeting. Its members represented a cross-section of the hydroelectric power industry at that time that included power plant owners, consulting engineers, and equipment manufacturers.

The persons listed below were members of the original Working Group:

S. R. Brockschink, *Chair*

F. L. Brennan
E. Bilstein
H. Butz
H. E. Church
R. F. Cleven
J. Coyne
R. S. Coleman
H. R. Davis
R. A. Dent
D. L. Evans
J. H. Gurney
R. D. Handel
R. E. Howell
P. S. Johrde
J. H. Jones
R. Karlicek
D. L. Kornegay
J. E. LeClair
S. O. Lindstroen
D. R. McCabe
P. Micale
A. Mickevicius
D. McLaren
G. D. Osburn
D. J. Parker
L. Pereira
J. Quinn
D. B. Seely
A. Tseng
K. Vik
B. Zarlenga

The persons listed below are the members of the Working Group that revised the 1992 guide:

Steven R. Brockschink, *Chair*

Dave Apps
Horst Butz
Don Evans
Russ Fostniak
Tony Griffiths
Randy Groves
Jim Gurney
Bob Handel
Bob Howell
Dave Kornegay
Larry Long
Paul Micale
Hans Naeff
Dave Parker
Bernard Poulin
Jack Quinn
Doug Seely
Phil Spotts
Winfried Stach
Bill Terry
John Yale
Jerry Gibson
Matthew Davis
Terry Deckman
Jay Anders
George Girgis
Tommy McEntyre
Chris Shultz
Brent Zarlenga

The following members of the ASME Hydropower Technical Committee contributed to this guide:

D. Jones
J. Kerr
S. Peabody
J. Sinclair
T. Spicher

Copyright © 2006 IEEE. All rights reserved.

Copyright The Institute of Electrical and Electronics Engineers, Inc.
Provided by IHS under license with IEEE
No reproduction or networking permitted without license from IHS
Not for Resale

The following members of the individual balloting committee voted on this standard. Balloters may have voted for approval, disapproval, or abstention.

William Ackerman
Jay Anders
Sabir Azizi-Ghannad
Michael Baldwin
William Bartley
Thomas Bishop
Steven Brockschink
William Cantor
Tommy Cooper
Matthew Davis
Guru Dutt Dhingra
Jerome DiSciullo
Neal Dowling
James Edmonds
Amir El-Sheikh
Gary Engmann
Jorge Fernandez-Daher
Rabiz Foda
Russ Fostiak
Trilok Garg
Randall Groves
Bal Gupta
James Gurney
Fhomas Hammons
Robert Handel
William Hopf
Edward Horgan , Jr.
David W. Jackson
Reinhard Joho
Innocent Kamwa
David Kornegay
David Krause
Lawrence Long
Gregory Luri
Don McLaren
John Merando
James Michalec
Gary Michel
Krste Najdenkoski
Nils Nilsson
Bernard Poulin
Madan Rana
Lori Rux
Douglas Seely
Chris Shultz
Winfried Stach
Gregory Stone
James Stoner
William Terry
Malcolm Thaden
James Timperley
James Wilson
John Yale
Hugh Zhu
Ahmed Zobaa

Copyright © 2006 IEEE. All rights reserved.

Copyright The Institute of Electrical and Electronics Engineers, Inc.
Provided by IHS under license with IEEE
No reproduction or networking permitted without license from IHS
Not for Resale

When the IEEE-SA Standards Board approved this standard on 22 September 2005, it had the following membership:

Steve M. Mills, *Chair*
Richard H. Hulett, *Vice Chair*
Don Wright, *Past Chair*
Judith Gorman, *Secretary*

Mark D. Bowman
Dennis B. Brophy
Joseph Bruder
Richard Cox
Bob Davis
Julian Forster*
Joanna N. Guenin
Mark S. Halpin
Raymond Hapeman
William B. Hopf
Lowell G. Johnson
Herman Koch
Joseph L. Koepfinger*
David J. Law
Daleep C. Mohla
Paul Nikolich
T. W. Olsen
Glenn Parsons
Ronald C. Petersen
Gary S. Robinson
Frank Stone
Malcolm V. Thaden
Richard L. Townsend
Joe D. Watson
Howard L. Wolfman

*Member Emeritus

Also included are the following nonvoting IEEE-SA Standards Board liaisons:

Satish K. Aggarwal, *NRC Representative*
Richard DeBlasio, *DOE Representative*
Alan H. Cookson, *NIST Representative*

Michael Fisher
IEEE Standards Project Editor

Copyright © 2006 IEEE. All rights reserved.

Copyright The Institute of Electrical and Electronics Engineers, Inc.
Provided by IHS under license with IEEE
No reproduction or networking permitted without license from IHS
Not for Resale

Contents

1. Overview 1

1.1 Scope 1
1.2 Purpose 1

2. Normative references 1

3. Definitions 2

4. General assessment considerations 2

4.1 General conditions for rehabilitation 2
4.2 Systems approach to rehabilitation 7
4.3 Feasibility study 8
4.4 Plant staffing assessment 9

5. Rehabilitation of waterways 10

5.1 General 10
5.2 Leakage losses 10
5.3 Head (hydraulic) losses 11
5.4 Fishery considerations 12
5.5 Water quality 12
5.6 Cold weather 12

6. Equipment affected by rehabilitation 13

6.1 General 13
6.2 Turbines 13
6.3 Governors 15
6.4 Generators 16
6.5 Excitation systems 24
6.6 Generator main leads and switchgear 26
6.7 Generator neutral grounding equipment 26
6.8 Main transformers 27
6.9 Control and instrumentation equipment 28
6.10 Electrical equipment protection 29
6.11 Auxiliary power equipment 30
6.12 Batteries, chargers, and dc distribution equipment 30
6.13 Emergency power equipment 31
6.14 Uninterruptible power supply (UPS) 32
6.15 Lighting 32
6.16 Water systems 33
6.17 Station drainage 35
6.18 Grounding system 35
6.19 Cables and raceways 36
6.20 Heating, ventilating, and air conditioning systems 37
6.21 Fire protection 38
6.22 Compressed air system 39
6.23 Cranes 40
6.24 Lubrication and insulating oil purification equipment 40

--`,,```,,,,````-`-`,,`,,`,`,,`---

Copyright © 2006 IEEE. All rights reserved.

Copyright The Institute of Electrical and Electronics Engineers, Inc.
Provided by IHS under license with IEEE
No reproduction or networking permitted without license from IHS

Not for Resale

6.25 Telephone or other communication equipment 41
6.26 Plant security 41
6.27 Machine shop 41

Annex A (informative) Bibliography 42

Copyright © 2006 IEEE. All rights reserved.

Copyright The Institute of Electrical and Electronics Engineers, Inc.
Provided by IHS under license with IEEE
No reproduction or networking permitted without license from IHS
Not for Resale

`,,```,,,,````-`-`,,`,,`,`,,`---

and Electronics Engineers, Inc.
IEEE
itted without license from IHS

Not for Resale

IEEE Guide for the Rehabilitation of Hydroelectric Power Plants

1. Overview

This guide contains clauses for references and definitions. Clauses on assessing conditions and rehabilitating waterways and equipment are included. A bibliography is attached as an informative annex, organized into equipment subgroups.

1.1 Scope

This guide describes alternatives that hydroelectric power plant owners should consider when undertaking a rehabilitation of the facilities. It is useful in ensuring that potential improvements are not overlooked in the owner's process.

1.2 Purpose

This guide is directed to the practicing engineer in the field of hydroelectric power for the purpose of providing guidance in the decision-making processes and design for rehabilitation of hydroelectric power plants.

2. Normative references

The following referenced documents are indispensable for the application of this document. For dated references, only the edition cited applies. For undated references, the latest edition of the referenced document (including any amendments or corrigenda) applies.

ANSI C50.10-1990, American National Standard for Rotating Electrical Machinery—Synchronous Machines.[1]

[1]ANSI publications are available from the Sales Department, American National Standards Institute, 11 West 42nd Street, 13th Floor, New York, NY 10036, USA (http://www.ansi.org/).

Copyright © 2006 IEEE. All rights reserved.

Copyright The Institute of Electrical and Electronics Engineers, Inc.
Provided by IHS under license with IEEE
No reproduction or networking permitted without license from IHS
Not for Resale

ASME PTC 29, Speed-Governing Systems for Hydraulic Turbine-Generator Units.[2]

IEEE Std 125™, IEEE Recommended Practice for Preparation of Equipment Specifications for Speed-Governing of Hydraulic Turbines Intended to Drive Electric Generators[3].[4],

IEEE Std 810™, IEEE Standard for Hydraulic Turbine and Generator Integrally Forged Shaft Couplings and Shaft Runout Tolerances.

IEEE Std 1010™, IEEE Guide for Control of Hydroelectric Power Plants.

IEEE Std 1020™, IEEE Guide for Control of Small Hydroelectric Power Plants.

IEEE Std 1095™, IEEE Guide for Installation of Vertical Generators and Generator/Motors for Hydroelectric Applications.

IEEE Std 1207™, IEEE Guide for the Application of Turbine Governing Systems for Hydroelectric Generating Units.

IEEE Std 1248™, IEEE Guide for the Commissioning of Electrical Systems in Hydroelectric Power Plants.

IEEE Std 1249™, IEEE Guide for Computer-Based Control for Hydroelectric Power Plant Automation.

3. Definitions

For the purposes of this guide, the following terms and definitions apply. *The Authoritative Dictionary of IEEE Standards Terms* [B146][5] should be referenced for terms not defined in this clause.

3.1 rehabilitation: The process of programmatically replacing, modifying, or adding equipment to an existing hydro facility to restore functionality of safety, reliability, maintainability, or operability of the facility.

3.2 upgrade: The process of replacing, modifying, or adding equipment to an existing hydro facility to improve equipment performance.

3.3 uprate: The process of increasing equipment rating (capacity) or improving equipment performance (efficiency) to increase overall energy production.

4. General assessment considerations

4.1 General conditions for rehabilitation

Rehabilitation of equipment in a hydroelectric power plant may be appropriate when any of the following conditions prevail:

a) Declining unit availability
b) Potential for restored or improved performance

---

[2]ASME publications are available from their catalog web site at http://members.asme.org/catalog/.

[3]IEEE publications are available from the Institute of Electrical and Electronics Engineers, 445 Hoes Lane, P.O. Box 1331, Piscataway, NJ 08855-1331, USA (http://standards.ieee.org/).

[4]The IEEE standards or products referred to in this clause are trademarks of the Institute of Electrical and Electronics Engineers, Inc.

[5]The numbers in brackets correspond to those of the bibliography in Annex A.

--`,,```,,,,````-`-`,,`,,`,`,,`---
Copyright © 2006 IEEE. All rights reserved.
Copyright The Institute of Electrical and Electronics Engineers, Inc.
Provided by IHS under license with IEEE
No reproduction or networking permitted without license from IHS
Not for Resale

c) Changes in plant or unit operating conditions
d) Opportunity for plant automation
e) Reduced output capabilities
f) Failure of major equipment
g) Inability to withstand the effects of seismic forces during earthquakes
h) No spare parts available
i) Increasing maintenance costs
j) High operating costs
k) Undesirable safety and security concerns

It is desirable to perform an appraisal of each of the above as they apply to all major equipment in hydroelectric power plants. Inspection, testing, and continuous monitoring of significant data where available is an integral part of this appraisal process. A tabulation of suggested items to be evaluated is given in Table 1.

Copyright © 2006 IEEE. All rights reserved.

Copyright The Institute of Electrical and Electronics Engineers, Inc.
Provided by IHS under license with IEEE
No reproduction or networking permitted without license from IHS Not for Resale

Table 1 lists items that should be considered in the assessment of equipment. The left column lists general items and the column at the right gives more specific factors to be considered.

Table 1—List of items for assessment of plant and equipment

Specific item	Factors
Operating conditions Availability of water Addition of new unit(s) Need for increased capacity	Changes in water flows A new unit at a plant could relegate operation of existing units to short-time peaking, which could affect the benefits of rehabilitation of the existing units. Increasing capacity by uprating is cost effective
Review operating records Plant/unit flows, head and energy production. Forced outages. Equipment operating data.	Look for trends that could indicate degradation in performance such as reduction in head due to high intake and penstock losses, or less energy produced by the same water. Reveals major problem areas, types of outages, frequency and duration. Loadings, flows, temperatures, cooling— all of which have an effect on life expectancy.
Review maintenance records Past and present maintenance programs. Repairs—what and when.	Reveals relationship between condition and equipment maintenance practices. Identifies problem areas if repairs are frequent. For example, frequent turbine runner repairs due to cavitation, or changed hydraulic conditions, could indicate need to change runner design or material. Frequent generator thrust bearing repairs that could mean a high pressure lubrication system should be added or an effort made to reduce the hydraulic thrust. Frequent unavailability of generating unit due to failures in the existing automation system, the sensors, or instrumentation may indicate the end of lifetime of the relevant component and/or system.
Equipment design data Age and Materials Design Performance and Ratings	Can be useful in predicting expected life. Is original design consistent with present use?
Drawings and documentation	Drawings and documentation should be complete and accurate.
Inspection of equipment General Condition Obvious Problem Areas	Such as dirty, corroding, leaks, cracks, cavitation, loose wedges, and tape separation. Such as leaks, vibration, high operating temperatures and lack of cooling.
Equipment tests Test Data	Comparison of previous test data with new tests that can identify degradation in performance and reliability. Some tests are: Turbine— efficiency tests, relative or absolute Generator— insulation tests Switchgear— insulation tests Transformer— oil tests for degradation
Personnel Safety	Can the equipment be inspected, handled and maintained safely and does it fulfill current safety requirements?
Environmental Impacts	Pollutants Hazardous materials

--`,,```,,,,````-`-`,,`,,`,`,,`---

Copyright © 2006 IEEE. All rights reserved.

Copyright The Institute of Electrical and Electronics Engineers, Inc.
Provided by IHS under license with IEEE
No reproduction or networking permitted without license from IHS Not for Resale

4.1.1 Declining unit availability

Declining unit availability causes increased costs and reduced revenues and should be evaluated. Plant records need to be examined to identify the following conditions that are indicative of poor unit availability:

a) The end-of-life expectancy of the individual components should be analyzed and the expected timing, cost of replacement, and availability of spares should be included in the analysis.

b) Outages and their frequency should be analyzed to determine the root cause and corrective actions that should be undertaken to improve performance.

c) Maintenance work that is judged to be over and above routine maintenance activity necessary to keep the equipment in reasonable operating condition that can contribute to decreased unit availability. Causes for the increased maintenance above the norm should be identified for possible remedial action.

4.1.2 Potential for restored or improved performance

The performance of major equipment was determined by the technology and state-of-the-art technology available at the time that the equipment was designed and built. Significant advances in engineering, materials, and manufacturing have occurred so that the hydraulic turbines, generators, and related equipment can be rehabilitated to obtain important and, in some cases, significant gains in performance and capacity.

Equipment, such as turbine runners and related equipment, degrades over time and thus has less output and reduced performance.

4.1.3 Changes in plant or unit operating conditions

Hydroelectric generating equipment is designed to provide optimum performance for a specific set of operating conditions. These operating conditions often can change with time which will justify rehabilitation of the equipment to improve its performance for a new set of operating conditions. Although rehabilitation is traditionally undertaken to enhance plant power output or capacity, recent industry developments regarding the power plant interface with the transmission system requires additional considerations. As an example, in North America, the power plant interface with the transmission system may be controlled by an independent system operator (ISO) or a regional transmission organization (RTO). These entities may require that the plant contractually supply reactive power (VAR) support or provide spinning reserve capabilities to the power system. This could be implemented by providing synchronous condensing capability to existing units. In return for providing these capabilities to the ISO or RTO, the power plant operator may realize significant revenue streams from the RTO or ISO operator for these ancillary services. The following are examples of changed plant operating conditions:

a) Changes in water usage and availability for power generation can result in the need to increase the power output of the turbine, generator and associated equipment.

b) Changes in the method of operation of the unit can result in the need for higher outputs.

c) Ancillary requirements in terms of reactive power support may require a coordinated approach for assessing the unit's reactive power output capabilities including a re-evaluation of the generator reactive power rating, the generator excitation system in terms of performance and rating, and the generator step-up (GSU) transformer rating in units of MVA, voltage and high-voltage tap ratings.

d) Changes in the environmental requirements to the plant may require turbine runner changes or measures to control and improve the dissolved oxygen in the river and fish passage through the turbine.

e) Environmental regulations require different control needs not available in the original equipment.

Copyright © 2006 IEEE. All rights reserved.

Copyright The Institute of Electrical and Electronics Engineers, Inc.
Provided by IHS under license with IEEE
No reproduction or networking permitted without license from IHS
Not for Resale

4.1.4 Plant automation

Plant automation programs that are intended to allow unattended operation of a unit or to convert from local to offsite control often require extensive modifications to equipment. Although plant automation is beyond the scope of this guide, it is recommended that automation rehabilitation feasibility studies include a review of offsite control and plant automation (see IEEE Std 1249[6]).

4.1.5 Reduced output capabilities

Major equipment that have restrictions that prevent operation of the unit at its full capacity or curtail its energy production due to changes in plant or equipment conditions are candidates for rehabilitation.

The following are examples of operating restrictions:

a) Severe restrictions in the ability for the turbine to pass the flow.

b) Excessive vibration due to “rough zones” in the hydraulic operation due to a change in head or tail-water elevation or a severely cavitated and unrepairable runner.

c) Remedial repairs limiting equipment operation. An example would be cutting out stator coils.

d) Over time the degradation of the equipment causes reduced capacity.

4.1.6 Failure of major equipment

Unscheduled outages due to failure of major equipment during operation invariably result in substantial economic losses especially if water cannot be stored or diverted to other units. When the severity of the failure results in a prolonged outage, it is appropriate to consider either rehabilitation of the failed equipment as an alternative to repair or a replacement in-kind without an upgrade or uprate. The following examples illustrate where uprating could be considered:

— Failure of a main unit transformer. Procurement of a new transformer that has lower losses and improved through-fault withstand capability, and is designed for current and future operating conditions could be appropriate.

— Failure of a turbine runner such that its repair is not feasible. Upgrading the turbine runner with a new runner design that has improved performance under the current and anticipated operating conditions may be an economically viable step.

— Failure of the generator. Rewinding of the generator to increase the generation capability to better match turbine output is a possibility. However, this may result in a mismatch between the generator output and the generator-step-up transformer rating, which would limit the benefits from the generator rating increase.

4.1.7 Seismic considerations

Plant owner requirements or prevailing building codes may dictate that new equipment installations be capable of meeting more stringent seismic design criteria than the criteria used during initial plant design. In this case, it is appropriate to review the ability of plant structures and equipment to withstand the effects of earthquakes. This involves establishing ground motion levels (peak horizontal and vertical acceleration and velocity) for the maximum credible earthquake (MCE) for the area, and then assessing the ability of plant structures and equipment to withstand these levels. Assessments can be made using a combination of computerized (dynamic) and manual analysis techniques and physical inspections.

The following are examples of modernizations to improve seismic withstand:

a) Automatic flow shutoff by unit shutdown or intake gate closure initiated by seismic triggers.

[6]Information on references can be found in Clause 2.

Copyright © 2006 IEEE. All rights reserved.
Copyright The Institute of Electrical and Electronics Engineers, Inc.
Provided by IHS under license with IEEE
No reproduction or networking permitted without license from IHS
Not for Resale

b) Anchoring of critical equipment necessary for safe and reliable shutdown, such as, battery racks, governor equipment, control and protection switchboards.

c) Strengthening of control and protection switchboards to prevent buckling or collapse.

d) Reinforcing of structures near critical equipment to prevent damage from falling debris.

e) Installation of flexible isolation sections in place of rigid pipe for governor pressure piping.

f) Modifications to control and protection circuits to ensure safe shutdown in the event of failure of dc power supply during a seismic event.

4.2 Systems approach to rehabilitation

In 4.1, general conditions were reviewed that can lead to rehabilitation of major equipment. It is important to realize that changes in external system parameters or criteria, or the rehabilitation of one major piece of equipment can have a significant impact on other systems in the plant. A systems approach is needed to fully evaluate most rehabilitation. An example is outlined in the EPRI *Hydropower Plant Modernization Guide* [B149].

To illustrate this point, consider a case where a turbine runner is uprated to produce greater power output with improved efficiency. Such improvements are not uncommon but the impact on other parts of the plant should be considered, such as:

a) Increasing water flow through the turbine can have an impact on the penstock in that larger flows will produce higher pressure transients due to load acceptance and rejection.

b) Changes in governor stroke and timing and changes in pressure regulator valves (if applicable) are often required.

c) The increase in turbine power requires a design assessment of such items as the shaft coupling, turbine shaft, rotor structure, and generator structure to safely transmit or handle the increased torque.

d) An increase in turbine output requires a design assessment of the generator stator windings, stator core, and field to determine their ability to generate the increased power and the possible need to uprate the generator as well.

e) The excitation system's ability is to provide the required field current and the necessary voltage control, and to meet reactive power requirements should also be determined.

f) The capability of the generator leads and circuit breaker (if applicable) to carry the increased current should be evaluated.

g) The main unit transformer and associated transmission lines should be evaluated to determine that they can carry the increased power.

h) The rating of the current transformers and associated metering and protective equipment should be evaluated based on the upgraded capacity of the generator. Generator protection settings should be reassessed.

i) The generator cooling system and components should be evaluated for adequacy.

j) Environmental impacts.

Because rehabilitation of major equipment in the plant can involve prolonged unit outages, the impact of the outage on the water system and on the electrical power system should also be considered. Two examples of the impact due to outages are:

— A prolonged unit outage for rehabilitation could mean that water must be stored or diverted to other units or plants. If this cannot be accomplished, then the lost power and energy production should be taken into consideration as an economic impact on the feasibility of the rehabilitation.

— A prolonged unit outage also results in the loss of revenue and generating capacity on the electrical power system.

Copyright © 2006 IEEE. All rights reserved.

Copyright The Institute of Electrical and Electronics Engineers, Inc.
Provided by IHS under license with IEEE
No reproduction or networking permitted without license from IHS Not for Resale

The previous examples illustrate the importance of planning major rehabilitation programs so that they have a minimum impact on the water flow and power systems associated with the plant.

4.3 Feasibility study

4.3.1 Introduction

A feasibility study of the various alternatives should be undertaken to determine the most favorable course of action for plant rehabilitation. Consideration of project staffing, operation, and maintenance of the plant should be included in the study. Alternatives include repair, replacement, rehabilitation, modernization, and automation as well as the addition of functionally new equipment. The alternatives are then studied and compared for performance and economic justification and a final decision is made.

The feasibility or benefit-to-cost analysis may be very simple or quite sophisticated depending on the size of the project and the number and complexity of optional features involved. The study evaluates the various options, most often using a present-worth computation, to include those features that show favorable economics and to delete those that fail the economic justification.

The feasibility analysis is essential to the development of a concise scope of work. The discussion in this subclause does not discuss the details of making the feasibility study, but it does emphasize the need for one.

4.3.2 Anticipated benefits

4.3.2.1 Increased plant output

The means of increasing output, either capacity or energy, covers practically every aspect of the plant. Some modifications for increased output cost more than others, and some have greater benefits than others. The need, during the feasibility study, is to determine those modifications that are economically justifiable. The present-day expense of modernization should be balanced against the long-term gains. For example, it may seem as if it is a significant expense to rewind a forty-year-old stator, but if the gain in output, which may be small, is evaluated over the future life of the plant, it may be a highly desirable expenditure. Similarly, increased operating head or water storage should be evaluated with the intent of increasing plant output or load factor.

4.3.2.2 Reduced labor requirement

When evaluating rehabilitation programs, substantial returns often emerge after an analysis of the labor requirements. A “before and after” review of personnel requirements can show dramatic economic benefits. This is particularly evident in those cases where 24-hour staffed positions can be eliminated or reduced to one shift requirements.

4.3.2.3 More efficient water use

Improved designs of equipment and systems offer an opportunity to make more efficient use of the water. Increased efficiency in the hydraulic turbine equipment and water passages is an area that should be subjected to critical review with the intention of obtaining long term gains. Even small efficiency gains turn into substantial economic benefits when evaluated over the life of the plant.

4.3.2.4 Improved operation and increased availability

Benefits can be realized by reducing the forced outage rate and increasing the unit availability thereby improving plant reliability. Fiscal values can be assigned to these improvements and used in the feasibility analysis when weighing costs against benefits.

Copyright © 2006 IEEE. All rights reserved.
Copyright The Institute of Electrical and Electronics Engineers, Inc.
Provided by IHS under license with IEEE
No reproduction or networking permitted without license from IHS Not for Resale

Operation can be improved by incorporating modern control schemes, reducing the number of control devices, eliminating unnecessary recording functions, or similar methods. Unit availability can be increased by replacing or refurbishing equipment that has become or will soon become failure prone. Reliability improvements can be equated to better operation and result in improved revenues for the plant. A plant condition monitoring system can provide the means for accurately monitoring and documenting plant equipment and plant system conditions allowing the change from event-driven maintenance to a condition-based maintenance.

4.3.2.5 Reduced operating and maintenance costs

The use of supervisory control and automated data acquisition can reduce many of the manual operations that are normally associated with the older plants. Also, improved monitoring of operating and maintenance data can assist in determining maintenance requirements and reduce forced outages.

4.3.3 Costs

Feasibility studies cover the economic costs associated with rehabilitation. The costs fall into several categories. The feasibility stage of hydroelectric plant rehabilitation often requires testing of the equipment, water passage losses, and river levels and flows to confirm the existing conditions prior to plant modifications. The establishment of benchmark values is necessary before an economic evaluation can be completed and a program defined.

4.3.3.1 Direct costs

a) Cost to purchase and install new equipment or modify existing equipment
b) Costs for planning, engineering, purchasing, environmental studies, factory test witnessing, on-site commissioning, training, etc.
c) Field supervision and inspection

4.3.3.2 Indirect costs

a) Office supervision
b) Engineering positions and support such as copy machines, supplies, lights, rent, telephone, and computers
c) General management

4.3.3.3 Investment related costs

a) Depreciation and salvage
b) Return on capital
c) Forgone revenue during outages caused by the rehabilitation program
d) Taxes
e) Insurance
f) Cost of funds used during construction

4.4 Plant staffing assessment

The rehabilitation of major hydroelectric power plant equipment or systems should include an evaluation of the existing staffing necessary to operate and maintain the plant. The replacement or rehabilitation of high-maintenance equipment and systems will often reduce the amount of time and effort expended by the staff in operating and maintaining the equipment to the point where staff reductions may be warranted.

Copyright © 2006 IEEE. All rights reserved.

Copyright The Institute of Electrical and Electronics Engineers, Inc.
Provided by IHS under license with IEEE
No reproduction or networking permitted without license from IHS
Not for Resale

When equipment and systems are replaced with newer technology it can result in a requirement for skilled people that are not presently available in the operation and maintenance staff. Retraining of existing staff or the hiring of specially skilled individuals may be necessary if it is decided to avoid using resources outside the organization.

A major rehabilitation of a hydroelectric power plant is an opportune time to evaluate current staffing and skills based on the aforementioned considerations.

5. Rehabilitation of waterways

5.1 General

Energy losses in the hydroelectric power plant's waterways system are due to wasted water flow and loss of head. These losses are associated with the plant's operating practices and with physical equipment included in the plant's waterways systems. A brief discussion of these losses is contained herein. The discussion does not attempt to address possible improvements and their implementation unless significant electrical content is involved. Appropriate civil and mechanical engineering society (ASCE and ASME) guides can be referred to for consideration and in-depth treatment of rehabilitation of many of these components. Items such as spillway and intake gates are of paramount concern to a power plant owner since major plant and facility safety issues are involved. The *Guide to Hydropower Mechanical Design* [B145] is a good reference for mechanical systems and equipment.

5.2 Leakage losses

Leakage from various power plant components decreases available flow to the turbines. The leakage is most often minor in nature; an industry survey (EPRI report EM-2407 [B148]) estimates the average leakage loss at a typical plant at less than 0.5 percent of available stream flow. Leakage, for purposes of classification, can originate from intake gate systems, flood control systems, and structural sources such as foundations, power tunnels, penstocks including isolating valves, and turbine units. Leakages from sources up to the turbine shutoff valve, together with causes, are discussed briefly in the following subclauses.

5.2.1 Intake gate systems

5.2.1.1 Gate seals

The intake gates may lack gate seals or have defective seals. The resulting leakage can create significant problems during unit shutdown for turbine inspection and maintenance. Additional pumping and associated electrical power supply to unwater equipment for maintenance or rehabilitation may be required.

5.2.1.2 Gate position sensor

Miscalibration of, or inherent design limitations of the gate position sensor will give false indication of gate position to the control system resulting in a failure to fully open or close the gate. This can result in an unsafe condition.

5.2.1.3 Gate hoist equipment

Erratic or unpredictable operation of gate hoist equipment can be a cause of gate leakage. If rehabilitation of intake gate systems is being considered, many of the electrical features discussed in 6.23 are applicable to the electrical systems of the gates and hoists.

Copyright © 2006 IEEE. All rights reserved.
Copyright The Institute of Electrical and Electronics Engineers, Inc.
Provided by IHS under license with IEEE
No reproduction or networking permitted without license from IHS Not for Resale

5.2.2 Flood control systems

5.2.2.1 Flashboards

Flashboards, if installed on the spillway are used to increase reservoir capacity and reduce spill from the dam. Flashboards may be susceptible to leakage losses due to combinations of design, construction, operation, or flashboard deterioration.

5.2.2.2 Spillway gates and hoists

Spillway gates and associated hoist systems, position indication systems, and gate seal systems may also contribute to water leakage. If rehabilitation of spillway gate systems is being considered, many of the items discussed in 6.23 are applicable to the electrical systems of the gates and hoists.

5.2.2.3 Spillways

Spillways can contribute to leakage due to deterioration or erosion of the spillway crest.

5.2.3 Structural leakage

In addition to the spillway structure, leakage may occur in dam abutment structures, the foundations of either the dam or the powerhouse, the penstock, the power canal, or the power tunnel.

5.2.3 Non-operating units

De-commissioned units, or units not operating for extended periods, may have leakage from structures previously discussed as well as wicket gates and other turbine parts.

5.3 Head (hydraulic) losses

5.3.1 Trash rack systems

Debris buildup on trash rack systems is a source of hydraulic system loss. Detection systems, where installed, typically measure differential head across the trash rack and are employed to provide remote indication of the accumulation of debris on the intake trash rack for alarm, control, and protection purposes.

5.3.2 Penstock, power canal, and power tunnel

5.3.2.1 Penstocks

Penstocks can be major contributors to power plant hydraulic system losses. Older power plants may employ either wooden or riveted steel penstocks, which are contributors to high head loss. Other sources of hydraulic system losses in the penstock include:

a) Corrosion and accumulation of mineral or organic deposits on the inner surface
b) Sharp penstock radii
c) Penstock reducers
d) Penstock inlet valves and valve bodies or both

5.3.2.2 Power tunnels

Unlined power tunnels used to supply water to the turbines can be sources of high hydraulic system losses. Installation of concrete or steel liners, or painting of existing liners could reduce losses.

Copyright © 2006 IEEE. All rights reserved.

Copyright The Institute of Electrical and Electronics Engineers, Inc.
Provided by IHS under license with IEEE
No reproduction or networking permitted without license from IHS Not for Resale

5.3.3 Tailrace and draft tube

Sources of hydraulic system losses in the tailrace and draft tube include:

a) Obstructions such as rocks or sediment accumulation.
b) Poor flow transition at the end of the tailrace.
c) Civil/structural damage
d) Gate slot design

5.4 Fishery considerations

5.4.1 General

Fish passage systems exist for the purpose of transporting migratory fish around the dam and powerhouse. These systems can address both the fish migrating upstream as well as those migrating downstream resulting in a nearly year-around requirement. The upstream migrant systems contend with transporting the fish over the structure itself. The downstream migrant systems deal with diverting the fish from entering the turbine intake. Rehabilitation in these areas could result in greater efficiency of operation.

5.4.2 Rehabilitation considerations

These fishery systems and equipment typically are requirements that have evolved after the original construction of the hydropower project. The fishery systems usually need electrical power to power auxiliary equipment, which may be required to interlock with the existing control systems. A planned major rehabilitation project is an opportune time to re-evaluate the increased power demands on the station service system due to the added fishery systems. Fishery equipment interlocks for unit-start or unit-stop with existing or replacement unit control systems could also be incorporated into the rehabilitation program.

5.5 Water quality

5.5.1 Tailrace aeration

Tailrace water quality may be a concern. Oxygen depletion in the reservoir has an adverse effect on aquatic life. Aeration of the water is a solution. Depending on the aeration method selected, there may be impacts on future efficiency, auxiliary power systems, or controls.

5.5.2 Temperature control

Water withdrawal from the reservoir for power production is usually made at depth. Therefore, the discharge from the plant has the temperature of the stratified layer of the reservoir from which the withdrawal is made. This discharge may create undesired environmental effects. To mitigate this effect, selective withdrawal structures can be utilized to allow the plant operator to control the withdrawal depth.

5.6 Cold weather

Cold climates and freezing temperatures can cause ice formations on water passages and structures. Ice loading or movement on structures can cause damage. Operating equipment such as spill gates may require heat sources to ensure reliable operation. Ice prevention systems such as electrical heat tracing, compressed air, or physical agitation systems may be used to keep water surfaces clear of ice.

Water level instrumentation may need to be modified to deal with ice. Bubbler systems may be employed where the air flow is sufficient to prevent icing. Ice has a different density than water, so pressure type

Copyright © 2006 IEEE. All rights reserved.
Copyright The Institute of Electrical and Electronics Engineers, Inc.
Provided by IHS under license with IEEE
No reproduction or networking permitted without license from IHS Not for Resale

measurements of level may need to be compensated. Ice bridging may also occur where the water level drops below the actual ice surface.

6. Equipment affected by rehabilitation

6.1 General

Equipment, as a result of its condition, may be a better candidate for full replacement rather than overhaul. If any, or a combination of, the following conditions exist, it is recommended that the equipment be replaced in lieu of being overhauled:

a) Physical damage or deterioration
b) History of frequent failure and repair
c) Ratings inadequate for intended machine
d) Ratings inadequate for system conditions
e) Non-compliance with modern safety requirements
f) Unavailability of replacement parts

Furthermore, it is recommended that consideration be given to replacing the equipment on the basis of its age. For example, organic insulation systems gradually deteriorate over a period of time, which may not be identifiable by inspection or non-destructive testing.

If equipment is rehabilitated or replaced, IEEE Std 1248 should be used to commission the equipment.

6.2 Turbines

6.2.1 Introduction

Hydroelectric power plant rehabilitation feasibility studies should include a review of the following major turbine mechanical components, as applicable, in order to determine the necessary scope of work to be carried out:

a) Runner
b) Turbine shaft
c) Turbine shaft bearing(s)
d) Turbine regulating systems including wicket gates, runner blades, deflectors, needle valves, linkages (including bushings), and servomotors
e) Shaft packing box or mechanical seal
f) Head cover and bottom ring
g) Bearing lubrication and cooling systems
h) Stay vanes
i) Draft tube
j) Turbine shutoff valve
k) Pressure relief (regulator) valve
l) Wearing rings and wearing plates
m) Vacuum breaker valves
n) Discharge ring
o) Turbine aeration

Copyright © 2006 IEEE. All rights reserved.

Copyright The Institute of Electrical and Electronics Engineers, Inc.
Provided by IHS under license with IEEE
No reproduction or networking permitted without license from IHS
Not for Resale

The following discussion addresses the electrical auxiliaries that support the previously listed mechanical components and systems.

6.2.2 Turbine protection and control instrumentation

The application of protection and control instrumentation used on the turbine will vary primarily with the type and size of the rehabilitated turbine. The selection of instrumentation employed on the turbine should be based on the following criteria:

a) Reliability
b) Ruggedness
c) Sensitivity
d) Accuracy

The functional requirements for the instrumentation, such as switch contact rating or type of resistance temperature detectors (RTD), should be coordinated with the unit's control equipment. Protection and control of the unit is referenced in IEEE Std 1010. The amount of equipment needed to protect and control a turbine and auxiliary equipment will vary based on the size and type of turbine considered. Traditionally turbines have mostly been equipped with limit, pressure, and flow switches. Replacing those switches with analog sensors offers real-time monitoring of relevant parameters.

6.2.3 Turbine greasing equipment

Adequate lubrication of the turbine mechanical components is necessary to ensure longevity of moving components such as wicket gate stems and linkages and auxiliary components like the wicket gate ring lock. Primarily, larger hydro turbine installations or plants that run unattended can justify the added costs of an automatic turbine greasing system.

The most common form of automatic greasing system is controlled by a series of cams used to control the frequency and duration of greasing for a component. Pressure switches are used to verify the presence of grease in grease lines for equipment that is located furthest away from grease pump.

The addition or rehabilitation of the turbine greasing equipment can affect the size of the motor starter required for the grease pump as well as increase the number of controls that need to be coordinated. The need for a grease lubrication system can be eliminated and the system made environmentally acceptable with the implementation of self-lubricated bushings for the wicket gates and regulating system.

6.2.4 Bearing lubrication system

A properly designed bearing lubrication system is crucial for a reliable and fail-safe operation for both the turbine and generator bearings. A detailed description of the mechanical aspects of the design requirements of the oil system for lubrication is presented in the discontinued ASME standard LOS-5D1 [B144]. For lubricated bearing designs, a thorough investigation should be conducted to verify:

a) Requirement and availability of a reliable (fail-safe) power supply to the lube pump motors.
b) Proper lube pump capacity and motor sizing
c) The need for a lube oil leakage detection system to alarm in the event oil leaks into the cooling water system or leaks out of the bearing lube oil reservoir
d) Associated instrumentation

6.2.5 Shear pin failure equipment

Shear pins or friction couplings are provided on the turbine wicket gate linkages to protect the wicket gate assembly when debris becomes lodged between wicket gate passageways. A shear pin detection system

Copyright © 2006 IEEE. All rights reserved.
Copyright The Institute of Electrical and Electronics Engineers, Inc.
Provided by IHS under license with IEEE
No reproduction or networking permitted without license from IHS Not for Resale

senses when one or more wicket gate shear pins have failed. This condition results in an alarm condition that is used to initiate emergency manual or automatic closure of the intake gate(s) or shutoff valve and shutdown of the turbine. Turbine manufacturers supply several different types of shear pin detection systems that result in the same basic output. The addition of a shear pin detection system can be implemented on Francis or Kaplan turbine designs that utilize a gate operating ring and wicket gate lever linkage arrangement.

The pneumatic type of shear pin detection system may utilize a pressure switch and orifice to detect the flow of air through a broken shear pin. The switch only trips when a sufficient air flow occurs across the supply line orifice. Another type of system utilizes a spring loaded gate linkage on each wicket gate with individual gate linkage switches. The spring loaded linkage system is used on smaller turbines.

6.3 Governors

6.3.1 Introduction

Older governors can be of the mechanical-hydraulic cabinet actuator type. They consist of the governor head (ballhead motor, ballhead, dashpot compensation, gate limit, and speed droop adjusting mechanisms), hydraulic amplification equipment (pilot valve and distributing valve), and oil pressure system (oil pumps, sump, pressure tank and associated controls). The lifetime of some governor components can be less than the lifetime of the associated turbine. The governor should be considered for rehabilitation when it becomes too expensive to maintain, when there are changes in the operational mode of the project, or when improved mechanical protection is required. If a governor is tested to determine its performance, as a consideration for rehabilitation, ASME PTC 29 should be used. Governors become costly to maintain, i.e., frequent adjustment; a high failure rate; or when there are problems with vendor support (spare parts become expensive, difficult to procure or unavailable, or original manufacturer no longer supports the equipment). Operational improvements (faster control, automatic controls, remote control, joint load control, higher efficiency, improved stability, or unusual control algorithm) could create a need for rehabilitation as well. Improved mechanical protection includes addition of shutdown devices for conditions such as abnormal temperature, level, or pressure. Governor rehabilitation is covered in IEEE Std 1207. If a governor is to be rehabilitated or replaced, IEEE Std 125 should be used.

6.3.2 Functional enhancements

The most basic type of governor functional enhancement is the addition of devices to allow for improved performance or new operational modes. These may include speed switches and limit switches for automatic control, remote indicating devices, automatic blade angle control on Kaplan turbines, net head comparator, creep detection, and mechanical protection devices. The advantages of this approach are low cost, short outage time, and the likelihood of doing the work with available labor. The justification for this approach is operational improvements and improved mechanical protection.

6.3.3 Electronic conversion

The next level of governor rehabilitation is the electronic conversion. This consists of replacing the mechanical governor head with equipment of the type found in modern electric-hydraulic governors. Normal devices to be removed include the upper and lower floating levers, the dashpot and linkage, the ballhead and ballhead motor, the speed droop fulcrum, and, sometimes, the permanent magnet generator (PMG) used for speed sensing. Equipment added commonly includes an electro-hydraulic interface, gate position or needle position feedback transducers, electronic/digital governing controller, speed sensing equipment, power measurement transducers, pilot oil pressure regulating equipment, and improved oil filtration equipment. Electronic conversion will generally be able to accomplish all required changes in governor operating mode, and can be accomplished with relatively short down-time. Justifications for electronic conversions may include operational improvements and reduced maintenance costs. This approach would normally be taken

Copyright © 2006 IEEE. All rights reserved.

Copyright The Institute of Electrical and Electronics Engineers, Inc.
Provided by IHS under license with IEEE
No reproduction or networking permitted without license from IHS Not for Resale

only when maintenance costs for the main distributing valve and hydraulic pressure supply system (HPSS) are relatively low.

6.3.4 Partial replacement

Partial replacement includes not only an electronic conversion but also the replacement of the governor head and the main distributing valve. Only the existing HPSS and main servomotors are retained. Justifications for partial replacement may include operational improvements and reduced maintenance costs. This approach would normally be taken only when maintenance costs for the HPSS are relatively low.

6.3.5 Complete replacement

Complete replacement of the governor includes replacement of the HPSS. It is often associated with an increased hydraulic operating pressure that, in turn, necessitates main servomotor replacement. Justifications for complete replacement may include operational improvements, reduced maintenance costs, and improved mechanical protection. This approach would normally be taken only when maintenance costs for the HPSS are relatively high or when mechanical protections are inadequate.

6.4 Generators

6.4.1 Introduction

Rehabilitation of generators frequently includes uprating.

Certain parts such as collector rings, brake shoes, oil-to-water, and air-to-water heat exchangers will deteriorate in time. Although relatively minor items, problems with these generator auxiliaries may add significantly to the maintenance costs of the generator and rehabilitation of the generator presents the opportunity to address such problems. For example, the addition of a generator brake dust vacuum system may reduce costs associated with generator clean-up. The stator winding is a component that deteriorates with time and temperature. A large percentage of outages are caused by stator winding failures. Because of the many improvements in insulating materials and advanced design methods, a new stator winding will result in significant advantages including uprating, improved reliability, and life extension.

The stator core, the rotor winding or both may be replaced during rehabilitation.

Older rotor field and stator windings may contain asbestos. The hazards and legislation pertinent to these materials should be considered when disturbing these windings and other components. This subclause discusses the opportunities for uprating that are now possible due to technological advances. Most generators built before 1960 can be modified and uprated by at least 15%; however, the designer should be thorough and should consider all parts of the machine as if they were being designed for the first time. ANSI C50.10-1990 should be used for reference.

Any rehabilitation of a generator should include a assessment of the mechanical and structural aspects of the unit. Table 2, Table 3, and Table 4 are provided to ensure that all aspects of generator design are reviewed.

If a generator is rehabilitated, IEEE Std 810 and IEEE Std 1095 should be used for commissioning.

6.4.2 Electrical

Technical advances have made it possible for substantial increases in rating. Developments in the following areas have done the most to lead the advances in ratings:

a) Stator coil insulation
b) Ventilation and cooling

--`,,```,,,,````-`-`,,`,,`,`,,`---

Copyright © 2006 IEEE. All rights reserved.

Copyright The Institute of Electrical and Electronics Engineers, Inc.
Provided by IHS under license with IEEE
No reproduction or networking permitted without license from IHS Not for Resale

c) Thermal analysis
d) Computer analysis
e) Stator core rebuilds

Copyright © 2006 IEEE. All rights reserved.

Copyright The Institute of Electrical and Electronics Engineers, Inc.
Provided by IHS under license with IEEE
No reproduction or networking permitted without license from IHS
Not for Resale

Copyright The Institute of Electrical and Electronics Engineers, Inc.
Provided by IHS under license with IEEE
No reproduction or networking permitted without license from IHS

Table 2—Generator rehabilitation checklist—Part one

Component	Stator foundation	Stator frame	Stator core	Stator winding	Rotor pole body	Rotor pole coil	Rotor damper winding	Rotor rim	Rotor spider	Rotor keys	Shaft
Roundness and concentricity		✓	✓					✓			
Welds/Brazes		✓		✓		✓			✓		
Radial freedom		✓						✓			
Fastener torques	✓	✓	✓			✓	✓	✓	✓	✓	✓
Concrete integrity	✓	✓									
Cracks in plates and castings		✓			✓		✓	✓	✓	✓	✓
Non-uniform waves			✓					✓			
Gaps or crushing at splits			✓								
Hot spots			✓	✓	✓	✓	✓				
Upset laminations			✓		✓			✓			
Fretting corrosion		✓	✓				✓			✓	
Losses			✓	✓	✓	✓	✓				
Insulation resistance			✓	✓		✓					
Corona extinction voltage				✓							
Temperature class			✓	✓		✓					
Service record				✓		✓					
Deformation	✓	✓	✓	✓	✓	✓	✓	✓	✓	✓	
Mechanical strength	✓	✓			✓	✓		✓	✓	✓	✓
Safety factor	✓				✓	✓	✓	✓	✓	✓	✓
Insulation deterioration				✓		✓					
Cleanliness			✓	✓		✓					

Copyright © 2006 IEEE. All rights reserved.

Not for Resale

Table 3—Generator rehabilitation checklist—Part two

	Thrust bearing	Guide bearing	Ventilation system	Bracket foundation	Bracket structure
Fretting corrosion	✓	✓			
Operating temperature	✓	✓			
Cooling medium path analysis	✓	✓	✓		
Losses	✓	✓	✓		
Loading	✓	✓			
Safety factor	✓	✓			✓
Welds					✓
Mechanical strength					✓
Deformation	✓	✓			✓
Air utilization for cooling			✓		
Concrete integrity				✓	
Fastener torques				✓	✓
Cracks in castings and plates	✓	✓			✓
Cleanliness	✓	✓	✓		
Leakage	✓	✓			

Table 4—Generator rehabilitation checklist—Part three

	Heat exchangers	Brakes and jacks	High-pressure oil lift	Controls
Cleanliness	✓		✓	
Leakage	✓	✓	✓	
Capability	✓	✓	✓	
Service record	✓	✓	✓	
Adequacy of protection				✓
Productivity improvements			✓	

Table 5 illustrates one case and the results obtained. In this case, both the stator and rotor windings were replaced while the exciter was retained.

Copyright © 2006 IEEE. All rights reserved.

Copyright The Institute of Electrical and Electronics Engineers, Inc.
Provided by IHS under license with IEEE
No reproduction or networking permitted without license from IHS
Not for Resale

Table 5— Example of uprate results

Characteristic	Original	Uprated
Rotor winding	Class B strap	Class F strap
Stator winding	Class B asphalt	Class F epoxy
Rating	125 MVA .95 pf 13.8 kV	173.6 MVA .95 pf 13.8 kV
Overload	15%	None
Exciter	655 kW 500 V 750 V ceiling	Same
SCR	1.18	0.885
Field current at maximum load	1040 A dc	1036 A dc
Maximum rotor winding temperature rise at maximum load	80 °C	80 °C
Maximum stator winding temperature rise at maximum load	80 °C	80 °C
Efficiency at maximum load	98.11%	98.39%
Rotor coil copper	20 412 kg	31 480 kg
Stator coil copper	12 788 kg	17 092 kg
Maximum load torque	9 011 250 Nm	10 880 250 Nm

Uprating may involve changes to the inertia, the reactances, or the time constants. In each case, machine parameters should be assessed along with the capability of the existing design given new turbine characteristics.

Changes to turbine design may result in changes to unit overspeed, which could result in higher stress on rotating parts and increased overvoltages during a load rejection.

Since field current increases with load, the capacity of the rotor winding, the exciter, or both may be exceeded. The rated power factor may be altered, the rotor winding may be changed, or the exciter may be changed subject to interconnection or regulatory requirements.

The discussions in 6.4.2.1 through 6.4.2.4 explain how each of the four technical advances can be applied to existing generators.

6.4.2.1 Coil insulation

Newer insulation systems of higher temperature class for stator coils are both thinner and more heat conductive than the older asphalt based systems. Load carrying capability is thereby increased due to the extra copper that can be added and due to the superior heat transfer characteristics of the insulation system. For replacement coils, changes can be made to the stator coil copper strand dimensions and to the transposition configuration to reduce eddy current losses.

Copyright © 2006 IEEE. All rights reserved.
Copyright The Institute of Electrical and Electronics Engineers, Inc.
Provided by IHS under license with IEEE
No reproduction or networking permitted without license from IHS
Not for Resale

6.4.2.2 Ventilation

Ventilation tests on older generators have shown that many do not have the airflow patterns contemplated by their designers. In some cases, only design margins have allowed satisfactory operation of the unit. Tests of airflow and ventilation performance are therefore recommended to assure confidence in the ability of the unit to support the uprate. Such tests include pressure taps and the flow measurements in critical areas of the machine. Ventilation system effectiveness may be improved by:

a) Addition or redesign of rotor fan blades
b) Addition or redesign of baffles to control airflow
c) Cleaning of surface coatings or contaminants from heat transfer surfaces such as rotor coils
d) Conversion of an open ventilation system to a closed ventilation system

Total airflow may not be the most significant parameter. The cooling air should be appropriately distributed in the various passages in proportion to the heat generated in each passage.

6.4.2.3 Thermal analysis

Reviews of performance tests of older machines show that many had substantial temperature margins with respect to their guarantees. Rewinding these units with epoxy mica insulation systems may achieve up to a 15% uprate within the original temperature guarantees. Computerized solutions of heat transfer models relating the coils, teeth, core, and ventilating air coupled with more exact loss calculations enable designers to predict temperatures more accurately. This minimizes built in margins and possibilities of exceeding the guarantees.

The original rotor windings are likely to have more margin and so are more likely to be able to carry the increased current associated with the uprate. Because of relatively simple construction and low operating stresses, rotor windings suffer little deterioration and are seldom replaced.

Once the thermal and loss performance of the design are established at the uprated load, the capability of the air cooler system should be checked to ensure that sufficient heat removal capacity exists. Again, older, more liberal margins minimize the likelihood of this problem.

6.4.2.4 Computer analysis

Calculation methods for electrical parameters have improved. Additional analytical tools and procedures backed up by more experience are now available. Finite element analysis can now be used to verify previously empirically derived formulae. The number and complexity of design rule checks has grown. The generator may require detailed examination to acquire the necessary information.

6.4.3 Mechanical

The following discussion will point out certain mechanical areas that should be considered in the initial planning stages of an uprating as well as some of the problems a designer will face when reviewing these items. Table 6 provides a general check list for the mechanical review.

Copyright © 2006 IEEE. All rights reserved.

Copyright The Institute of Electrical and Electronics Engineers, Inc.
Provided by IHS under license with IEEE
No reproduction or networking permitted without license from IHS Not for Resale

Table 6—Areas of concern for mechanical integrity

Major components	Torque	Speed	Short Circuit	Magnetic Pull	Thrust
Frame	✓	✓	✓	✓	✓
Stator foundation	✓	✓	✓	✓	
Core/frame connection	✓	✓	✓	✓	
Spider	✓	✓			
Spider/rim connection	✓	✓		✓	
Rim		✓			
Pole tip and dovetail		✓			
Field coil		✓			
Shaft	✓	✓		✓	
Shaft/spider connection	✓	✓			
Shaft coupling	✓	✓			
Bearings		✓		✓	✓
Brackets		✓		✓	✓

6.4.3.1 Design practices

Early hydroelectric generators were mechanically designed to what appeared to be relatively safe levels, and the margins of safety, as calculated, were in many cases, rather large when compared to modern practice. Four reasons for caution when using these earlier calculations should be considered:

a) *Analytical methods.* The earlier methods were rather limited and most of the analyses were very basic. The computerized and more technically accurate calculations of today were not available. The larger margins permitted this and proved to be acceptable.

b) *Materials.* Material quality and quality assurance have improved. Certain materials, such as castings, are of immediate concern. A cast spider, for example, may have serious hidden defects that never caused failure only because of the high safety factor. Other materials may be susceptible to shock loads, brittleness, or corrosion over a period of time.

c) *Manufacturing processes.* Quality control, inspection, tooling, manufacturing methods, and tolerances were not as highly developed.

d) *Experience.* The backlog of historical data and experience gained while designing, building, and operating units at ever increasing ratings and speeds was not available. More data at extreme loadings gives today's designers an edge over their predecessors.

A fundamental problem in reviewing the design for the mechanical uprate on the older machines is the lack of original material requirements, calculated stress levels, quality checks, manufacturing, and other early recorded data. It would be expected that the drawings showing configurations and materials are available; however, exceptions to the drawings during manufacture, modifications made during installation and operation, and original expected design loadings versus actual may not be so easy to obtain.

Copyright © 2006 IEEE. All rights reserved.
Copyright The Institute of Electrical and Electronics Engineers, Inc.
Provided by IHS under license with IEEE
No reproduction or networking permitted without license from IHS
Not for Resale

6.4.3.2 Torque effects

A change to the loading of mechanical parts is due to the increase in torque. Torque is directly proportional to power and is inversely proportional to speed and efficiency. Since projected upratings run anywhere from a few percent to well over 50%, torque effects are significant.

Comparisons should be made between the original and new parameters. Some owners operated units well above rated load, and such overload performance can be used to see how the unit operates higher than design values. The components most affected by the torque change are:

a) *Shaft.* It will see the full change in torque; however, the basic design, configuration, and analysis make it somewhat easier to evaluate than the spider. If necessary, a relatively complete ultrasonic test of the shaft can be performed in the field to verify its integrity. The couplings should also be considered in the review.

b) *Spider.* It carries the full load torque from the shaft. Variations of design are numerous and the analysis can be complex. It is probably the most difficult component to evaluate with respect to increased torque. Torque stresses are only part of the total stress distribution in the spider. Stresses due to centrifugal force, weights and rim shrinkage should also be considered. Therefore an increase in torque does not necessarily mean a proportional maximum stress increase in the spider.

c) *Rim-to-spider and spider-to-shaft connections.* These will transmit the full value of a change in torque, but there is usually little difficulty in allowing increased loads.

d) *Stator.* Depending on the electrical changes made, the stator may be subjected to a change in the short-circuit torque. Often it will not be affected at all since, without changes to the electromagnetic design, the short-circuit torque is not proportional to rated torque. The frame-to-foundation and core-to-frame connections should also be reviewed.

6.4.3.3 Unit stability and magnetic pull

There are electrical changes that can be made in the stator that affect the dynamic stability of the unit. The unbalanced magnetic pull between the rotor and stator can change due to changes in air gap flux density and the arrangement and number of the stator circuits. A unit with a new stator core and winding design can have a significantly different magnetic pull. Such a change can affect guide bearing and guide bearing support loadings, critical speeds under load, shaft dynamic movements during operation, and stator behavior.

6.4.3.4 Turbine effects

The uprate may or may not involve a change in the turbine. If an uprated turbine is part of the rehabilitation program, the generator designer will need to contend with a number of possible changes. A change in rated speed, maximum runaway speed, turbine weight, or hydraulic thrust may need to be considered if they cause a significant change in the design loading of the generator.

Changes in speed are the exception rather than the rule and are not considered in detail here. A change in rated speed or maximum overspeed will affect most major components. The time for review will be lengthened if an increase in overspeed or a change in rated speed is contemplated.

The turbine characteristics, such as thrust, may change even if the existing turbine is used. The designer should obtain, from the turbine manufacturer, the design loads to be used in reviewing the generator.

A thrust change will have a direct effect on the thrust bearing and bearing support structure. A thorough analysis of the existing bearing can be made for increased load capacity. If changes need to be made because of thrust considerations, quite often minimal component changes will accomplish the desired result. Care should be taken when comparing the original design values against the new loading.

Copyright © 2006 IEEE. All rights reserved.

Copyright The Institute of Electrical and Electronics Engineers, Inc.
Provided by IHS under license with IEEE
No reproduction or networking permitted without license from IHS Not for Resale

A bearing that has satisfactorily run over the years may have done so because the design loadings were never reached. The mechanical support system should be analyzed for increased stress and deflection. The effect of the thrust on the axial stress in the shaft is usually checked and found to be small.

A change in the rated flow of the turbine may result in increased loading of the turbine control servomotors. Both the wicket gate servomotors and, where applicable, the runner blade servomotors will be affected by a change in rated turbine water flow. The servomotor dimensions, hydraulic supply pressure, pressure accumulator design, oil pump sizing, servomotor piping, and governor control valve design should be reviewed to determine if the changed turbine flow and power will require changes to any elements of the turbine control system.

6.4.4 Cleaning, inspection, and testing

Uprating cannot be accomplished reliably by just rewinding the stator, for example, without having a detailed knowledge of the condition of the generator and its performance. Many owners or manufacturers have records of performance tests made when the generator was new. If no ventilation modifications have been made on the original machine, the original temperature tests can provide very useful information to be factored into the design of an uprated machine. An old machine may have increased core and tooth loss as a result of aging of the silicon steel and degradation of interlaminar insulations. Therefore, if a substantial uprating is planned using the old stator core, core insulation integrity tests, and new loss tests should be made because higher core loss will adversely influence the winding temperature. Further discussion on this can be found in IEEE Std 1™ [B71].

A thorough cleaning of the generator is a necessary part of modifying and uprating. This should be done before the uprate design to permit a very detailed inspection of the mechanical parts. This is especially important when any of the major parts of the generator are castings. An inspection should include a thorough visual check (see Table 2). It may be wise to check some highly stressed areas with penetrating dye, magnetic particle, or ultrasonic methods.

Rotating exciters and collector rings should be inspected thoroughly. These, along with the rotor winding should have an insulation resistance test if they are to be used without modification on the uprated machine. If static exciters are a part of the rehabilitation program, the generator manufacturer should be contacted concerning allowable ceiling voltage and possible insulation damage.

Upon completion of the generator uprate work, a new set of tests may be desirable to establish a baseline for future operation. They should include tests specifically aimed at long-term characteristics such as dc ramp testing, partial discharge analysis, and operational air gap measurement if the appropriate equipment has been installed.

6.5 Excitation systems

6.5.1 Introduction

The excitation system associated with the generator provides the field current requirements of the machine as well as a means of voltage or reactive control. Many excitation systems installed prior to 1960 consisted of a rotating exciter feeding the main field of the generator, a rotating pilot exciter feeding the main exciter field, and a regulator controlling the pilot exciter output. Sometimes a motor-generator set with mechanical regulator was used instead of a pilot exciter. Static excitation systems using thyristor bridge rectifiers have been most commonly used since 1960. Another common excitation system for smaller high-speed machines is a brushless exciter with a rotating ac generator and rotating rectifiers. Both the older rotating excitation systems as well as the newer static excitation systems easily lend themselves to rehabilitation.

Copyright © 2006 IEEE. All rights reserved.
Copyright The Institute of Electrical and Electronics Engineers, Inc.
Provided by IHS under license with IEEE
No reproduction or networking permitted without license from IHS
Not for Resale

6.5.2 Rehabilitation

The reasons for considering rehabilitation of excitation systems are those common to most other equipment—improved efficiency, reliability, performance, and reduced maintenance. When rehabilitating machines with brushes and slip rings, brushless or static excitation systems should be considered. Maintenance is improved because of elimination of mechanical components, which wear and need frequent adjustment as well as replacing equipment for which spare parts are no longer available.

6.5.3 Accessories

The simplest form of modernization of excitation systems is the addition of accessories to the existing equipment. This is more commonly done on older static excitation systems rather than rotating systems. Possible devices include maximum and minimum excitation limiters, active and reactive droop compensator, power system stabilizer, field ground relay, static field temperature indicator, and VAR or power factor controller. Although these auxiliaries provide additional capabilities, they do not address the possible improvements that can be achieved by replacement of all or part of the excitation system.

6.5.4 Partial replacement

A partial replacement usually consists of replacement of the voltage regulator and pilot exciter with a modern solid-state voltage regulator that directly feeds the main exciter field. The exciter field rheostat is normally eliminated in a partial replacement. This type of rehabilitation has the advantages of relatively low cost, improved performance, and reliability, but does not maximize the efficiency increase and response when compared with a full static system.

6.5.5 Full replacement

A dc rotary exciter may be replaced with either a brushless exciter or a static exciter. In either case, there may be a marginal increase in overall generator efficiency. Both replacement options have the advantage of eliminating the exciter commutator and brush gear and their associated maintenance. The major efficiency improvements are accomplished by elimination of the mechanical and magnetic losses of the rotating exciter and elimination of the exciter field rheostat. Older rotating excitation systems have an efficiency of about 88% compared with up to 95% for static excitation systems. Reliability is greatly improved because older, worn equipment is more likely to fail when subjected to loads near its original design limits.

Modern static systems have high availability. Rotating type excitation systems may have too slow a response to function properly with present automatic control requirements and may not perform as needed during system transients. In contrast, static systems have the transient response and system performance required to mitigate transmission system stability problems associated with system voltage stability. Disadvantages of a static exciter include its high capital cost and its large floor space requirement. The outage time required to install a static exciter is typically a minimum of three weeks.

Brushless exciter response time is longer than that for a static exciter. One advantage of a brushless exciter is the elimination of the generator slip ring brush gear and its associated maintenance. Retrofitting a brushless exciter typically presents a number of mechanical interface difficulties. As such, static exciters are generally the preferred replacement option.

Further details on excitation system characteristics can be found in IEEE Std 421.2™ [B69].

Copyright © 2006 IEEE. All rights reserved.

Copyright The Institute of Electrical and Electronics Engineers, Inc.
Provided by IHS under license with IEEE
No reproduction or networking permitted without license from IHS Not for Resale

6.6 Generator main leads and switchgear

The unit main leads and switchgear are two areas that are sometimes overlooked when undertaking a station rehabilitation program. Both of these should be carefully evaluated when any changes in unit ratings are being considered.

The unit main leads may be cable or busbar. The unit circuit breaker may be oil-filled, air-magnetic, vacuum, SF_6, or air blast. The steps to be taken for evaluating the adequacy of the existing installation are as follows:

a) Inspect the system for any visual damage, such as signs of arcing or degradation of insulation. The physical condition alone may dictate replacement of the equipment.

b) Obtain, if possible, maintenance and repair records for the station to determine if the installation has had a record of failure.

c) Obtain, if possible, nameplate data, drawings, catalog information, ratings sheets, test reports and other documentation that may contain the following equipment ratings:

   1) Maximum voltage

   2) BIL level

   3) Continuous current

   4) Short-circuit withstand current

   5) Maximum current interrupting rating (for switchgear)

d) Compare the main leads and switchgear ratings against those of the machine. Perform short-circuit system studies to determine system fault levels and compare to equipment ratings.

6.7 Generator neutral grounding equipment

The generator neutral grounding system should be reviewed as part of the rehabilitation study.

The neutral grounding recommendations depend on the way generators are connected to the system. High impedance neutral grounding is most often recommended for unit connected generators. This is where one generator is either directly connected, or connected through a circuit breaker, to a step up transformer such that there is no interconnection of zero sequence current or voltage. Selective ground fault relaying or unbalanced load applications use other neutral grounding methods. These include applications where generators are connected at generator voltage to other generators or overhead lines and power distribution systems.

As part of the rehabilitation when new generator stator windings are being installed, the neutral grounding and protection system may be upgraded in line with current IEEE recommendations. Details of grounding may be found in IEEE Std C62.92.2™ [B126] and ANSI C37.101 [B65]. These recommended systems are designed to minimize damage caused by a generator single-phase ground fault and limit transient overvoltages.

The existing generator neutral grounding equipment will most often involve current transformers, resistors either directly in the neutral or on the secondary of a distribution transformer in the neutral, and potential transformers. Ground protection consists of voltage and current relays connected to instrument transformers.

Replacement of oil-filled transformers in the neutral grounding scheme may be desirable to avoid a potential fire hazard especially if transformers are located indoors. Many transformers contain oil that is contaminated with PCB compounds. Failure of these transformers may cause the spread of the hazardous material into the environment. Transformer oil should be tested to determine PCB content prior to removal from the site.

Copyright © 2006 IEEE. All rights reserved.
Copyright The Institute of Electrical and Electronics Engineers, Inc.
Provided by IHS under license with IEEE
No reproduction or networking permitted without license from IHS
Not for Resale

Any revision of the neutral grounding that increases the voltage stress at the neutral end of an existing aged generator stator winding should require review of the generator insulation at the neutral. A change in stress at this point on an old winding could precipitate an incipient generator ground fault.

Low resistance or reactor neutral grounding to permit ground fault protection coordination is often found where power is distributed at generator voltage.

Resistors, distribution transformers, instrument transformers, and protection schemes (see 6.10) should be reviewed and checked as part of the rehabilitation process.

6.8 Main transformers

Uprating the power train(s) (i.e., turbine and generator) of the power plant may necessitate a corresponding increase in the capacity of the generator step-up (GSU) transformers(s) of the plant. 23. There are other factors besides a power train upgrade that could trigger a re-evaluation of the GSU transformer ratings and associated transformer parameters. These include transmission system growth occurring since the plant was commissioned, or new plant reactive power requirements as imposed by an independent transmission system operator (e.g., RTO or ISO). A re-evaluation of the GSU transformer should include the unit rating in units of MVA, impedance and high-voltage tap ratings to ensure optimization of the plant reactive capabilities with transmission system requirements. Transformer impedance evaluation should be coordinated with an evaluation of the short-circuit requirements of existing or new circuit breakers and switchgear connected to the GSU transformer. A coordinated approach is recommended for impedance evaluation to ensure selection of a value that optimizes generator reactive capabilities without compromising generator breaker fault duty limitations. IEEE Std C57.116™ [B39] contains guidelines for conducting GSU transformer application evaluations.

If the power train uprating dictates a corresponding increase in GSU transformer capacity, rewinding the existing GSU transformer is a possible approach for obtaining additional capacity, but probably is not the most economical. If the transformer has provisions for forced cooling, the addition of oil pumps and fans is another method for achieving additional capacity. If the transformer rating is increased by rewinding or additional cooling, the capability of the bushings and current transformers to handle the corresponding current increase should be investigated. If the required capacity is not economically or practically feasible by either of the preceding methods, a new replacement transformer should be considered.

In addition to rehabilitating the GSU transformer because of the need for increased capacity, improved transformer reliability may be another factor indicating a transformer rehabilitation program is required. For example, existing transformers with water cooling (OFWF, ODWF) can be evaluated for replacement with a transformer having a more reliable cooling scheme such as those employing self cooled (ONAN), self cooled/forced-air cooled (ONAN/ONAF) or other cooling schemes (see IEEE Std C57.12.00™ [B41]). When evaluating alternative cooling schemes for a replacement GSU transformer, some cooling schemes have special operational characteristics that should be considered when selecting the cooling method. For example, a forced air-forced oil cooled (OFAF or ODAF) unit offers economical and physical size benefits that are attractive, but with a trade-off constraint that the unit must have a portion of its forced oil cooling circuit in operation whenever the unit is energized. If the minimum cooling requirements are not met, then a OFAF or ODAF transformer must be de-energized to prevent heat damage, a constraint affecting unit availability. Other reliability considerations include power plant configurations where station service power is derived downstream from the plant's GSU transformer(s). This can become a major concern for unattended plants or remotely operated plants that may expect long delays in maintenance callouts.

Considerations should be given to containing oil leakages. In conjunction with the containment or isolation, fire protection and oil contamination of the environment should also be considered.Rehabilitation is an opportune time to evaluate the insulating oil and reprocess it to improve its insulating quality. If the oil

Copyright © 2006 IEEE. All rights reserved.

Copyright The Institute of Electrical and Electronics Engineers, Inc.
Provided by IHS under license with IEEE
No reproduction or networking permitted without license from IHS Not for Resale

contains PCBs, it would be advantageous to replace the oil and decontaminate the transformer. The contaminated oil should be disposed of following applicable regulations.

Rehabilitation is also an opportune time to re-evaluate and improve transformer protection (see 6.9). When re-evaluating transformer protection, consideration should be given to incorporating transformer loss of cooling indication in the protection scheme.

The review should evaluate if it is economically advantageous to replace a transformer rather than perform extensive rehabilitation. Replacement can provide increased capacity, improved efficiency, and improved reliability.

6.9 Control and instrumentation equipment

Rehabilitation of a hydroelectric plant's control and instrumentation equipment can improve plant performance, increase plant availability, reduce maintenance, and reduce plant operating costs. Plant performance can be improved by controlling the turbines to make optimum use of available water. Plant availability can be enhanced through the use of comprehensive logs and accurate data for tracking and anticipating problems. Maintenance can be reduced by replacing high-maintenance instrumentation, such as strip chart recorders, with data logging equipment. Operating costs may be reduced by automating the controls to enable unattended operation of the plant or by centralizing controls to reduce the number of operators.

The lack of availability of replacement parts for existing systems becomes a significant factor to both operating costs and unit availability. The maintenance task becomes increasingly challenging as well.

Maintaining adequate parts and test equipment to maintain the control and instrumentation systems within the plant can become difficult and costly. This can result in greater reliance upon purchased service from control equipment vendors and control service organizations.

Although replacement of old control and instrumentation equipment with current technologies can provide enhancement in plant operation and reduced maintenance, the introduction of new technology should be done with proper attention given to personnel training. Adding more sensors and intelligent monitoring devices is only useful if they remain well calibrated and fully operational, therefore requiring well trained staff for the maintenance of such devices.

The following items should be reviewed when considering rehabilitation of the plant control and instrumentation equipment:

a) The turbine/generator start-stop sequencing logic and the control systems for various plant subsystems. If the logic is performed with relays, determine if replacing the relays with programmable controllers could enhance plant operation, and reduce equipment maintenance. The references IEEE Std 1010 and IEEE Std 1020 should be used when performing this study.

b) The amount of manual operation or maintenance of existing equipment or subsystems, to determine if replacement of the equipment or subsystems would reduce operating and maintenance costs or facilitate plant automation.

c) The location and arrangement of existing controls to determine if improvements in plant operation could be achieved by automation, extending to a centralized location, or consolidation of these controls. The reference IEEE Std 1249 should be used when performing this study.

d) The overall plant control systems to determine if offsite control and data acquisition could reduce operating costs, improve plant performance, and enhance plant maintenance by enabling unattended plant operation and data analysis that may not have existed before. Centralizing and automating the controls and data acquisition systems could be achieved by several methods including, a computer-based control system, hard-wired logic, or programmable controllers.

Copyright © 2006 IEEE. All rights reserved.
Copyright The Institute of Electrical and Electronics Engineers, Inc.
Provided by IHS under license with IEEE
No reproduction or networking permitted without license from IHS
Not for Resale

e) Equipment devices such as pressure, temperature, and level sensors to determine if replacement with newer instrumentation could provide more accurate and reliable data for plant operation, maintenance, and protection.

f) The plant instrumentation and recorders to determine if improvement in quantity or presentation format could be achieved. This improvement could reduce operator confusion and errors. Overall plant monitoring from offsite location should be considered if the analysis expertise is based outside the plant.

g) The Annunciation System to determine if operators are provided with enough information to know what action to take in response to an alarm, and to correct any nuisance alarms that may exist.

h) The unit synchronizing scheme to determine if automatic synchronizing is desirable and that manual closing is supervised by a synchronizing check relay.

i) Instrument transformer burdens, ratios, and accuracies to determine if their present application is correct.

j) The plant operation to determine if the total efficiency or economic utilization can be improved.

6.10 Electrical equipment protection

Electrical relaying systems are designed to offer protection to equipment during unusual loading and fault conditions. At the time of the fault, damage is either eliminated or minimized by the relay operation. The extent of the relaying system, accordingly, is determined by the cost of the protective system weighed against the system designer's perception of the avoided loss probability and the cost of the avoided loss resulting from the catastrophic event.

All protective relay applications should be reviewed. Some examples are:

Power transformers

a) Generating equipment

b) Station service transformers

c) Station service switchgear

d) DC systems

e) Motor circuits

f) Feeder circuits

g) Excitation systems

During a hydroelectric power plant rehabilitation, it is necessary to analyze each of the protective relaying devices and systems. This is very important in older stations to determine if:

— The existing relays are reliable, secure, and maintainable

— Additional protection may be justified due to the advanced age of equipment

— Enhanced performance can be obtained by use of new devices

— Present system criteria and present day standards are met

If equipment ratings are being changed in the rehabilitation, it is particularly important to re-evaluate the relay application; recalculate the settings; field test the devices; and to review the instrument transformers burdens, ratios, and accuracies.

Although seldom installed in old plants, breaker failure relaying may be a desirable addition. This should be a consideration in all rehabilitated hydroelectric power plants.

Copyright © 2006 IEEE. All rights reserved.

Copyright The Institute of Electrical and Electronics Engineers, Inc.
Provided by IHS under license with IEEE
No reproduction or networking permitted without license from IHS
Not for Resale

Digital protection relays offer the possibility of economic redundancy, sequence of event recording, waveform capture allowing diagnosis in case of fault, and self diagnostics. Interfacing the relays to a control system through a digital communication link allows the transfer of data stored in the protection relay.

Improvements in the generator excitation system, particularly if a potential source static excitation system supplied from the generator terminals is utilized, may result in need to re-evaluate generator relaying such as overcurrent.

6.11 Auxiliary power equipment

The station service equipment usually will not require any modifications or upgrading, provided that the equipment was properly sized initially and no serious maintenance problems have been encountered. If plant unit sizes are uprated or new auxiliary equipment is installed, the overall station service requirements should be carefully reviewed. Also, loads may have been added to the point where equipment is seriously overloaded. It is suggested that short-circuit, load flow, and voltage regulation studies be performed.

The following station service equipment should be checked and the plant operating methods should be reviewed for possible improvements in efficiencies and implementation of changes as required due to plant rehabilitation:

a) Determine if the station service transformers are properly sized for new conditions of the plant. A substantial unit uprating and other plant improvements may increase auxiliary loads and may require changes in the transformer cooling system or even replacement of the transformer.

b) If the existing station service transformer is an oil-insulated or PCB type, a replacement should be considered.

c) Review station service transformer operating methods for improved operation. Re-configuration could eliminate unnecessary station service operations cause by forced de-energization of the unit auxiliary transformer during the unit shutdown and startup period.

d) Verify that the station service switchgear is in satisfactory operating condition through inspection or testing, and if necessary refurbish or replace the equipment. Circuit breaker contacts, arc chutes, etc., should be inspected. Review current interrupting capability. If increased auxiliary power is required, verify that the existing equipment has the required maximum current carrying capability.

e) Verify that station service voltage levels remain within acceptable limits during all operating conditions.

f) Determine the operating power factor of the auxiliary power system. Low power factor means larger losses. If required, shunt capacitors should be considered to improve the power factor.

g) Investigate the need for adding automatic bus transfer facilities to improve auxiliary system reliability and in some cases to reduce losses.

h) If it does not already exist, verify the need for a plant standby generator.

i) Review loading on lighting panels, load centers, motor control centers, etc., to verify that they are not overloaded.

j) Investigate replacing existing electric motors with high-efficiency motors. It should be recognized that some high-efficiency motors have abnormally high starting currents that may cause nuisance tripping of overload protection.

6.12 Batteries, chargers, and dc distribution equipment

During the plant rehabilitation process, an examination of the station dc system should be performed to assess its adequacy for continued plant operation. Among the factors to be considered are dc system loading, equipment age, and fault clearing coordination.

--`,,```,,,,````-`-`,,`,,`,`,,`---
Copyright © 2006 IEEE. All rights reserved.
Copyright The Institute of Electrical and Electronics Engineers, Inc.
Provided by IHS under license with IEEE
No reproduction or networking permitted without license from IHS
Not for Resale

Over the years of plant operation, the dc system loading likely has changed. Increased loading could have resulted from additional equipment, such as the following:

a) Emergency lighting
b) Protective relaying and fault monitoring equipment (It should be noted that digital relays represent a constant battery load where the older electrical-mechanical relays did not.)
c) Control equipment
d) Additional switchgear
e) Additional substation breakers
f) Remote terminal units for offsite control and monitoring
g) Automatic unit control systems.
h) Field flashing for static excitation systems
i) Fire detection systems
j) Security systems
k) Bearing lubrication systems

A battery sizing calculation should be performed to determine if the station battery is capable of supplying not only existing loads but also those that result from the rehabilitation of other plant systems. The battery's reduction of output capability with age should be factored in. The combination of increased load and battery age may indicate that replacement is in order.

Procedures for testing station batteries and for performing the sizing calculations are available in industry standards listed in Annex A, [B77] through [B92].

Increased dc system load will also impact the battery charger. A charger sizing calculation should be performed to determine if a higher capacity charger is needed.

The dc distribution panelboards should be examined. Breakers should be inspected and replaced if necessary. Additional breakers, or perhaps additional panelboards, may be required to supply dc to new or modified systems that result from the powerhouse rehabilitation. Finally, a fault clearing study should be performed to assure coordination between panelboard breakers and the battery and distribution cabinet protection.

Many older plants have a single battery bank supplying all protection and control devices. In such cases, a second battery bank should be considered for purposes of reliability. Many modern plants, especially larger plants, are equipped with dual battery banks and dual chargers.

6.13 Emergency power equipment

Aside from the station battery, the most common source of emergency power at a powerhouse is the engine driven generator. It is sized to supply essential loads, such as the following, for a specified number of hours:

a) Governor oil pump
b) Guide bearing oil pump
c) High-pressure bearing oil lift pump
d) Station drainage pumps
e) Battery chargers
f) Emergency lighting
g) Spillway gates
h) Fire protection equipment

Copyright © 2006 IEEE. All rights reserved.

Copyright The Institute of Electrical and Electronics Engineers, Inc.
Provided by IHS under license with IEEE
No reproduction or networking permitted without license from IHS Not for Resale

i) Cooling water pumps (turbine, generator, etc.)

Engine generator capacity should also be adequate to support abnormal plant operating conditions, such as black start. Provision for periodic engine load testing should be made to ensure that the unit will operate and meet plant requirements.

If additional essential loads result from the plant rehabilitation, a study should be performed to ensure that the existing engine generator will adequately supply them. If a larger motor load is to be supplied, a voltage drop study should be performed. These studies, as well as the overall mechanical condition of the engine generator, may indicate that replacement is in order.

Enhancement of the engine generator control scheme and protective relaying may be beneficial. Automatic engine start and generator loading of essential loads and load shedding of non-essential loads upon loss of station service may be desirable, especially if the plant is unmanned.

6.14 Uninterruptible power supply (UPS)

The rehabilitation of the plant's control systems may require the addition or replacement of the UPS.

An uninterruptible power supply furnishes frequency and voltage regulated ac power to certain plant systems during a loss of the normal power source. The UPS obtains its power from a dedicated battery or the station battery if station ac power is lost.

The systems that are powered by a UPS tend to be those related to data collection and storage, whose functions can be of importance during a main power system disturbance, and in some cases the UPS is related to control. These types of systems normally are microprocessor based and may therefore be sensitive to power interruptions. If such systems are added to the plant during rehabilitation, the addition of a UPS system may be desired.

Guidelines for selecting a UPS may be found in IEEE Std 944 [B77].

6.15 Lighting

During the plant rehabilitation, the station lighting system should be reviewed to assess the adequacy of the existing system and to study possible savings on energy consumption. The items listed in 6.15.1 through 6.15.4 should be considered.

6.15.1 Switching

In many older plants the switching is directly from the lighting panels. As a consequence, most of the lights are left on continuously. Selective switching in the areas of use should be considered.

6.15.2 Automatic control

In the areas where extinguishing of lights may not create a hazard, automatic controls may be installed by use of photocells, timers, or clocks. This can provide considerable savings in energy. This is particularly true in the areas where daylight is available.

6.15.3 Lighting sources

Review should be made of existing lighting fixtures to assess if replacement of the lighting sources should be considered. Replacement of existing fixtures by more efficient sources may prove economically advantageous as lighting source efficiencies vary considerably. The efficiency is measured by the amount of light

--`,,```,,,,````-`-`,,`,,`,`,,`---
Copyright © 2006 IEEE. All rights reserved.
Copyright The Institute of Electrical and Electronics Engineers, Inc.
Provided by IHS under license with IEEE
No reproduction or networking permitted without license from IHS
Not for Resale

(lumens) obtained from the energy (Watts) used. Factors such as fixture cost, lighting quality, lighting usage, and lamp life should be considered a part of the lighting system evaluation. It should be noted that changes to the lighting system may affect the cooling load of the HVAC system.

6.15.4 Emergency lighting

The emergency lighting system should be investigated to determine if an upgrade is required to meet accepted present standards.

6.16 Water systems

6.16.1 General

The power plant main (raw) water supply is taken from the reservoir, usually via the penstock, or pumped from the tailrace. This main water supply is normally filtered before feeding the cooling water, fire protection, and potable water systems. Rehabilitation of these systems may be needed to match increased cooling requirements of power plant equipment, to increase reliability, and to meet applicable code requirements.

Evaluation of water systems for rehabilitation should include the following items:

a) Corrosion protection
b) Valve and fitting seals
c) Pipe vibration and expansion supports
d) Acoustic and thermal insulation and heat tracing
e) Pressure reduction and cavitation
f) Filtration or purification
g) Piping and valving arrangement for maintenance
h) Instrumentation for optimizing operation and initiating alarms
i) Suitability of present maximum summer water temperature for intended cooling use
j) Pipe wall deterioration restricting flow due to buildup
k) Flow
l) Water source

6.16.2 Cooling and sealing water

Cooling water is either taken directly from the main water supply or pumped from the tailrace. Economically, the use of cooling water pumps should be considered for plants operating with heads exceeding 180 m. The cooling water system serves power plant equipment such as:

a) Turbine components
    1) Bearing coolers
    2) Shaft seal
    3) Runner wear seals
b) Generator components
    1) Bearing coolers
    2) Air coolers
c) Electrical equipment
    1) Step-up transformers coolers

Copyright © 2006 IEEE. All rights reserved.

Copyright The Institute of Electrical and Electronics Engineers, Inc.
Provided by IHS under license with IEEE
No reproduction or networking permitted without license from IHS Not for Resale

2) Exciters coolers

3) Isolated phase bus coolers

d) Mechanical equipment

1) Heat and ventilating air handling units

2) Air compressors coolers

— Evaluation of the cooling water system for rehabilitation should include:

— Consideration of optimization of cooling water usage by temperature regulation of flow to generator air coolers.

— Review of the filtration system to determine whether it is adequate or improvements may be beneficial. One consideration could be using duplex filters to permit automatic or manual backwashing without unit shutdown. Additional filtration or treatment may be required for special applications.

— Determination of the need for additional instrumentation to monitor pressure, flow, temperature; to optimize system operation; and to alarm low flow and high temperature conditions.

— Review of cooling requirements for uprated power plant equipment with increased power output.

The supply of water for both the turbine seal and the bearing lubrication heat exchanger may require revision of the following auxiliary systems:

— Water booster pumps with necessary motor starters

— Water flow and pressure switches for pump control

— Water flow switches for seal and heat exchanger supply lines

— Motorized or solenoid operated control valves to terminate the cooling water flow as the unit comes off line

— Water sump pumps for mounting on the turbine head cover to remove water leaking out of the turbine seal; necessary motor starters and level switches to control the sump pump motors

— Water filters either manual or automatic self-cleaning with necessary differential pressure switches or predetermined time

— Temperature control valves to modulate the cooling water flow to each oil heat exchanger

Many of the above listed items that are part of the powerhouse water supply system may need to be upgraded to handle the water requirements of the rehabilitated turbine. The installation of an automatic self-cleaning strainer in rehabilitated plants can eliminate the need for manually operated basket strainers, which require periodic servicing.

6.16.3 Fire protection

The fire protection water is normally taken from the power plant main water supply directly, pressure regulated, or boosted to the appropriate system operating pressure. The fire protection system is covered in 6.21.

6.16.4 Potable water

Potable water is normally taken from the power plant main water supply, regulated, and treated before serving the plumbing fixtures. Treatment usually includes further filtration and chlorination. Automatic chlorination based on flow has not been satisfactory for low flow applications, and consideration should be given to utilizing more recent methods such as ultraviolet treatment. Lead content resulting from sporadic demand of potable water using soldered tubing is an increasing concern and the use of alternate pipe material should be reviewed.

Copyright © 2006 IEEE. All rights reserved.
Copyright The Institute of Electrical and Electronics Engineers, Inc.
Provided by IHS under license with IEEE
No reproduction or networking permitted without license from IHS Not for Resale

6.17 Station drainage

Over the life of a hydroelectric project, changes can occur that affect the quantity, source, and removal of station drainage water. Gallery drains, turbine pit drains, and foundation drains (particularly when the power plant structure is part of the dam) may become clogged by precipitates in the drain water and require opening by cleaning, reaming, or drilling new drains. Rehabilitation may require consideration of oil and water separators or prevention of oil leakage reaching the station sump to meet increased environmental regulation. The amount of leakage or drainage from gallery and foundation drains may also be changed from the original design quantity.

Other sources of water to the station drainage system on the turbine head cover may be from leakage by wicket gate stem bushings and turbine shaft seals.

New downstream conditions or peaking operation can result in a higher tailwater elevation. The higher tailwater elevation may affect the removal of station drainage quantities and sump pump efficiency if the tailwater elevation rises above the discharge line.

A review of the station drainage system with the various drains collecting in a station sump and the pumping equipment, discharge lines, and check valves necessary to empty the station sump is a necessary part of the rehabilitation project.

Pumping equipment changes that may be necessary include the following:

a) New pumps to restore efficiency or provide for additional capacity due to pumping head changes.
b) New high efficiency driving motors for energy conservation.
c) New pump controls and alarms in the form of station sump level float switches, etc.
d) Rebuilding wearing parts of the pump systems and controls.

The turbine and draft tube unwatering system can affect the capacity of standby or backup pumps if routed through the station sump.

6.18 Grounding system

The adequacy and proper use of the grounding system of a hydroelectric power plant is critical to the safe operation of the plant. The grounding system provides a low resistance path to ground for fault currents, thus reducing voltage rise of equipment and electrical circuits during faults. The grounding system provides a nearly equipotential reference point to connect plant equipment. This system includes the buried or embedded ground mat, risers, exposed ground cables, and connectors. Modern instrumentation and control systems require a sound ground system used in conjunction with proper shielding techniques to reduce electrical interference.

Because much of this system is inaccessible, rehabilitation of the existing system, or modification to permit other plant rehabilitation, may be difficult. Ideally the system should be thoroughly inspected and tested to assure its integrity and verify that the grounding system resistance is not excessive for the available fault current. In reality, much of the grounding system in the plant itself may not be available for inspection because it is buried or embedded.

Where part of the buried ground mat for the installation is reasonably accessible, such as in an associated switchyard, it may be desirable to inspect a sampling of the ground mat conductors and connectors in an attempt to verify the condition of the system. Where there is question about the effectiveness of the system, testing of the grounding system resistance is advised. Where grounding system resistance exceeds a defined

Copyright © 2006 IEEE. All rights reserved.

Copyright The Institute of Electrical and Electronics Engineers, Inc.
Provided by IHS under license with IEEE
No reproduction or networking permitted without license from IHS Not for Resale

maximum it may be possible to reduce the overall ground mat resistance by connecting to accessible portions of the mat and extending the mat over a larger area, such as into the tailrace.

This may not solve the problem where individual conductors and connectors have deteriorated and therefore dangerously high voltages can exist on equipment during faults. Deteriorated conductor and connectors should be replaced wherever possible. Where the grounding system has deteriorated and cannot be corrected, or the available fault current has increased, consideration should be given to reducing ground fault current and the duration of faults in order to minimize the danger to personnel as an alternative to making major grounding system modifications. The duration of faults may be reduced by reducing the relay and circuit breaker operating times.

The original design of each installation and economics will dictate what modifications are feasible. Exposed grounding system components should always be inspected and then replaced where needed. All ground connections to existing equipment should be inspected and all new equipment properly grounded.

6.19 Cables and raceways

Cables and raceways may be affected in any rehabilitation of power plant equipment and systems and may be candidates for extensive rehabilitation. For the purposes of this guide the term “raceways” includes conduit, trenches, cable trays, and other electrical cable support systems.

Cable should be considered for replacement if any of the following conditions exist:

a) The cable has reached an age where it may be wise to replace the cable given that it will be in use for many years before replacement is again feasible.
b) The cable insulation or outer jackets may be deteriorated to the point where continued use would be unsafe or unreliable. A visual inspection is important because some cables may pass an insulation resistance test but have cracks allowing water to enter the cable.
c) The cable may be constructed of flammable or other materials such as lead, asbestos, varnished cloth, or rubber, which are no longer suitable for use.
d) The ampacity of the cable is not sufficient or the voltage drop is excessive for the intended loads.
e) The cable has insufficient conductors for the needs of the modernized plant.

Any cables that have been disturbed during rehabilitation should be tested to ensure insulation integrity. If they fail the test, they should be replaced.

An inspection of the cabling system in an older plant will usually show that older cables are poorly identified; are possibly damaged; that over the years additional cables of various types have been added for different purposes; and that the system has become confused and disorganized. Also, in light of more recent concerns about fire protection and prevention it may become obvious that the existing cabling system presents unacceptable fire hazards.

For any of the previous reasons, extensive rehabilitation may be justified. It is probable that total removal and replacement of the cables is more cost effective than selective replacement. Where cable runs through conduit, it should also be noted that removing and totally replacing the cable is probably more acceptable since it is virtually impossible to keep installation pulling tensions at an acceptable level when existing cables remain in the conduit. Also, the existing cable may be damaged by the process of installing the new cable.

Traditionally, many of the cables in a hydro power plant are related to the control system. When the existing cables are in bad condition, new state-of-the-art digital control systems offer the possibility to replace most

--`,,```,,,,````-`-`,,`,,`,`,,`---

 Copyright © 2006 IEEE. All rights reserved.

Copyright The Institute of Electrical and Electronics Engineers, Inc.
Provided by IHS under license with IEEE
No reproduction or networking permitted without license from IHS Not for Resale

of the control cables with a single or redundant communication network. Network cables can be installed in the existing raceways.

Raceways may have suffered abuse or misuse such as overcrowding or overloading and therefore should be inspected for possible rehabilitation. Their structural integrity should be verified and restored where required. For maximum efficiency, this inspection and repair should take place when the cabling itself has been removed as discussed above.

It may be necessary to modify or replace all or part of the raceway system. This could occur if:

— The raceway is structurally damaged beyond repair.

— The cable trenches do not drain water properly.

— The existing raceway system cannot support the load dictated by the needs of a more complex, rehabilitated plant.

— The cable trays are constructed of material (e.g., plywood) that are unacceptable for reasons of fire hazard.

— The cable trays are constructed such that good ventilation of the cables is not provided. For example, cable trays with solid bottoms do not provide the ventilation of the cables that open ladder type trays do.

— Cable trays may not be properly grounded.

— Existing cable trays will not extend to new or rehabilitated equipment.

Proper grounding is important when rehabilitating the raceways. Metal portions of the raceways should be bonded together by bonding jumpers and proper connections to the plant grounding system should be provided. Also, some older cable trays were constructed of asbestos. The hazards associated with asbestos should be considered when rehabilitating these systems.

With increasing emphasis on fire prevention and containment, special consideration should be given to floor and wall penetrations so that appropriate fire stops can be provided. In some cases it may also be desirable to provide fire containment in the raceways themselves in the form of fire retardant material sprayed on the cable or even fire retardant tape and blankets on or over the cables. Fire detection near some raceways may also be desirable. Safety standards, company policy, cost, criticality of the plant, and other considerations will determine the extent of the fire detection system.

6.20 Heating, ventilating, and air conditioning systems

6.20.1 General

The heating, ventilating, and air conditioning (HVAC) systems of a hydroelectric power plant serve a variety of enclosed spaces within the power plant. Examples of enclosed areas in the plant cover such diverse functions as generator air housings, plant offices, control rooms, inspection galleries, cable tunnels, and personal egress areas. Each of these enclosed areas has its own unique set of HVAC requirements and use patterns. For plants that did not have HVAC systems and new equipment has been added, the addition of an HVAC system may be warranted to provide equipment cooling such as the addition of static excitation systems or battery chargers. Energy usage of power plant HVAC systems can be reduced by modifying the HVAC system itself or by changes to components of the enclosed areas such as windows, door, roof, walls, etc. An energy audit of the power plant is suggested for identifying, quantifying, and documenting measures that will produce required HVAC system performance commensurate with reduced energy demands. Because of site specifics of individual hydroelectric power plants, only a brief discussion of power plant building components and HVAC subsystems that can be evaluated for energy savings during rehabilitation studies follows. The user is referred to the American Society for Heating, Refrigeration and Air Condition-

Copyright © 2006 IEEE. All rights reserved.

Copyright The Institute of Electrical and Electronics Engineers, Inc.
Provided by IHS under license with IEEE
No reproduction or networking permitted without license from IHS Not for Resale

ing Engineers' (ASHRAE) *Handbook of Fundamentals* [B143] and the U.S. Department of Energy's *Buildings Energy Databook* [B150] for an in-depth discussion of remedial and implementation measures.

6.20.2 Building components

A number of measures employed in recent years to reduce HVAC energy demands in commercial and industrial buildings have applicability to powerhouse structures. Building envelope components such as double-glazed windows; building weather-stripping; wall, floor, and roof insulation; and systems to mitigate building solar gains are examples of items to evaluate during an HVAC rehabilitation.

6.20.3 HVAC systems improvements

HVAC systems may consume disproportionate amounts of energy, that is, have high energy "budgets," due to a variety of reasons. Some areas for improvement could be:

a) HVAC system distribution losses (leaks and poor performance of piping, pumping, duct and fan systems)

b) Lack of HVAC system energy management controls (set-back thermostats)

c) Low HVAC system efficiency (poor refrigeration system coefficient of performance, use of multiple conditioning systems)

d) Poor HVAC system zoning and control

e) Lack of utilization of outside air and generator waste heat sources to enhance HVAC system performance

f) Overabundance of HVAC supply air

g) Inefficient electric motors

6.21 Fire protection

When rehabilitating fire detection and protection systems and equipment, the existing installation should be evaluated in conjunction with current applicable codes and standards.

6.21.1 Detection

Some of the areas and equipment that should be evaluated for detection systems are as follows:

a) General power plant areas

b) Control building

c) Office areas

d) Flammable liquid storage and piping areas

e) Cable spreading rooms and tunnels

f) Generators

g) Governor actuator cabinets

h) Transformers

Detection systems can be automated to be self monitoring for system faults, such as short circuits, ground faults, and open circuits. They can also be configured to function under faulted conditions. The detection system can also provide automatic initiation of protection systems. The extent of automation is dependent on company policy, cost, and applicable codes and standards.

Copyright © 2006 IEEE. All rights reserved.
Copyright The Institute of Electrical and Electronics Engineers, Inc.
Provided by IHS under license with IEEE
No reproduction or networking permitted without license from IHS Not for Resale

6.21.2 Protection

Protection equipment and systems can range from hand-held extinguishers to automatic gas or water deluge systems. Power plant areas, the control building, and office areas are most often protected by sprinkler systems with fusible link spray heads. Flammable liquid storage areas, cable spreading rooms and tunnels, and transformers can be protected by fixed spray systems initiated either manually or automatically by the detection system. Generators are usually protected by carbon dioxide, or water deluge systems. Governor actuator cabinets may also be protected by gas injection systems. As with detection systems, the extent and type of protection is dependent on company policy and applicable codes and standards.

Special consideration should be given to high degrees of fire detection and protection automation for unattended facilities, underground facilities, and facilities with limited or restricted personnel egress. These automated systems can be expanded to include automatic door closure and ventilation system reconfiguration to exhaust or contain carbon dioxide, exhaust smoke, limit oxygen for combustion, or enhance personnel safety.

The protective systems for fire control should be evaluated and tested. The evaluation should include:

a) For pumped systems—a 100% standby pump preferably with a non-electric prime mover
b) For pressure regulated systems—pressure relief provisions for valve leakage and 100% standby pressure regulator
c) Drainage provisions for full flow testing of deluge valves of generator and step-up transformer sprinkler systems
d) Provision of outside hydrants near the main entrance accesses used for fire fighting
e) Provision for on-off sprinkler heads to reduce extent of water damage
f) Integration of fire suppression systems activation signals with fire detection and equipment shutdown
g) Review the need to increase fire protection water capacity given that the power plant rehabilitation will likely add new equipment and facilities
h) Enhancements for personnel safety, such as generator air housing door interlocks
i) Additional stages of CO_2 injection to maintain adequate CO_2 concentration level
j) Coordination of fire detection and protection with generator protection
k) Use of alternate gas injection system in personnel areas

6.22 Compressed air system

Compressed air systems are especially important to the plant operation if the units are utilized as synchronous condensers. Some of the compressed air systems and their applications are listed in Table 7.

Table 7—Compressed air systems

System	Application
Governor air	Governor hydraulic oil supply
ISO valve air	Shut off valve hydraulic oil system
Station air	Tools, cleaning, generator brakes, instruments
Draft tube depression air	Synchronous condenser
Circuit breaker air	Unit breaker (if air blast type)

Copyright © 2006 IEEE. All rights reserved.

Copyright The Institute of Electrical and Electronics Engineers, Inc.
Provided by IHS under license with IEEE
No reproduction or networking permitted without license from IHS
Not for Resale

The electric motors used for these compressors are some of the largest in a hydroelectric plant. In recent years, highly efficient electric motors have been developed that can replace the standard motor and thereby reduce the cost of operating plant auxiliaries. This possibility of operating cost reduction with improved reliability should be reviewed where a plant is considering rehabilitation. If the controls are to be replaced for improved reliability, then refer to 6.9.

If the compressed air system's air quality or volume size is to be improved then all of the components should be reviewed. These components would include the air receivers, the air dryers, drains, etc. If a compressed air system is used for control (instrument air) consideration should be given to drying, oil-free compressors, and oil-air separation.

6.23 Cranes

Rehabilitation of the cranes may be desirable or even necessary for several reasons. ASME B30.2 [B141] is a recommended reference for understanding the electrical systems of cranes.

a) Safety concerns due to deteriorated crane conditions or modern safety and health standards
b) Inability to maintain the crane properly due to lack of spare parts
c) Changes in lift requirements, operation, or maintenance practices

Since the cranes are required for other rehabilitation work in the plant (such as generator and turbine rehabilitation) it is important to schedule the timing of the crane modifications to avoid interference with other plant rehabilitation work.

Electrical features of older cranes may require rehabilitation. General areas to consider for electrical rehabilitation include the following:

— Replacing the power conductors which connect the plant station service system to the runway conductors. This may be needed if the power cables are deteriorated.
— Adding or modifying power disconnecting devices to meet present day standards
— Replacing mechanical load brakes with electrical load brakes
— Repairing or replacing motors
— Replacing the control system
— Replacing control and power wiring or conductor and collector systems
— Replacing or upgrading the lighting system
— Conversion from dc to ac power

The rehabilitation may give consideration to adding special features such as radio control, pendent control, scales, devices to detect overload or end-of-travel (limit switches), electrical operation of previously non-electric functions, or tandem operation of hooks, trolleys, or bridges.

In all cases of major crane rehabilitation, a review of safety features is important as well as retesting the crane when rehabilitation is complete.

6.24 Lubrication and insulating oil purification equipment

Lubrication and insulating oil purification equipment can reach a point in its life where repair is uneconomical and replacement is necessary. New plant equipment can have more stringent requirements for purification, which are not attainable by the older equipment. The rehabilitation program presents an opportunity to review these requirements and determine if replacement of the equipment is reasonable.

Copyright © 2006 IEEE. All rights reserved.
Copyright The Institute of Electrical and Electronics Engineers, Inc.
Provided by IHS under license with IEEE
No reproduction or networking permitted without license from IHS
Not for Resale

6.25 Telephone or other communication equipment

Older telephone, radio, power line carrier, microwave and other communication equipment tends to consume greater amounts of power, and can be replaced with more efficient and reliable equipment. The rehabilitation program might add requirements for new paths or stations for the existing equipment. In addition, recent advancements in digital plant control and communications applications may dictate changes to communication equipment requirements. Installation of fiber optic communication links may provide a more noise tolerant media when interconnecting new digital controllers with plant computer supervisory control and data acquisition systems. If changes to existing equipment are not economical, new equipment may have to be purchased.

6.26 Plant security

Plant rehabilitation could result in the need to enhance the plant's security system. A change to unmanned plant operation may require the addition of intrusion detection equipment with alarms at the offsite location. In certain instances, the addition of video surveillance equipment may be warranted. The enhancements likely will impact other plant systems, such as communications and supervisory control and data acquisition systems.

6.27 Machine shop

The machine shop is an area that should be considered when undertaking a program of plant rehabilitation. Auxiliary systems (such as service water, compressed air, lighting, fire protection, HVAC, and station service power) that are being rehabilitated may affect this area. Changes in these auxiliary systems could cause changes in the layout or location of the machine shop.

Some consideration could be given to the machines within the shop, though usually the larger ones rarely need replacing. New technology in the equipment within the power plant can necessitate addition of new machine shop equipment but would not necessarily replace existing equipment. For this reason, expansion of the shop area might be considered. Also new equipment for new functions could require additional machine shop equipment.

Copyright © 2006 IEEE. All rights reserved.

Copyright The Institute of Electrical and Electronics Engineers, Inc.
Provided by IHS under license with IEEE
No reproduction or networking permitted without license from IHS Not for Resale

Annex A

(informative)

Bibliography

The following listing of industry standards, recommended practices, and guides is provided as helpful resource material to the engineer engaged in hydroelectric power plant rehabilitation. The most recent edition, with any corrigenda, of each reference is recommended unless specifically stated otherwise in the citation. The engineer is encouraged to review those documents that apply to the desired rehabilitation areas.

Abbreviations used:

ANSI	American National Standards Institute
ASHRAE	American Society of Heating, Refrigeration and Air Conditioning Engineers
ASME	American Society of Mechanical Engineers
CMAA	Crane Manufactures Association of America
EASA	Electrical Apparatus Service Association
EPRI	Electric Power Research Institute
IEC	International Electrotechnical Commission
IEEE	Institute of Electrical and Electronics Engineers
NEMA	National Electrical Manufactures Association
NFPA	National Fire Protection Association
UL	Underwriters Laboratory

The following bibliographic entries pertain to generators and motors:

[B1] ANSI C50.12, American National Standard Requirements for Salient-Pole Synchronous Generators and Generator/Motors for Hydraulic Turbine Applications.

[B2] EASA AR100, Recommended practice for the Repair of Rotating Electrical Apparatus.

[B3] IEEE Press, *Inspection of Large Synchronous Machines*.

[B4] IEEE Std 4™, IEEE Standard Techniques for High Voltage Testing.[7]

[B5] IEEE Std 43™, IEEE Recommended Practice for Testing Insulation Resistance of Rotating Machinery.

[B6] IEEE Std 56™, IEEE Guide for Insulation Maintenance of Large Alternating-Current Rotating Machinery (10 000 kVA and Larger).

[B7] IEEE Std 95™, IEEE Recommended Practice for Insulation Testing of Large AC Rotating Machinery with High Direct Voltage.

[B8] IEEE Std 112™, IEEE Standard Test Procedure for Polyphase Induction Motors and Generators.

[B9] IEEE Std 113™-1985 (Withdrawn), Test Procedures for Direct-Current Machines.[8]

[B10] IEEE Std 114™, Standard Test Procedure for Single-Phase Induction Motors.

[7]The IEEE standards or products referred to in this annex are trademarks of the Institute of Electrical and Electronics Engineers, Inc.

[8]IEEE Std 113-1985 has been withdrawn; however, copies can be obtained from Global Engineering, 15 Inverness Way East, Englewood, CO 80112-5704, USA, tel. (303) 792-2181 (http://global.ihs.com/).

Copyright © 2006 IEEE. All rights reserved.

Copyright The Institute of Electrical and Electronics Engineers, Inc.
Provided by IHS under license with IEEE
No reproduction or networking permitted without license from IHS Not for Resale

[B11] IEEE Std 115™, IEEE Guide: Test Procedures for Synchronous Machines, Part I—Acceptance and Performance Testing, Part II—Test Procedures and Parameter Determination for Dynamic Analysis.

[B12] IEEE Std 117™, IEEE Standard Test Procedure for Evaluation of Systems of Insulating Materials for Random-Wound AC Electric Machinery.

[B13] IEEE Std 118™, IEEE Standard Test Code for Resistance Measurements.

[B14] IEEE Std 275™, IEEE Recommended Practice for Thermal Evaluation of Insulation Systems for Alternating-Current Electric Machinery Employing Form-Wound Preinsulated Stator Coils for Machines Rated 6900 V and Below.

[B15] IEEE Std 286™, IEEE Recommended Practice for Measurement of Power Factor Tip-up of Electric Machinery Stator Coil Insulation.

[B16] IEEE Std 304™, IEEE Test Procedure for Evaluation and Classification of Insulation Systems for Direct-Current Machines

[B17] IEEE Std 399™, IEEE Recommended Practice for Industrial and Commercial Power Systems Analysis.

[B18] IEEE Std 429™, IEEE Recommended Practice for Thermal Evaluation of Sealed Insulation Systems for AC Electric Machinery Employing Form-Wound Preinsulated Stator Coils for Machines Rated 6900 V and Below.

[B19] IEEE Std 432™, IEEE Guide for Insulation Maintenance for Rotating Electric Machinery (5 hp to less than 10 000 hp).

[B20] IEEE Std 433™, IEEE Recommended Practice for Insulation Testing of Large AC Rotating Machinery with High Voltage at Very Low Frequency.

[B21] IEEE Std 434™, IEEE Guide for Functional Evaluation of Insulation Systems for Large High-Voltage Machines.

[B22] IEEE Std 492™, IEEE Guide for Operation and Maintenance of Hydro-Generators.

[B23] NEMA MG1, Motors and Generators.[9]

[B24] NEMA MG2, Safety Standard for Construction and Guide for Selection, Installation and Use of Electric Motors.

[B25] NEMA MG10, Energy Guide for Selection and Use of Polyphase Motors.

[B26] NEMA RP1, Renewal Parts for Motors and Generators (Performance, Selection, and Maintenance).

[B27] UL 547, Thermal Protection for Motors.[10]

[B28] UL 1004, Electric Motors.

[9]NEMA publications are available from Global Engineering Documents, 15 Inverness Way East, Englewood, Colorado 80112, USA (http://global.ihs.com/).

[10]UL standards are available from Global Engineering Documents, 15 Inverness Way East, Englewood, Colorado 80112, USA (http://global.ihs.com/).

Copyright © 2006 IEEE. All rights reserved.

Copyright The Institute of Electrical and Electronics Engineers, Inc.
Provided by IHS under license with IEEE
No reproduction or networking permitted without license from IHS Not for Resale

The following bibliographic entries pertain to hydraulic turbines:

[B29] IEC 61116, Electromechanical Equipment Guide for Small Hydroelectric Installations.[11]

[B30] IEC 61362, Guide to Specification of Hydraulic Turbine Control Systems.

[B31] IEC 60041, Field acceptance tests to determine the hydraulic performance of hydraulic turbines, storage pumps, and pump-turbines.

[B32] IEC 60193, Model acceptance tests to determine the hydraulic performance of hydraulic turbines, storage pumps, and pump-turbines.

[B33] IEC 60545, Guide for commissioning, operation and maintenance of hydraulic turbines.

[B34] IEC 60609, Cavitation pitting evaluation in hydraulic turbines, storage pumps and pump-turbines, including part 2—Cavitation pitting evaluation in pelton turbines.

[B35] EC 60994, Guide for field measurement of vibrations and pulsations in hydraulic machines (turbines, storage pumps and pump-turbines).

[B36] IEC 61364, Technical Report for the nomenclature of hydraulic machines.

[B37] IEC 61366, Technical Report for hydraulic turbines, storage pumps and pump-turbines—tendering documents.

The following bibliographic entries pertain to transformers:

[B38] EASA AR200, *Guide for the Repair of Power and Distribution Transformers.*

[B39] IEEE Std C57.116, IEEE Guide for Transformers Directly Connected to Generators.

[B40] IEEE Std 799™-1987 (Withdrawn), IEEE Guide for Handling and Disposal of Transformer Grade Insulating Liquids Containing PCBs.[12]

[B41] IEEE Std C57.12.00, IEEE Standard General Requirements for Liquid-Immersed Distribution, Power, and Regulating Transformers.

[B42] IEEE Std C57.12.01™, IEEE Standard General Requirements for Dry-Type Distribution and Power Transformers Including Those with Solid-Cast and/or Resin-Encapsulated Windings.

[B43] IEEE Std C57.12.56™, IEEE Standard Test Procedure for Thermal Evaluation of Insulation Systems for Ventilated Dry-Type Power and Distribution Transformers.

[B44] IEEE Std C57.12.90™, IEEE Standard Test Code for Liquid-Immersed Distribution, Power, and Regulating Transformers.

---

[11]IEC publications are available from the Sales Department of the International Electrotechnical Commission, Case Postale 131, 3, rue de Varembé, CH-1211, Genève 20, Switzerland/Suisse (http://www.iec.ch/). IEC publications are also available in the United States from the Sales Department, American National Standards Institute, 11 West 42nd Street, 13th Floor, New York, NY 10036, USA.

[12]IEEE Std 799-1987 has been withdrawn; however, copies can be obtained from Global Engineering, 15 Inverness Way East, Englewood, CO 80112-5704, USA, tel. (303) 792-2181 (http://global.ihs.com/).

Copyright © 2006 IEEE. All rights reserved.

Copyright The Institute of Electrical and Electronics Engineers, Inc.
Provided by IHS under license with IEEE
No reproduction or networking permitted without license from IHS Not for Resale

[B45] IEEE Std C57.12.91™, IEEE Standard Test Code for Dry-Type Distribution and Power Transformers.

[B46] IEEE Std C57.91™, IEEE Guide for Loading Mineral-Oil-Immersed Transformers.

[B47] IEEE Std C57.94™, IEEE Recommended Practice for Installation, Application, Operation, and Maintenance of Dry-Type General Purpose Distribution and Power Transformers.

[B48] IEEE Std C57.98™, IEEE Guide for Transformer Impulse Tests.

[B49] UL 1561, Dry-Type General Purpose and Power Transformers.

The following bibliographic entry pertains to governors:

[B50] IEC 60308, International code for testing of speed governing systems for hydraulic turbines.

The following bibliographic entries pertain to cables and raceways:

[B51] IEEE Std 82™, IEEE Standard Test Procedure for Impulse Voltage Tests on Insulated Conductors.

[B52] IEEE Std 400™, IEEE Guide for Making High-Direct-Voltage Tests on Power Cable Systems in the Field.

[B53] IEEE Std 402™-1974 (Withdrawn), IEEE Guide for Measuring Resistivity of Cable-Insulation Materials at High Direct Voltages.[13]

[B54] IEEE Std 422™-1986 (Withdrawn), IEEE Guide for the Design and Installation of Cable Systems in Power Generating Stations.[14]

[B55] NEMA VE1, Metallic Cable Tray Systems.

[B56] NEMA WC50, Ampacities, Including Effect of Shield Losses for Single-Conductor Solid-Dielectric Power Cable 15 kV Through 69 kV (Copper and Aluminum Conductors).

[B57] NEMA WC51, Ampacities of Cables in Open-Top Cable Trays.

[B58] UL 1072, Medium-Voltage Power Cables.

[B59] UL 1277, Electrical Power and Control Tray Cables with Optional Optical-Fiber Members.

[B60] UL 1569, Metal-Clad Cables.

[13]IEEE Std 402-1974 has been withdrawn; however, copies can be obtained from Global Engineering, 15 Inverness Way East, Englewood, CO 80112-5704, USA, tel. (303) 792-2181 (http://global.ihs.com/).

[14]IEEE Std 422-1986 has been withdrawn; however, copies can be obtained from Global Engineering, 15 Inverness Way East, Englewood, CO 80112-5704, USA, tel. (303) 792-2181 (http://global.ihs.com/).

--`,,```,,,,````-`-`,,`,,`,`,,`---

Copyright © 2006 IEEE. All rights reserved.

Copyright The Institute of Electrical and Electronics Engineers, Inc.
Provided by IHS under license with IEEE
No reproduction or networking permitted without license from IHS Not for Resale

The following bibliographic entries pertain to protection and relaying:

[B61] IEEE Std 242™, IEEE Recommended Practice for Protection and Coordination of Industrial and Commercial Power Systems.

[B62] IEEE Std C37.91™, IEEE Guide for Protective Relay Applications to Power Transformers.

[B63] IEEE Std C37.96™, IEEE Guide for AC Motor Protection.

[B64] IEEE Std C37.97™, IEEE Guide for Protective Relay Applications to Power System Buses.

[B65] IEEE Std C37.101™, IEEE Guide for Generator Ground Protection.

[B66] IEEE Std C37.106™, IEEE Guide for Abnormal Frequency Protection for Power Generating Plants.

[B67] IEEE Std C57.13.1™, IEEE Guide for Field Testing of Relaying Current Transformers.

The following bibliographic entries pertain to excitation:

[B68] IEEE Std 421.1™, IEEE Standard Definitions for Excitation Systems for Synchronous Machines.

[B69] IEEE Std 421.2, IEEE Guide for Identification, Testing, and Evaluation of the Dynamic Performance of Excitation Control Systems.

[B70] IEEE Std 421.3™, IEEE Standard for High-Potential Test Requirements for Excitation Systems for Synchronous Machines.

The following bibliographic entries pertain to insulation:

[B71] IEEE Std 1, IEEE Standard General Principles for Temperature Limits in the Rating of Electrical Equipment and for the Evaluation of Electrical Insulation.

[B72] ANSI C29.1, Test Methods for Electrical Power Insulators.

[B73] ANSI C92.1, Power Systems—Insulation Coordination.

[B74] IEEE Std 62™, IEEE Guide for Diagnostic Field Testing of Electric Power Apparatus —Part 1: Oil Filled Power Transformers, Regulators, and Reactors.

[B75] IEEE Std C57.106™, IEEE Guide for Acceptance and Maintenance of Insulating Oil in Equipment.

[B76] IEEE Std 454™ (Withdrawn), IEEE Recommended Practice for the Detection and Measurement of Partial Discharge (Corona) During Dielectric Tests.

The following bibliographic entries pertain to batteries, UPS, and standby power systems:

[B77] IEEE Std 944, IEEE Recommended Practice for the Application and Testing of Uninterruptible Power Supplies for Power Generating Stations.

--`,,```,,,,````-`-`,,`,,`,`,,`---
Copyright © 2006 IEEE. All rights reserved.
Copyright The Institute of Electrical and Electronics Engineers, Inc.
Provided by IHS under license with IEEE
No reproduction or networking permitted without license from IHS
Not for Resale

[B78] IEEE Std 446™, IEEE Recommended Practice for Emergency and Standby Power Systems for Industrial and Commercial Applications.

[B79] IEEE Std 450™, IEEE Recommended Practice for Maintenance, Testing, and Replacement of Vented Lead-Acid Batteries for Stationary Applications.

[B80] IEEE Std 484™, IEEE Recommended Practice for Installation Design and Installation of Vented Lead-Acid Batteries for Stationary Applications.

[B81] IEEE Std 485™, IEEE Recommended Practice for Sizing Lead-Acid Batteries for Stationary Applications.

[B82] IEEE Std 1115™, IEEE Recommended Practice for Sizing Nickel-Cadmium Batteries for Stationary Applications.

[B83] IEEE Std 1184™, IEEE Guide for the Selection and Sizing of Batteries for Uninterruptible Power Systems.

[B84] IEEE Std 1184™/Interpretation 1-January 2005, Interpretation for IEEE Guide for the Selection and Sizing of Batteries for Uninterruptible Power Systems.

[B85] IEEE Std 1187™, IEEE Recommended Practice for Installation Design and Installation of Valve Regulated Lead-Acid Storage Batteries for Stationary Applications.

[B86] IEEE Std 1188™, IEEE Recommended Practice for Maintenance, Testing, and Replacement of Valve-Regulated Lead-Acid (VRLA) Batteries for Stationary Applications.

[B87] IEEE Std 1189™, IEEE Guide for Selection of Valve-Regulated Lead-Acid (VRLA) Batteries for Stationary Applications.

[B88] NEMA IB8, Lead-Acid Industrial Storage Batteries for Stationary Service.

[B89] NEMA PE1, Uninterruptible Power Systems.

[B90] NEMA PE5, Utility Type Battery Chargers.

[B91] UL 1236, Battery Chargers.

[B92] UL 1564, Industrial Battery Chargers.

The following bibliographic entries pertain to breakers, switchgear, panelboards, and motor control centers:

[B93] ANSI C37.06, American National Standard—AC High-Voltage Circuit Breakers Rated on a Symmetrical Current Basis—Preferred Ratings and Related Required Capabilities.

[B94] ANSI C37.9, American Standard Test Code for Power Circuit Breakers.

[B95] ANSI C37.12, American National Standard for AC High-Voltage Circuit Breakers Rated on a Symmetrical Current Basis—Specifications Guide.

[B96] IEEE Std 141™, IEEE Recommended Practice for Electric Power Distribution for Industrial Plants.

Copyright © 2006 IEEE. All rights reserved.

Copyright The Institute of Electrical and Electronics Engineers, Inc.
Provided by IHS under license with IEEE
No reproduction or networking permitted without license from IHS Not for Resale

[B97] IEEE Std C37.04™, IEEE Standard Rating Structure for AC High-Voltage Circuit Breakers.

[B98] IEEE Std C37.09™, IEEE Standard Test Procedure for AC High-Voltage Circuit Breakers Rated on a Symmetrical Current Basis.

[B99] IEEE Std C37.010™, IEEE Application Guide for AC High-Voltage Circuit Breakers Rated on a Symmetrical Current Basis.

[B100] IEEE Std C37.011™, IEEE Application Guide for Transient Recovery Voltage for AC High-Voltage Circuit Breakers Rated on a Symmetrical Current Basis.

[B101] IEEE Std C37.081™, IEEE Guide for Synthetic Fault Testing of AC High-Voltage Circuit Breakers Rated on a Symmetrical Current Basis.

[B102] IEEE Std C37.13™, IEEE Standard for Low-Voltage AC Power Circuit Breakers Used In Enclosures.

[B103] IEEE Std C37.14™, IEEE Standard for Low-Voltage DC Power Circuit Breakers Used In Enclosures.

[B104] IEEE Std C37.16™, American National Standard for Switchgear - Low-Voltage Power Circuit Breakers and AC Power Circuit Protectors—Preferred Ratings, Related Requirements, and Application Recommendations.

[B105] IEEE Std C37.20.1™, IEEE Standard for Metal-Enclosed Low-Voltage Power Circuit Breaker Switchgear.

[B106] IEEE Std C37.20.2™, IEEE Standard for Metal-clad and Station-Type Cubicle Switchgear.

[B107] IEEE Std C37.20.3™, IEEE Standard for Metal-Enclosed Interrupter Switchgear.

[B108] IEEE Std C37.29™, IEEE Standard for Low-Voltage AC Power Circuit Protectors Used in Enclosures.

[B109] IEEE Std C37.50™, American National Standard for Switchgear—Low-Voltage AC Power Circuit Breakers Used in Enclosures—Test Procedures.

[B110] NEMA ICS2.2, Maintenance of a Motor Controller After a Fault Condition.

[B111] NEMA ICS2.3, Instructions for the Handling, Installation, Operation and Maintenance of Motor Control Centers.

[B112] NEMA PB1.1, General Instructions for Proper Installation, Operation, and Maintenance of Panelboards Rated 600 Volts or Less.

[B113] NEMA PB2.1, General Instructions for Proper Handling, Installation, Operation and Maintenance of Deadfront Distribution Switchboards Rated 600 Volts or Less.

[B114] UL 489, Molded-Case Circuit Breakers and Circuit-Breaker Enclosures, Seventh Edition.

[B115] UL 845, Motor Control Centers.

[B116] UL 1066, Low-Voltage AC and DC Power Circuit Breakers Used in Enclosures.

--`,,```,,,,````-`-`,,`,,`,`,,`---
Copyright © 2006 IEEE. All rights reserved.
Copyright The Institute of Electrical and Electronics Engineers, Inc.
Provided by IHS under license with IEEE
No reproduction or networking permitted without license from IHS
Not for Resale

[B117] UL 1558, Metal-Enclosed Low-Voltage Power Circuit Breaker Switchgear.

The following bibliographic entries pertain to control and SCADA:

[B118] IEEE Std 94™-1970 (Withdrawn), IEEE Standard Definitions of Terms for Automatic Control on Electric Power Systems.[15]

[B119] IEEE Std C37.1™, IEEE Standard Definition, Specification, and Analysis of Systems Used for Supervisory Control, Data Acquisition, and Automatic Control.

The following bibliographic entries pertain to grounding:

[B120] [B120] IEEE Std 80™, IEEE Guide for Safety in AC Substation Grounding.

[B121] IEEE Std 142™, IEEE Recommended Practice for Grounding of Industrial and Commercial Power Systems.

[B122] IEEE Std 367™, IEEE Recommended Practice for Determining the Electric Power Station Ground Potential Rise and Induced Voltage from a Power Fault.

[B123] IEEE Std 665™, IEEE Standard for Generating Station Grounding.

[B124] IEEE Std 1050™, IEEE Guide for Instrumentation and Control Equipment Grounding in Generating Stations

[B125] IEEE Std 1050™ , Correction Sheet, 7 April 1999, Corrections to IEEE Guide for Instrumentation and Control Equipment Grounding in Generating Stations.

[B126] IEEE Std C62.92.2, IEEE Guide for the Application of Neutral Grounding in Electrical Utility Systems, Part II—Grounding of Synchronous Generator Systems.

The following bibliographic entries pertain to definitions, codes, references, and tables:

[B127] Accredited Standards Committee C2-2002, National Electrical Safety Code® (NESC®).[16]

[B128] ANSI C84.1, Electric Power Systems and Equipment-Voltage Ratings (60 Hz).

[B129] EPRI EL-5036, *Power Plant Electrical Reference Series*, Volumes 1-16.

[B130] IEEE Std 120™, IEEE Master Test Guide for Electrical Measurements in Power Circuits.

[B131] IEEE Std 505™, IEEE Standard Nomenclature for Generating Station Electric Power Systems.

[B132] IEEE Std 762™-1987, IEEE Standard Definitions for Use in Reporting Electric Generating Unit Reliability, Availability, and Productivity.

---

[15]IEEE Std 94-1970 has been withdrawn; however, copies can be obtained from Global Engineering, 15 Inverness Way East, Englewood, CO 80112-5704, USA, tel. (303) 792-2181 (http://global.ihs.com/).

[16]The NESC is available from the Institute of Electrical and Electronics Engineers, 445 Hoes Lane, P.O. Box 1331, Piscataway, NJ 08855-1331, USA (http://standards.ieee.org/).

Copyright © 2006 IEEE. All rights reserved.

--`,,```,,,,````-`-`,,`,,`,`,,`---

Copyright The Institute of Electrical and Electronics Engineers, Inc.
Provided by IHS under license with IEEE
No reproduction or networking permitted without license from IHS Not for Resale

[B133] NFPA 70-2002, National Electrical Code® (NEC®).[17]

The following bibliographic entries pertain to maintenance:

[B134] IEC 60545, Guide for Commissioning, Operation and Maintenance of Hydraulic Turbines.

[B135] IEC 60805, Guide for commissioning, operation and maintenance of storage pumps and of pump-turbines operating as pumps.

[B136] IEEE Std 492™, IEEE Guide for Operation and Maintenance of Hydro-Generators.

[B137] IEEE Std 640™-1985 (Withdrawn) IEEE Guide for Power Station Noise Control.[18]

[B138] NFPA 70B, Recommended Practice for Electrical Equipment Maintenance.

The following bibliographic entries pertain to fire protection:

[B139] NFPA 851, Recommended Practice for Fire Protection for Hydroelectric Generating Plants

[B140] NFPA 907MP, Manual on the Investigation of Fires of Electrical Origin.

The following bibliographic entries pertain to cranes:

[B141] ASME B30.2, Overhead and Gantry Cranes, Top Running Bridge Single Multiple Girder Top Running Trolley Hoist.

[B142] CMAA 70 Specifications for Overhead Traveling Cranes.

The following bibliographic entries are miscellaneous:

[B143] ASHRAE *Handbook of Fundamentals*.

[B144] ASME LOS-5D1 1972(R1980) (Discontinued 1993) Recommended practices for the Design of Oil Systems for Lubrication and Control of Hydroelectric Equipment.

[B145] HCI Publications, *The Guide to Hydropower Mechanical Design*

[B146] IEEE 100, *The Authoritative Dictionary of IEEE Standards Terms*, Seventh Edition.

[B147] EPRI EL-5036 *Power Plant Electrical Reference Series*, Volumes 1-16.

[17]The NEC is published by the National Fire Protection Association, Batterymarch Park, Quincy, MA 02269, USA (http://www.nfpa.org/). Copies are also available from the Institute of Electrical and Electronics Engineers, 445 Hoes Lane, P.O. Box 1331, Piscataway, NJ 08855-1331, USA (http://standards.ieee.org/).

[18]IEEE Std 640-1985 has been withdrawn; however, copies can be obtained from Global Engineering, 15 Inverness Way East, Englewood, CO 80112-5704, USA, tel. (303) 792-2181 (http://global.ihs.com/).

Copyright © 2006 IEEE. All rights reserved.

Copyright The Institute of Electrical and Electronics Engineers, Inc.
Provided by IHS under license with IEEE
No reproduction or networking permitted without license from IHS Not for Resale

[B148] EPRI EM-2407 *Increased Efficiency of Hydroelectric Power.*

[B149] EPRI GS-6419 *Hydropower Plant Modernization Guide*, Volumes 1-3.

[B150] U.S. Department of Energy *Building Energy Databook*.

Copyright © 2006 IEEE. All rights reserved.

Copyright The Institute of Electrical and Electronics Engineers, Inc.
Provided by IHS under license with IEEE
No reproduction or networking permitted without license from IHS
Not for Resale