IEC 60728-1

Edition 4.0 2007-09

INTERNATIONAL STANDARD

Cable networks for television signals, sound signals and interactive services – Part 1: System performance of forward paths



IEC 60728-1:2007(E)

Copyright International Electrotechnical Commission
Provided by IHS under license with IEC
No reproduction or networking permitted without license from IHS
Not for Resale



THIS PUBLICATION IS COPYRIGHT PROTECTED

Copyright © 2007 IEC, Geneva, Switzerland

All rights reserved. Unless otherwise specified, no part of this publication may be reproduced or utilized in any form or by any means, electronic or mechanical, including photocopying and microfilm, without permission in writing from either IEC or IEC's member National Committee in the country of the requester.

If you have any questions about IEC copyright or have an enquiry about obtaining additional rights to this publication, please contact the address below or your local IEC member National Committee for further information.

IEC Central Office
3, rue de Varembé
CH-1211 Geneva 20
Switzerland
Email: inmail@iec.ch
Web: www.iec.ch

About the IEC

The International Electrotechnical Commission (IEC) is the leading global organization that prepares and publishes International Standards for all electrical, electronic and related technologies.

About IEC publications

The technical content of IEC publications is kept under constant review by the IEC. Please make sure that you have the latest edition, a corrigenda or an amendment might have been published.

- Catalogue of IEC publications: www.iec.ch/searchpub

The IEC on-line Catalogue enables you to search by a variety of criteria (reference number, text, technical committee,…). It also gives information on projects, withdrawn and replaced publications.

- IEC Just Published: www.iec.ch/online_news/justpub

Stay up to date on all new IEC publications. Just Published details twice a month all new publications released. Available on-line and also by email.

- Electropedia: www.electropedia.org

The world's leading online dictionary of electronic and electrical terms containing more than 20 000 terms and definitions in English and French, with equivalent terms in additional languages. Also known as the International Electrotechnical Vocabulary online.

- Customer Service Centre: www.iec.ch/webstore/custserv

If you wish to give us your feedback on this publication or need further assistance, please visit the Customer Service Centre FAQ or contact us:

Email: csc@iec.ch
Tel.: +41 22 919 02 11
Fax: +41 22 919 03 00

--`,,```,,,,````-`-`,,`,,`,`,,`---

Copyright International Electrotechnical Commission
Provided by IHS under license with IEC
No reproduction or networking permitted without license from IHS Not for Resale

IEC 60728-1

Edition 4.0 2007-09

INTERNATIONAL STANDARD

Cable networks for television signals, sound signals and interactive services – Part 1: System performance of forward paths

INTERNATIONAL
ELECTROTECHNICAL
COMMISSION

PRICE CODE XG

ICS 33.060.40

ISBN 2-8318-9264-3

Copyright International Electrotechnical Commission
Provided by IHS under license with IEC
No reproduction or networking permitted without license from IHS

Not for Resale

CONTENTS

FOREWORD 9
INTRODUCTION 11

1 Scope 16
2 Normative references 17
3 Terms, definitions, symbols and abbreviations 19
3.1 Terms and definitions 19
3.2 Symbols 29
3.3 Abbreviations 30
4 Methods of measurement at system outlet 32
4.1 General 32
4.2 Mutual isolation between system outlets 34
4.2.1 Introduction 34
4.2.2 Equipment required 34
4.2.3 Connection of the equipment 34
4.2.4 Measurement procedure 35
4.2.5 Presentation of the results 36
4.3 Amplitude response within a channel 36
4.3.1 Introduction 36
4.3.2 Equipment required 36
4.3.3 Connection of the equipment 36
4.3.4 Measurement procedure 37
4.3.5 Presentation of the results 39
4.4 Chrominance-luminance gain and delay inequalities 39
4.4.1 Introduction 39
4.4.2 Equipment required 40
4.4.3 Connection of the equipment 40
4.4.4 Measurement procedure 40
4.4.5 Presentation of the results 42
4.5 Non-linear distortion 42
4.5.1 General 42
4.5.2 Intermodulation 42
4.5.3 Composite beat 42
4.5.4 Composite crossmodulation 47
4.5.5 Intermodulation noise 47
4.5.6 Hum modulation of carriers 47
4.5.7 Differential gain and phase 52
4.6 Carrier-to-noise ratio 56
4.6.1 Introduction 56
4.6.2 Equipment required 56
4.6.3 Connection of the equipment 56
4.6.4 Measurement set-up 57
4.6.5 Measurement procedure 57
4.6.6 Presentation of the results 58
4.7 Echoes 58
4.7.1 Introduction 58

--`,,```,,,,````-`-`,,`,,`,`,,`---

Copyright International Electrotechnical Commission
Provided by IHS under license with IEC
No reproduction or networking permitted without license from IHS Not for Resale

4.7.2 Equipment required 59
4.7.3 Connection of the equipment 60
4.7.4 Measurement procedure 60
4.7.5 Presentation of the results 60
4.8 AM-VSB television, FM radio and FM television signal level 60
4.8.1 General 60
4.8.2 Definitions for NTSC, PAL and SECAM systems 61
4.8.3 Equipment required 61
4.8.4 Measurement procedure 61
4.8.5 Presentation of the results 62
4.9 Data echo rating and data delay inequality 62
4.10 Interference in FM sound radio channels 62
4.11 Methods of measurement for digitally modulated signals 62
4.11.1 Introduction 62
4.11.2 Basic assumptions and measurement interfaces 62
4.11.3 Signal level for digitally modulated signals 65
4.11.4 RF signal-to-noise ratio $S_{D,RF}/N$ for digitally modulated signals 66
4.11.5 Bit error ratio (BER) 68
4.11.6 *BER* versus E_b/N_0 or *C/N* 69
4.11.7 Noise margin 72
4.11.8 Modulation error ratio (MER) 74
4.11.9 Phase jitter 76
4.11.10 Phase noise of an RF carrier 78
5 Performance requirements at system outlet 81
5.1 General 81
5.2 Impedance 82
5.3 Requirements at the terminal input 82
5.3.1 Signal level 82
5.3.2 Other parameters 83
5.4 Carrier levels at system outlets 83
5.4.1 Minimum and maximum carrier levels 83
5.4.2 Carrier level differences 84
5.5 Mutual isolation between system outlets 85
5.5.1 Isolation between two subscribers 85
5.5.2 Isolation between individual outlets in one household 85
5.5.3 Isolation between forward and return path 85
5.6 Frequency response within a television channel at any system outlet 86
5.6.1 Amplitude response 86
5.6.2 Group delay 86
5.7 Long-term frequency stability of distributed carrier signals at any system outlet 87
5.8 Random noise 88
5.9 Interference to television channels 89
5.9.1 Single-frequency interference 89
5.9.2 Single-channel intermodulation interference 90
5.9.3 Multiple frequency intermodulation interference 90
5.9.4 Intermodulation noise 90
5.9.5 Cross-modulation 91
5.10 Video baseband requirements 91

Copyright International Electrotechnical Commission
Provided by IHS under license with IEC
No reproduction or networking permitted without license from IHS Not for Resale

5.10.1 Differential gain and phase in any television channel 91
5.10.2 Echoes 91
5.10.3 Amplitude and phase response for PALplus signals 91
5.11 Hum modulation of carriers in television channels 91
5.12 Requirements for data signal transmission 92
5.12.1 Data signals carried in the structure of a television signal 92
5.12.2 Data signals other than those carried within the structure of a television signal 92
5.13 Digitally modulated signals – Additional performance requirements 93
5.13.1 DVB (PSK, QAM, OFDM) performance 93
5.13.2 NICAM performance 94
5.13.3 DAB performance 94
5.14 FM sound radio – Additional performance requirements 95
5.14.1 Amplitude response within an FM channel 95
5.14.2 Phase response within an FM channel 95
5.14.3 Interference within an FM channel 95
5.14.4 AM hum modulation on FM sound carriers 95
5.14.5 Echoes within an FM channel 95
6 Performance requirements at receiving antennas 95
6.1 Introduction 95
6.2 Method of measurement of field strength 96
6.2.1 Introduction 96
6.2.2 Equipment required 96
6.2.3 Connection of the equipment 96
6.2.4 Measurement procedure 96
6.2.5 Presentation of the results 98
6.3 Requirements 98
6.3.1 General 98
6.3.2 Field strength requirements 98
6.3.3 Quality of received signals 100
6.3.4 Safety 104
6.3.5 Electromagnetic compatibility (EMC) 104
6.4 Interference reduction 104
6.4.1 General 104
6.4.2 Active antennas 104
7 Performance requirements at home network interfaces of cable networks 104
7.1 Introduction 104
7.2 Requirements at HNI1 for passive coaxial home networks 106
7.2.1 General 106
7.2.2 Carrier levels at the HNI1 106
7.2.3 Mutual isolation between two HNI1 108
7.2.4 Frequency response within any television channel at the HNI1 109
7.2.5 Long-term frequency stability of distributed carrier signals at HNI1 110
7.2.6 Random noise at the HNI1 110
7.2.7 Interference to television channels at the HNI1 110
7.2.8 Return path requirements at the HNI1 111
7.3 Requirements at HNI2 for active coaxial home networks 111
7.3.1 Carrier levels at the HNI2 111
7.3.2 Mutual isolation between two HNI2 113

--`,,```,,,,````-`-`,,`,,`,`,,`---

Copyright International Electrotechnical Commission
Provided by IHS under license with IEC
No reproduction or networking permitted without license from IHS Not for Resale

7.3.3 Frequency response within any television channel at the HNI2 113
7.3.4 Long-term frequency stability of distributed carrier signals at HNI2 114
7.3.5 Random noise at HNI2 114
7.3.6 Interference to television channels at the HNI2 116
7.3.7 Return path requirements at the HNI2 117
7.4 Requirements at HNI3 and at system outlet or terminal input when the home network is mainly of balanced type 118
7.4.1 Introduction 118
7.4.2 Requirements at HNI3 118
7.4.3 Requirements at system output 118
7.4.4 Additional requirements at HNI3 for upstream transmission 119
7.5 Requirements at HNI3 (Case C) 119
7.6 Requirements at HNI3 (Case D) 119

Annex A (normative) Calibration of modulation depth 120
Annex B (normative) Equipment required – Additional items 121
Annex C (normative) Preliminary checks on the measuring equipment for carrier-to-noise ratio 122
Annex D (normative) Correction factors 123
Annex E (normative) Calibration of the measuring receiver 124
Annex F (normative) Correction factors for noise 125
Annex G (normative) Null packet and PRBS definitions 127
Annex H (normative) Digital signal level and bandwidth 129
Annex I (normative) Correction factor for a spectrum analyser 132
Annex J (informative) Differences in some countries 133
Annex K (informative) Examples of home network implementation 143

Bibliography 151

Figure 1 – Example of a master antenna television system (MATV) for terrestrial reception 12
Figure 2 – Example of the headend of a master antenna television system for satellite (SMATV) reception 13
Figure 3 – Example of a master antenna television system for terrestrial and satellite (SMATV) reception 13
Figure 4 – Example of a cabled distribution system for television and sound signals 14
Figure 5 – System model for downstream direction of a cable network for television and sound signals (CATV) 15
Figure 6 – Arrangement of test equipment for measurement of mutual isolation between system outlets 35
Figure 7 – Arrangement of test equipment for measurement of frequency response within a channel 37
Figure 8 – Interpretation of displays for measurement of frequency response within a channel 38
Figure 9 – Test signal (signal *F* for 625-line systems) employed for chrominance/luminance gain and delay inequality 39
Figure 10 – Test signal (signal B2 for 625-line systems) employed for chrominance/luminance gain and delay inequality 39

Copyright International Electrotechnical Commission
Provided by IHS under license with IEC
No reproduction or networking permitted without license from IHS Not for Resale

Figure 11 – Arrangement of test equipment for measurement of chrominance/luminance gain and delay inequality 40
Figure 12 – Displayed pulses: chrominance low and lagging 41
Figure 13 – Displayed pulses: chrominance high and leading 41
Figure 14 – Connection of test equipment for the measurement of non-linear distortion by composite beat 43
Figure 15 – Weighting curve for 625-line system B, G and D1 (PAL): CW interference with no special (frequency offset) control 45
Figure 16 – Weighting curve for 625-line system I (PAL): CW interference with no special (frequency offset) control 45
Figure 17 – Weighting curve for 625-line systems D and K (PAL): CW interference with no special (frequency offset) control 46
Figure 18 – Weighting curve for 625-line system L (SECAM): CW interference with no special (frequency offset) control 46
Figure 19 – Hum modulation envelope (x = percentage peak-to-peak hum modulation) 47
Figure 20 – Calibrated potential divider 48
Figure 21 – Stable variable DC source 48
Figure 23 – Oscilloscope display 49
Figure 24 – Connection of equipment for hum modulation measurement (AC method) 51
Figure 25 – Signal D2 52
Figure 26 – Example of the modified staircase waveform 53
Figure 27 – Arrangement of test equipment for measurement of differential gain and phase 54
Figure 28 – Arrangement of test equipment for carrier-to-noise ratio measurement 57
Figure 29 – Echo rating graticule 59
Figure 30 – Arrangement of test equipment for measurement of echo rating 60
Figure 31 – I/Q signal source and RF modulator 63
Figure 32 – Reference receiver 64
Figure 33 – Test set-up for BER measurement 68
Figure 34 – Test set-up for BER measurement versus E_b/N_0 or C/N and noise margin measurement 70
Figure 35 – Example of *BER* measurement versus E_b/N_0 72
Fgure 36 – Example of *BER* measurement versus C/N 72
Figure 37 – Test set-up for modulation error ratio (MER) measurement and phase jitter measurement 75
Figure 38 – Example of constellation diagram for a 64 QAM modulation format 76
Figure 39 – Example of constellation diagram for a 64 QAM modulation format with arc sections due to phase jitter 78
Figure 40 – Test set-up for phase noise measurement 79
Figure 41 – Example of mask for phase noise measurements: PSK, APSK and QAM formats 81
Figure 42 – Example of mask for phase noise measurements: OFDM format 81
Figure 43 – Home network types used to define the requirements at HNIi (coaxial) 105
Figure A.1 – Calibration of modulation depth 120
Figure F.1 – Noise correction factor *CF* versus measured level difference *D* 126

Copyright International Electrotechnical Commission
Provided by IHS under license with IEC
No reproduction or networking permitted without license from IHS Not for Resale

Figure J.1 – Mask group delay characteristic for PAL signals with FM-FM sound (Netherlands) 135
Figure J.2 – Single-frequency interference (VSB-AM NTSC) (Japan) 136
Figure J.3 – Single-frequency interference (VSB-AM HDTV) (Japan) 137
Figure J.4 – Single-frequency interference (64 QAM digital) (Japan) 137
Figure J.5 – Requirement for echo loss in relation to the time delay of the reflected signal (Netherlands) 138
Figure J.6 – Echoes (VSB-AM NTSC) (Japan) 139
Figure J.7 – Echoes (FM NTSC) (Japan) 139
Figure J.8 – Echoes (FM HDTV) (Japan) 140
Figure J.9 – Echoes (VSB-AM HDTV) (Japan) 140
Figure J.10 – Echoes (64 QAM digital) (Japan) 141
Figure K.1 – Examples of HNI 145

Table 1 – Application of the methods of measurement 33
Table 2 – Residual carrier reduction factors 50
Table 3 – Frequency distance f_m 81
Table 4 – Carrier signal levels at any system outlet 83
Table 5 – Maximum level differences at any system outlet between distributed television channels 84
Table 6 – Mutual isolation 85
Table 7 – Residual carrier level at television or FM radio output within the same outlet or between two different outlets 86
Table 8 – Amplitude response variation 86
Table 9 – Group delay variation 87
Table 10 – Maximum deviation of conversion frequency for digitally modulated DVB signals 88
Table 11 – Carrier-to-noise ratios at system outlet (television) 88
Table 12 – Carrier-to-noise ratios at system outlet (radio) 89
Table 13 – Differential gain and phase in television channels 91
Table 14 – Modulation error ratio MER of a DVB signal 93
Table 15 – Phase jitter of a DVB signal 93
Table 16 – Phase noise of a DVB signal (PSK, APSK and QAM) 94
Table 17 – Phase noise of a DVB-T signal (COFDM) 94
Table 18 – Minimum field strength levels recommended by ITU-R 99
Table 19 – Minimum field strength levels recommended by CEPT [3] 99
Table 20 – Minimum signal level at the headend input for the reception of analogue sound broadcasting 100
Table 21 – Minimum signal level at the headend input for the reception of analogue television broadcasting 100
Table 22 – Minimum signal level at the headend input for the reception of DAB signals at an error ratio of $1 \cdot 10^{-4}$ and code rate 1/2 101
Table 23 – Minimum signal level and RF signal-to-noise ratio at the headend input for stationary reception 101
Table 24 – Minimum signal level and carrier-to-noise ratio at the headend input for the reception of FM modulated satellite signals 102

Copyright International Electrotechnical Commission
Provided by IHS under license with IEC
No reproduction or networking permitted without license from IHS Not for Resale

Table 25 – Minimum RF signal-to-noise ratio at the headend input for the reception of DVB-S or DVB-S2 satellite signals 102
Table 26 – Minimum values for signal-to-disturbance ratio 103
Table 27 – Minimum values for signal-to-echo ratio 103
Table 28 – Signal level at HNI1 107
Table 29 – Maximum level differences at HNI1 108
Table 30 – Mutual isolation between two HNI1 109
Table 31 – Amplitude response variation at HNI1 109
Table 32 – Group delay variation at HNI1 110
Table 33 – Signal level at HNI2 112
Table 34 – Maximum level differences at HNI2 113
Table 35 – Amplitude response variation at HNI2 114
Table 36 – Group delay variation at HNI2 114
Table 37 – Carrier-to-noise ratios at HNI2 (television) 115
Table 38 – Carrier-to-noise ratios at HNI2 (radio) 116
Table 39 – Minimum signal level at coaxial terminal input (case A) or at coaxial system outlet (case B) 118
Table F.1 – Noise correction factor 125
Table G.1 – Null transport stream packet definition 128
Table H.1 – Examples of bandwidths for digital modulation techniques 131
Table K.1 – Example of home network with coaxial cabling (passive) from HNI1 to SO 149
Table K.2 – Example of home network with coaxial cabling (active) from HNI2 to SO 149
Table K.3 – Example of home network with balanced pair cables (active) from HNI3 to coaxial terminal input (case A) 150
Table K.4 – Example of home network with balanced pair cables (active) from HNI3 to coaxial SO (case B) 150

Copyright International Electrotechnical Commission
Provided by IHS under license with IEC
No reproduction or networking permitted without license from IHS Not for Resale

INTERNATIONAL ELECTROTECHNICAL COMMISSION

CABLE NETWORKS FOR TELEVISION SIGNALS, SOUND SIGNALS AND INTERACTIVE SERVICES –

Part 1: System performance of forward paths

FOREWORD

1) The International Electrotechnical Commission (IEC) is a worldwide organization for standardization comprising all national electrotechnical committees (IEC National Committees). The object of IEC is to promote international co-operation on all questions concerning standardization in the electrical and electronic fields. To this end and in addition to other activities, IEC publishes International Standards, Technical Specifications, Technical Reports, Publicly Available Specifications (PAS) and Guides (hereafter referred to as "IEC Publication(s)"). Their preparation is entrusted to technical committees; any IEC National Committee interested in the subject dealt with may participate in this preparatory work. International, governmental and non-governmental organizations liaising with the IEC also participate in this preparation. IEC collaborates closely with the International Organization for Standardization (ISO) in accordance with conditions determined by agreement between the two organizations.
2) The formal decisions or agreements of IEC on technical matters express, as nearly as possible, an international consensus of opinion on the relevant subjects since each technical committee has representation from all interested IEC National Committees.
3) IEC Publications have the form of recommendations for international use and are accepted by IEC National Committees in that sense. While all reasonable efforts are made to ensure that the technical content of IEC Publications is accurate, IEC cannot be held responsible for the way in which they are used or for any misinterpretation by any end user.
4) In order to promote international uniformity, IEC National Committees undertake to apply IEC Publications transparently to the maximum extent possible in their national and regional publications. Any divergence between any IEC Publication and the corresponding national or regional publication shall be clearly indicated in the latter.
5) IEC provides no marking procedure to indicate its approval and cannot be rendered responsible for any equipment declared to be in conformity with an IEC Publication.
6) All users should ensure that they have the latest edition of this publication.
7) No liability shall attach to IEC or its directors, employees, servants or agents including individual experts and members of its technical committees and IEC National Committees for any personal injury, property damage or other damage of any nature whatsoever, whether direct or indirect, or for costs (including legal fees) and expenses arising out of the publication, use of, or reliance upon, this IEC Publication or any other IEC Publications.
8) Attention is drawn to the Normative references cited in this publication. Use of the referenced publications is indispensable for the correct application of this publication.
9) Attention is drawn to the possibility that some of the elements of this IEC Publication may be the subject of patent rights. IEC shall not be held responsible for identifying any or all such patent rights.

International Standard IEC 60728-1 has been prepared by technical area 5: Cable networks for television signals, sound signals and interactive services, of IEC technical committee 100: Audio, video and multimedia systems and equipment.

This fourth edition cancels and replaces the third edition published in 2001, of which it constitutes a technical revision.

This edition includes the following significant technical changes with respect to the previous edition:

- redrafting of introduction and scope to reflect the current scope of IEC TC 100/TA 5;
- redrafting of measurement procedure for bit error ratio (BER);
- updating of performance requirements in Clause 5;
- inclusion of new Clause 6;
- inclusion of new Clause 7;

Copyright International Electrotechnical Commission
Provided by IHS under license with IEC
No reproduction or networking permitted without license from IHS Not for Resale

- inclusion of new Annex K.

The text of this standard is based on the following documents:

FDIS	Report on voting
100/1242/FDIS	100/1274/RVD

Full information on the voting for the approval of this standard can be found in the report on voting indicated in the above table.

This publication has been drafted in accordance with the ISO/IEC Directives, Part 2.

The list of all the parts of the IEC 60728 series, under the general title *Cable networks for television signals, sound signals and interactive services*, can be found on the IEC website.

For the differences in some countries, see Annex J.

The committee has decided that the contents of this publication will remain unchanged until the maintenance result date indicated on the IEC web site under "http://webstore.iec.ch" in the data related to the specific publication. At this date, the publication will be

- reconfirmed;
- withdrawn;
- replaced by a revised edition, or
- amended.

A bilingual version of this publication may be issued at a later date.

Copyright International Electrotechnical Commission
Provided by IHS under license with IEC
No reproduction or networking permitted without license from IHS Not for Resale

INTRODUCTION

Standards of the IEC 60728 series deal with cable networks including equipment and associated methods of measurement for headend reception, processing and distribution of television signals, sound signals and their associated data signals and for processing, interfacing and transmitting all kinds of signals for interactive services using all applicable transmission media.

This includes

- CATV[1]-networks;
- MATV-networks and SMATV-networks;
- individual receiving networks;

and all kinds of equipment, systems and installations installed in such networks.

The extent of this standardization work is from the antennas and/or special signal source inputs to the headend or other interface points to the network up to the terminal input.

The standardization of any user terminals (i.e., tuners, receivers, decoders, multimedia terminals, etc.) as well as of any coaxial, balanced and optical cables and accessories thereof is excluded.

The reception of television signals inside a building requires an outdoor antenna and a distribution network to convey the signal to the TV receivers.

The installation of an outdoor antenna for each TV receiver should be avoided for several obvious technical, economical and practical reasons.

In a building divided into apartment blocks, the installation of a master antenna television system for terrestrial (MATV) and/or satellite (SMATV) reception, as shown in Figures 1, 2, 3, 4 and 5, describing as an example the various parts of the system is usual. Most of the terms used in the IEC 60728 series can be referred to these figures.

When signals to be conveyed to the TV receivers are picked up far away, for geographical reasons, and the number of users (subscribers) is very high, the installation of a cable network using coaxial cables and/or fibre optic cables is used, as indicated in Figure 4, describing as an example the various parts of the system.

A system model of a cable network is shown in Figure 5, where the main parts of the systems are indicated, as defined in Clause 3.

---

[1] This word encompasses the HFC networks used nowadays to provide telecommunications services, voice, data, audio and video both broadcast and narrowcast.

Copyright International Electrotechnical Commission
Provided by IHS under license with IEC
No reproduction or networking permitted without license from IHS Not for Resale

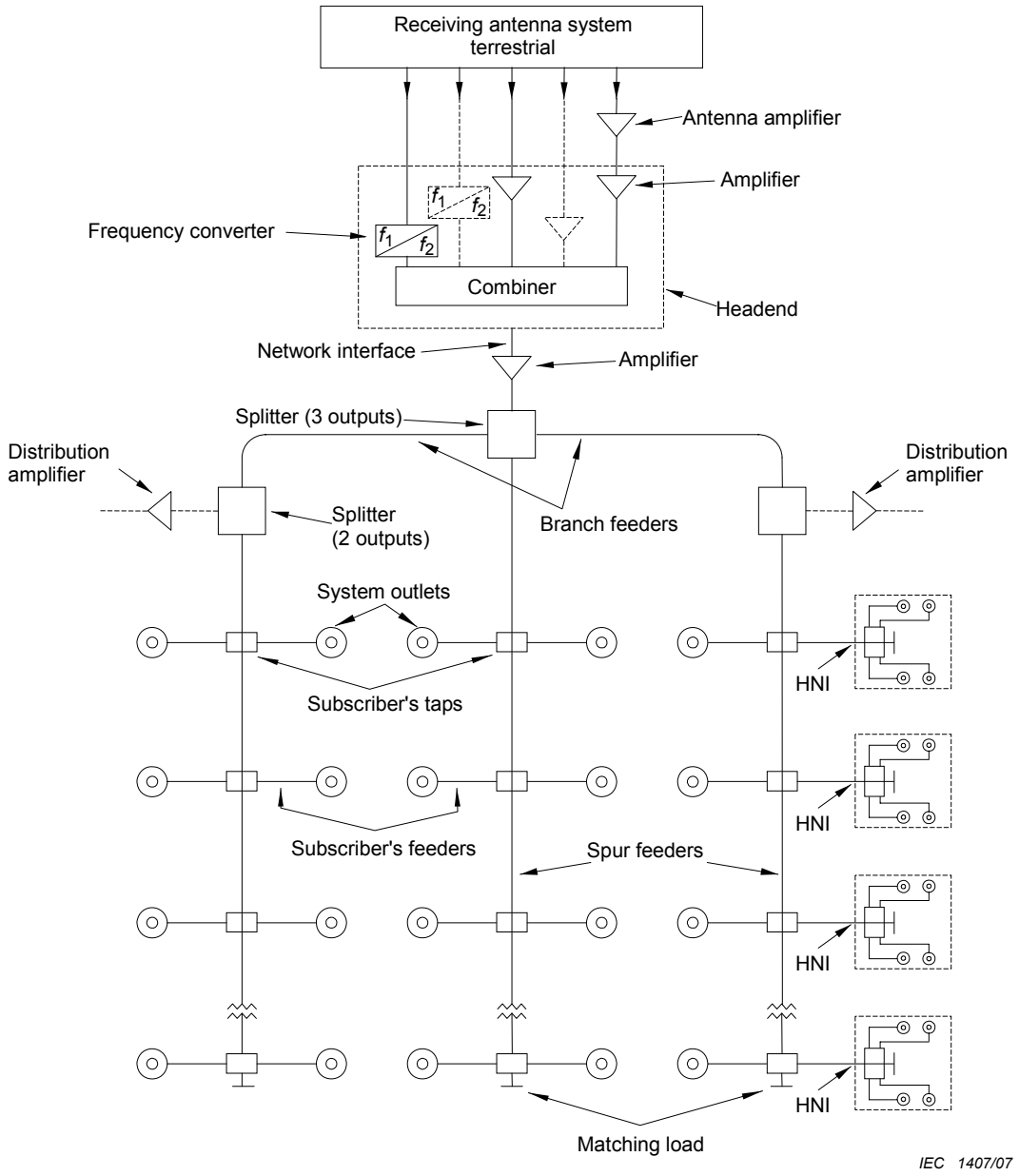

Some apartments (dwelling units) are served with a home network (HN), interfaced to the MATV system by the Home Network Interface (HNI).

Figure 1 – Example of a master antenna television system (MATV) for terrestrial reception

Copyright International Electrotechnical Commission
Provided by IHS under license with IEC
No reproduction or networking permitted without license from IHS Not for Resale

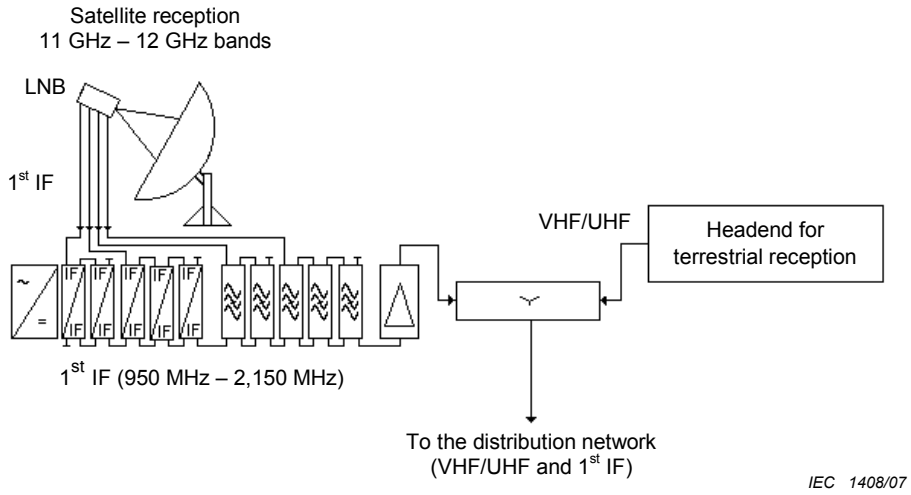

NOTE Distribution at the 1st IF on the same cable as terrestrial VHF/UHF channels.

Figure 2 – Example of the headend of a master antenna television system for satellite (SMATV) reception

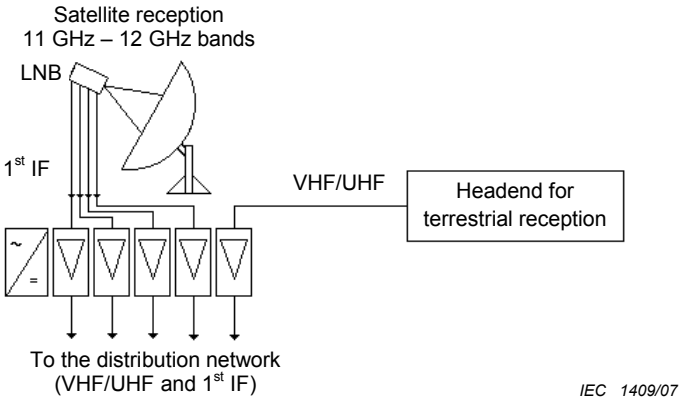

Figure 3a – Headend for terrestrial and satellite reception using multicable distribution

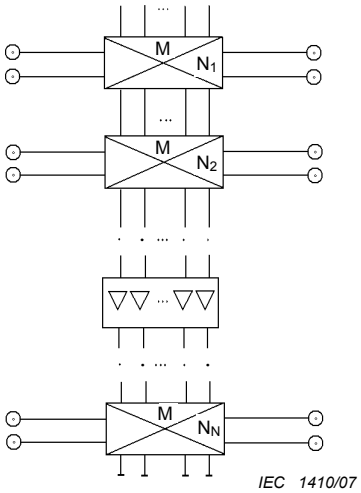

Fifgure 3b – Distribution with switching matrix at each flat

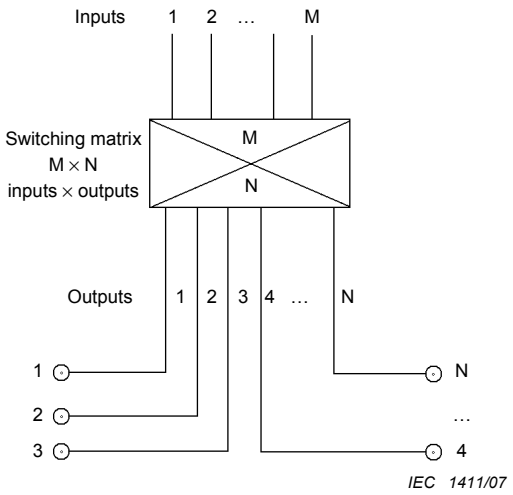

Figure3c – Distribution with switching matrix: star configuration

NOTE Distribution at the 1st IF using multicable and multi-switch technique.

Figure 3 – Example of a master antenna television system for terrestrial and satellite (SMATV) reception

Copyright International Electrotechnical Commission
Provided by IHS under license with IEC
No reproduction or networking permitted without license from IHS Not for Resale

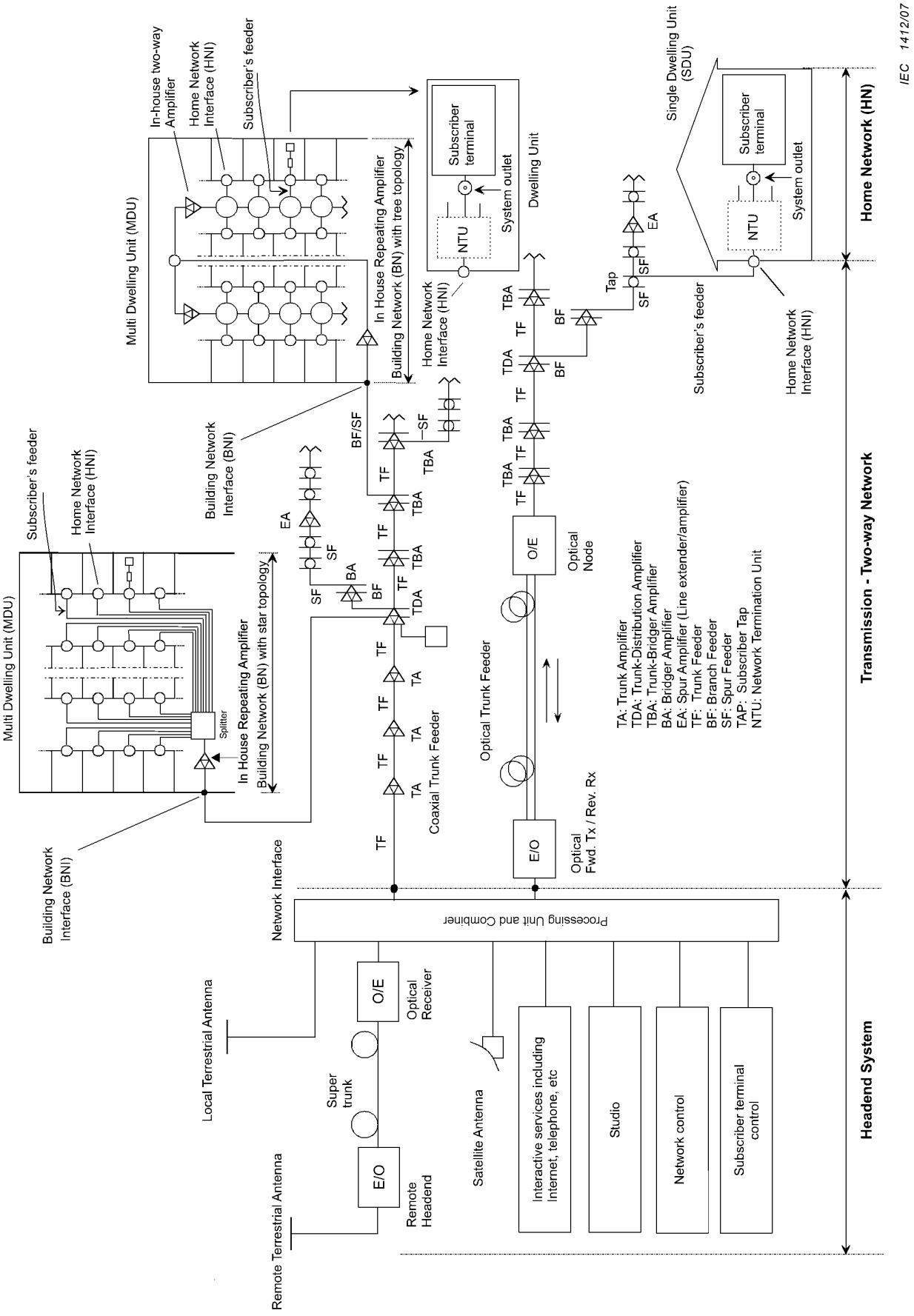

Figure 4 – Example of a cabled distribution system for television and sound signals

Copyright International Electrotechnical Commission
Provided by IHS under license with IEC
No reproduction or networking permitted without license from IHS
Not for Resale

Copyright International Electrotechnical Commission
Provided by IHS under license with IEC
No reproduction or networking permitted without license from IHS
Not for Resale

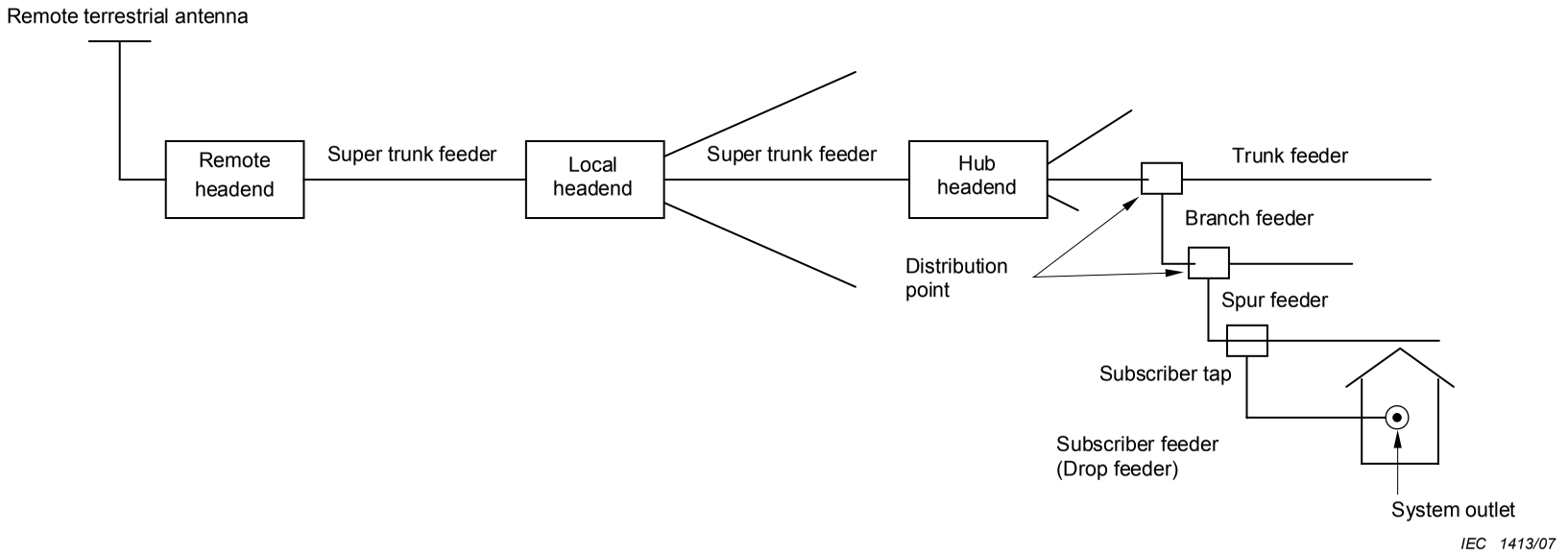

Figure 5 – System model for downstream direction of a cable network for television and sound signals (CATV)

CABLE NETWORKS FOR TELEVISION SIGNALS, SOUND SIGNALS AND INTERACTIVE SERVICES –

Part 1: System performance of forward paths

1 Scope

This part of IEC 60728 is applicable to any cable network (including individual receiving systems) having in the forward path a coaxial cable output and primarily intended for television and sound signals operating between about 30 MHz and 3 000 MHz.

This standard specifies the basic methods of measurement of the operational characteristics of cable network having coaxial cable outputs in order to assess the performance of these systems and their performance limits.

All requirements refer to the performance limits, which shall be obtained between the input(s) to the headend or headends and any system outlet when terminated in a resistance equal to the nominal load impedance of the system, unless otherwise specified. Where system outlets are not used, the above applies at the subscriber's end of the subscriber's feeder. Also the requirements which are obtained between the input(s) to the headend or headends and any home network interface (HNI) are given.

NOTE 1 Methods of measurement described in this standard are considered as basic. However, any equivalent method that ensures at least the same accuracy may be used.

NOTE 2 If the system operator wishes to subdivide the system into a number of parts or wishes to use different transmission media (for example, coaxial cabling, balanced cabling, optical cabling), the accumulation of degradations should not exceed the figures given in this standard.

NOTE 3 System performance requirements of return paths as well as specific methods of measurement for the use of the return paths in cable networks are described in IEC 60728-10.

Clause 5 defines the system performance limits which will, with an unimpaired input, (headend input signal), produce picture and sound signals (at system outlets) where the impairment to any single parameter will be not worse, in normal operating conditions for any analogue channel, than Grade four on the five-grade impairment scale contained in ITU-BT 500-10. For digitally modulated signals, the quality requirement is a quasi-error-free (QEF) reception.

Appropriate performance requirements for the signals at the receiving antennas site are given in Clause 6 in order to provide at the input of the headend of the cable network both analogue and digital television signals with suitable quality.

Clause 7 is applicable to home networks (including those of individual receiving systems) using coaxial cables, balanced cables or optical cables and primarily intended for television signals, sound signals and interactive services, operating between about 30 MHz and 3 000 MHz.

This clause, considering the basic operational characteristics of a home network, specifies the requirements which shall be obtained at the home network interface (HNI) taking into account the performance requirements given at the system outlet or at the terminal input.

Copyright International Electrotechnical Commission
Provided by IHS under license with IEC
No reproduction or networking permitted without license from IHS Not for Resale

2 Normative references

The following referenced documents are indispensable for the application of this document. For dated references, only the edition cited applies. For undated references, the latest edition of the referenced document (including any amendments) applies.

IEC 60050-705, *International Electrotechnical Vocabulary (IEV) – Chapter 705: Radio wave propagation*

IEC 60050-712, *International Electrotechnical Vocabulary (IEV) – Chapter 712: Antennas*

IEC 60050-713, *International Electrotechnical Vocabulary (IEV) – Part 713: Radiocommunications: transmitters, receivers, networks and operation*

IEC 60050-725, *International Electrotechnical Vocabulary (IEV) – Chapter 725: Space radiocommunications*

IEC 60617, *Graphical symbols for diagrams*

IEC 60728-2, *Cabled distribution systems for television and sound signals – Part 2: Electromagnetic compatibility for equipment*

IEC 60728-3, *Cable networks for television signals, sound signals and interactive services – Part 3: Active wideband equipment for coaxial cable networks*

IEC 60728-5, *Cable networks for television signals, sound signals and interactive services – Part 5: Headend equipment*

IEC 60728-10*, Cable networks for television signals, sound signals and interactive services – Part 10: System performance of return paths*

IEC 60728-11, *Cable networks for television signals, sound signals and interactive services – Part 11: Safety*

IEC 60728-12, *Cabled distribution systems for television and sound signals – Part 12: Electromagnetic compatibility of systems*

IEC 60966-2-4, *Radio frequency and coaxial cable assemblies – Part 2-4: Detail specification for cable assemblies for radio and TV receivers – Frequency range 0 to 3 000 MHz, IEC 61169-2 connectors*

IEC 60966-2-5, *Radio frequency and coaxial cable assemblies – Part 2-5: Detail specification for cable assemblies for radio and TV receivers – Frequency range 0 to 1 000 MHz, IEC 61169-2 connectors*

IEC 60966-2-6, *Radio frequency and coaxial cable assemblies – Part 2-6: Detail specification for cable assemblies for radio and TV receivers – Frequency range 0 to 3 000 MHz, IEC 61169-24 connectors*

ISO/IEC 13818-1, *Information technology – Generic coding of moving pictures and associated audio information: Systems*

ISO/IEC 13818-2, *Information technology – Generic coding of moving pictures and associated audio information: Video*

--`,,```,,,,````-`-`,,`,,`,`,,`---
Copyright International Electrotechnical Commission
Provided by IHS under license with IEC
No reproduction or networking permitted without license from IHS Not for Resale

ISO/IEC 13818-3, *Information technology – Generic coding of moving pictures and associated audio information – Part 3: Audio*

ISO/IEC 13818-4, *Information technology – Generic coding of moving pictures and associated audio information – Part 4: Conformance testing*

ISO/IEC 14496-1, *Information technology – Coding of audio-visual objects – Part 1: Systems*

ISO/IEC 14496-2, *Information technology – Coding of audio-visual objects – Part 2: Visua*l

ISO/IEC 14496-3, *Information technology – Coding of audio-visual objects – Part 3: Audio*

ISO/IEC 14496-4, *Information technology – Coding of audio-visual objects – Part 4: Conformance testing*

ITU-R Recommendation BS.412-9, *Planning standards for terrestrial FM sound broadcasting at VHF*

ITU-R Recommendation BT.417-4, *Minimum field strengths for which protection may be sought in planning an analogue terrestrial television service*

ITU-R Recommendation BT.470-7, *Conventional analogue television systems*

ITU-R Recommendation BT.500-11, *Methodology for the subjective assessment of the quality of television pictures*

ITU-T Recommendation J.61, *Transmission performance of television circuits designed for use in international connections*

ITU-T Recommendation J.63, *Insertion of test signals in the field-blanking interval of monochrome and colour television signals*

EN 50117-2-4, Coaxial cables – Part 2-4: *Sectional specification for cables used in cabled distribution networks - Indoor drop cables for systems operating at 5 MHz - 3 000 MHz*

EN 50248, *Characteristics of DAB receivers*

ETSI EN 300 421, *Digital Video Broadcasting (DVB) – Framing structure, channel coding and modulation for 11/12 GHz satellite services*

ETSI EN 300 429, *Digital Video Broadcasting (DVB) – Framing structure, channel coding and modulation for cable systems*

ETSI EN 300 468, *Digital Video Broadcasting (DVB) – Specification for Service Information (SI) in DVB systems*

ETSI EN 300 473, *Digital Video Broadcasting (DVB) – Satellite Master Antenna Television (SMATV) distribution systems*

ETSI EN 300 744, *Digital Video Broadcasting (DVB) – Framing structure, channel coding and modulation for digital terrestrial television*

ETSI EN 300 748, *Digital Video Broadcasting (DVB) – Multipoint Video Distribution Systems (MVDS) at 10 GHz and above*

Copyright International Electrotechnical Commission
Provided by IHS under license with IEC
No reproduction or networking permitted without license from IHS Not for Resale

ETSI EN 300 749, *Digital Video Broadcasting (DVB) – Microwave Multipoint Distribution Systems (MMDS) below 10 GHz*

ETSI EN 302 307 *Digital Video Broadcasting (DVB) – Second generation framing structure, channel coding and modulation systems for Broadcasting, Interactive Services, News Gathering and other broadband satellite applications*

ETSI TR 101 211, *Digital Video Broadcasting (DVB) – Guidelines on implementation and usage of Service Information (SI)*

ETSI ETS 300 784, *Satellite Earth Stations and Systems (SES) – TeleVision Receive-Only (TVRO) satellite earth stations operating in the 11/12 GHz frequency bands*

ETSI TR 101 290, *Digital Video Broadcasting (DVB) – Measurement guidelines for DVB systems*

3 Terms, definitions, symbols and abbreviations

3.1 Terms and definitions

For the purpose of this standard, the terms and definitions given in IEC 60050-705, IEC 60050-712 and IEC 60050-725, apply.

NOTE The most important definitions are repeated below.

3.1.1
active antenna
antenna incorporating active devices

[IEV 712-03-29].

3.1.2
active home network
home network that uses active equipment (for example, amplifiers) in addition to passive equipment like splitters, taps, system outlets, cables and connectors up to the coaxial RF interface (input and/or output) of the terminal equipment for distributing and combining RF signals

3.1.3
antenna
that part of a radio transmitting or receiving system which is designed to provide the required coupling between a transmitter or a receiver and the medium in which the radio wave propagates

[IEV 712-01-01]

NOTE 1 In practice, the terminals of the antenna or the points to be considered as the interface between the antenna and the transmitter or receiver should be specified.

NOTE 2 If the transmitter or receiver is connected to its antenna by a feeder line, the antenna may be considered to be a transducer between the guided radio waves of the feeder line and the radiated waves in space.

3.1.4
antenna amplifier
amplifier (often a low-noise type) associated with an antenna

3.1.5
attenuation
ratio of the input power to the output power of an equipment or system, expressed in decibels

Copyright International Electrotechnical Commission
Provided by IHS under license with IEC
No reproduction or networking permitted without license from IHS Not for Resale

3.1.6
automatic gain control (AGC)
automatic control of a device to maintain constant the level of the signal at its output, using that signal as the control stimulus

3.1.7
automatic level controlled amplifier
amplifier which includes means to control automatically the level of the signal(s) at its output

NOTE This may be achieved by controlling the variation of gain or slope or both, by means of

- one or more pilot carriers,
- a temperature sensing device,
- remote control.

3.1.8
backoff
nominal difference of the lower level to a higher reference level

3.1.9
bit error ratio (*BER*)
ratio between erroneous bits and the total number of transmitted bits

3.1.10
branch amplifier
amplifier to compensate for the attenuation in a branch feeder

3.1.11
branch feeder
feeder used for connecting a distribution point to spur feeders

3.1.12
bridger amplifier
a) amplifier for connection in a trunk feeder to energize a distribution point
b) amplifier for connection in a branch feeder, to energize one or more branch or spur feeders

3.1.13
broadcast and communication technologies (BCT)
group of applications including RF distribution of sound signals and video signals

NOTE In the light of this standard, this is a group of applications using the HF band (3 MHz to 30 MHz), the VHF band (30 MHz to 300 MHz) and the UHF band (300 MHz to 3000 MHz) for transmission of television signals, sound signals and interactive services, as well as for in-home inter-networking.

3.1.14
building network (BN)
network for transmission of television signal, sound signals and interactive services inside a building (multi-dwellings)

3.1.15
building network interface (BNI)
interface to the network for the transmission of television signal, sound signals and interactive services inside a building (multi-dwellings)

NOTE This point is also called “transfer point” or “external network interface”.

--`,,```,,,,````-`-`,,`,,`,`,,`---

Copyright International Electrotechnical Commission
Provided by IHS under license with IEC
No reproduction or networking permitted without license from IHS Not for Resale

3.1.16
carrier-to-intermodulation ratio (*C/I*)
difference in decibels between the carrier level at a specified point in a piece of equipment or a system and the level of a specified intermodulation product or combination of products

3.1.17
carrier-to-noise ratio (*C/N*)
difference in decibels between the vision or sound carrier level at a given point in a piece of equipment or a system and the noise level at that point (measured within a bandwidth appropriate to the television or radio system in use)

3.1.18
combiner
device in which signals arriving at two or more input ports are fed to a single output port

NOTE Some forms of this device may be used in the reverse direction as splitters.

3.1.19
composite intermodulation noise (*CIN*)
sum of noise and intermodulation products due to digitally modulated signals

3.1.20
composite intermodulation noise ratio (*CINR*)
difference in decibels between the signal level and the composite intermodulation noise *(CIN)* level

3.1.21
cross-modulation
undesired modulation of the carrier of a desired signal by the modulation of another signal as a result of equipment or system non-linearities

3.1.22
crossview
effect on a wanted television signal of the undesired transfer of one or more television signal(s) from other circuit(s)

3.1.23
decibel ratio
ten times the logarithm to the base 10 of the ratio of two quantities of power P_1 and P_2, i.e.

$$10 \lg \frac{P_1}{P_2} \quad \text{in dB}$$

NOTE May also be expressed in terms of voltages.

$$20 \lg \frac{U_1}{U_2} \quad \text{in dB}$$

3.1.24
designed receiving antenna
antenna that has the gain, the directivity and the polarization for receiving the wanted signal at the headend site with the required performance

3.1.25
directional coupler
passive signal splitting device, with minimum signal loss between the input port and the output port (through loss), a specified coupling loss between the input port and the tap port (tap loss), and very high loss between the output port and tap port (isolation)

Copyright International Electrotechnical Commission
Provided by IHS under license with IEC
No reproduction or networking permitted without license from IHS Not for Resale

[IEV 723-09-25, mod.]

3.1.26
directivity
attenuation between output port and interface or tap port minus the attenuation between input port and interface or tap port, of any equipment or system

3.1.27
distribution amplifier
amplifier designed to feed one or more branch or spur feeders

NOTE This is a general term embracing branch amplifier and spur amplifier.

3.1.28
distribution point
point where signals are taken from the trunk feeder to energize branch and/or spur feeders

NOTE In some cases, a distribution point may be directly connected to the headend.

3.1.29
DOCSIS/Euro-DOCSIS
standards defining interface specifications for cable modems and cable modem termination systems for high-speed data communication over RF cable networks

3.1.30
dwelling unit (DU)
home or office where television and sound signals are distributed and where is access to interactive services

3.1.31
E_b/N_o
ratio between the energy per bit (E_b) and the noise power density (N_0)

3.1.32
echo rating (E)
result of a system test with a 2*T* sine-squared pulse (as determined in ITU-T Recommendation J.61 and ITU-T Recommendation J.63) using the boundary line on a specified graticule (for example, Figure 29) within which all parts of the received pulse fall

NOTE The object of the graticule design is to ensure that the subjective effect of an echo of rating *E* % is the same as that of a single echo, with displacement greater than 12*T*, of (*E*/2) % relative to the peak amplitude of the test pulse.

3.1.33
equaliser
device designed to compensate, over a certain frequency range, for the amplitude/ frequency distortion or the phase/frequency distortion introduced by feeders or equipment

NOTE This device is for the compensation of linear distortions only.

3.1.34
FECFRAME
frame processed by the FEC coding subsystem

3.1.35
feeder
transmission path forming part of a cable network. Such a path may consist of a metallic cable, optical fibre, waveguide, or any combination of them

--`,,```,,,,````-`-`,,`,,`,`,,`---

Copyright International Electrotechnical Commission
Provided by IHS under license with IEC
No reproduction or networking permitted without license from IHS Not for Resale

NOTE By extension, the term is also applied to paths containing one or more radio links.

3.1.36
frequency amplitude response
gain or loss between two ports of an equipment or system plotted against frequency

3.1.37
frequency converter
device for changing the carrier frequency of one or more signals

3.1.38
frequency designations
frequency designations and abbreviations of IEC 60050-713 to be used in relation to cable networks (for example, a VHF system includes frequencies between 30 MHz and 300 MHz)

3.1.39
gain
ratio of the output power to the input power of any equipment or system, expressed in decibels

3.1.40
headend
equipment which is connected between receiving antennas or other signal sources and the remainder of the cable networks, to process the signals to be distributed

NOTE The headend may, for example, comprise antenna amplifiers, frequency converters, combiners, separators and generators.

3.1.41
headend for individual reception
headend supplying an individual household. This type of installation may include one or more system outlets.

3.1.42
headend input
interface of the headend where the signals received by antennas or individual feeder lines are applied for signal processing

3.1.43
home cable link (HCL)
physical link (cable) between the home distributor (HD) and the system outlet or the terminal input

3.1.44
home distributor (HD)
distributor within a home where cables terminate

3.1.45
home network (HN)
RF cable network inside a single dwelling (one-family house or one unit of a multi-dwelling building) in the SOHO (Small Offices Home Offices) environments or in the rooms of hotels, hospitals, etc.; the preferred topology of this network is a star. This network carries television signals, sound signals and interactive services up to the coaxial RF interface (input and/or output) of the terminal equipment. It may comprise active equipment, passive equipment, cables and connectors

--`,,```,,,,````-`-`,,`,,`,`,,`---
Copyright International Electrotechnical Commission
Provided by IHS under license with IEC
No reproduction or networking permitted without license from IHS Not for Resale

3.1.46
home network interface (HNI)
interface for access to the network for transmission of television signal, sound signals and interactive services inside a home (single dwelling)

3.1.47
hub headend
headend used to feed the entire operating network in the service area

3.1.48
intermodulation
process whereby non-linearity of equipment in a system produces output signals (called intermodulation products) at frequencies which are linear combinations of those of the input signals

3.1.49
isolation
attenuation between two output, tap or interface ports of any equipment or system

3.1.50
level
decibel ratio of any power P_1 to the standard reference power P_0, i.e.

$$10 \lg \frac{P_1}{P_0} \quad \text{in dB}$$

decibel ratio of any voltage U_1 to the standard reference voltage U_0, i.e.

$$20 \lg \frac{U_1}{U_0} \quad \text{in dB}$$

NOTE This may be expressed in decibels (relative to 1 μV in 75 Ω) or more simply in dB(μV) if there is no risk of ambiguity.

3.1.51
local headend
headend which is connected direct to the system trunk feeders or to a short-haul trunk feeder replacement link

3.1.52
looped system outlet
device through which the spur feeder passes and to which is connected a receiver lead, without the use of a subscriber feeder

NOTE For special conditions In Norway, see J.1.

3.1.53
MATV headend
headend used in blocks of flats and in built-up sites to feed TV channels and FM radio channels into the house network or the spur network

3.1.54
modulation error ratio (MER)
sum of the squares of the magnitudes of the ideal symbol vectors is divided by the sum of the squares of the magnitudes of the symbol error vectors of a sequence of symbols, the result being expressed as a power ratio in dB

Copyright International Electrotechnical Commission
Provided by IHS under license with IEC
No reproduction or networking permitted without license from IHS Not for Resale

$$MER = 10 \lg \left\{ \frac{\sum_{j=1}^{N} \left(I_j^2 + Q_j^2 \right)}{\sum_{j=1}^{N} \left(\delta I_j^2 + \delta Q_j^2 \right)} \right\} \text{ in dB}$$

3.1.55
MPEG-2
refers to the ISO/IEC 13818 series (for system coding, see ISO/IEC 13818-1; for video coding, see ISO/IEC 13818-2; for audio coding, see ISO/IEC 13818-3)

3.1.56
MPEG-4
refers to the ISO/IEC 14496 series (for system coding, see ISO/IEC 14496-1; for video coding, see ISO/IEC 14496-2; for audio coding, see ISO/IEC 14496-3)

3.1.57
multi dwelling unit (MDU)
building with many homes or offices used by single owners where television signals, sound signals are distributed and where is access to interactive services

3.1.58
multiplex
signals from several separate sources assembled into a single composite signal for transmission over a common transmission channel

[IEV 701-03-10]

3.1.59
mutual isolation
attenuation between two specified system outlets at any frequency within the range of the system under investigation which is always specified, for any particular installation, as the minimum value obtained within specified frequency limits

3.1.60
network interface (NI)
interface to the network for transmission of television signal, sound signals and interactive services

3.1.61
network termination unit (NTU)
equipment for access to the cable network for television signal, sound signals and interactive services

3.1.62
outdoor unit
part of the TVRO installed in a position within line of sight to the satellite(s) to be received which normally comprises two main parts:

a) the antenna sub-system which converts the incident radiation field into a guided wave; The antenna sub-system consists of
   – the main reflector, the secondary reflectors (if any) and the radiator,
   – the feeder network, which may include optional polarizing devices, to receive orthogonal linear polarizations, in a simultaneous or exclusive way.

   Instead of reflector(s)/feed network subsystem, other types of antennas may be used, for example, flat array antennas

Copyright International Electrotechnical Commission
Provided by IHS under license with IEC
No reproduction or networking permitted without license from IHS Not for Resale

b) the LNB(s), which may include an optional filter, is a device with very low internal noise that amplifies the received signals in the RF band and converts them to intermediate frequencies, (often called the 1st IF), for transmission to one or more indoor units where tuning, demodulation and decoding of the received signals are performed

3.1.63
out-of-band emissions
emissions on a frequency or on frequencies outside the necessary bandwidth which results from the modulation process, but excluding spurious emissions

3.1.64
permanent link
the transmission path between any two test interfaces within a cabling subsystem link including the connecting hardware at each end

3.1.65
phase noise
phase instability of random nature; The sources of random sideband noise in an oscillator are thermal noise, flicker noise and shot noise

Each time the signal is frequency processed this signal is degraded by an addition of phase noise due to phase noise of the local oscillator. Frequency converters or modulators generate phase noise

3.1.66
programme-specific information (PSI)
coding specification describing the contents of the transport stream packets for the purpose of the demultiplexing and presentation of programmes, as defined in ISO/IEC 13818-1

3.1.67
receiver lead
lead which connects the system outlet to the subscriber's equipment

NOTE A receiver lead may include filters and balun transformers in addition to the cable.

3.1.68
remote headend
headend from which signals are delivered to a local headend via a long-distance terrestrial link

3.1.69
satellite master antenna television system (SMATV)
system which is designed to provide sound and television signals to the outlets of a building or a group of buildings. Two system configurations are defined in ETSI EN 300 473 as follows:

- SMATV system A, based on transparent transmodulation of QPSK satellite signals into QAM signals to be distributed to the user;
- SMATV system B, based on direct distribution of QPSK signals to the user, with two options:
  - SMATV-IF distribution in the satellite IF band (above 950 MHz);
  - SMATV-S distribution in the VHF/UHF band, for example in the extended S band (230 … 470 MHz)

3.1.70
separator
device in which the signal energy, covering a frequency band, at one input port is divided between two or more output ports each of which covers a part of that frequency band

NOTE 1 For example, a diplexer is a two-output separator.

Copyright International Electrotechnical Commission
Provided by IHS under license with IEC
No reproduction or networking permitted without license from IHS Not for Resale

NOTE 2 Some forms of this device may be used in the reverse direction for combining.

3.1.71
service information (SI)
digital data describing the delivery system, content and scheduling/timing of broadcast data streams, etc. It includes MPEG-2 programme-specific information (PSI) together with independently defined extensions

3.1.72
$S_{D,RF}/N$
signal-to-noise ratio for a digitally modulated signal in the RF band

3.1.73
single dwelling unit (SDU)
home or office used by a single owner where television signals, sound signals are distributed and there is access to interactive services

3.1.74
signal adaptor
device which modifies the input signal to achieve conformity with the appropriate ITU system, without changing the baseband characteristics, for use in a cable network which distributes television signals not conforming to any ITU system (only in respect of RF structure)

3.1.75
signal tilt
difference in level deliberately established between specified signals at any point in a system If groups of signals are established at differing levels, this is referred to as block tilt

3.1.76
shoulder attenuation
ratio between signal and spectrum re-growth outside channel

3.1.77
slope
difference in gain or attenuation at two specified frequencies between any two points in a system

3.1.78
SMATV headend
headend in block of flats or in built-up sites to feed TV channels received by satellite into the house network or the spur network

NOTE In some cases, a distribution point may be connected directly to the headend.

3.1.79
splitter (spur unit)
device in which the signal power at the (input) port is divided equally or unequally between two or more (output) ports

NOTE Some forms of this device may be used in the reverse direction for combining signal energy.

3.1.80
spur amplifier (line extender)
amplifier to compensate for the attenuation in a spur feeder

3.1.81
spur feeder
feeder to which splitters, subscriber taps, or looped system outlets are connected

Copyright International Electrotechnical Commission
Provided by IHS under license with IEC
No reproduction or networking permitted without license from IHS Not for Resale

3.1.82
spurious emissions
emissions on a frequency or frequencies which are outside the necessary bandwidth and the level of which may be reduced without affecting the corresponding transmission of information. Spurious emissions include harmonic emissions, parasitic emissions, inter-modulation products and frequency conversion products but exclude out of band emissions

3.1.83
standard reference power (P_0)
in cable networks, the standard reference power P_0 is 1/75 pW

NOTE This is the power dissipated in a 75 Ω resistor with a voltage drop of 1 μV_{RMS} across it.

3.1.84
subscriber feeder
feeder connecting a subscriber tap to a system outlet or, where the latter is not used, directly to the subscriber equipment

NOTE A subscriber feeder may include filters and balun transformers.

3.1.85
subscriber equipment
equipment at the subscriber premises such as receivers, tuners, decoders, video recorders

3.1.86
subscriber tap
device for connecting a subscriber feeder to a spur feeder

3.1.87
subscriber terminal (ST)
equipment (television receiver, radio receiver, set-top box, etc.) able to receive the distributed signals or to send (via a cable modem) return signals for interactive services

3.1.88
supertrunk feeder
connects only between headends or between a headend and the first distribution point

3.1.89
symbol rate stability
short-term variation of symbol rate due to signal processing

NOTE For instance, caused by zero packet stuffing in headend equipment

3.1.90
system outlet
device for interconnecting a subscriber feeder and a receiver lead

3.1.91
transport stream (TS)
data structure defined in ISO/IEC 13818-1 It is the basis of the digital video broadcasting (DVB) related standards

3.1.92
trunk feeder
feeder used for the transmission of signals between a headend and a distribution point or between distribution points

Copyright International Electrotechnical Commission
Provided by IHS under license with IEC
No reproduction or networking permitted without license from IHS Not for Resale

3.1.93
trunk amplifier
amplifier to compensate for the attenuation in a trunk feeder

3.1.94
trunk-bridger amplifier
amplifier to compensate for the attenuation in a trunk feeder and also to energize a distribution point

3.1.95
unwanted emissions
consist of spurious emissions and out-of-band emissions

3.1.96
well-matched
matching condition when the return loss of the equipment complies with the requirements of Table 1 of IEC 60728-3

3.2 Symbols

The following graphical symbols are used in the figures of this standard. These symbols are either listed in IEC 60617 or based on symbols defined in IEC 60617.

Symbols	Terms	Symbols	Terms
	attenuator [IEC 60617-S01244(2001:07)]		variable attenuator [IEC 60617-S01245(2001:07)]
	sine-wave generator [IEC 60617-S01226(2001:07)]		low pass filter [IEC 60617-S01248(2001:07)]
	band pass filter [IEC 60617-S01249(2001:07)]		Variable band-pass filter [IEC 60617-S01249(2001:07)] [IEC 60617-S00081(2001:07)]
	amplifier [IEC 60617-S01239(2001:07)]		detector
	oscilloscope [IEC 60617-S00059(2001:07)] [IEC 60617-S00922(2001:07)]		spectrum analyser [IEC 60617-S00059(2001:07)] [IEC 60617-S00910(2001:07)]
	directional coupler [IEC 60617-S01340(2001:07)]		mixer
	modulator [IEC 60617-S01278(2001:07)]		demodulator [IEC 60617-S01278(2001:07)]
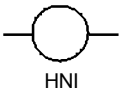	Home Network Interface (HNI)		System Outlet (SO) [IEC 60617-S00438(2001:07)]
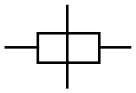	subscriber tap	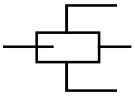	splitter
	Receiver lead	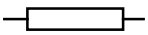	resistor [IEC 60617-S00555(2007:01)]
	RF-choke [IEC 60617-S00583(2001:07)]		

Copyright International Electrotechnical Commission
Provided by IHS under license with IEC
No reproduction or networking permitted without license from IHS Not for Resale

3.3 Abbreviations

AC	alternating current	**AFC**	automatic frequency control
AGC	automatic gain control	**AI**	amplitude imbalance
ALC	automatic level control	**AM**	amplitude modulation
ANT_C	antenna coefficient	**APSK**	amplitude and phase shift keying
ASCII	American standard code for information interchange	**ATM**	asynchronous transfer mode
AWGN	additive white Gaussian noise	**BAT**	bouquet association table
BCH	Bose-Chaudhuri-Hocquenghem multiple error correction binary block code	**BCT**	broadcast and communication technologies
BCT B	BCT supported by balanced cabling	**BCT C**	BCT supported by coaxial cabling
BEP	bit error probability	**BER**	bit error ratio
BPSK	binary phase shift keying	**bslbf**	bit string, left bit first
BW	bandwidth	**C/N**	carrier-to-noise ratio (ratio of RF or IF power to noise power)
CA	conditional access	**CATV**	community antenna television
CENELEC	Comité Européen de Normalisation Electrotechnique	**CEPT**	Conférence Européenne des Administrations des Postes et des Télécommunications
COFDM	coded orthogonal frequency division multiplex	**CPE**	common phase error
CRC	cyclic redundancy check	**CS**	carrier suppression
CSO	composite second order	**CTB**	composite triple beat
CW	continuous wave	**D/A**	digital-to-analogue converter
DAB	digital audio broadcasting	**DC**	direct current
DFT	discrete Fourier transformation	**DOCSIS**	Data Over Cable Service Interface Specification
DTH	direct to home	**DVB**	digital video broadcasting
DVB-C	digital video broadcasting baseline system for digital cable television (ETSI EN 300 429)	**DVB-CS**	digital video broadcasting baseline system for SMATV distribution systems (ETSI EN 300 473)
DVB-MC	digital video broadcasting baseline system for multi-point video distribution systems below 10 GHz (ETSI EN 300 749)	**DVB-MS**	digital video broadcasting baseline system for multi-point video distribution systems at 10 GHz and above (ETSI EN 300 748)
DVB-S	digital video broadcasting baseline system for digital satellite television (ETSI EN 300 421)	**DVB-S2**	digital video broadcasting baseline system for digital satellite television second generation (ETSI EN 302 307)
DVB-T	digital video broadcasting baseline system for digital terrestrial television (ETSI EN 300 744)	**EB**	error block

Copyright International Electrotechnical Commission
Provided by IHS under license with IEC
No reproduction or networking permitted without license from IHS Not for Resale

EIT	event information table	**EMM**	entitlement management message
EN	European norm	**ENB**	equivalent noise bandwidth
END	equivalent noise degradation	**ETR**	ETSI technical report
ETS	European telecommunication standard	**ETSI**	European Telecommunications Standards Institute
Euro DOCSIS	European Data Over Cable Service Interface Specification	**FDM**	frequency division multiplex
FEC	forward error correction	**FFT**	fast Fourier transform
FIFO	first-in, first-out shift register	**FM**	frequency modulation
FSL	field strength level	**HBES**	home and building electronic systems
HCL	home cable link	**HD**	home distributor
HDTV	high-definition television	**HES**	home electronic systems
HEX	hexadecimal notation	**HN**	home network
HNI	home network interface	**HP**	high priority bit stream
ICI	inter-carrier interference	**IF**	intermediate frequency
IFFT	inverse fast Fourier transform	**IRE**	Institute of Radio Engineers
ITS	insertion test signal	**ITU**	International Telecommunication Union
LDPC	low-density parity check (codes)	**LDTV**	low-definition television
LNB	low noise block converter (frequency converter in the focal point of a parabolic antenna)	**LO**	local oscillator
LP	low-priority bit stream	**LSB**	least significant bit
MATV	master antenna television	**MDU**	multi-dwelling unit
MER	modulation error ratio	**MMDS**	microwave multipoint distribution systems
MPEG	moving picture experts group	**MSB**	most significant bit
MSPS	mega symbols per second	**MUX**	multiplex
MVDS	microwave video distribution systems	**NICAM**	near-instantaneously companded audio multiplex
NM	noise margin	**NTSC**	national television system committee
OCT	octal notation	**OFDM**	orthogonal frequency division multiplex
PAL	phase alternation line	**PCR**	programme clock reference
PER	packet error ratio	**PID**	packet identifier
PRBS	pseudo-random binary sequence	**PSK**	phase shift keying
QAM	quadrature amplitude modulation	**QEF**	quasi-error-free
QPSK	quaternary phase shift keying	**RF**	radio frequency

Copyright International Electrotechnical Commission
Provided by IHS under license with IEC
No reproduction or networking permitted without license from IHS Not for Resale

RMS	root mean square	**RS**	Reed-Solomon
RSBW	resolution bandwidth	**SDTV**	standard definition television
SDU	single dwelling unit	**SECAM**	séquenciel couleur à mémoire
SFN	single frequency network	**SMATV**	satellite master antenna television
SO	system outlet	**SOHO**	small office, home office
SSLA	sectional slope of active coaxial home network	**SSLP**	sectional slope of passive coaxial home network
T-STD	Standard television	**TC8PSK**	trellis coded 8-phase shift keying
TI	terminal input	**TPS**	transmission parameter signalling
TS	transport stream	**TV**	television
TVRO	television receive only	**UHF**	ultra-high frequency
uimsbf	unsigned integer, most significant bit first	**UTC**	universal time coordinated
VHF	very high frequency	**VSB**	vestigial side band

4 Methods of measurement at system outlet

4.1 General

The methods of measurement listed below are applicable to analogue and/or digitally modulated carriers as indicated in Table 1.

--`,,```,,,,````-`-`,,`,,`,`,,`---

Copyright International Electrotechnical Commission
Provided by IHS under license with IEC
No reproduction or networking permitted without license from IHS Not for Resale

Table 1 – Application of the methods of measurement

Methods of measurement	Modulation of carriers									
	Analogue					Digital				
	Television				Radio FM	Television				Radio
	Vision carrier AM-VSB			Vision and sound carriers	TV sound carrier	Vision and sound DVB			Sound	
Subclause reference	NTSC	PAL	SECAM	FM	FM/AM	PSK, APSK	QAM	OFDM	NICAM	DAB
4.2 Mutual isolation between system outlets	x	x	x	x	x	x	x	x	x	x
4.3 Amplitude response within a channel	x	x	x	x	x	x	x	x	x	x
4.4 Chrominance-luminance gain and delay inequalities		x	x							
4.5 Non-linear distortion	x	x	x	x	x		x			
4.6 Carrier-to-noise ratio	x	x	x	x	x					
4.7 Echoes	x	x	x							
4.8 AM-VSB television, FM radio and FM television signal level	x	x	x	x	x					
4.9 Data echo rating and data delay inequality	x	x	x							
4.10 Interference in FM sound radio channels					x					
4.11 Methods of measurement for digitally modulated signals						x	x	x		
4.11.3 Signal level for digitally modulated signals						x	x	x		x
4.11.4 RF signal-to-noise ratio $S_{D,RF}/N$ for digitally modulated signals						x	x	x		x
4.11.5 Bit error ratio (BER)						x	x	x		x
4.11.6 *BER* versus E_b/N_0 or *C/N*						x	x	x		x
4.11.7 Noise margin						x	x	x		x
4.11.8 Modulation error ratio (MER)						x	x			
4.11.9 Phase jitter						x	x			
4.11.10 Phase noise of an RF carrier						x	x	x		x

--`,,```,,,,````-`-`,,`,,`,`,,`---

Copyright International Electrotechnical Commission
Provided by IHS under license with IEC
No reproduction or networking permitted without license from IHS Not for Resale

4.2 Mutual isolation between system outlets

4.2.1 Introduction

Although the method described applies also to the far ends of subscriber feeders when no system outlets are used, isolation will usually be measured between

a) system outlets connected to adjacent subscriber taps,

b) system outlets connected to the same multiple subscriber tap,

c) adjacent looped system outlets.

4.2.2 Equipment required

The test set-up shall be well-matched and shall consist of

a) a sweep frequency generator, with frequency range or ranges to suit the system to be examined, equipped with a frequency marking system,

b) a terminating wideband detector,

NOTE 1 "Wideband" is understood to mean of sufficient bandwidth to cover the full frequency range of the system under investigation.

NOTE 2 Some sweep frequency generators may include a terminating wideband detector.

c) a variable attenuator, adjustable in steps of not more than 1 dB up to a value greater than the maximum mutual isolation to be measured,

d) a wideband amplifier with sufficient gain to raise the signal level at the system outlet to a level suitable to drive the detector,

e) an oscilloscope or other display unit suitable for operation with the sweep frequency generator,

f) a suitable coaxial cable of sufficient length to reach from one system outlet to an adjacent one in the cable network.

4.2.3 Connection of the equipment

The equipment shall be connected as in Figure 6.

--`,,```,,,,````-`-`,,`,,`,`,,`---

Copyright International Electrotechnical Commission
Provided by IHS under license with IEC
No reproduction or networking permitted without license from IHS Not for Resale

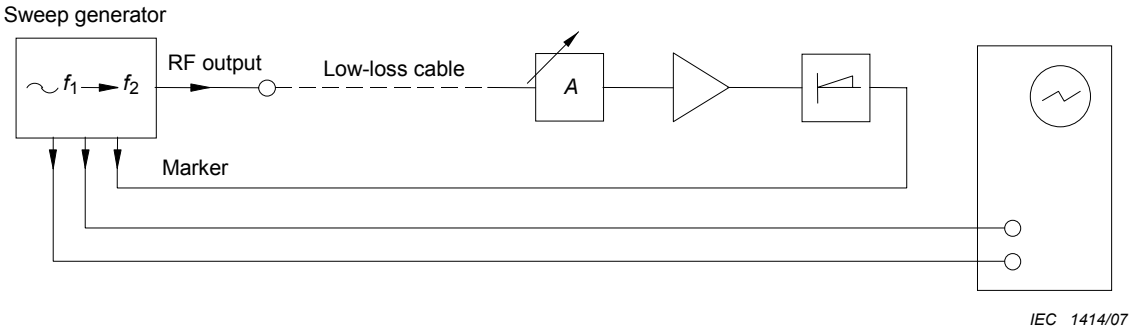

Figure 6a

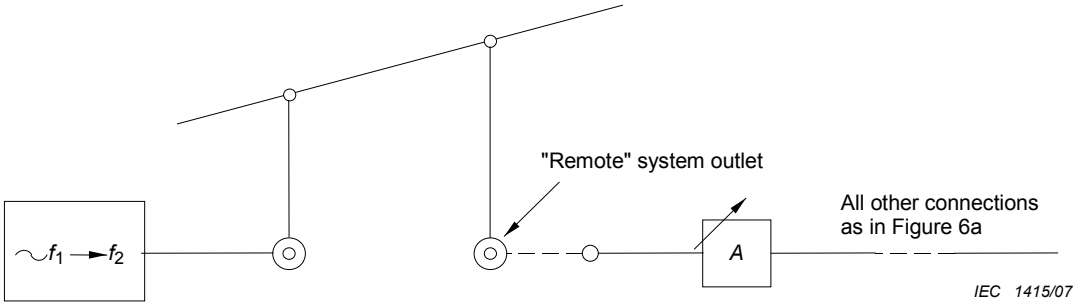

Figure 6b

Figure 6 – Arrangement of test equipment for measurement of mutual isolation between system outlets

4.2.4 Measurement procedure

a) With the equipment connected as shown in Figure 6 a, set the variable attenuator to a value just greater than the maximum value of mutual isolation expected to be measured; Note this value a_1.

b) Adjust the output level of the sweep generator to give a level at the input to the amplifier approximately equal to that available at a system outlet.

c) Adjust the oscilloscope and amplifier gain controls to produce a display and note the amplitude a_1 of the display over the frequency range under inspection.

d) Remove from the section under test, the signals normally distributed on the system whilst maintaining the correct terminating conditions; Connect the equipment as shown in Figure 6b; Note that the output from the sweep generator is connected to the "local" system outlet and the long cable (according to 4.2.2 f)) is used to connect to the "remote" outlet.

e) Reduce the attenuator setting until the peak of the display just reaches the same amplitude as that noted in item c) of this subclause for the frequency at which the peak occurs;

f) Note the new value of the attenuator a_2.

g) Mutual isolation is given by a_1 - a_2.

h) If the system outlets are of dual socket design, for example, TV and Radio, the mutual isolation should also be measured at the appropriate frequencies between one socket, for example TV, of the "local" system outlet and the alternate socket, for example, Radio, of the "remote" system outlet and vice versa. In these cases, it will be necessary also to

Copyright International Electrotechnical Commission
Provided by IHS under license with IEC
No reproduction or networking permitted without license from IHS Not for Resale

measure mutual isolation with the unused sockets in both terminated and open-circuit conditions. The conditions of measurement should be stated when tabulating results. When unused sockets are terminated, the terminating resistance shall be 75 Ω.

i) Where the measurements are made in a number of discrete frequency bands, the lowest result obtained shall be taken as the mutual isolation between the two system outlets under investigation.

4.2.5 Presentation of the results

The results shall be presented in a table listing the values obtained for each couple of measured system outlets.

4.3 Amplitude response within a channel

4.3.1 Introduction

The method described is applicable to the measurement of the amplitude response of cable networks over the frequency range of an individual channel between two specified points within the system.

However, where input signals to the system are received at, or are reduced to, baseband, and modulated onto the system carrier frequencies, the response of any demodulator and modulator shall not be included. If it is required to include the characteristics of these items, a separate assessment shall be made using test techniques applicable to such equipment.

Where the system contains frequency changing equipment between the antenna input and the system outlet at which the tests are to be made, the calibration of the equipment (as detailed in 4.2.4a) to 4.2.4g)) shall be carried out at the output frequencies, having first checked that the output of the sweep frequency generator is also flat over the input channel.

4.3.2 Equipment required

The test set-up shall be well-matched and shall consist of

a) a sweep frequency generator,

b) a terminating RF detector,

c) two variable attenuators,

d) an amplifier,

e) a dual-trace oscilloscope,

f) a high output (at least 300 mV_{RMS} terminated) signal generator of known frequency calibration over the frequency range of the channel to be tested,

g) a balanced mixer,

h) a low-pass filter with cut-off at approximately 200 kHz for television channels or approximately 10 kHz for FM sound radio,

i) a directional coupler suitable for use in the frequency range of the channel to be tested,

j) a termination to match the output of the filter specified in item h) of this subclause.

4.3.3 Connection of the equipment

The equipment shall be connected as in Figure 7a. If the tests are to be carried out in the presence of other signals on the system, a filter may be necessary at the input of the amplifier to prevent distortion of the display. This filter shall have a flat response and shall match the system correctly over the channel to be tested. It shall have sufficient attenuation at the frequencies of the other signals to reduce them to about 20 dB below the level of the swept test signal.

Copyright International Electrotechnical Commission
Provided by IHS under license with IEC
No reproduction or networking permitted without license from IHS Not for Resale

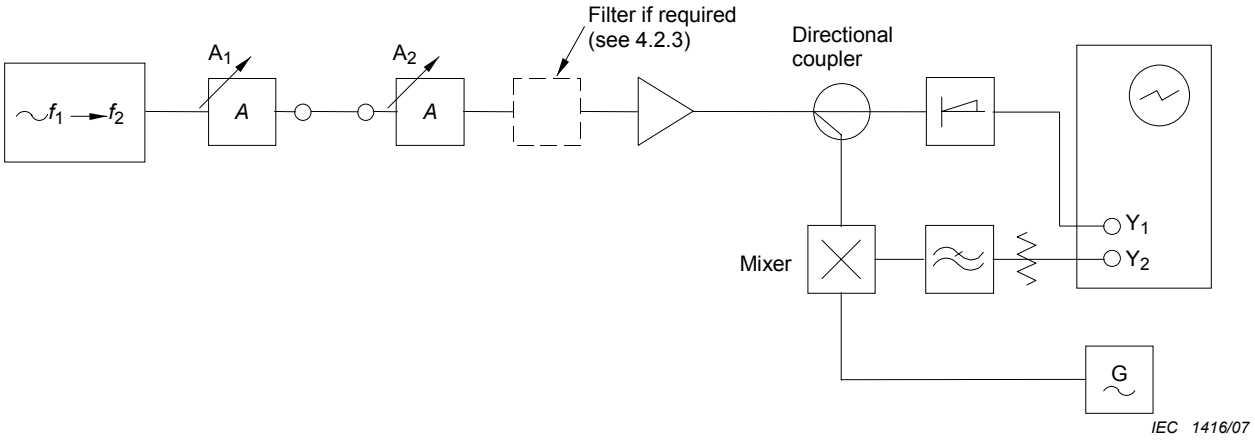

Figure 7a

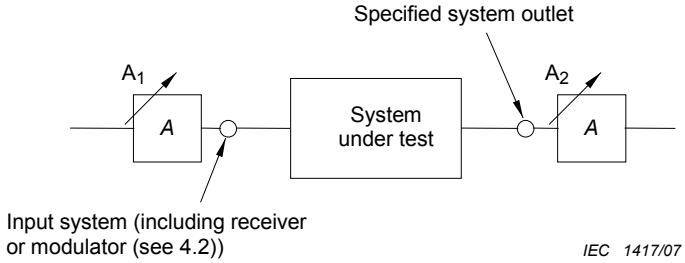

Figure 7b

Figure 7 – Arrangement of test equipment for measurement of frequency response within a channel

4.3.4 Measurement procedure

a) With the equipment connected as shown in Figure 7a, adjust the output frequencies of the sweep generator to cover the channel to be tested and set the variable attenuator A_1, so that the level of the signal at its output is that which will be required when connected to the system input.

b) Set the variable attenuator A_2, so that the level of the signal at the input to the amplifier is about 3 dB to 4 dB below that expected at the system outlet at which the test will be made.

c) Adjust the oscilloscope controls to obtain a satisfactory display on the Y_1 channel, which shall be DC coupled, locking the timebase to the leading edge of the display.

NOTE It may be necessary to operate the oscilloscope at a repetition rate equal to half that of the sweep generator and examine the "second" displayed response.

d) Adjust the frequency of the signal generator to that of the lower limit of the channel under investigation and arrange the level of this signal and the gain and shift controls of the Y_2 channel of the oscilloscope to produce a satisfactory "marker".

e) Move the "marker" to the upper frequency limit of the channel and carefully note the amplitude of the display between the two marks (see "reference" in Figure 8) and the level of the display during the blanking period.

--`,,```,,,,````-`-`,,`,,`,`,,`---
Copyright International Electrotechnical Commission
Provided by IHS under license with IEC
No reproduction or networking permitted without license from IHS Not for Resale

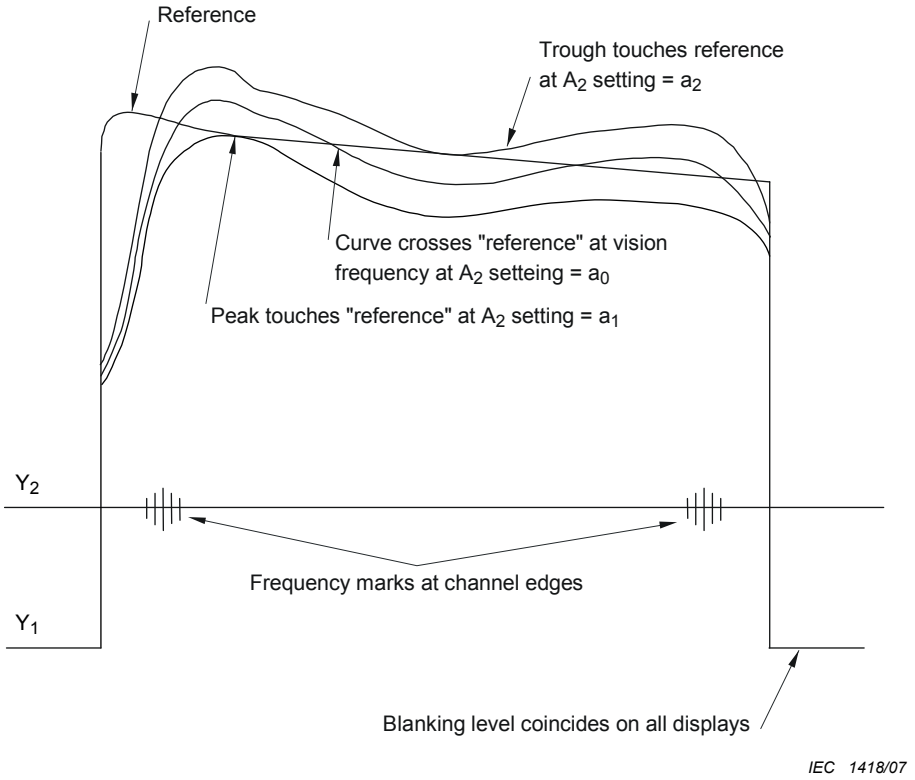

Figure 8 – Interpretation of displays for measurement of frequency response within a channel

f) Adjust the attenuator A_2 to values 3 dB either side of that set as specified in item b) of this subclause and check that the shape of the reference curve does not alter materially.

g) Connect the equipment to the cable network as shown in Figure 7b removing the normal signal input to the channel under test, but retaining any pilot signals which may be necessary to maintain correct operation of the system.

NOTE Signal-operated AGC systems may not function correctly on swept input signals and may have to be rendered inoperative and manual gain control used during these tests.

h) Adjust the attenuator A_2 to produce the same general amplitude of display as obtained in item c) of this subclause, using the "reference" curve and carefully aligning the blanking level with that obtained in item e) of this subclause.

i) Mark the frequency limits of the channel as described in item d) and item e) of this subclause.

j) Using the attenuator A_2, set up the display so that within the frequency limits marked in item i) of this subclause:

1) the curve crosses the "reference" at the vision carrier frequency, interpolating if necessary; note the value a_0, with correction for interpolation;

2) the "peak" of the response touches the "reference", interpolating if necessary; note the value a_1, with correction for interpolation.

The "trough" of the response touches the "reference", interpolating if necessary.

Note the value a_2, with correction for interpolation.

k) The variation of amplitude/frequency response within the channel is given by (a_1–a_0) and (a_2–a_0).

Copyright International Electrotechnical Commission
Provided by IHS under license with IEC
No reproduction or networking permitted without license from IHS Not for Resale

4.3.5 Presentation of the results

The results are presented in a table or by a curve showing the amplitude response within the measured channel.

4.4 Chrominance-luminance gain and delay inequalities

4.4.1 Introduction

The methods described are only relevant for PAL and SECAM standards and applicable to the measurement of chrominance/luminance gain and delay inequalities for complete systems and constituent items of equipment. The test signals employed are in both cases those recommended in ITU-T Recommendation J.61, and are shown in Figure 9 and Figure 10.

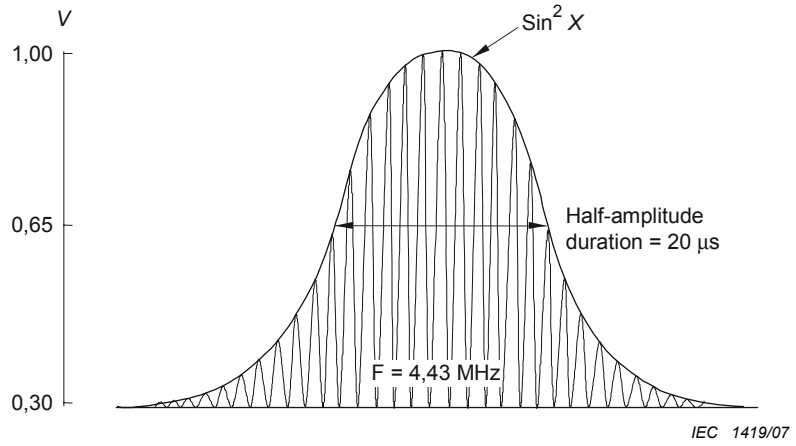

Figure 9 – Test signal (signal *F* for 625-line systems) employed for chrominance/luminance gain and delay inequality

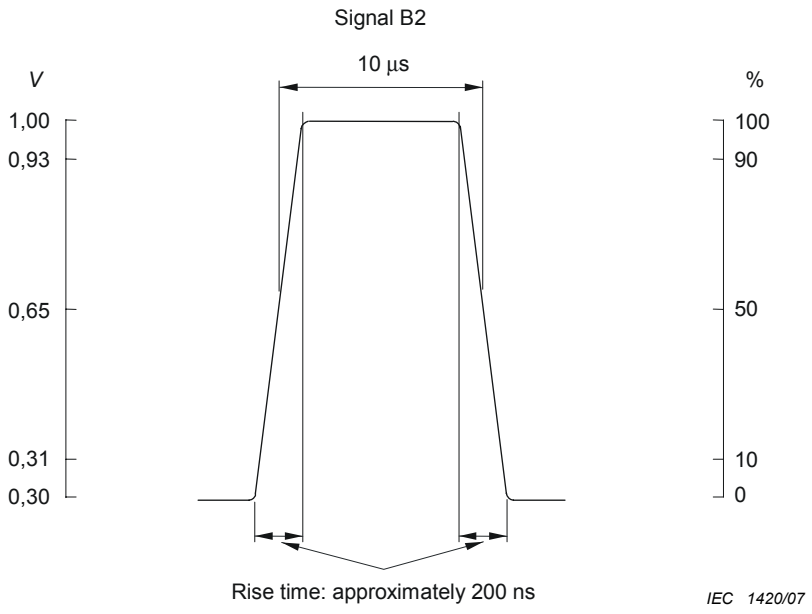

NOTE In France, the nominal rise time B2 is approximately 110 ns.

Figure 10 – Test signal (signal B2 for 625-line systems) employed for chrominance/luminance gain and delay inequality

Copyright International Electrotechnical Commission
Provided by IHS under license with IEC
No reproduction or networking permitted without license from IHS Not for Resale

It is intended that these measurements are carried out with test signals inserted at the system headend. They may be either of the full-frame type or, where convenient, may be inserted in the field blanking periods. The use of inserted test signals available on the broadcast television channel is not generally recommended as these are subject to variations beyond the control of the user. However, where such signals, of known stability and of adequate quality, are available, they may be used to carry out these measurements.

4.4.2 Equipment required

The test set-up shall be well-matched and shall consist of

a) an oscilloscope which will not contribute significant distortion to the signal displayed,

b) a modulator (unless transmitted test signals in the field blanking interval are to be used) having the following characteristics:

   1) radio-frequency characteristics (excluding sound) corresponding to ITU-R Recommendation BT.470, and appropriate to the television transmission system used;

   2) video signal input requirement of 1 V peak-to-peak composite;

   3) a modulated output signal of a convenient amplitude,

c) a synchronous demodulator having characteristics appropriate to the television transmission system used,

d) two attenuators variable in steps of not more than 1 dB,

e) a test signal generator (unless transmitted test signals are used) providing signals having characteristics appropriate to the television transmission system under consideration, as specified in ITU-T Recommendation J.61 and containing composite pulse and bar signal elements B2 and F,

NOTE 1 Most commercially available test signal generators will provide this signal as part of a composite test line.

NOTE 2 For measurement on system I, a composite pulse of half-amplitude duration = 1 µs would be an acceptable alternative to that shown as element F.

f) A test set capable of providing calibrated variable delay and attenuation in either the chrominance or luminance areas of the video spectrum.

4.4.3 Connection of the equipment

The equipment shall be connected as in Figure 11.

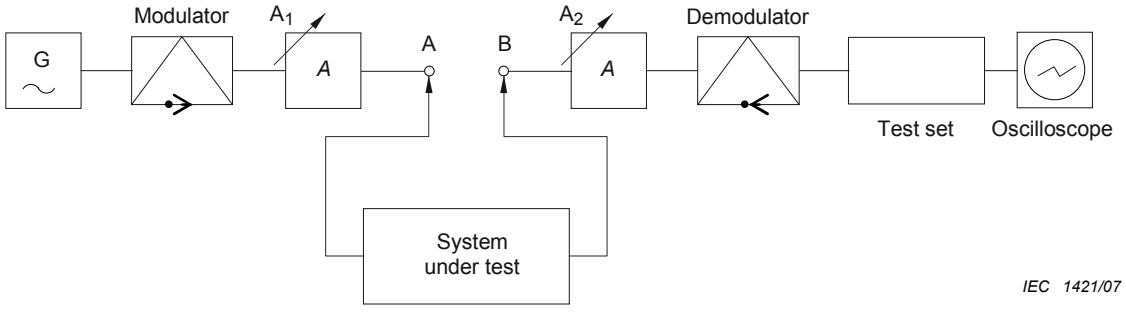

Figure 11 – Arrangement of test equipment for measurement of chrominance/luminance gain and delay inequality

4.4.4 Measurement procedure

a) With point A directly connected to point B (see Figure 11), adjust attenuator A_1 for an output level sufficient to drive the system to be tested and attenuator A_2 to obtain the correct input level to the demodulator.

Copyright International Electrotechnical Commission
Provided by IHS under license with IEC
No reproduction or networking permitted without license from IHS Not for Resale

b) Adjust the oscilloscope Y gain, Y shift and time base to obtain a suitable display of the composite pulse.

For convenience, the oscilloscope may be triggered so that the top of the bar is superimposed over the pulse, as in Figure 12.

Ensure that the distortion of the test signal due to the control loop (test equipment) is small compared with the limit specified for the system or equipment to be tested.

d) Connect the system or equipment to be tested between points A and B.

Adjust the attenuator A_2 to return the input level to the demodulator to that given in item a) of this subclause.

e) Using the oscilloscope controls, obtain a display as in item b) of this subclause.

f) With the controls on the test set, null the delay inequality so that the bottom edge of the pulse is symmetrical about the vertical centreline of the pulse (see Figure 12b and Figure 13b).



Figure 12a – Before nulling delay **Figure 12b – After nulling delay**

Figure 12 – Displayed pulses: chrominance low and lagging

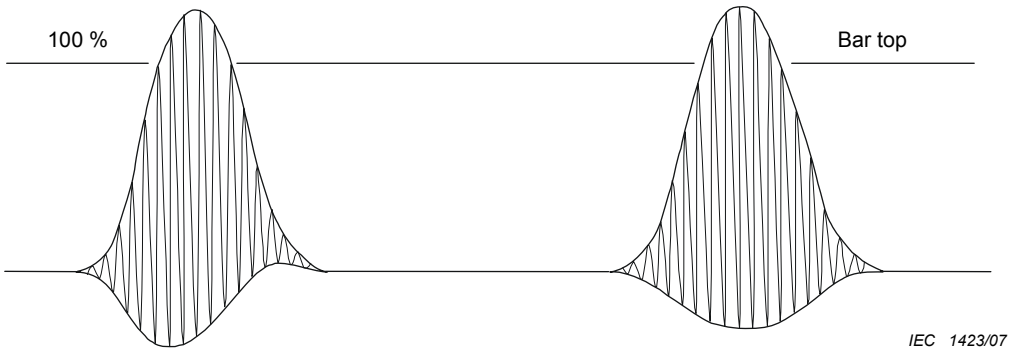

Figure 13a – Before nulling delay **Figure 13b – After nulling delay**

Figure 13 – Displayed pulses: chrominance high and leading

g) Using the calibrated attenuator on the test set, null the gain inequality so that the peak-to-peak amplitude of the chrominance signal equals that of the luminance bar.

h) If necessary, repeat the procedure of 4.4.4e) and 4.4.4f).

i) Read the gain and delay inequalities from the calibrated test set.

NOTE 1 If the measurement is made in the presence of echoes generated by discontinuities in the system under test, the result obtained will be subject to an error of magnitude not exceeding that of the echo.

--`,,```,,,,````-`-`,,`,,`,`,,`---

Copyright International Electrotechnical Commission
Provided by IHS under license with IEC
No reproduction or networking permitted without license from IHS Not for Resale

NOTE 2 It is possible, without the use of the test set, to estimate the delay or gain inequality by direct observation of the pulse against a calibrated graticule and use of a suitable nomograph. The nomograph employed is that applicable to the half-amplitude duration of the particular composite pulse employed for the test. However, where non-linear distortion is present, particularly quadrature distortion in the demodulator, the results will be substantially in error.

4.4.5 Presentation of the results

The results are presented in a table showing the measured value of the chrominance-luminance gain and delay inequalities related to the measured channel.

4.5 Non-linear distortion

4.5.1 General

See IEC 60728-3. The methods described there are applicable to PAL and SECAM systems.

4.5.2 Intermodulation

See IEC 60728-3.

4.5.3 Composite beat

4.5.3.1 General

The method of measurement of composite beat using AM television signals is applicable to the measurement of the ratio of the carrier-to-composite beat at a specified point in a cable network. The method can also be used to determine the composite beat intermodulation performance of individual items of equipment. This measurement is made using the existing channels in the system with their normal modulation.

4.5.3.2 Introduction

When the input signals are at regularly spaced intervals (as is common in most frequency allocations for TV channels), the various distortion products tend to cluster in groups, close to the vision carriers and at other regular positions within the TV channels. The number of different products in each cluster increases rapidly with the number of channels. They combine in different ways, depending on the degree of coherence between the generating signals, and the relative phases of the different distortion products.

The method described in this subclause measures the non-linear distortion of a device or system by the composite effect of all the beats clustered close to the vision carrier or at other positions within a TV channel. During the measurement, that channel has to be turned off. The composite beat measured is that generated by all carriers except that or those of the measured channel.

NOTE On systems carrying more than 10 channels, removal of the wanted channel does not significantly affect the result.

If the major contribution to the composite beat is due to distortion products of a particular order, the composite beat will follow the standard level variation for that order. If the composite beat, as measured, does not follow a standard level variation, it shall have significant contributions from distortion products of different orders.

The method is used to support a specification of the following general format: "the composite beat ratio for (list of carriers) in channel (A) at *B* dB(μV) is *C* dB".

(A) designates the channel in which the test is made. If omitted, the specification is understood to be a minimum specification for measurements at all the channels specified by the list of carriers.

Copyright International Electrotechnical Commission
Provided by IHS under license with IEC
No reproduction or networking permitted without license from IHS Not for Resale

B is the reference level at which all carriers are set during the measurement, unless otherwise specified. If all carriers are not at the same level, the specification should clearly indicate the level of each carrier relative to the reference level, which is that of the highest carrier level.

C is the composite beat ratio, usually given as a minimum specification.

The list of carriers will usually be specified as a list of standard channel designations, signifying test signals at the frequencies of the corresponding vision carriers.

The ratio of carrier-to-composite beat may not vary with output signal level in the way expected for distortion of a given order, and it may therefore be necessary to repeat the tests at levels higher and lower than those initially used. Repeat the tests at levels 2 dB higher and lower. It is recommended that these repeat tests are done on the channel which produced the lowest beat ratio during the test.

4.5.3.3 Equipment required

a) A spectrum analyser with 30 kHz IF bandwidth and 10 Hz video bandwidth capability.

NOTE When using a spectrum analyser with minimum video filtering capabilities greater than 10 Hz, the composite third-order distortion may be noisy and should be read at the middle of the trace.

b) A variable 75 Ω attenuator, adjustable in 1 dB steps.

c) A bandpass filter for each channel to be tested or a tunable bandpass filter; This filter should attenuate the other channels present on the system to be tested sufficiently to ensure that the products generated by non-linearity in the spectrum analyser itself do not contribute significantly to the composite beat products to be measured. The passband of this filter shall at least be flat within 1 dB over the frequency range of interest.

NOTE If the linearity of the spectrum analyser is sufficient and known, this filter is not necessary.

4.5.3.4 Connection of the equipment

The equipment is connected as in Figure 14.

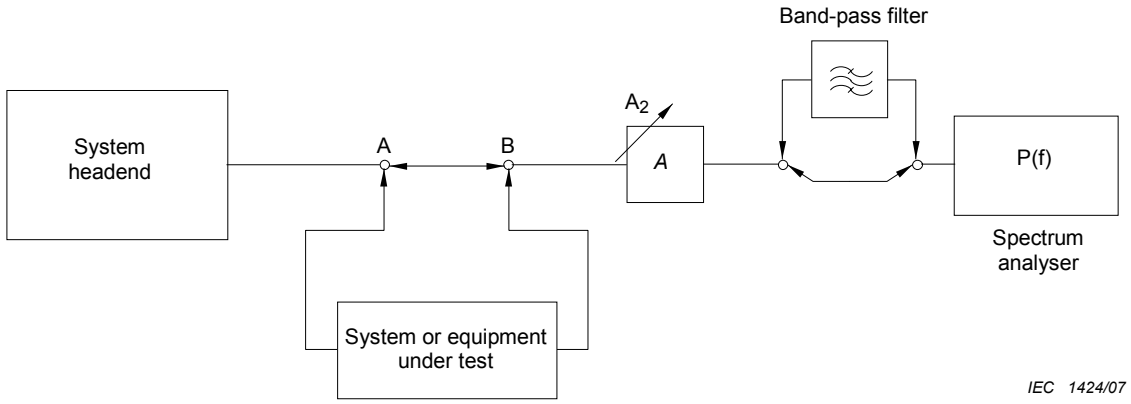

Figure 14 – Connection of test equipment for the measurement of non-linear distortion by composite beat

4.5.3.5 Measurement procedure

a) Connect point A directly to point B and disconnect the band pass filter (see Figure 14).

b) Adjust the spectrum analyser as follows:

IF bandwidth: 30 kHz

Video bandwidth: 10 Hz

--`,,```,,,,````-`-`,,`,,`,`,,`---

Copyright International Electrotechnical Commission
Provided by IHS under license with IEC
No reproduction or networking permitted without license from IHS Not for Resale

Scan width: 50 kHz/div.

Vertical scale: 10 dB/div.

Scan-time: 0,2 s/div.

c) Tune the spectrum analyser to the channel in which the measurement is to be made so as to display the vision carrier in a frequency range of 0,5 MHz towards the sound carrier.

d) Adjust the sensitivity of the spectrum analyser together with its internal and external input attenuator in such a way that the response to the vision carrier corresponds to a full-scale reference; At the same time, the noise level shall be at least 60 dB and preferably 65 dB below the reference level.

e) Insert the band pass filter (if necessary) corresponding to the channel to be measured and adjust the input attenuator to correct for the attenuation of the filter.

f) Disconnect the signal feed for the channel to be measured and terminate the input socket with its nominal impedance.

g) Verify that the intermodulation products generated in the spectrum analyser over the entire channel are below the reference level by an amount at least 20 dB greater than the required distortion distance. If this is not the case, disconnect the bandpass filter and repeat steps d) to g) of this procedure with an increased input attenuation of the spectrum analyser.

h) Note the setting of the sensitivity control or the reference level control.

i) Reconnect the signal feed for the channel and repeat steps c) to h) of this procedure for all channels.

j) Connect the system to be tested between points A and B.

k) Adjust the centre frequency of the spectrum analyser as in step c) and insert the appropriate band-pass filter, if necessary.

l) Adjust the input attenuator (internal and/or external) to return the response of the spectrum analyser to the vision carrier to full scale with the appropriate setting of its sensitivity control (see step h)).

NOTE The external attenuator should be set to a minimum of 10 dB if the filter is in use; otherwise, the system under test will see a serious mismatch.

m) Disconnect the signal feed for the channel to be measured and terminate the input socket with its nominal impedance.

n) Note the frequencies at which intermodulation products occur and the level of these products compared with the reference level in the frequency range displayed by the spectrum analyser.

o) Reconnect the signal feed for the channel, adjust the analyser tuning so as to display the next 0,5 MHz range.

p) Repeat steps k) to o) until the entire channel has been examine.;

q) If the composite beats are clustered near the vision carrier, then the signal/composite beat ratio is read direct from the screen of the spectrum analyser. In cases where there are several clusters, then the ratio is calculated and the subjective effect will be obtained by using the following formula which assumes power addition of the beats:

$$\text{Signal/composite beat} = -10 \lg \sum_{j=1}^{M} 10^{-((L_j + K_j)/10)}$$

where

M is the number of different frequencies at which intermodulation products clusters occur;

L_j corresponds to the ratio, expressed in decibels, of the reference level, at the relevant frequency, to that of the intermodulation product;

--`,,```,,,,````-`-`,,`,,`,`,,`---
Copyright International Electrotechnical Commission
Provided by IHS under license with IEC
No reproduction or networking permitted without license from IHS Not for Resale

K_j is the weighting factor expressed in decibels at the relevant frequency as obtained from Figure 15, Figure 16, Figure 17 and Figure 18.

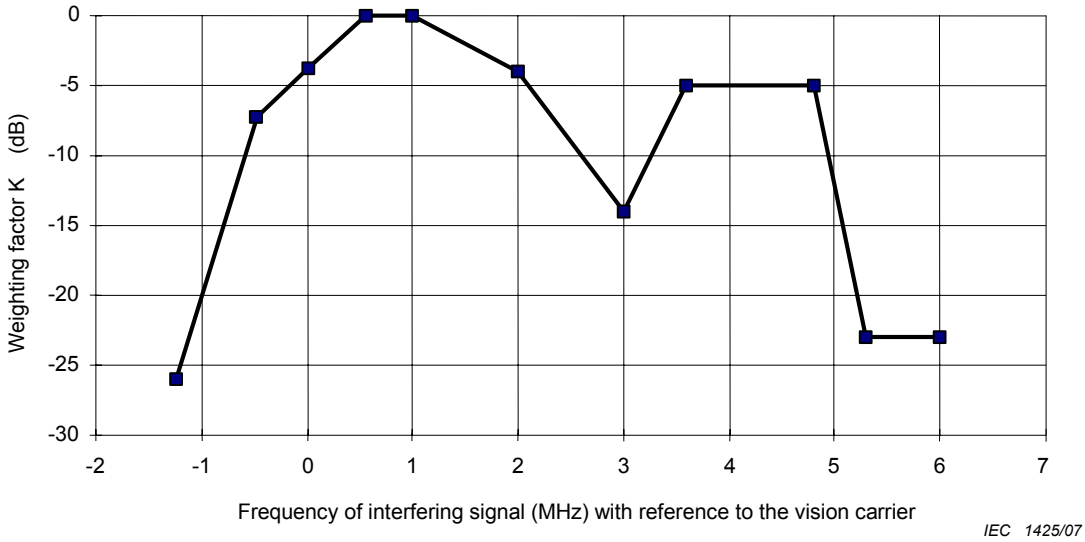

Figure 15 – Weighting curve for 625-line system B, G and D1 (PAL): CW interference with no special (frequency offset) control

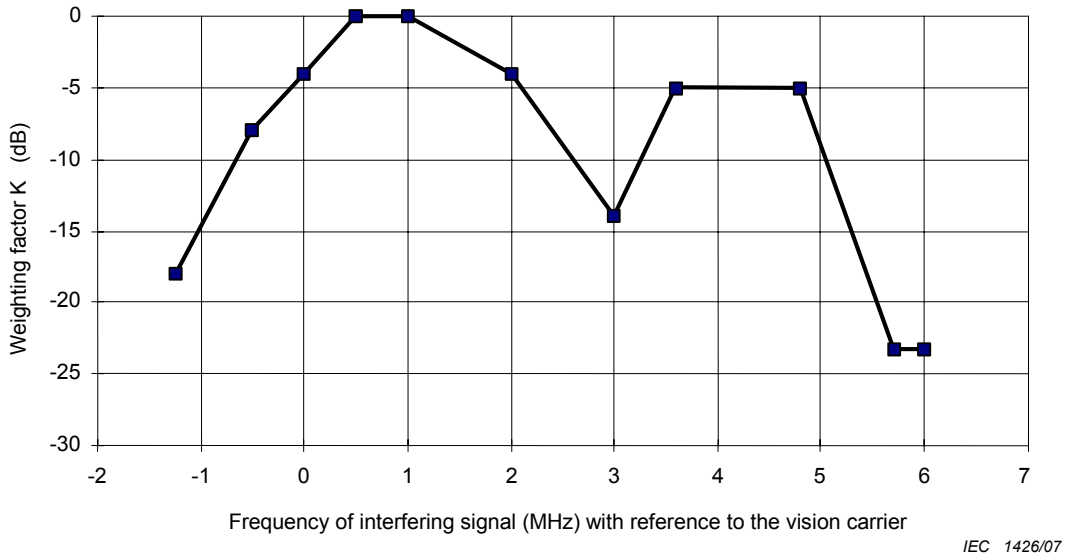

Figure 16 – Weighting curve for 625-line system I (PAL): CW interference with no special (frequency offset) control

Copyright International Electrotechnical Commission
Provided by IHS under license with IEC
No reproduction or networking permitted without license from IHS
Not for Resale

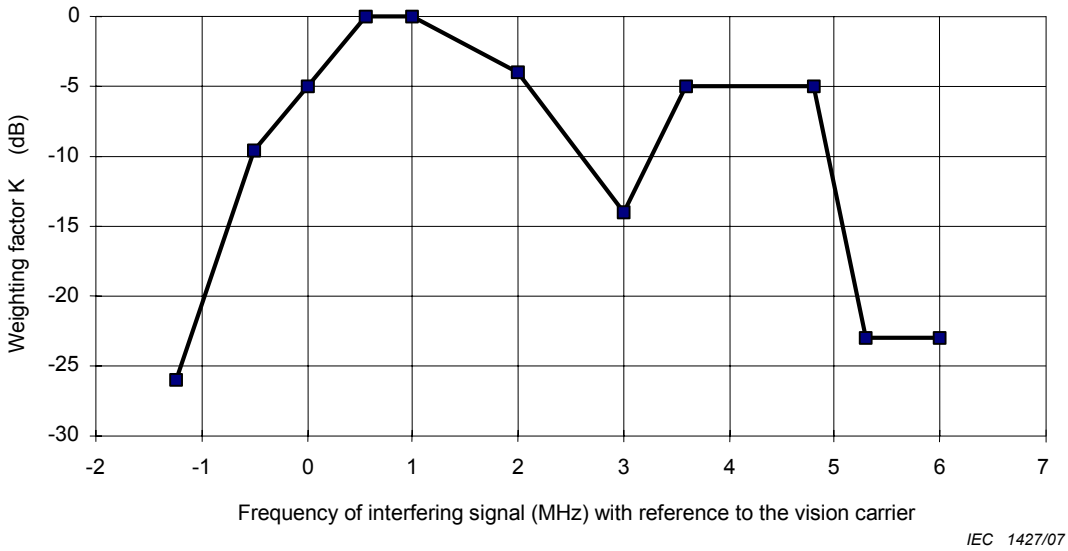

Figure 17 – Weighting curve for 625-line systems D and K (PAL): CW interference with no special (frequency offset) control

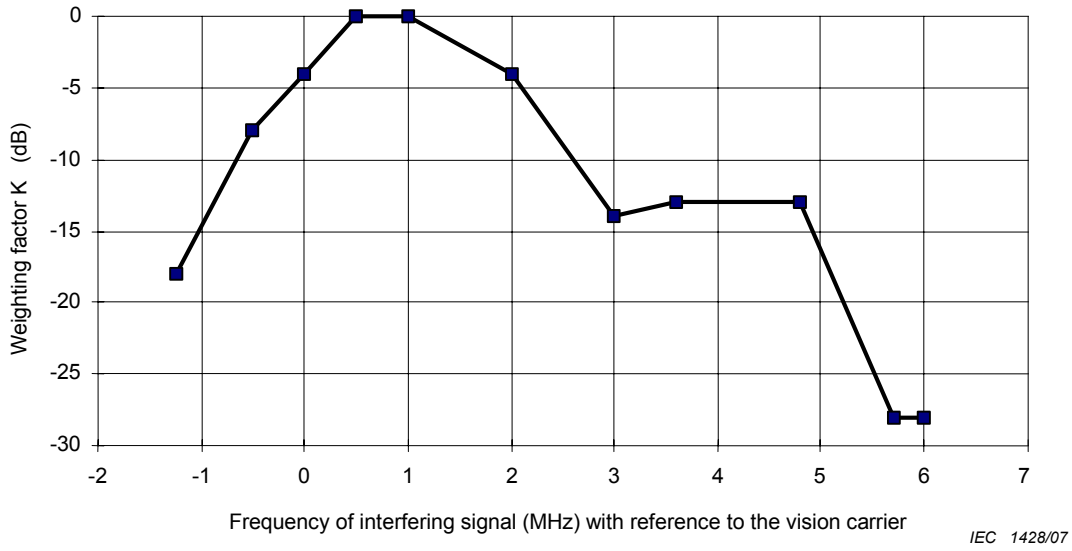

Figure 18 – Weighting curve for 625-line system L (SECAM): CW interference with no special (frequency offset) control

NOTE A cluster is a group of beats (intermodulation products) falling around a carrier or inside a TV channel.

r) Repeat the steps k) to p) of this procedure for every channel used in this test.

s) The signal/composite beat ratio for the system under test to be taken is the lowest obtained in step r).

4.5.3.6 Presentation of the results

The results are presented in a table showing the measured values of composite beats (CTB/CSO) for each relevant TV channel.

Copyright International Electrotechnical Commission
Provided by IHS under license with IEC
No reproduction or networking permitted without license from IHS Not for Resale

4.5.4 Composite crossmodulation

Under consideration.

4.5.5 Intermodulation noise

The method of measurement of signal to intermodulation noise ratio $S_{D,RF}/I_N$ is the same as for RF signal-to-noise ratio $S_{D,RF}/N$. The measurement is performed at the system outlet or at the output of a distribution equipment with the QAM channel load designed in operation.

4.5.6 Hum modulation of carriers

4.5.6.1 Introduction

This is a method of measurement of the amplitude modulation (AM), at supply frequencies and harmonics thereof, of the signals on cable networks.

A simplified procedure for use where lower sensitivity will suffice is outlined in 4.5.6.6. For relatively high levels of hum modulation, the two methods will yield the same result. Both of the above methods use a DC reference.

An alternative method using an AC reference is described in 4.5.6.7 to 4.5.6.9.

NOTE These methods are not suited to the measurement of "hum" modulation resulting from the use of switched-mode power supplies, due to the insertion of the 1 kHz low-pass filter. It may be possible to obtain such a measurement without the filter in the circuit, but the results may be inaccurate due to the presence of wideband noise. A revised method of measurement is currently under consideration.

4.5.6.2 Definition

The signal/hum ratio measured by this method is defined as:

$$signal/hum = 20 \lg \frac{reference\ \ modulation}{peak\text{-}to\text{-}peak\ "hum"\ modulation} \quad \text{dB}$$

When the reference modulation is a vision signal, its amplitude is that of the peak-to-peak composite signal (see Figure 19). For an AM sound signal, the reference modulation depth is taken to be 40 %.

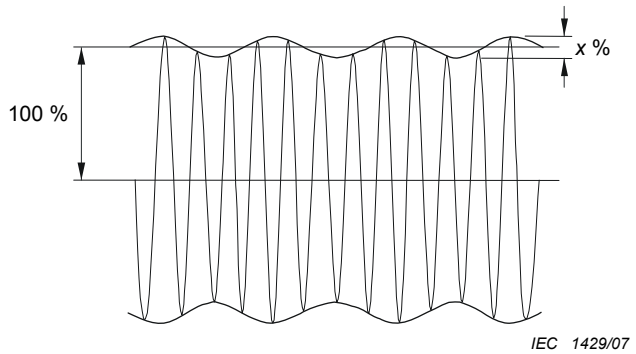

Figure 19 – Hum modulation envelope
(x = percentage peak-to-peak hum modulation)

4.5.6.3 Equipment required for DC method

The test set-up shall be well-matched.

Copyright International Electrotechnical Commission
Provided by IHS under license with IEC
No reproduction or networking permitted without license from IHS Not for Resale

NOTE 1 Items a), b), c) and e) of this subclause, if applicable, should preferably be powered from batteries (see also 4.5.6.4b)).

NOTE 2 In item b) of this subclause "negligible" means small compared with the level of hum modulation expected to be measured.

a) A CW signal generator with output frequency range and output level to suit the system to be tested (see NOTE 1).

b) A tuned signal amplifier to raise, with negligible distortion, the level of the test signal at the point of measurement to about 2 V_{RMS} (see NOTES 1 and 2).

c) An oscilloscope: dual channel, DC coupled, with differential facility, capable of measurement of a signal of 1 mV peak-to-peak (see NOTE 1).

d) A terminating RF detector of impedance equal to the Z_0 of the system under test.

e) A low-pass filter with 1 kHz cut-off; impedances to suit the detector output.

f) Two attenuators, variable in steps of 1 dB.

g) A calibrated potential divider (as shown in Figure 20).

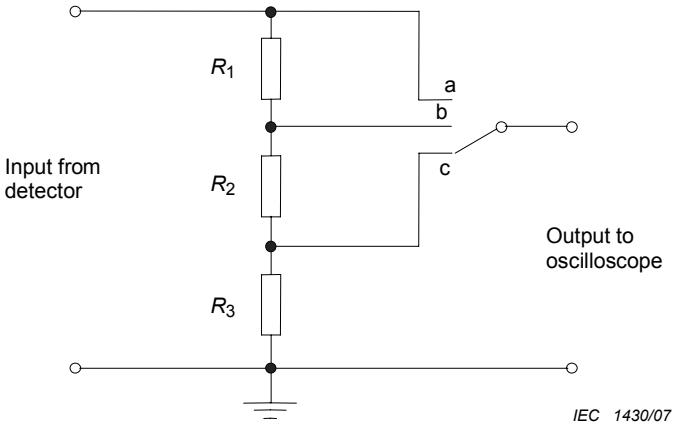

R_1 = 68 Ω ±1 %, R_2 = 200 Ω ±1 %, R_3 = 100 kΩ ± 5 %

NOTE These values take into account the input impedance of a typical oscilloscope (1 MΩ).

Figure 20 – Calibrated potential divider

h) A stable variable DC source (as shown in Figure 21).

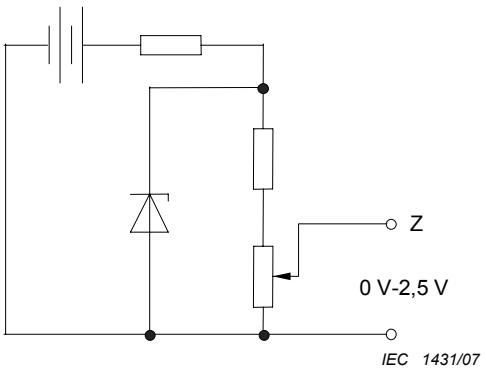

NOTE 1 Arrange polarity to suit detector and oscilloscope in use.

NOTE 2 Values chosen to suit the voltage of the battery and the Zener diode employed.

NOTE 3 Multi-turn potentiometer preferred for precise setting.

Figure 21 – Stable variable DC source

Copyright International Electrotechnical Commission
Provided by IHS under license with IEC
No reproduction or networking permitted without license from IHS Not for Resale

4.5.6.4 Connection of the equipment

a) If battery-powered equipment is available, this shall be connected as in Figure 22.

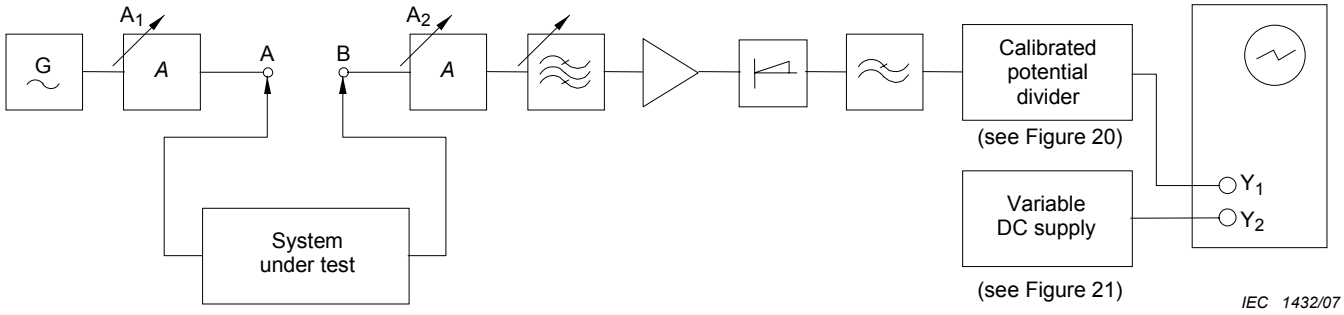

Figure 22 – Connection of equipment for measurement of hum modulation (DC method)

b) If mains-powered equipment is to be used, point A should be linked to point B and a check carried out in accordance with 4.5.6.5a) and 4.5.6.5c) to 4.5.6.5f), to ascertain that the level of hum modulation within the test equipment is such that it may be neglected. It shall be small compared with the maximum allowed by the relevant system performance requirement. If this check is satisfactory, the system to be tested may be connected as shown in Figure 22.

4.5.6.5 Measurement procedure

a) Set the signal generator frequency to that of the vision carrier (or sound carrier) of the channel to be tested.

b) Adjust attenuator A_1 to provide the correct level of CW signal at the input to the system; This level is equal to the RMS value of the relevant television signal during its modulation peaks or the unmodulated carrier level for sound.

c) Adjust attenuator A_2 to give a signal of about 2 V_{RMS} across the RF termination of the detector.

d) With the switch of the potential divider (Figure 20) set to "a", adjust the oscilloscope controls and the DC offset voltage to the Y_2 input to obtain a display of the demodulated hum signal. Note the peak-to-peak amplitude of the display.

e) Move the potential divider switch to "b" or "c", depending upon the amplitude of the displayed hum, and keeping all other settings adjusted as described in step d) of this subclause, note the change in DC level of the display; This change is equivalent to an amplitude reduction of 0,07 % for position "b", and of 0,3 % for position "c".

f) Interpolate the result obtained in step d) of this subclause, in relation to the change observed in step e) of this subclause, as a percentage of peak-to-peak (see Figure 23).

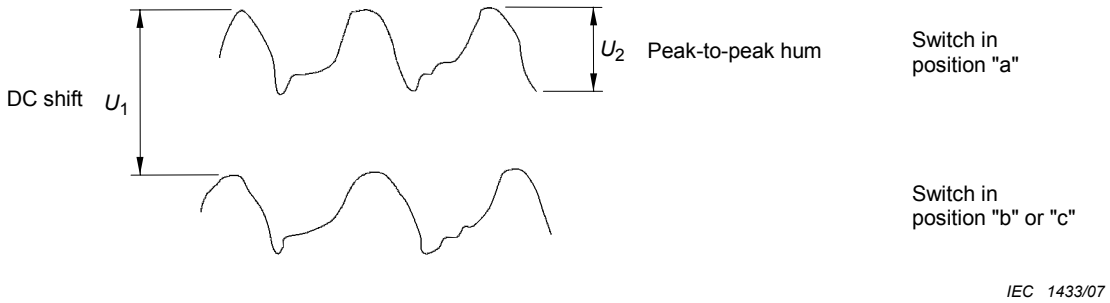

NOTE Percentage peak-to-peak hum = $U_2 / U_1 \times 0{,}07$ % for position "b" or $U_2 / U_1 \times 0{,}3$ % for position "c".

Figure 23 – Oscilloscope display

Copyright International Electrotechnical Commission
Provided by IHS under license with IEC
No reproduction or networking permitted without license from IHS Not for Resale

g) Calculate the signal/hum ratio (in dB) as follows:

$$signal/hum = 20 \lg \left(\frac{100}{\%\ peak\text{-}to\text{-}peak\ hum}\right) - R \quad \text{in dB}$$

where *R* is appropriate to the system, as given in Table 2.

4.5.6.6 Simplified procedure

a) Where suitable equipment is available and the values of signal/hum ratios to be measured are relatively high (signal/hum >> 34 dB to 40 dB), a simplified procedure may be adopted.

b) This entails the use of a tuned demodulator, for example, a signal level meter (having a DC coupled video output) and the measurement, with a suitable oscilloscope, of the DC and AC components of the hum modulated test carrier. Battery operation of the test equipment is again advisable and a low-pass filter (similar to that described in 4.5.6.3 e)) will also be required.

c) The calculation of signal/hum ratio (in dB) is then as follows:

$$signal/hum = 20 \lg \left(\frac{measured\ \ DC\ voltage}{measured\ \ peak\text{-}to\text{-}peak\ AC\ voltage}\right) - R \quad \text{in dB}$$

Table 2 – Residual carrier reduction factors

Maximum modulation depth %	Residual carrier %	Reduction factor *R* dB
95	5	0,5
90	10	1
80	20	2
40 (see NOTE)	(see NOTE)	2
NOTE In the case of AC amplitude modulation of a sound carrier, the term "residual carrier" is not appropriate.		

4.5.6.7 Equipment required for AC method

The test set-up shall be well-matched and shall consist of

a) a CW signal generator, with output frequency range and output level to suit the system to be tested, and with provision for sinewave modulation at a frequency up to 1 kHz (see NOTES 1 and 3),

b) a tuned signal amplifier, to raise, with negligible distortion, the level of the test signal at the point of measurement to about 2 V_{RMS} (see NOTES 1 and 2),

c) Two variable RF attenuators A_1 and A_2, variable in 1 dB steps and suitable for the frequency of operation and for the impedance of the system under test,

d) a terminating RF detector of impedance equal to that of the system under test,

e) an audio frequency amplifier, AC coupled and having sufficient gain to raise the level of the detected hum signal to a value providing a suitable display on the oscilloscope, and of output impedance to match the attenuator (see item f) and NOTE 1),

f) an audio frequency attenuator A_3 variable in 1 dB steps and having a minimum range of 60 dB,

g) a low-pass filter with a 1,0 kHz cut-off frequency and impedance to match the output of the audio frequency attenuator (see item f) and NOTE 3),

h) an audio frequency termination having an impedance matching the output of the low-pass filter (see item g)),

--`,,```,,,,````-`-`,,`,,`,`,,`---

Copyright International Electrotechnical Commission
Provided by IHS under license with IEC
No reproduction or networking permitted without license from IHS Not for Resale

i) a single channel audio frequency AC coupled oscilloscope having a sensitivity depending on the choice of amplifier (see item e) and NOTE 1).

NOTE 1 The equipment of items a), b), e) and i) of this subclause should be powered preferably from batteries (see also 4.5.6.9 b).

NOTE 2 "Negligible" is understood to mean small compared with the level of hum modulation expected to be measured.

NOTE 3 The use of a modulation frequency as low as 200 Hz with a corresponding low-pass filter may be preferable when the detected hum is largely affected by random noise.

4.5.6.8 Connection of the equipment

If battery-powered equipment is available this is connected as shown in Figure 24.

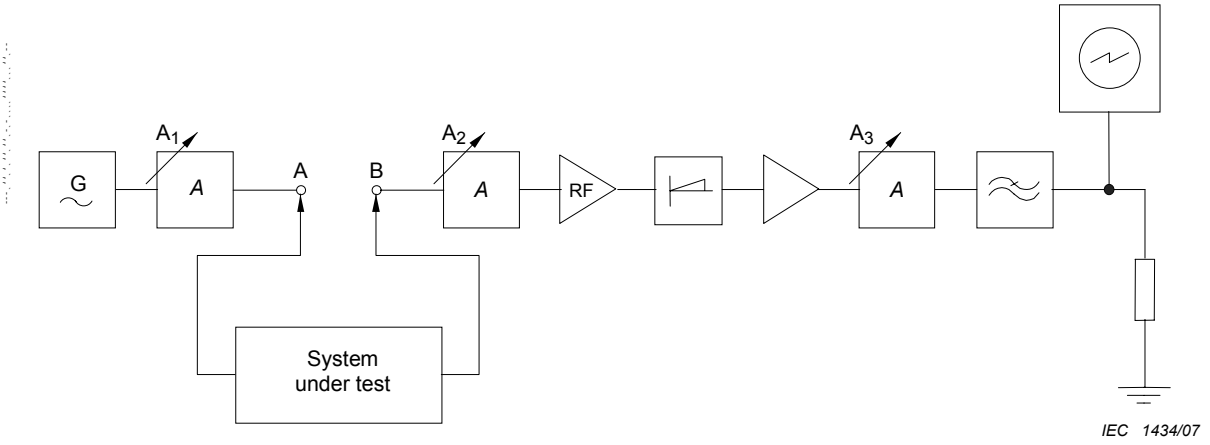

Figure 24 – Connection of equipment for hum modulation measurement (AC method)

If mains-powered equipment is to be used, point A should be linked to point B and a check carried out in accordance with 4.5.6.9 to ascertain that the level of hum modulation within the test equipment is such that it may be neglected. It shall be small compared with the maximum allowed by the relevant system performance requirement. If this check is satisfactory, the system to be tested may be connected as shown in Figure 24.

4.5.6.9 Measurement procedure

a) Ensure that the modulation depth indicator on the signal generator is correctly calibrated at the frequencies and modulation depths to be used in the measurement; see Annex A and step c) below.

b) Set the signal generator frequency to that of the vision carrier (or sound carrier) of the channel to be tested.

c) Modulate the carrier to a depth of 1 % at a suitable frequency in the range 100 Hz to 1 kHz.

d) Adjust attenuator A_1 to provide the correct mean level of modulated CW signal at the input to the system; This level is equal to the RMS value of the relevant TV signal during its modulation peaks or to the unmodulated carrier level for sound.

e) Adjust attenuator A_2 to give a signal of about 2 V_{RMS} across the RF termination of the detector.

f) With the audio attenuator A_3 set to 60 dB attenuation, adjust the oscilloscope controls and audio amplifier gain, if necessary, to provide a suitable display on the oscilloscope; Note the peak-to-peak amplitude of the display.

g) Remove the modulation of the carrier;

Copyright International Electrotechnical Commission
Provided by IHS under license with IEC
No reproduction or networking permitted without license from IHS Not for Resale

h) Readjust the audio attenuator to provide on the oscilloscope a display of the hum having a peak-to-peak amplitude equal to that noted in step f); Note the change in the attenuator reading α.

i) Calculate the signal/hum ratio (in dB) as follows:

$$signal/hum = 34 + (\alpha - R) \quad \text{dB}$$

where

α is the change in attenuator reading (in step h));

R is a reduction factor given in Table 2 of 4.5.6.6c)).

4.5.6.10 Presentation of the results

The results are presented in a table showing the measured values of hum modulation for the vision carrier (or sound carrier) of each relevant TV channel.

4.5.7 Differential gain and phase

4.5.7.1 Introduction

The methods described are applicable to the measurement of differential gain and differential phase for complete systems and constituent items of equipment. The test signals employed are, in both cases, those recommended in ITU-T Recommendation J.61, and are shown in Figure 25a and Figure 25b. The definitions are also those given in the same recommendation.

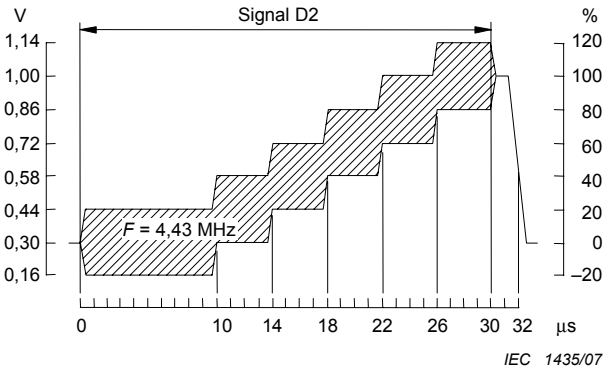

NOTE In full field-test signals, each tread of the staircase may have a duration of 8,66 µs.

Figure 25a – Signal D2 for 625-line system

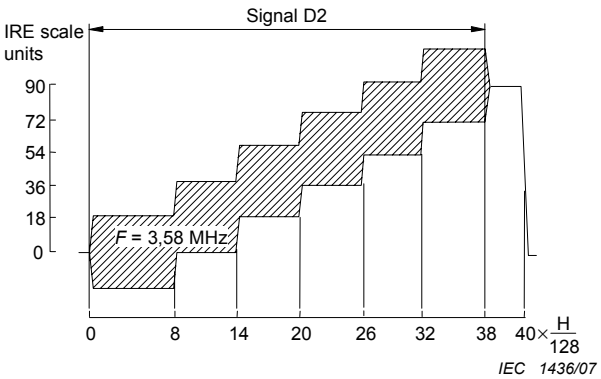

NOTE 1 Scale refers to tread levels.
NOTE 2 Sub-carrier amplitude is ±20 IRE units.

Figure 25b – Signal D2 for 525-line system

Figure 25 – Signal D2

It is intended that these measurements are carried out with test signals inserted at the system headend. They may be either of the full field type or, where convenient, may be inserted in the field blanking period.

The use of inserted test signals available on the broadcast TV channels is not generally recommended as these are subject to variations beyond the control of the user. However, where such signals, of known stability and of adequate quality, are available, they may be used to carry out these measurements.

--`,,```,,,,````-`-`,,`,,`,`,,`---

Copyright International Electrotechnical Commission
Provided by IHS under license with IEC
No reproduction or networking permitted without license from IHS Not for Resale

4.5.7.2 Differential gain

4.5.7.2.1 Definition

Differential gain is expressed by two values: *x %* and *y %,* which represent the two peak amplitudes of the sub-carrier relative to the amplitude of the sub-carrier at blanking level. In the case of a monotonic characteristic, either *x* or *y* will be zero.

Differential gain, in percentage referred to blanking level, can be found from the following expressions:

$$x = 100\,(\frac{A_{max}}{A_0} - 1) \quad \text{and} \quad y = 100\,(\frac{A_{min}}{A_0} - 1)$$

Peak-to-peak differential gain can be found from the expression:

$$100\ \frac{A_{max} - A_{min}}{A_0} = x - y$$

where

A_{max} and A_{min} are defined as shown in Figure 26.

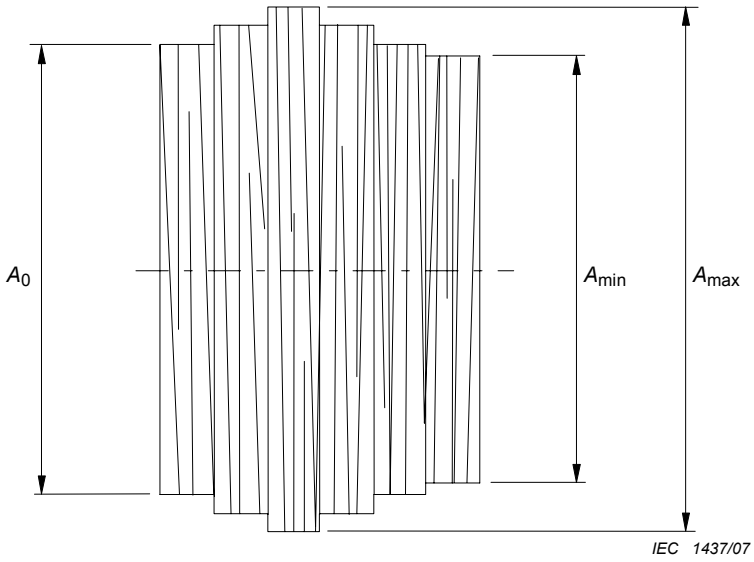

Figure 26 – Example of the modified staircase waveform

A_0 is the amplitude of the received sub-carrier at blanking level;

A is the amplitude of the sub-carrier of one of the other treads of the staircase.

4.5.7.2.2 Equipment required

The test set-up shall be well-matched and shall consist of

a) an oscilloscope which will not contribute significant distortion to the signal displayed,

b) a modulator (unless transmitted test signals in the field blanking interval are to be used) having the following characteristics:

   1) radio-frequency characteristics (excluding sound) corresponding to ITU-R Recommendation BT.470, and appropriate to the television transmission system used;

   2) video signal input requirement of 1 V peak-to-peak composite;

   3) a modulated output signal of a convenient amplitude,

Copyright International Electrotechnical Commission
Provided by IHS under license with IEC
No reproduction or networking permitted without license from IHS Not for Resale

c) a synchronous demodulator having characteristics appropriate to the television transmission system used,

d) two attenuators variable in steps of not more than 1 dB,

e) a band-pass filter having f_0 = 4,43 MHz or 3,58 MHz (the chrominance sub-carrier frequency) and a bandwidth of 0,5 MHz,

f) a test signal generator (unless transmitted test signals are used) providing signals having characteristics appropriate to the television transmission system under consideration, as specified in ITU-T Recommendation J.61 (signal D2), although a lower chrominance amplitude would be acceptable.

NOTE Most commercially available test signal generators will provide this signal as part of a composite test line.

4.5.7.2.3 Connection of the equipment

The equipment shall be connected as in Figure 27.

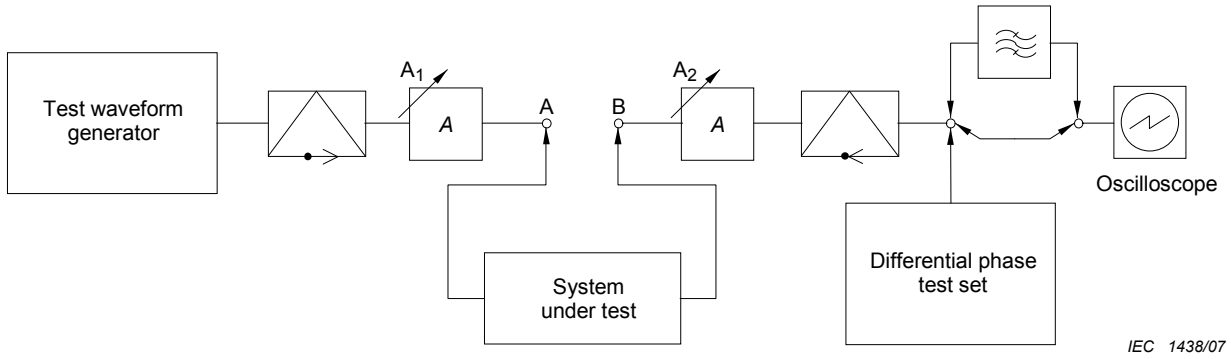

Figure 27 – Arrangement of test equipment for measurement of differential gain and phase

4.5.7.2.4 Measurement procedure

a) With point A directly connected to point B (see Figure 27), adjust attenuator A_1 for an output level sufficient to drive the system to be tested and attenuator A_2 to obtain the correct input level to the demodulator.

b) Insert the appropriate band-pass filter after the demodulator (see Figure 27) and measure the differential gain by examining the modified staircase waveform (see Figure 26 and 4.5.7.2.1).

c) Ensure that the distortion of the test signal caused by the control loop (test equipment) is small compared with the maximum distortion allowed for the system or equipment to be tested.

NOTE Where the linearity of the modulator/demodulator is such that on systems B and G (10 % residual carrier) this requirement cannot be met, it will be necessary either to reduce the sub-carrier amplitude or to ignore the sixth (uppermost) tread.

d) Connect the system or equipment to be tested between points A and B, and disconnect the band-pass filter; Adjust attenuator A_2 to return the input level to the demodulator to that used in step a).

e) Reinsert the band-pass filter and measure the maximum differential gain by examining the modified staircase waveform (see Figure 26 and 4.5.7.2.1).

NOTE This result includes the distortion due to the test equipment as well as the system under test.

Copyright International Electrotechnical Commission
Provided by IHS under license with IEC
No reproduction or networking permitted without license from IHS Not for Resale

4.5.7.3 Differential phase

4.5.7.3.1 Definition

Differential phase is expressed by two values *x* and *y*, in degrees, which represent the two peak phases of the sub-carrier relative to the phase of the sub-carrier at blanking level. In the case of a monotonic characteristic, either *x* or *y* will be zero.

Differential phase, in degrees, referred to blanking level, can be found from the expressions below:

$$a = \Phi_{max} - \Phi_0 \quad \text{and} \quad b = \Phi_{min} - \Phi_0$$

Peak-to-peak differential phase can be found from the expression:

$$\Phi_{max} - \Phi_{min} = a - b$$

where

Φ is the phase of the received sub-carrier on one of the other treads of the staircase;

Φ_0 is the phase of the received sub-carrier at blanking level;

Φ_{max} is the maximum value of Φ obtained by examining each tread of the staircase;

Φ_{min} is the minimum value of Φ obtained by examining each tread of the staircase.

4.5.7.3.2 Equipment required

a) A modulator (unless transmitted test signals in the field blanking intervals are to be used) having the following characteristics:
   1) radio-frequency characteristics (excluding sound) corresponding to ITU-R Recommendation BT.470, and appropriate to the television transmission system used;
   2) video signal input requirement of 1 V peak-to-peak composite;
   3) a modulated output signal of a convenient amplitude.
b) A synchronous demodulator having characteristics appropriate to the television transmission system used.
c) Two attenuators variable in steps of not more than 1 dB.
d) A test set capable of measuring the difference in phase of the sub-carrier at each tread of the staircase, compared with that at the reference (black) level.
e) A test waveform generator (unless transmitted test signals in the field blanking intervals are to be used) providing signals having characteristics appropriate to the television transmission system under consideration, as specified in ITU-T Recommendation J.61 (signal D2), although a lower amplitude of the chrominance component would be acceptable (see NOTE to 4.5.7.2.2f)).

NOTE Certain types of test sets (see item d)) require the presence of a colour burst during the back porch period of the test signal.

4.5.7.3.3 Connection of the equipment

The equipment shall be connected as in Figure 27.

4.5.7.3.4 Measurement procedure

a) With point A directly connected to point B (see Figure 27) adjust attenuator A_1 for an output level sufficient to drive the system to be tested and attenuator A_2 to obtain the correct input level to the demodulator; Connect the differential phase test set.

--`,,```,,,,````-`-`,,`,,`,`,,`---

Copyright International Electrotechnical Commission
Provided by IHS under license with IEC
No reproduction or networking permitted without license from IHS Not for Resale

b) Ensure that the distortion of the test signal due to the control loop (test equipment) is small compared with the maximum distortion allowed for the system or equipment to be tested (see also NOTE to 4.5.7.2.4c)).

c) Connect the system or equipment to be tested between points A and B; Adjust attenuator A_2 to return the input level to the demodulator to that used in step a) of this subclause.

d) Determine the relative sub-carrier phases corresponding to the six treads of the staircase waveform; The differential phase (*x* and *y*) of the system or equipment under test is the phase change between the blanking level tread and that of any other tread of the staircase as defined in 4.5.7.3.1. The peak-to-peak differential phase can be calculated according to 4.5.7.3.1.

4.5.7.4 Presentation of the results

The results of the measurement of the differential gain shall be presented indicating the two measured values *x* % and *y* %, referred to the relevant TV channel.

The results of the measurement of the differential phase shall be presented indicating the two measured values *x* and *y*, in degrees, referred to the relevant TV channel.

4.6 Carrier-to-noise ratio

4.6.1 Introduction

The method described is applicable to the measurement of the carrier to random noise ratio within a television channel at a specified point within a cable network. The method of measurement actually determines carrier (plus noise) to noise ratio; however, the difference between this and the carrier-to-noise ratio is very small if the value exceeds 20 dB.

The method assumes that the random noise is evenly distributed within the channel.

4.6.2 Equipment required

a) A measuring receiver with a known noise bandwidth less than that of the channel to be measured;

b) A CW signal generator covering the frequencies at which the tests are to be carried out;

c) A variable attenuator with a range greater than the carrier-to-noise ratio expected;

d) A shielded terminating resistor.

NOTE Additional items may be necessary, for example, to ensure correct calibration and operation of the test equipment (see Annex B).

4.6.3 Connection of the equipment

The equipment shall be connected as in Figure 28.

--`,,```,,,,````-`-`,,`,,`,`,,`---

Copyright International Electrotechnical Commission
Provided by IHS under license with IEC
No reproduction or networking permitted without license from IHS Not for Resale

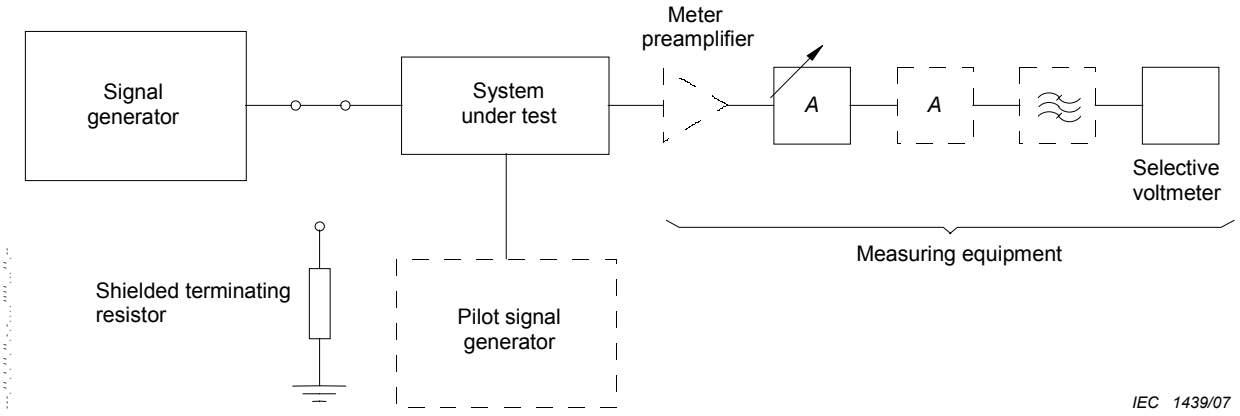

NOTE Dotted lines signify additional items, which may be required.

Figure 28 – Arrangement of test equipment for carrier-to-noise ratio measurement

4.6.4 Measurement set-up

4.6.4.1 General

a) The test set-up shall be well-matched and the sensitivity of the measuring equipment (see Annex C) shall be known over the frequency range of the channel to be measured.

b) Where the system to be measured includes

   1) automatic gain control (AGC), tests should be carried out at minimum and maximum levels of signal input,

   2) automatic level control (ALC), pilot signals of the correct type, frequency and level shall be maintained throughout the tests.

c) The measuring receiver shall be calibrated and checked for satisfactory operation as explained in 4.6.4.2 and 4.6.4.3.

4.6.4.2 Calibration

- Level correction, average/RMS or peak/RMS (see Annex D)
- Noise bandwidth (see Annex E)

4.6.4.3 Other checks

- Sensitivity (see Annex B)
- Noise (see Annex C)
- Intermodulation (see Annex C)
- Overload (see Annex C)

4.6.5 Measurement procedure

a) Set the signal generator frequency to the vision carrier frequency of the channel to be tested and adjust its output, and those of the different points of the system as far as the point of measurement, to obtain the specified system operating levels throughout.

b) Connect the variable attenuator and measuring receiver (and other items if required, see Annex B) to the point of measurement; Tune the measuring receiver to the reference signal and note the attenuator value α_1 required to obtain a convenient measuring receiver reading *R*; The attenuator value α_1 should be slightly greater than the signal-to-noise ratio expected at the point of measurement.

Copyright International Electrotechnical Commission
Provided by IHS under license with IEC
No reproduction or networking permitted without license from IHS Not for Resale

c) Disconnect the generator and replace it by the shielded terminating resistor, or, if the reference signal is used for AGC, retune the measuring receiver within the channel in such a way that it is influenced only by random noise. Reduce the attenuator setting to the value α_2 required to obtain the same measuring receiver reading R.

d) The carrier-to-noise ratio in decibel is given by

$$C/N = \alpha_1 - \alpha_2 - C_m - C_b$$

where

α_1 is the attenuator value for the reference signal;

α_2 is the attenuator value for the noise;

C_m is the measuring receiver level correction factor (see Annex D);

C_b is the bandwidth correction factor (see Annex D).

4.6.6 Presentation of the results

The result of the measurement of the carrier-to-noise ratio shall be presented indicating the measured value referred to the relevant TV channel.

4.7 Echoes

4.7.1 Introduction

The method described is applicable to the measurement of the amplitude and time displacement of an echo at a specified point within a cable network by the use of a 2T-sine-squared pulse with the graticule as shown in Figure 29. From these measurements, an "echo-rating" is derived.

Copyright International Electrotechnical Commission
Provided by IHS under license with IEC
No reproduction or networking permitted without license from IHS Not for Resale

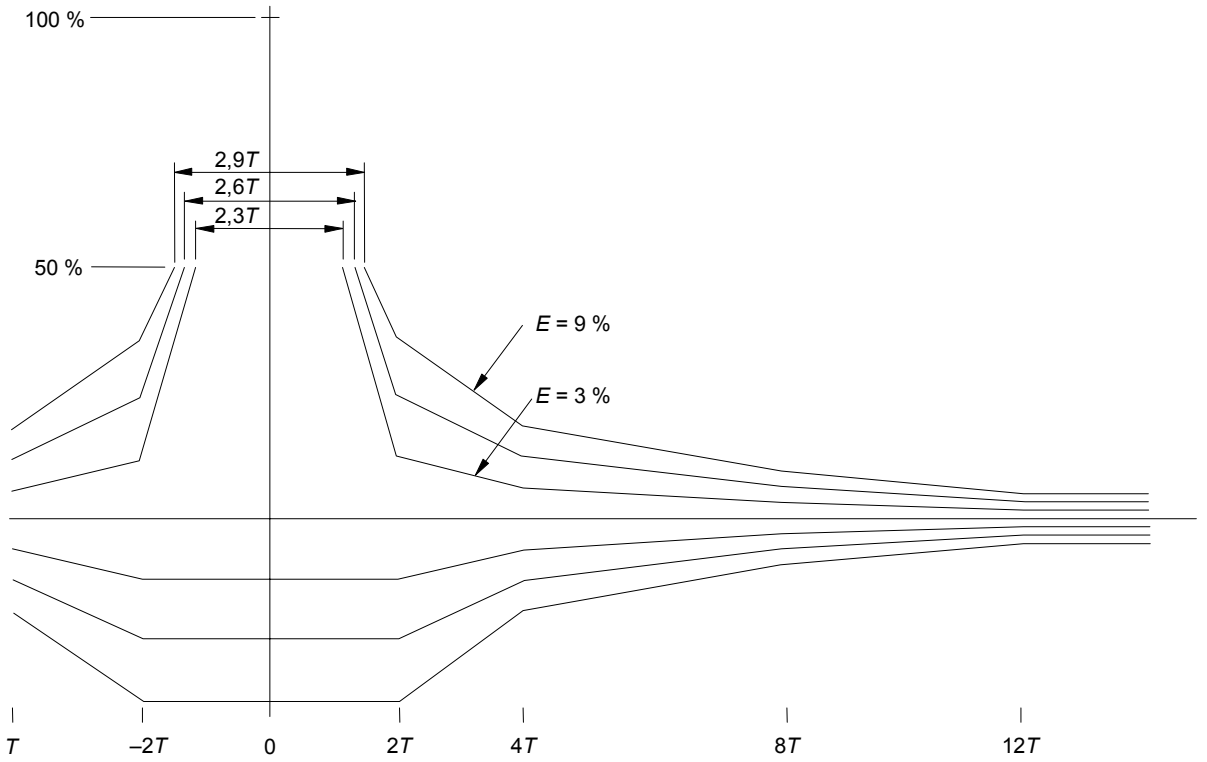

±T	Maximum amplitude for a given E rating (%)		
	3	6	9
0	+100, –12	+100, –24	+100, –36
2	±12	±24	±36
4	±6	±12	±18
8	±3	±6	±9
12	±1,5	±3	±4,5

Figure 29 – Echo rating graticule

4.7.2 Equipment required

The test set-up shall be well-matched and shall consist of

a) a test waveform generator providing a sine-squared pulse of half amplitude duration equal to 2*T*, where *T* = 100 ns is the period time; The test signals are in accordance with ITU-T Recommendation J.61,

b) a modulator having RF characteristics (excluding sound) appropriate to the television system under consideration (see ITU-R Recommendation BT.470) and input characteristics to suit the generator in item a),

c) a synchronous demodulator having characteristics appropriate to the television system under consideration,

d) two attenuators variable in 1 dB steps,

Copyright International Electrotechnical Commission
Provided by IHS under license with IEC
No reproduction or networking permitted without license from IHS Not for Resale

e) an oscilloscope of negligible distortion up to 5 MHz, fitted with a graticule as shown in Figure 29.

4.7.3 Connection of the equipment

The equipment shall be connected as in Figure 30.

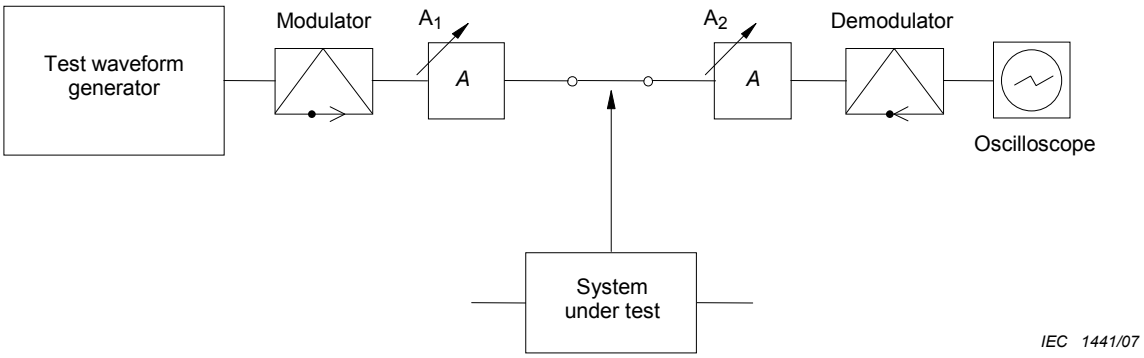

Figure 30 – Arrangement of test equipment for measurement of echo rating

4.7.4 Measurement procedure

a) With the equipment connected as shown in Figure 30, adjust the oscilloscope time-base speed to correspond with the *T*-scale on the graticule; Adjust the vertical gain and position controls to "fit" the pulse between the zero line and the pulse peak reference point; Examine the performance of the test equipment (control loop), which shall be such that an *E*-rating of not greater than 3 % is achieved; When frequency conversion is involved, the test equipment shall be checked at both the input and output channels.

b) Connect the test equipment to the system as shown in Figure 30; Adjust the variable attenuator A_1 to provide an input signal to the system at a level equal to that at which it normally operates; Adjust the attenuator A_2 to provide an input signal to the demodulator equal to that used in step a) of this subclause.

c) Using the graticule as a reference, as before, determine the *E*-rating for each echo and note that of the echo with the highest rating.

d) Using the horizontal shift control of the oscilloscope slowly move the display to the left and examine any long-distance echoes; These should be rated using the parallel section of the graticule at the extreme right. Note the highest rating.

e) The *E*-rating for the system is the higher of the two figures noted in steps c) and d) of this subclause.

NOTE This result will not be that of the system alone. It is modified by the inherent distortion in the test equipment, usually due to group delay errors.

4.7.5 Presentation of the results

The result of the measurement of the echo shall be presented indicating the measured value of the *E*-rating referred to the relevant TV channel.

4.8 AM-VSB television, FM radio and FM television signal level

4.8.1 General

The method of measurement described is applicable to the measurement of AM or FM carriers.

--`,,```,,,,````-`-`,,`,,`,`,,`---

Copyright International Electrotechnical Commission
Provided by IHS under license with IEC
No reproduction or networking permitted without license from IHS Not for Resale

4.8.2 Definitions for NTSC, PAL and SECAM systems

4.8.2.1 Signal level for AM-VSB vision carriers

The vision carrier signal level is the RMS value of the vision carrier at the peak of the modulation envelope, expressed in dB(μV) and measured across a 75 Ω termination or referred to 75 Ω.

This will correspond, in negative modulation systems, to the carrier amplitude during synchronizing pulses and, in positive modulation systems, to that at peak white level without a chrominance signal, as shown in ITU-R Recommendation BT.470, Figure 1.

4.8.2.2 AM or FM sound carrier level

The level of an AM or FM sound signal is the RMS value of the unmodulated carrier expressed in dB(μV) and measured across a 75 Ω termination or referred to 75 Ω.

4.8.2.3 Signal level for FM radio or FM television

The level of an FM radio or a FM TV signal is the RMS value of the unmodulated carrier expressed in dB(μV) and measured across a 75 Ω termination or referred to 75 Ω.

4.8.3 Equipment required

A "well-matched" radio-frequency measuring receiver having

a) a nominal input impedance of 75 Ω or transformed to 75 Ω and being calibrated in dB(μV),
b) a detection system capable of attaining the peak of the AM carrier to be measured,
c) facilities to adjust the detector characteristics for the measurement of AM and FM carriers,
d) a passband of at least 120 kHz, with sufficient selectivity to ensure that carriers other than those measured shall not influence the result.

NOTE The accuracy of the radio-frequency measuring receiver is not specified, since this will depend on the purpose of the measurement. Laboratory instrumentation can achieve better than ±0,5 dB, but most level measurements on an operating cable network are concerned with levels at system outlets. For this application, less expensive portable equipment, whose overall accuracy is unlikely to be better than ±2 dB, is usually found to be acceptable. A spectrum analyser can also be used.

4.8.4 Measurement procedure

a) When signal levels are to be measured where a high ambient field is present, the measuring receiver or the spectrum analyser shall be checked for spurious readings. Connect a shielded termination to its input cable, place both meter and lead approximately in their measurement positions and check that there is a negligible reading at the frequencies and on the meter ranges to be used.
b) Connect the measuring receiver or spectrum analyser to the point of measurement by means of a suitable coaxial cable, taking care to maintain correct impedance matching.
c) Read the signal level in accordance with the instructions provided by the instrument manufacturer and note the results; When recording the results, the measurement accuracy of the instrument shall be stated.

If the input impedance of the measuring receiver or spectrum analyser is other than 75 Ω and a matching device is required, or if any other interface equipment is employed, then an allowance shall be made for the resultant change in voltage level. Losses in the interconnecting cables, where these are significant, shall also be taken into account.

For positive AM-VSB modulation TV systems, the measuring receiver shall remain connected for a sufficient period to ensure that the maximum reading is obtained. It may therefore be

--`,,```,,,,````-`-`,,`,,`,`,,`---

Copyright International Electrotechnical Commission
Provided by IHS under license with IEC
No reproduction or networking permitted without license from IHS Not for Resale

necessary to observe the picture in order to ensure that peak white is present in the signal during the measurement.

In the case of a dual outlet, the unused outlet shall be terminated with the correct characteristic impedance during the measurement.

When using a spectrum analyser, the peak hold mode shall be used.

4.8.5 Presentation of the results

The result of the measurement of the signal level shall be presented indicating the measured value, expressed in dB(μV) (being measured across a 75 Ω termination or referred to 75 Ω), and referred to the vision or sound carrier of the relevant TV channel.

4.9 Data echo rating and data delay inequality

Under consideration.

4.10 Interference in FM sound radio channels

Under consideration.

4.11 Methods of measurement for digitally modulated signals

4.11.1 Introduction

The methods of measurement for digitally modulated signals differ from those for analogue modulation for several reasons:

a) the carrier is not present in the modulated signal and therefore cannot be measured (e.g. in DVB systems using PSK, APSK or QAM modulation) or there are thousands of carriers (e.g. in DVB systems using COFDM modulation);

b) the modulated signal has a spectrum that is flat in the bandwidth and is similar to noise;

c) the parameters that affect the quality of the received signal are related to the bit and word errors introduced by the channel (noise, amplitude and phase response inequalities, echoes, etc.) before demodulation and error correction.

4.11.2 Basic assumptions and measurement interfaces

The methods of measurement for digitally modulated signals are based on the assumption that

a) the MPEG-2/MPEG-4 transport stream (TS) is the specified input and output signal for all the baseline systems, i.e. for satellite, cable, SMATV, MMDS/MVDS and terrestrial distribution;

b) the digitally modulated signals received by satellite are modulated in the PSK/APSK formats, i.e. according to ETSI EN 300 421 and ETSI EN 302 307 for the various PSK/APSK formats, and can be distributed in the same format in cable systems (SMATV systems);

c) the digitally modulated signals received by satellite are distributed in CATV systems in the QAM format, i.e. according to ETSI EN 300 429;

d) the digitally modulated signals received from terrestrial broadcasting in the OFDM format may be distributed in SMATV systems in the same OFDM format or in CATV systems in DVB-C format via baseband demodulation and remodulation;

e) a I/Q baseband signal source for PSK, QAM or OFDM formats is available, as described in Figure 31; appropriate interfaces are accessible and are consistent with the DVB-SI documents (see document ETSI TR 101 211 and ETSI EN 300 468);

Copyright International Electrotechnical Commission
Provided by IHS under license with IEC
No reproduction or networking permitted without license from IHS Not for Resale

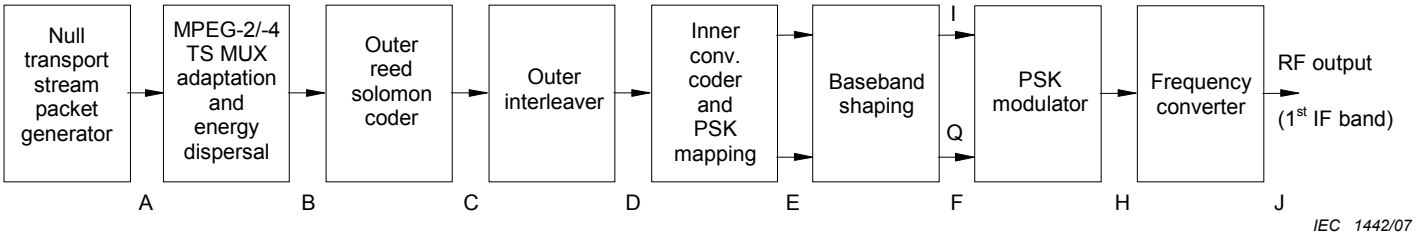

Figure 31a1 – PSK modulation (QPSK, BPSK or TC8PSK)

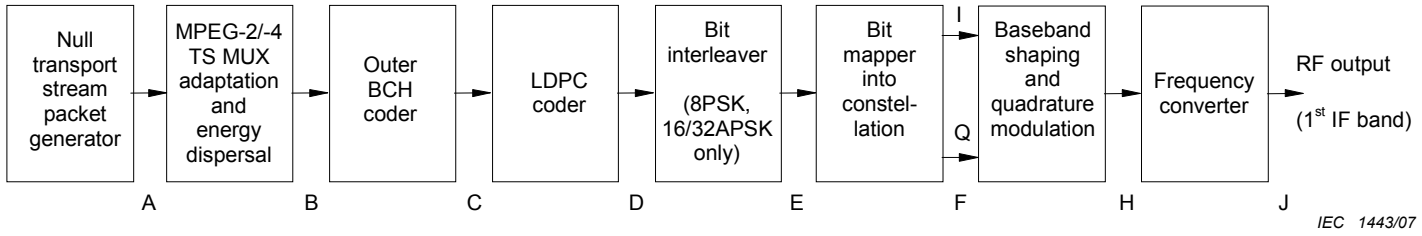

Figure 31a2 – DVB-S2 modulation (QPSK, 8PSK, 16APSK, 32APSK)

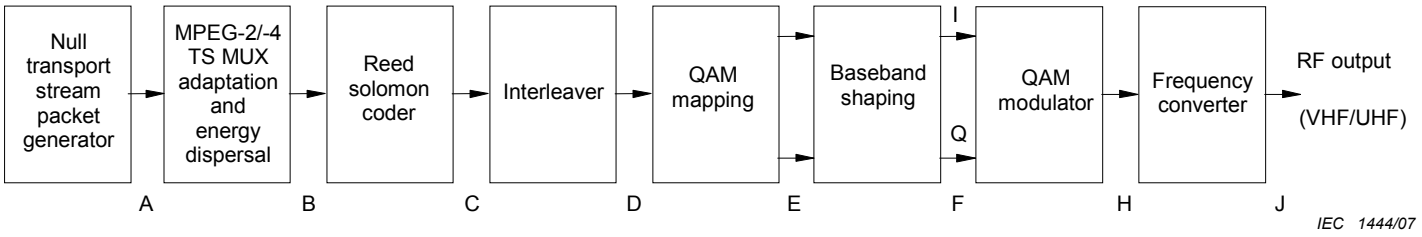

Figure 31b – QAM modulation

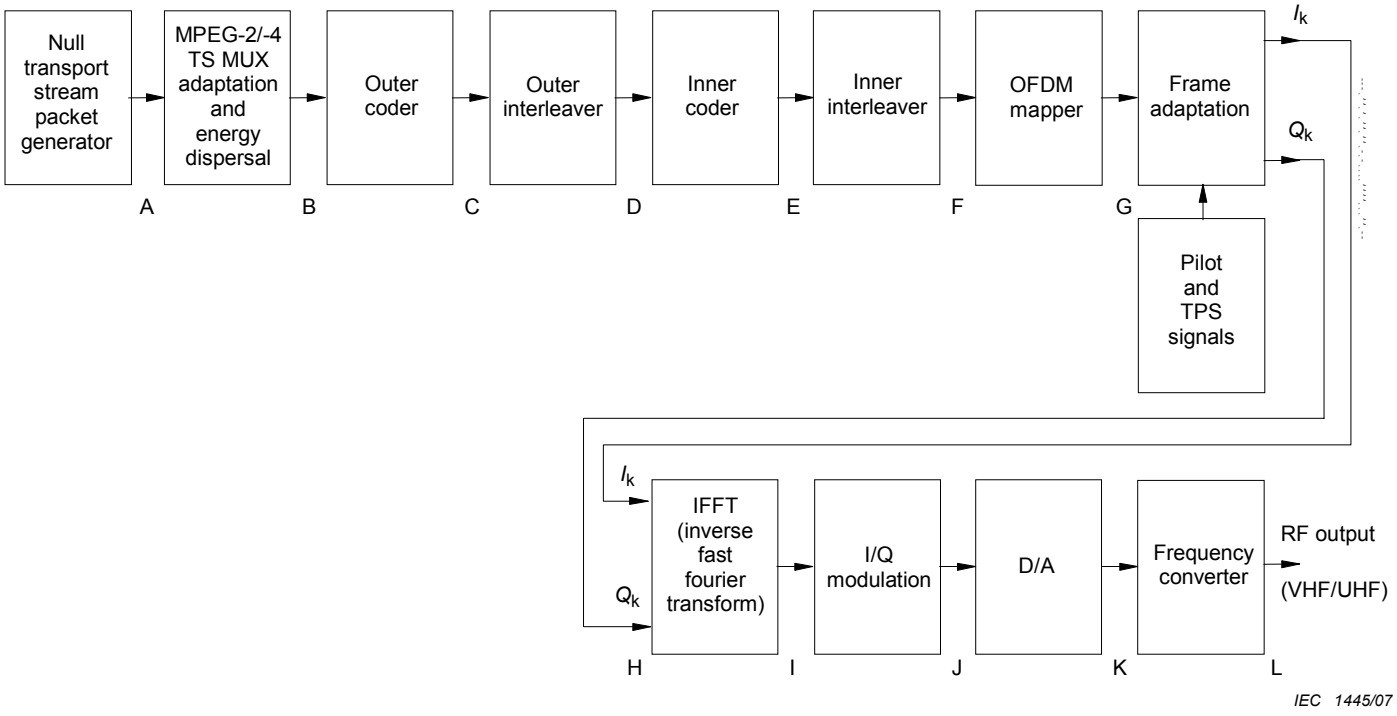

Figure 31c – OFDM modulation

NOTE The null transport stream packet generator can be replaced by a pseudo-random bit sequence generator (PRBS).

Figure 31 – I/Q signal source and RF modulator

Copyright International Electrotechnical Commission
Provided by IHS under license with IEC
No reproduction or networking permitted without license from IHS Not for Resale

f) a reference receiver for PSK, APSK, QAM or OFDM formats is available as described in Figure 32, where appropriate interfaces are indicated;

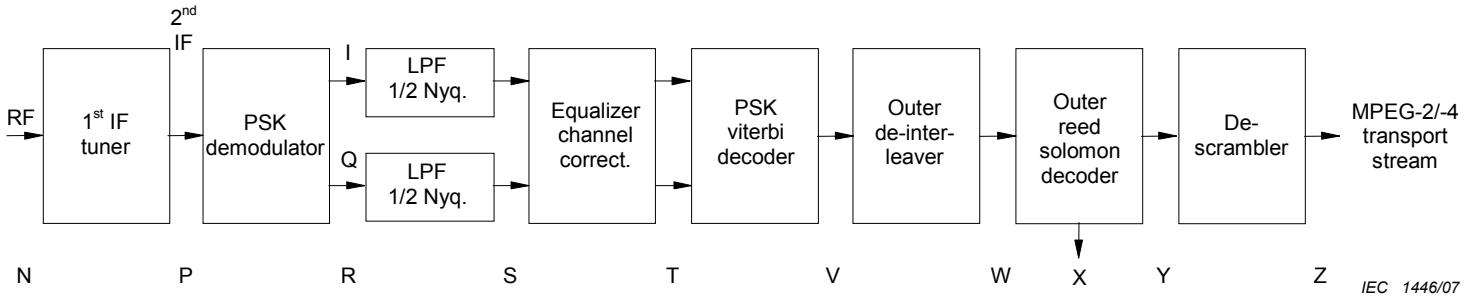

Figure 32a1 – PSK demodulation (QPSK, BPSK or TC8PSK)

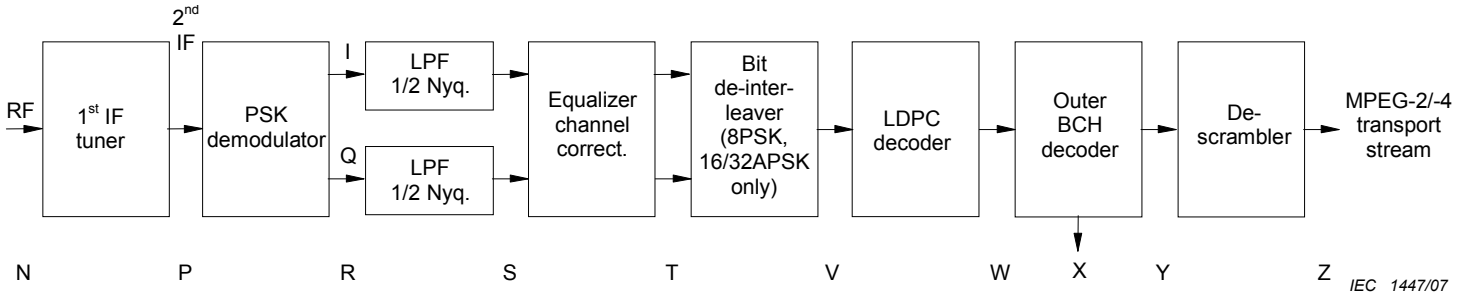

Figure 32a2 – DVB-S2 demodulation (QPSK, 8PSK, 16APSK, 32APSK)

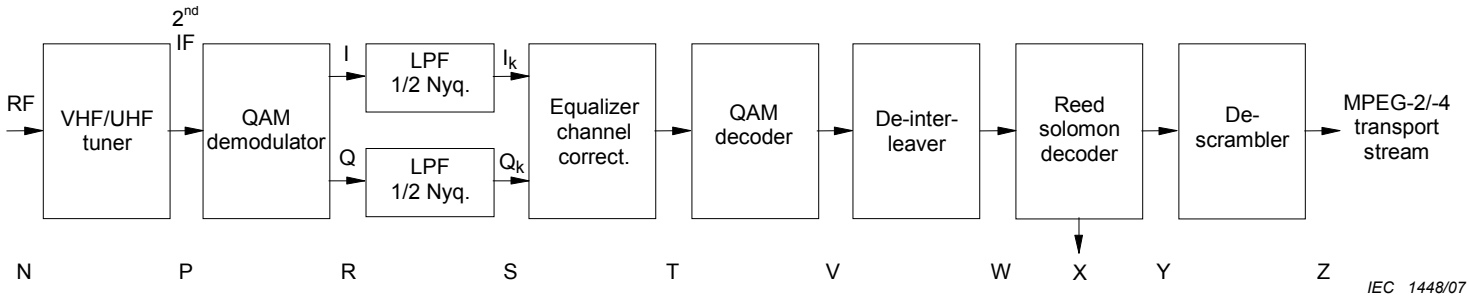

Figure 32b – QAM demodulation

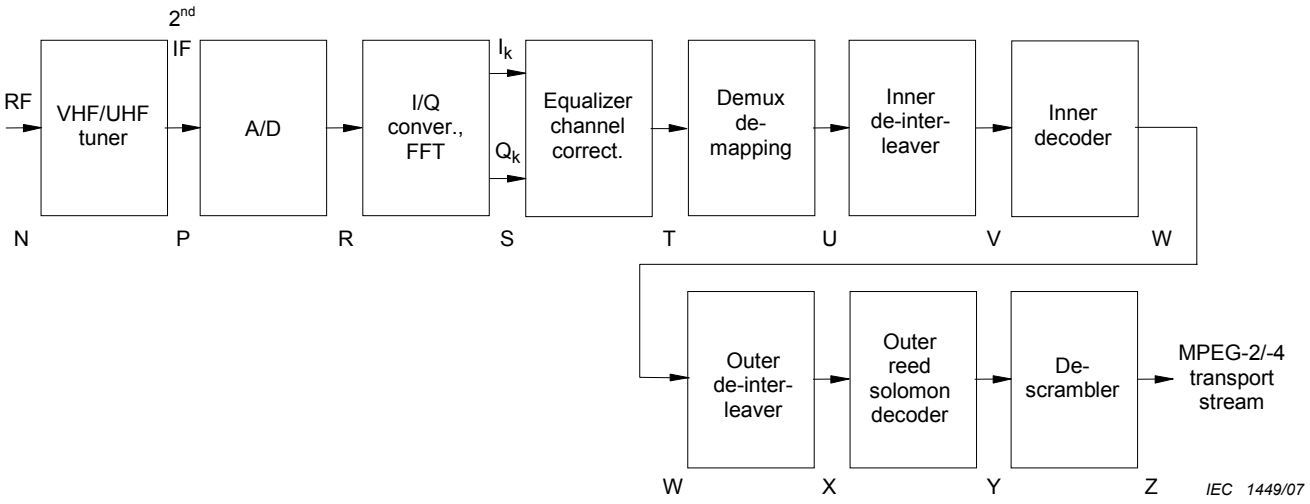

Figure 32c – OFDM demodulation

NOTE The frequency range of the bands for the 1st IF and for VHF/UHF tuners depends on the frequency allocation plan of each country. Examples are given below:

1st IF: 0,95 GHz to 2,15 GHz VHF/UHF: 47 MHz to 862 MHz (Europe)
90 MHz to 770 MHz (Japan)

Figure 32 – Reference receiver

--`,,```,,,,````-`-`,,`,,`,`,,`---

Copyright International Electrotechnical Commission
Provided by IHS under license with IEC
No reproduction or networking permitted without license from IHS Not for Resale

g) the decoder implementation will not affect the consistency of the results. The MPEG-2 T-STD model constrains, as defined in ISO/IEC 13818-1 (MPEG-2 system), shall be satisfied as specified in ISO/IEC 13818-4 (MPEG-2 compliance testing).

4.11.3 Signal level for digitally modulated signals

4.11.3.1 Introduction

The level of a digitally modulated signal is given by the RMS power of the signal within the equivalent noise bandwidth and can be expressed in dB(mW) or in dB(μV) referred to 75 Ω

This measuring method applies to the measurement of the level of digitally modulated signals using PSK (ETSI EN 300 421) PSK, APSK (ETSI EN 302 307), QAM (ETSI EN 300 429, ETSI EN 300 473) and COFDM (ETSI EN 300 744) formats. This method of measurement can also be used for DAB and NICAM signals.

Because the modulated signal is similar in characteristics to white noise in the frequency domain, the measurement is based on the use of a suitable spectrum analyser, able to tune the frequency range of the channel and to display the whole bandwidth, to measure spectral power density. The result may be expressed as dB(mW/Hz). The signal level in dB(mW) or in dB(μV) can be calculated if the bandwidth is known.

NOTE Also a vector signal analyser can be used or a suitable measuring set designed and calibrated for signal level measurement of digitally modulated signals.

The measurement can be performed at the system outlet, at the output of a distribution equipment (passive or active), at the output of the headend or at the output of an outdoor unit (SHF receiver) for satellite reception.

4.11.3.2 Equipment required

The equipment required is a spectrum analyser having a known noise bandwidth and a calibrated display of the tuned signal. The calibration accuracy should be preferably within ±0,5 dB and shall be stated with the results.

The equipment shall be able to tune to the nominal frequency range of the system.

4.11.3.3 Connection of the equipment

Connect the measuring equipment to the system outlet or to the point where the measurement shall be performed, using suitable cable and connectors, taking care to maintain correct impedance matching.

4.11.3.4 Measurement procedure

a) When signal levels are to be measured where a high ambient electromagnetic field is present, the measuring equipment shall be checked for spurious readings. Connect a shielded termination to its input cable, place both the meter and the lead approximately in their measuring positions and check that there is a negligible reading at the frequency(ies) and on the meter ranges to be used.

b) Tune the spectrum analyser on the channel that shall be measured (selecting the centre frequency of the spectrum analyser) and select the span and level settings to show the whole channel whose bandwidth depends on the type of modulation used; Examples of the equivalent signal bandwidth BW for digitally modulated signals are indicated in Annex H.

c) Set the resolution bandwidth RSBW of the spectrum analyser to 100 kHz and set the video bandwidth to 100 Hz or lower to obtain a smooth display.

Copyright International Electrotechnical Commission
Provided by IHS under license with IEC
No reproduction or networking permitted without license from IHS Not for Resale

d) Measure the level *S* of the flat top of the displayed signal in dB(μV) or in dB(mW) using the display line cursor if this feature is available.

NOTE 1 If the spectrum of the signal does not have a flat top, due to echoes, measure the signal level at the centre frequency of the channel.

NOTE 2 If the spectrum analyser has the possibility of measuring direct the true RMS power within the channel bandwidth, this measured level *S* should be used.

e) Measure on the displayed channel the two frequencies at which the level is 3 dB lower than the maximum level *S*; the difference between these two frequencies is assumed to be the equivalent signal bandwidth *BW* expressed in Hz.

f) Calculate the level $S_{D,RF}$ of the signal using the following formula:

$$S_{D,RF} = S + 10 \lg \left[\frac{BW}{RSBW} \right] + K_{sa}$$

where

$S_{D,RF}$ is the signal level in dB(μV) or in dB(mW);

S is the flat top signal level in dB(μV) or in dB(mW);

BW is the equivalent signal bandwidth of the channel in Hz (Annex H);

RSBW is the resolution bandwidth of the spectrum analyser in Hz;

K_{sa} is the correction factor of the spectrum analyser in dB.

The correction factor K_{sa} depends on the measuring equipment used and shall be provided by the manufacturer of the measuring equipment or obtained by calibration. The value of the correction factor for a typical spectrum analyser is about 1,7 dB (see Annex I).

The correction factor is not necessary if the measuring equipment can be set to display the level in dB(mW/Hz) units. In this case, the level $S_{D,RF}$ of the signal can be obtained from the measured maximum level *S* using the following formula, where *BW* shall be expressed in Hz:

$$S_{D,RF} = S + 10 \lg (BW)$$

NOTE This measuring method actually measures the *S* + *N* level. The contribution of noise is considered negligible if the level of noise displayed outside the equivalent signal band is at least 15 dB lower than the maximum level displayed within the equivalent signal band. This noise level includes that of the measuring equipment (spectrum analyser) which should be at least 10 dB lower than the noise level displayed outside the channel band in order not to affect the results. Otherwise, the contribution of noise (due to the system or the equipment under test and to the measuring equipment) should be taken into account in the measurement of signal level *S* (see Annex F).

4.11.3.5 Presentation of the results

The measured level is expressed in dB(μV) or dB(mW) with reference to the bandwidth *BW* and referred to 75 Ω or in dB(mW/Hz). The accuracy of the measuring equipment shall be stated with the results.

4.11.4 RF signal-to-noise ratio $S_{D,RF}/N$ for digitally modulated signals

4.11.4.1 Introduction

This measuring method applies to the measurement of the RF signal-to-noise ratio $S_{D,RF}/N$ of digitally modulated signals using PSK, APSK, QAM, OFDM formats.

Because the modulated signal is similar to noise distributed in the bandwidth of the channel, the measurement is based on the use of a suitable spectrum analyser, able to tune the frequency range of the channel and to display the whole bandwidth, to measure spectral power densities of both the signal and the noise.

--`,,```,,,,````-`-`,,`,,`,`,,`---
Copyright International Electrotechnical Commission
Provided by IHS under license with IEC
No reproduction or networking permitted without license from IHS Not for Resale

NOTE A vector signal analyser can also be used.

The measurement can be performed at the system outlet, at the output of a distribution equipment (passive or active), at the output of the headend or at the output of an outdoor unit (SHF receiver) for satellite reception.

4.11.4.2 Equipment required

The equipment required is a spectrum analyser having a calibrated display of the tuned signal.

The equipment shall be able to tune the nominal frequency range of the system under test.

4.11.4.3 Connection of the equipment

Connect the measuring equipment to the system outlet or to the point where the measurement shall be performed, using suitable cable and connectors, taking care to maintain correct impedance matching.

4.11.4.4 Measurement procedure

a) Tune the spectrum analyser on the channel that shall be measured (selecting the centre frequency of the spectrum analyser) and select the span and level settings to show the whole channel whose bandwidth depends on the type of modulation used. In Table 5 of Annex H are indicated examples of the equivalent signal bandwidth (*BW*) for digitally modulated signals.

b) Set the resolution bandwidth of the spectrum analyser to 100 kHz and the video bandwidth low enough to obtain a smooth display (100 Hz, if available). If a different setting is used, this shall be the same when measuring the signal level and the noise level.

c) Measure the maximum level *S* of the flat top of the displayed signal in dB(μV) or in dB(mW) using the display line cursor if this feature is available.

NOTE If the spectrum of the signal is not flat, due to echoes, measure the signal level at the centre frequency of the channel.

d) Switch off the channel at the input of the system or at the input of the device under test, terminating the input port with a matched impedance (or depointing the antenna, if the measurement is performed at the output of an outdoor unit for satellite reception) and measure the noise level *N* in the same units as the signal level (in dB(μV) or in dB(mW) or in dB(mW/Hz)).

NOTE When switching off the input signal, all equipment with built-in AGC will show a different behaviour. In this case, the noise level should be measured in-between the channels.

e) Calculate the signal to noise ratio $S_{D,RF}$ /*N* by the following formula:

$$S_{D,RF} / N = S - N$$

where

$S_{D,RF}$ /*N* is the signal-to-noise ratio in dB;

S is the signal level in dB(μV), in dB(mW) or in dB(mW/Hz);

N is the noise level in dB(μV), in dB(mW) or in dB(mW/Hz)..

NOTE This method of measurement actually measures the (*S* + *N*)/*N* ratio. The measuring equipment (spectrum analyser) should have a noise level at least 10 dB lower than the noise level displayed outside the channel band in order not to affect the results. Otherwise, the contribution of the measuring equipment noise in the measurement of the noise level (*N*) should be taken into account (see Clause F.2).

4.11.4.5 Presentation of the results

The measured signal-to-noise ratio $S_{D,RF}/N$ shall be expressed in dB.

Copyright International Electrotechnical Commission
Provided by IHS under license with IEC
No reproduction or networking permitted without license from IHS Not for Resale

4.11.5 Bit error ratio (BER)

4.11.5.1 Introduction

This method of measurement applies to the measurement of bit error ratio (BER) of digitally modulated signals using PSK, APSK, QAM, OFDM formats. BER is the primary parameter, which describes the quality of the digital transmission link.

The bit error ratio is defined as the ratio between erroneous bits and the total number of transmitted bits.

If *BER* before Reed Solomon is ranging from 10^{-2} to 10^{-4} the measurement can be made in a reasonable amount of time. Above a *BER* of 10^{-2}, the result is assumed to be inaccurate.

The measurement is performed at the system outlet of a cable network or at other points of interest in the system.

NOTE For in-service measurement of BER, see ETSI TR 101 290.

4.11.5.2 Equipment required

The equipment required is listed below:

a) reference receiver (Figure 32) with good equaliser (influence of linear distortion of the cable network to the BER measurement should be negligible);

b) BER counter connected at the appropriate interface (V or U in Figure 32) of the reference receiver, depending where BER shall be evaluated. If it is connected after the Reed-Solomon decoder (interface Y or Z in Figure 32), decoding should be deactivated in order to reduce the duration of the measurement.

4.11.5.3 Connection of the equipment

The measuring set-up for BER measurement is shown in Figure 33. The measuring equipment shall be connected taking care to maintain correct impedance matching and suitable cables and connectors.

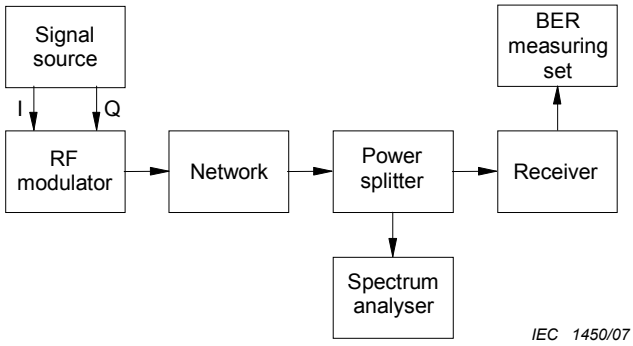

Figure 33 – Test set-up for BER measurement

4.11.5.4 Measurement procedure

a) Tune the receiver on the channel to be tested.

b) Measure the *BER* counting the error bits for a sufficient long time to count at least 100 error bits and refer this number to the total number of transmitted bits in that time.

Copyright International Electrotechnical Commission
Provided by IHS under license with IEC
No reproduction or networking permitted without license from IHS Not for Resale

4.11.5.5 Presentation of the results

The measured *BER* is indicated with reference to the channel tuned. The point where the measurement of *BER* has been performed shall be indicated with the results.

4.11.6 *BER* versus E_b/N_0 or *C/N*

4.11.6.1 Introduction

This measuring method applies to the measurement of bit error ratio (BER) of digitally modulated signals using PSK, APSK, QAM, OFDM formats. The measurement of *BER* versus E_b/N_0 or *C/N* enables a graph to be drawn which shows the implementation loss of the system over a range of bit error ratios. The residual *BER* at high E_b/N_0 or *C/N* values is an indicator of possible network problems. The *BER* range of interest is 10^{-7} to 10^{-3}.

The measurement is performed at the system outlet of a cable network, while the modulated signal with the appropriate format is applied at the input of the headend or at the input of the network, depending which part of the system is to be measured.

The headend can include modulation converters (from PSK to QAM format).

The measured values of *C/N* are equivalent to the $S_{D,RF}/N$ values, to which are applicable the performance requirements given in 5.8.

NOTE This measuring method should be performed under out of service conditions.

4.11.6.2 Equipment required

The equipment required is listed below:

a) I/Q baseband signal source for PSK, APSK, QAM, OFDM modulation format (Figure 31);
b) RF modulator for PSK, APSK, QAM, OFDM modulation format (Figure 31);
c) noise source;
d) adjustable attenuator;
e) power combiner;
f) power splitter;
g) spectrum analyser able to tune the nominal frequency range of the system;
h) reference receiver (Figure 32) with good equaliser (influence of linear distortion of the cable network to the BER measurement should be negligible);
i) BER counter connected at the appropriate interface (V or U in Figure 32) of the reference receiver, depending where *BER* shall be evaluated. If it is connected after the Reed-Solomon decoder (interface Y or Z), decoding should be deactivated in order to reduce the duration of the measurement.

4.11.6.3 Connection of the equipment

The measuring set-up for *BER* versus E_b/N_0 or *C/N* measurement is shown in Figure 34.

Copyright International Electrotechnical Commission
Provided by IHS under license with IEC
No reproduction or networking permitted without license from IHS Not for Resale

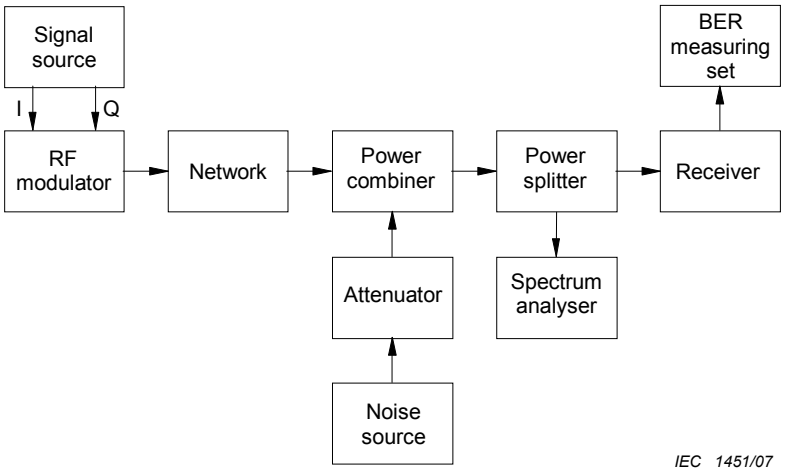

Figure 34 – Test set-up for BER measurement versus E_b/N_0 or *C/N* and noise margin measurement

The measuring equipment shall be connected taking care to maintain correct impedance matching and using suitable cables and connectors.

4.11.6.4 Measurement procedure

a) Set the signal source (base band) to generate a sequence defined as the null transport stream packet in ISO/IEC 13818-1 with all bytes set to 0x00 (see Annex G); A sequence of four bytes followed by a PRBS can also be used.

NOTE The null transport stream packet is defined as the four-byte sequence 0x47, 0x1F, 0xFF, 0x10, followed by 184 zero bytes (0x00). This sequence can be available as an encoding system option.

b) Apply the signal source I and Q channels at the input of the RF modulator to obtain the desired PSK, APSK, QAM, or OFDM modulation format.

c) Set the carrier frequency of the RF modulator to that of the channel where the measurement shall be performed.

d) Adjust the output carrier level of the RF modulator to obtain the same level at the system outlet as in normal operating conditions, so that non-linear distortions (i.e. CSO, CTB) have no impact on BER measurement.

e) Tune the receiver and the spectrum analyser on the same channel; Select the centre frequency of the spectrum analyser, the span and level settings to show the whole channel.

f) Set the resolution bandwidth *RSBW* of the spectrum analyser to 100 kHz and the video bandwidth to 100 Hz or lower to obtain a smooth display.

g) With the noise generator switched-off, measure the *BER* at the receiver output.

h) Switch-off the modulation and measure the carrier level *C* in dB(μV) or in dB(mW).

NOTE In the case of QAM modulated signals, the carrier level *C* is assumed to be that measured according to 4.10.3, because the carrier level upon switching off the modulation does not coincide with the carrier peak level.

i) Measure the noise level *N* beside the carrier ($\Delta f \geq 0{,}5$ MHz) in the same units as the carrier level (in dB(μV) or in dB(mW)).

NOTE Attention should be paid to the amplitude response of the noise spectrum within the channel. If it is not white Gaussian spectrum (flat amplitude response), care should be taken not to measure at maximum or minimum frequency points, but at the frequency points where the energy of noise reaches its average.

j) Calculate the carrier-to-noise ratio *C*/*N* by the following formula:

--`,,```,,,,````-`-`,,`,,`,`,,`---
Copyright International Electrotechnical Commission
Provided by IHS under license with IEC
No reproduction or networking permitted without license from IHS Not for Resale

$$C/N = C - N - 10 \lg (BW/RSBW) - K_{sa} \quad \text{dB}$$

where

C/N is the carrier-to-noise ratio in dB;

C is the carrier level in dB(μV) or in dB(mW);

N is the noise level in dB(μV) or in dB(mW);

BW is the equivalent signal bandwidth of the channel in Hz (Annex H);

$RSBW$ is the resolution bandwidth of the spectrum analyser in Hz;

K_{sa} is the correction factor of the spectrum analyser in dB.

The correction factor K_{sa} depends on the measuring equipment used and shall be provided by the manufacturer of the measuring equipment or obtained by calibration. The value of the correction factor for a typical spectrum analyser is about 1,7 dB (see Annex I).

The correction factor is not necessary if the measuring equipment can be set to display the noise level in dB(mW/Hz) units. In this case, the C/N ratio can be obtained from the following formula:

$$C/N = C - N - 10 \lg (BW) \quad \text{dB}$$

k) Calculate the E_b/N_0 from the following formula:

$$E_b/N_0 = C/N + 10 \lg(BW_{Noise}) - 10 \lg(f_s) - 10 \lg m \quad \text{dB}$$

where

BW_{Noise} is the noise bandwidth of the channel in MHz (Annex H);

f_s is the symbol rate in MSPS (MegaSymbol/s);

m is the number of bits per symbol

- m = 1 for BPSK,
- m = 2 for QPSK and TC8PSK,
- m = 4 for 16 QAM and 16APSK,
- m = 5 for 32APSK,
- m = 6 for 64 QAM,
- m = 8 for 256 QAM

modulating the carrier (PSK, APSK or QAM,) or each pilot carrier (OFDM).

l) Switch on the modulation and the noise generator, add noise changing the attenuator setting and measure again the *BER* at the receiver output and the E_b/N_0 at the input of the receiver. Repeat this step several times to obtain the plot of *BER* versus E_b/N_0.

NOTE 1 When measuring a QAM modulated signal, the E_b/N_0 value referred to the net bit rate can be calculated using the RS rate, i.e. using the following conversion factor for RS(204, 188) code:

10 lg (204/188) = +0,35 dB

NOTE 2 When measuring a PSK or an OFDM modulated signal, the E_b/N_0 value referred to the net bit rate value can be calculated taking into account both the inner code rate and the RS rate. If the inner code rate is ¾, the conversion factor can be calculated as follows:

10 lg (4/3)(204/188) = +1,6 dB

4.11.6.5 Presentation of the results

The measured *BER* is plotted versus E_b/N_0 (dB) or *C/N* (dB). An example of measurement of *BER* versus E_b/N_0 is shown in Figure 35 and versus *C/N* in Figure 36. The interface point where the measurement of *BER* has been performed shall be indicated with the results.

Copyright International Electrotechnical Commission
Provided by IHS under license with IEC
No reproduction or networking permitted without license from IHS Not for Resale

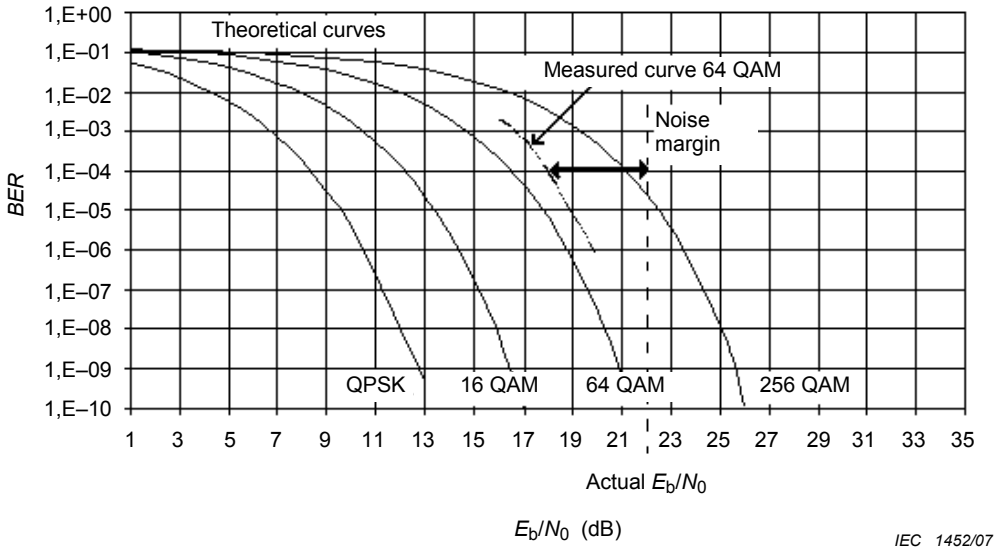

Figure 35 – Example of *BER* measurement versus E_b/N_0

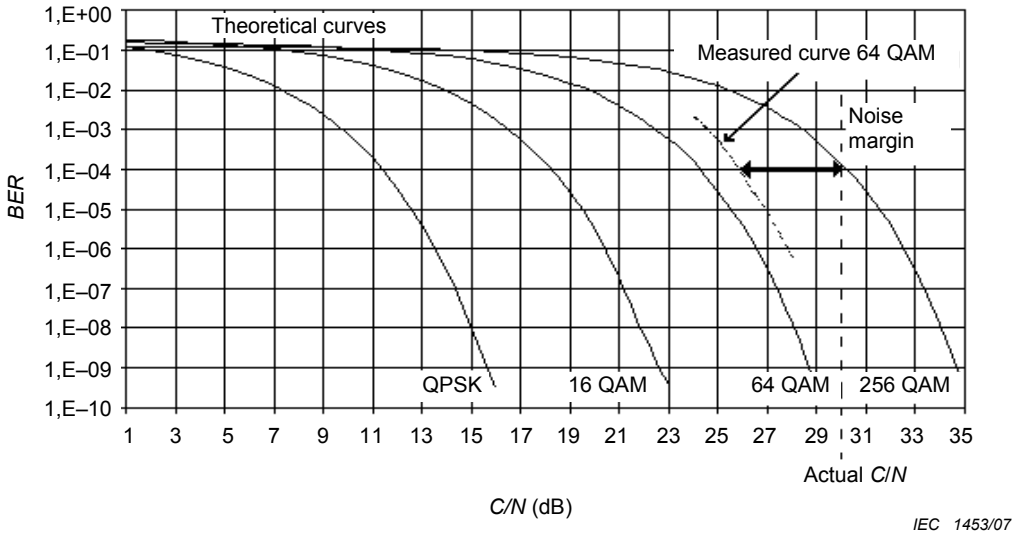

Fgure 36 – Example of *BER* measurement versus *C/N*

4.11.7 Noise margin

4.11.7.1 Introduction

This measuring method applies to the measurement of noise margin of digitally modulated signals using PSK, APSK, QAM or OFDM formats.

The purpose of this measuring method is to provide an indication of the reliability of the transmission channel. The noise margin measurement is a more useful measure of system operating margin than a direct BER (bit error ratio) measurement due to the steepness of the BER curve versus E_b/N_0 ratio.

The measurement is performed at the system outlet of a cable network, while the modulated signal with the appropriate format is applied at the input of the headend or at the input of the network, depending which part of the system is to be measured.

Copyright International Electrotechnical Commission
Provided by IHS under license with IEC
No reproduction or networking permitted without license from IHS Not for Resale

The headend can include modulation converters (from PSK or OFDM to QAM format).

NOTE This measuring method should be performed under out-of-service conditions.

4.11.7.2 Equipment required

The equipment required is listed below:

a) I/Q baseband signal source for PSK, APSK, QAM or OFDM modulation format (Figure 31);
b) RF modulator for PSK, APSK, QAM or OFDM modulation format (Figure 31);
c) noise source;
d) adjustable attenuator;
e) power combiner;
f) power splitter;
g) spectrum analyser able to tune the nominal frequency range of the system;
h) reference receiver (Figure 32) with good equaliser (influence of linear distortion of the cable network to the BER measurement should be negligible);
i) BER counter connected at the appropriate interface (U or V in Figure 30) of the reference receiver, depending where *BER* shall be evaluated. If it is connected after the Reed-Solomon decoder (interface Y or Z in Figure 30), decoding should be deactivated in order to reduce the duration of the measurement.

4.11.7.3 Connection of the equipment

The measuring set-up for noise margin measurement is the same as that for the measurement of *BER* versus E_b/N_0 and is shown in Figure 34.

The measuring equipment shall be connected taking care to maintain correct impedance matching and using suitable cables and connectors.

4.11.7.4 Measurement procedure

a) Set the signal source (base band) to generate a sequence defined as the null transport stream packet in ISO/IEC 13818-1 with all bytes set to 0x00 (see Annex G); A sequence of four bytes followed by a PRBS can also be used.

NOTE The null transport stream packet is defined as the four-byte sequence 0x47, 0x1F, 0xFF, 0x10, followed by 184 zero bytes (0x00). This sequence can be available as an encoding system option.

b) Apply the signal source I and Q channels at the modulator to obtain the desired PSK, APSK, QAM or OFDM modulation format.

c) Set the carrier frequency of the RF modulator to that of the channel where the measurement shall be performed.

d) Adjust the output carrier level of the RF modulator to obtain the same level at the system outlet as in normal operating conditions, so that non-linear distortions (i.e. CSO, CTB) have no impact to BER measurement.

e) Tune the receiver and the spectrum analyser to the same channel; Select the centre frequency of the spectrum analyser, the span and level settings to show the whole channel.

f) Add noise to the modulated signal at the cable network output until *BER* is 10^{-4}.

Copyright International Electrotechnical Commission
Provided by IHS under license with IEC
No reproduction or networking permitted without license from IHS Not for Resale

g) Switch-off the modulation and measure the noise level N_1 (dB(mW)) beside the carrier ($\Delta f \geq 0{,}5$ MHz).

NOTE Attention should be paid to the amplitude response of the noise spectrum within the channel. If it is not white noise spectrum (flat amplitude response), care should be taken not to measure at maximum or minimum frequency points, but at the frequency points where the energy of noise reaches its average.

h) Switch-off the noise source and measure the noise level N_2 (dB(mW)) beside the carrier.

i) Calculate the noise margin *NM* by the following formula:

$$NM = N_1 - N_2 \quad \text{in dB.}$$

4.11.7.5 Presentation of the results

The measured noise margin shall be expressed in dB. An example of measurement of noise margin is shown in Figure 35 where *BER* versus E_b/N_0 is plotted. A second example of measurement of noise margin is shown in Figure 36 where *BER* versus *C/N* is plotted. The interface point where the measurement of *BER* has been performed shall be indicated with the results.

4.11.8 Modulation error ratio (MER)

4.11.8.1 Introduction

This measuring method is able to provide a single "figure-of-merit" analysis of the received signal. This figure is computed to include the total signal degradation likely to be present at the input of a commercial receiver's decision circuits and so give an indication of the ability of that receiver to correctly decode the signal.

The measurement is performed at the system outlet of a cable network, while the modulated signal with the appropriate format is applied at the input of the headend or at the downstream input of the network, depending which part of the system is to be measured.

The headend can include modulation converters (from PSK or OFDM to QAM format).

NOTE This measuring method shall be performed under out-of-service conditions.

4.11.8.2 Equipment required

The equipment required is listed below:

a) I/Q baseband signal source for PSK, APSK or QAM modulation format (Figure 31);
b) RF modulator for PSK, APSK or QAM modulation format (Figure 31);
c) reference receiver (Figure 32);
d) constellation analyser.

4.11.8.3 Connection of the equipment

The measuring set-up for the modulation error ratio (MER) measurement is shown in Figure 37.

Copyright International Electrotechnical Commission
Provided by IHS under license with IEC
No reproduction or networking permitted without license from IHS Not for Resale

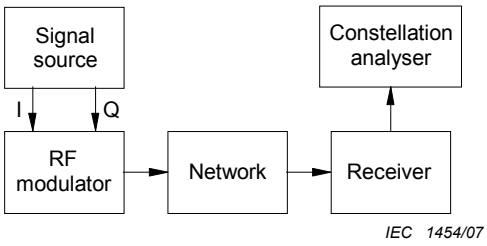

Figure 37 – Test set-up for modulation error ratio (MER) measurement and phase jitter measurement

The measuring equipment shall be connected taking care to maintain correct impedance matching.

4.11.8.4 Measurement procedure

a) Set the signal source (base band) to generate a sequence defined as the null transport stream packet in ISO/IEC 13818-1 with all bytes set to 0x00 (see Annex G); A sequence of four bytes followed by a PRBS can also be used.

NOTE The null transport stream packet is defined as the four-byte sequence 0x47, 0x1F, 0xFF, 0x10, followed by 184 zero bytes (0x00). This sequence can be available as an encoding system option.

b) Apply the signal source *I* and *Q* channels at the input of the modulator to obtain the desired PSK, APSK or QAM modulation format.

c) Set the carrier frequency of the RF modulator to that of the channel where the measurement shall be performed.

d) Adjust the output carrier level of the RF modulator to obtain the same level at the system outlet as in normal operating conditions.

e) Tune the receiver to the channel where the measurement shall be performed; The measurement of the modulation error ratio does not assume the use of an equaliser. However, the measuring receiver may include a commercial quality equaliser to give more accurate results when the signal at the measurement point has linear impairments.

f) Connect the constellation analyser to the appropriate interface (S or T of the reference receiver shown in Figure 32); If the constellation analyser has its own tuner, the use of the reference receiver can be avoided.

g) The carrier frequency and symbol timing are recovered, which removes frequency error and phase rotation. Origin offset (for example, caused by a residual carrier or DC offset), quadrature error and amplitude imbalance are not corrected.

h) A time record of N received symbol coordinate pairs (I_j, Q_j) is captured by the constellation analyser. N shall be significantly larger than the M symbol points.

i) For each received symbol a decision is made as to which symbol was transmitted. The error vector is defined as the distance from the ideal position of the chosen symbol (the centre of the decision box) to the actual position of the received symbol.

j) The distance can be expressed as a vector (δI_j, δQ_j).

An example of representation of the constellation diagram for a 64 QAM modulation format and the distance (δI_j, δQ_j) for each of the N received symbols in the jth point from the ideal position (I_j, Q_j) is shown in Figure 38.

--`,,```,,,,````-`-`,,`,,`,`,,`---

Copyright International Electrotechnical Commission
Provided by IHS under license with IEC
No reproduction or networking permitted without license from IHS Not for Resale

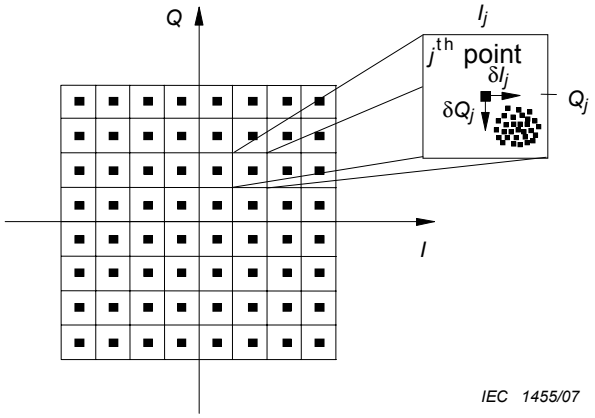

NOTE The jth point has been enlarged to show the coordinates of the symbol error vector.

Figure 38 – Example of constellation diagram for a 64 QAM modulation format

The sum of the squares of the magnitudes of the ideal symbol vectors is divided by the sum of the squares of the magnitude of the symbol error vectors. The result, expressed as a power ratio in dB, is defined as the modulation error ratio (*MER*).

$$MER = 10 \lg \left\{ \frac{\sum_{j=1}^{N} \left(I_j^2 + Q_j^2 \right)}{\sum_{j=1}^{N} \left(\delta I_j^2 + \delta Q_j^2 \right)} \right\} \text{ in dB}$$

NOTE Before starting the measurement, check the modulator performance, connecting the receiver with the constellation analyser at the output of the signal generator modulated by the digital source. The displayed constellation diagram should be noted and assumed as the reference position for the measurement.

4.11.8.5 Presentation of the results

The measured modulation error ratio (*MER*) shall be expressed in dB. The interface of the receiver where the measurement has been performed shall be stated with the results.

4.11.9 Phase jitter

4.11.9.1 Introduction

This measuring method is able to provide an indication of the phase or frequency fluctuations of an oscillator used in an equipment of the cable network (i.e., in a frequency converter). Using such an oscillator with digitally modulated signals may result in a sampling uncertainty in the receiver, because the carrier regeneration cannot follow the phase fluctuations.

The measurement is performed at the system outlet of a cable network, while the modulated signal with the appropriate format is applied at the input of the headend or at the downstream input of the network, depending which part of the system is to be measured.

The headend can include modulation converters (from PSK, APSK or OFDM to QAM format).

NOTE This measuring method should be performed under out-of-service conditions.

4.11.9.2 Equipment required

The equipment required is listed below:

Copyright International Electrotechnical Commission
Provided by IHS under license with IEC
No reproduction or networking permitted without license from IHS Not for Resale

a) I/Q baseband signal source for PSK, APSK or QAM modulation format (Figure 31);

b) RF modulator for PSK, APSK or QAM modulation format (Figure 31);

c) reference receiver (Figure 32);

d) constellation analyser.

4.11.9.3 Connection of the equipment

The measuring set-up for the phase jitter measurement is shown in Figure 37.

The measuring equipment shall be connected taking care to maintain correct impedance matching and using suitable cables and connectors.

4.11.9.4 Measurement procedure

a) Set the signal source (base band) to generate a sequence defined as the null transport stream packet in ISO/IEC 13818-1 with all bytes set to 0x00 (see Annex G); A sequence of four bytes followed by a PRBS can also be used.

NOTE The null transport stream packet is defined as the four-byte sequence 0x47, 0x1F, 0xFF, 0x10, followed by 184 zero bytes (0x00). This sequence can be available as an encoding system option.

b) Apply the signal source I and Q channels at the input of the modulator to obtain the desired PSK, APSK or QAM modulation format;

c) Set the carrier frequency of the RF modulator to that of the channel where the measurement shall be performed;

d) Adjust the output carrier level of the RF modulator to obtain the same level at the system outlet as in normal operating conditions;

e) Tune the receiver to the channel where the measurement shall be performed; The measurement of the phase jitter does not assume the use of an equaliser. However, the measuring receiver may include a commercial quality equaliser to give more accurate results when the signal at the measurement point has linear impairments.

f) Connect the constellation analyser to the appropriate interface (S or T of the reference receiver shown in Figure 32); If the constellation analyser has its own tuner, the use of the reference receiver can be avoided.

g) The carrier frequency and symbol timing are recovered, which removes frequency error and phase rotation but not phase jitter. Origin offset (for example, caused by residual carrier or DC offset), quadrature error and amplitude imbalance are not corrected.

h) A time record of N received symbol coordinate pairs (I_j, Q_j) is captured by the constellation analyser. N shall be significantly larger than the M symbol points.

i) The signal points affected by phase jitter are arranged along a curved line crossing the centre of each decision boundary box as shown in Figure 39 for the four "corner decision boundary boxes".

Copyright International Electrotechnical Commission
Provided by IHS under license with IEC
No reproduction or networking permitted without license from IHS Not for Resale

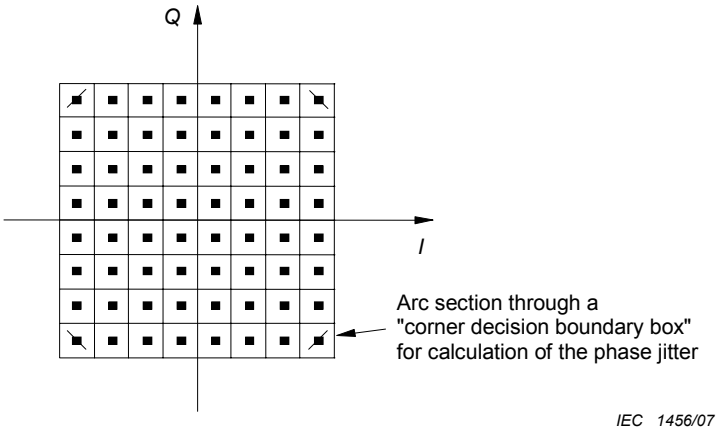

Figure 39 – Example of constellation diagram for a 64 QAM modulation format with arc sections due to phase jitter

j) The phase jitter can be calculated using the following procedure. For each received symbol

- calculate the angle between the I-axis of the constellation diagram and the vector to the received symbol (I_{rcvd}, Q_{rcvd}):

$$\phi_1 = \arctan (Q_{rcvd}/I_{rcvd})$$

- calculate the angle between the I-axis of the constellation diagram and the vector to the corresponding ideal symbol (I_{ideal}, Q_{ideal}):

$$\phi_2 = \arctan (Q_{ideal}/I_{ideal})$$

- calculate the error angle:

$$\phi_E = \phi_1 - \phi_2$$

From these *N* error angles, calculate the RMS value *PJ* of the phase jitter:

$$PJ = \sqrt{(1/N)\sum_{j=1}^{N} \phi_{Ej}^2 - \left(1/N^2\right)\left(\sum_{j=1}^{N} \phi_{Ej}\right)^2}$$

NOTE Before starting the measurement, check the modulator performance, connecting the receiver with the constellation analyser at the output of the signal generator modulated by the digital source. The constellation diagram displayed should be noted and assumed as the reference position for the measurement.

4.11.9.5 Presentation of the results

The measured phase jitter shall be expressed in degrees. The interface of the receiver where the measurement has been performed shall be stated with the results.

4.11.10 Phase noise of an RF carrier

4.11.10.1 Introduction

This measuring method is able to provide an indication of the phase noise of a carrier due to the phase or frequency fluctuations of an oscillator used in an equipment of the cable network (e.g., in a frequency converter).

For PSK, APSK or QAM modulation formats, using such an oscillator with digitally modulated signals may result in a sampling uncertainty in the receiver, because the carrier regeneration cannot follow the phase fluctuations. Phase noise outside the loop bandwidth of the carrier

Copyright International Electrotechnical Commission
Provided by IHS under license with IEC
No reproduction or networking permitted without license from IHS Not for Resale

recovery circuit leads to a circular smearing of the constellation points in the I/Q plane. This reduces the operating margin (noise margin) of the system and may directly increase the *BER*.

In an OFDM system, the phase noise can cause common phase error (CPE), which affects all carriers simultaneously, and which can be corrected by using continual pilots, and inter-carrier interference (ICI) which is noise that cannot be corrected.

The effects of CPE are similar to any single carrier system and the phase noise, outside the loop bandwidth of the carrier recovery circuit, leads to a circular smearing of the constellation points in the I/Q plane. This reduces the operating margin (noise margin) of the system and may directly increase the *BER*.

The effects of ICI are peculiar to OFDM and cannot be corrected for. This has to be taken into account as part of the total noise of the system.

The measurement is performed at the system outlet of a cable network, while an unmodulated carrier is applied at the input of the headend or at the downstream input of the network, depending which part of the system is to be measured.

The headend can include modulation converters (from PSK, APSK to QAM format).

NOTE This measuring method should be performed under out-of-service conditions.

4.11.10.2 Equipment required

The equipment required is listed below:

a) RF signal generator for the frequency bands of input signals at the headend or at the network;

NOTE The phase noise characteristic of the signal generator should be sufficiently lower (at least 10 dB) than that to be measured. If it is not known, a preliminary check should be performed.

b) spectrum analyser able to tune the nominal frequency range of the system.

4.11.10.3 Connection of the equipment

The measuring set-up for the phase noise measurement is shown in Figure 40.

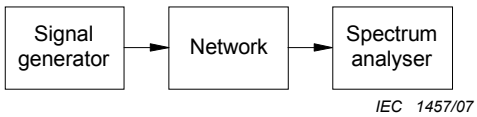

Figure 40 – Test set-up for phase noise measurement

The measuring equipment shall be connected taking care to maintain correct impedance matching and using suitable cables and connectors.

4.11.10.4 Measurement procedure

a) Set the carrier frequency of the RF signal generator to that of the channel where the measurement shall be performed.

Copyright International Electrotechnical Commission
Provided by IHS under license with IEC
No reproduction or networking permitted without license from IHS Not for Resale

b) Adjust the carrier level of the RF signal generator to obtain the same level at the system outlet as in normal operating conditions.

c) Tune the spectrum analyser on the same channel. Select the centre frequency of the spectrum analyser, the span and level settings to show the carrier and its sidebands due to the phase noise.

d) Set the resolution bandwidth *RSBW* of the spectrum analyser to 300 Hz and the video bandwidth to 30 Hz or 10 Hz.

e) Measure the unmodulated carrier level *C* in dB(mW).

f) Measure the level $PN(f_m)$ in dB(mW) of each component in one noise sideband and note its frequency f_m.

g) Convert the measured value of *PN* to one hertz bandwidth, using the following formula:

$$PN_0(f_m) = PN(f_m) - 10 \lg RSBW + K_{sa}$$

where

- *RSBW* is the resolution bandwidth of the spectrum analyser;
- the correction factor (K_{sa}) depends on the measuring equipment used and shall be provided by the manufacturer of the measuring equipment or obtained by calibration. The value of the correction factor for a typical spectrum analyser is about 1,7 dB (see Annex I);
- the correction factor is not necessary if the measuring equipment can be set to display the noise level in dB(mW/Hz) units. In this case, the $PN_0(f_m)$ value is obtained directly.

h) Calculate the phase noise performance of the carrier, defined as the ratio of the measured power in one sideband component, on a per hertz bandwidth spectral density basis, to the total signal power:

$$\alpha(f_m) = PN_0(f_m) - C \quad \text{in dB(Hz}^{-1}\text{)}$$

NOTE For this measurement, it is assumed that contributions from amplitude modulation to the noise spectrum are negligible compared to those from frequency modulation and that the measurement bandwidth (*RSBW*) is much smaller than f_m.

4.11.10.5 Presentation of the results

The measured phase noise PN_0, expressed in dB(Hz^{-1}), shall be plotted versus the frequency distance f_m away from the carrier as indicated in Table 3. An example of measurement results of the level *L* of phase noise is given in Figure 41 and in Figure 42.

Copyright International Electrotechnical Commission
Provided by IHS under license with IEC
No reproduction or networking permitted without license from IHS Not for Resale

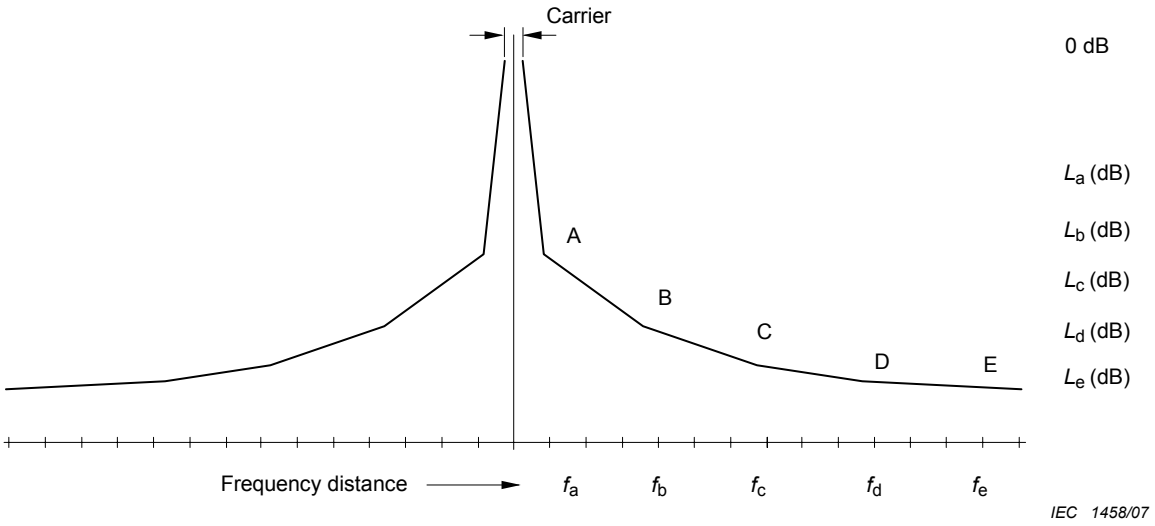

Figure 41 – Example of mask for phase noise measurements: PSK, APSK and QAM formats

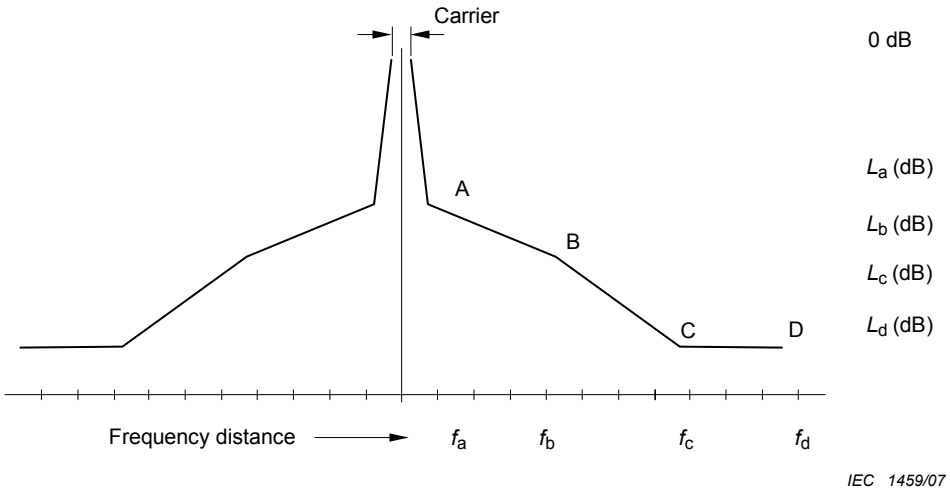

Figure 42 – Example of mask for phase noise measurements: OFDM format

Table 3 – Frequency distance f_m

Modulation format	f_a	f_b	f_c	f_d	f_e
PSK, APSK/QAM	100 Hz	1 kHz	10 kHz	100 kHz	1 000 kHz
OFDM (2 k and 8 k systems)	1 kHz	10 kHz	100 kHz	1 000 kHz	-

5 Performance requirements at system outlet

5.1 General

This clause defines system performance limits which will, with an unimpaired input to the headend or headends, produce picture and sound signals at any system outlet where the impairment to any single parameter will be not worse in normal operating conditions for any

Copyright International Electrotechnical Commission
Provided by IHS under license with IEC
No reproduction or networking permitted without license from IHS Not for Resale

channel than grade four on the five-grade impairment scale contained in ITU-R Recommendation BT.500-11 as given below:

5 – imperceptible;

4 – perceptible but not annoying;

3 – slightly annoying;

2 – annoying;

1 – very annoying.

The system parameters specified are mainly related to analogue frequency division multiplexed FDM signals. When different techniques are used, the overall quality requirements should be met. A supplement with relevant new parameters will be issued later.

The performance limits set out in this clause apply when the methods of measurement given in Clause 4 are employed, and, where appropriate, in the presence of all the signals for which the system was designed. The performance limits shall be met for those specified conditions of temperature, humidity, mains supply voltage and frequency, which apply to the location in which the system is situated.

NOTE 1 If a higher grade than 4 is desired, the figures quoted in Clause 5 should be modified accordingly. For instance for grade 4.5, the figures quoted in 5.8 and 5.9 should be increased by 3 dB; the echo rating in 5.10.2 should be reduced to 3 %.

NOTE 2 If PALplus signals are conveyed in a system at the same level as PAL and SECAM signals, they will have a slightly lower grade than the PAL or SECAM signals.

NOTE 3 Performance requirements that are frequency-dependent are specified up to 2 150 MHz. Requirements for the frequency range 2 150 MHz to 3 000 MHz are under consideration.

For digital signals, the system performance limits ensure a service that is quasi-free of interruption, corresponding to a bit error ratio, before Reed-Solomon error correction, of 10^{-4} in a DVB signal.

When measuring the system parameters at the system outlet (or home network interface) in operation, the limit values indicated below can be exceeded, taking into account the contribution of the signal performance (quality) of each parameter present at the headend input.

EXAMPLE: The carrier-to-noise ratio measured at the system outlet in operation is lower than the values given in Table 10; i.e. for DVB-S or DVB-S2 the carrier-to-noise ratio will be impaired by up to 1 dB in respect to the headend input values given in Table 24.

5.2 Impedance

The nominal impedance of the system shall be 75 Ω. It should be noted that this value applies to all coaxial feeder cable and system outlets and shall be used as the reference impedance for all measurements.

5.3 Requirements at the terminal input

The following requirements apply when a “receiver lead” connects the “system outlet” directly to the “terminal input” (see 3.1.67 and 3.1.90).

5.3.1 Signal level

The signal levels at the system outlet given in Table 4 are reduced by the attenuation of the receiver lead specified in IEC 60966-2-4, IEC 60966-2-5, and IEC 60966-2-6. A receiver lead not longer than 3 m is considered not affecting other quality parameters of the service provided to the terminal.

NOTE In this case the signal level is reduced by approximately 1,5 dB (at 1 000 MHz).

--`,,```,,,,````-`-`,,`,,`,`,,`---

Copyright International Electrotechnical Commission
Provided by IHS under license with IEC
No reproduction or networking permitted without license from IHS Not for Resale

5.3.2 Other parameters

The performance requirements given below at system outlet remain unchanged at the terminal input.

5.4 Carrier levels at system outlets

5.4.1 Minimum and maximum carrier levels

The minimum and maximum carrier levels will depend on many factors including the performance of typical receivers in use and local installation practices. The maximum levels shall not exceed, and the minimum levels shall be not less than, those shown in Table 4.

NOTE For requirements in Japan and the Netherlands, see Clause J.2.

Table 4 – Carrier signal levels at any system outlet

Type of service	Systems	Modulation		Frequency range	Minimum level dB(µV)	Maximum level dB(µV)
Television	PAL, SECAM	AM-VSB		VHF/UHF	60[a]	80[b]
	NTSC	AM-VSB		30 to 300 MHz	57	83
	NTSC	AM-VSB		300 to 1 000 MHz	60	83
	PAL, SECAM	FM		1st IF	47	77
	NTSC	FM		240 to 770 MHz	60	83
	NTSC	FM		1 035 to 1 335 MHz	57	81
	DVB-S	QPSK		1st IF	47	77
	DVB-S2	QPSK, 8PSK,16APSK, 32APSK		1st IF	47	77
	DVB-C	16 QAM		VHF/UHF	41	61
	DVB-C	64 QAM		VHF/UHF	47	67
	DVB-C	256 QAM		VHF/UHF	54	74
	DVB-T COFDM	QPSK	Code rate 1/2 2/3 3/4 5/6 7/8	VHF/UHF	 26 28 30 33 35	 74 74 74 74 74
		16 QAM	Code rate 1/2 2/3 3/4 5/6 7/8		 32 36 39 42 45	 74 74 74 74 74
		64 QAM	Code rate 1/2 2/3 3/4 5/6 7/8		 42 45 48 51 54	 74 74 74 74 74
Sound Radio	Mono	FM		VHF	40	70 see NOTE 1
	Stereo	FM		VHF	50	70 see NOTE 1
	DAB	OFDM		Band III L-Band	28 28	94 84

Copyright International Electrotechnical Commission
Provided by IHS under license with IEC
No reproduction or networking permitted without license from IHS Not for Resale

Table 4 *(continued)*

[a] 57 dB(μV) for systems with 8 MHz spacing only and with a *C/N* of 45,5 dB for system L.

[b] 77 dB(μV) for systems with >20 channels load.

NOTE 1 In order not to overload certain receivers, the figures quoted above for the maximum levels might have to be reduced; for example, by means of a separate attenuator at a specific outlet.

NOTE 2 The level of the television sound carrier relative to that of the vision carrier, which is permissible, varies according to the television system and performance of typical receivers.

NOTE 3 If COFDM channel is adjacent to analogue channel, its level shall be at least 9 dB lower than the video carrier of the analogue channel.

NOTE 4 Other types of modulation are under consideration.

5.4.2 Carrier level differences

The differences in carrier levels shall not exceed the values given in Table 5.

NOTE For requirements in Japan, see Clause J.3.

Table 5 – Maximum level differences at any system outlet between distributed television channels

Systems	Modulation	Frequency range	Maximum level difference dB
PAL, SECAM	AM-VSB	47 MHz to 862 MHz	12
NTSC	AM-VSB	30 MHz to 1 000 MHz	15
NTSC	AM-VSB	30 MHz to 300 MHz	12
PAL, SECAM	AM-VSB	Any 60 MHz range in VHF	6
NTSC	AM-VSB	Any 60 MHz range in VHF	8
PAL, SECAM, NTSC	AM-VSB	Adjacent channel	3
PAL, SECAM	FM	950 MHz to 2 150 MHz	15
NTSC	FM	950 MHz to 2 150 MHz	u.c.
PAL, SECAM	FM	up to 470 MHz	15
NTSC	FM	up to 470 MHz	u.c.
DVB-S	QPSK	950 MHz to 2 150 MHz	u.c.
DVB-S2	QPSK, 8PSK, 16APSK, 32APSK	950 MHz to 2 150 MHz	u.c.
DVB-C	64 QAM	47 MHz to 862 MHz	12
DVB-C	64 QAM	Adjacent channel	3
DVB-C	64 QAM	Adjacent channel to AM-VSB	10 [a]
DVB-C	256 QAM	47 MHz to 862 MHz	12
DVB-C	256 QAM	Adjacent channel	3
DVB-C	256 QAM	Adjacent channel to AM-VSB	6 [a]
DVB-T	COFDM	Adjacent channel	3
DVB-T	COFDM	Adjacent channel to AM-VSB	6

[a] The 64 QAM, 256 QAM and COFDM signals shall be below the level of the adjacent AM signal and reflect the nominal backoff for digital QAM signals.

Copyright International Electrotechnical Commission
Provided by IHS under license with IEC
No reproduction or networking permitted without license from IHS Not for Resale

If FM sound signals are present at the system outlet intended for AM-VSB television signals, the level of any FM carrier shall be at least 3 dB lower than the lowest television signal level at the outlet.

NOTE 1 The difference applies to signals having the same type of modulation.

NOTE 2 The value includes the possible coexistence of signals of 27 MHz bandwidth FM and 7 MHz to 8 MHz bandwidth AM-VSB which may be in the close vicinity. They also take into account the characteristics of the connected customers' receivers (selectivity, image rejection, oscillator radiation). In some cases, it may be necessary, in order to obtain that figure, to incorporate channel by channel processing. The levels of FM satellite channels relative to AM-VSB terrestrial channels should be 0 to –10 dB.

NOTE 3 When equal level FM radio signals are transmitted from the headend, then the maximum difference between these signals at the system outlet should be 6 dB.

5.5 Mutual isolation between system outlets

5.5.1 Isolation between two subscribers

The minimum isolation at any frequency between any two subscribers' system outlets connected separately to a spur feeder system shall be as in Table 6.

NOTE For requirements in Japan, see J.4.

Table 6 – Mutual isolation

Type of service	Frequency range	Mutual isolation dB
TV / TV	47 MHz to 862 MHz (7 MHz channel or mixed 7-8 MHz)	42
TV / TV	47 MHz to 862 MHz (8 MHz channel only)	30
TV / TV	950 MHz to 2 150 MHz	30
FM sound / FM sound	VHF	42
TV / FM sound		50
NOTE 1 For systems carrying channels chosen so that TV local oscillators do not fall within any distributed channels, the figure for mutual isolation may be reduced. NOTE 2 In systems using a return path, the requirement cannot be fulfilled at the lower frequency of 47 MHz but at a convenient higher frequency, depending on the return path band. NOTE 3 The recommended mutual isolation for TV/FM sound is intended between two different system outlets and is applicable only for networks where FM sound is distributed.		

5.5.2 Isolation between individual outlets in one household

The minimum isolation between two individual outlets in one household shall be higher than 22 dB.

NOTE It may be necessary to fulfil the requirements of Table 6 also for one household, if special conditions may require it (e.g. if several TV receivers are operated simultaneously).

5.5.3 Isolation between forward and return path

If system outlets are provided with return path inputs, the minimum isolation between return path input and any FM radio or television (analogue or digital: 64 QAM) output shall give a residual carrier level in the return path frequency range as indicated in Table 7.

--`,,```,,,,````-`-`,,`,,`,`,,`---

Copyright International Electrotechnical Commission
Provided by IHS under license with IEC
No reproduction or networking permitted without license from IHS Not for Resale

Table 7 – Residual carrier level at television or FM radio output within the same outlet or between two different outlets

Return path input Frequency range	Inserted signal level into return path input		Residual carrier level at FM radio output Used frequency range 88 MHz - 108 MHz		Residual carrier level at television output Used frequency range 120 MHz - 300 MHz		Used frequency range 300 MHz - 862 MHz	
	Class A	Class B	Class A	Class B	Class A	Class B	Class A	Class B
MHz	dB(µV)	dB(µV)	dB(µV)	dB(µV)	dB(µV)	dB(µV)	dB(µV)	dB(µV)
10 - 30	<124	<114	<80	<80	<72	<72	<84	<84
30 - 65	<124	<114	u.c.	u.c.	<72	<72	<84	<84

NOTE Some television receivers or set-top boxes require a higher isolation than that given in Table 7. In such cases this can be achieved using suitable filters between the system outlet and the receiver or set-top box.

5.6 Frequency response within a television channel at any system outlet

5.6.1 Amplitude response

The amplitude response variations within any television channel shall not exceed the values given in Table 8.

NOTE For requirements in Japan, see J.5.

Table 8 – Amplitude response variation

Signal modulation	Occupied or channel bandwidth	Maximum variation (peak-to-peak)	Maximum slope of variation
	MHz	dB	dB/MHz
AM-VSB television	6	2	1
	8	2,5	1
FM television	27-36	4	1,5
QPSK (DVB-S)	37,125	8	1,0
QPSK, 8PSK, 16APSK, 32APSK (DVB-S2)	37,125	u.c.	u.c.
TC8PSK (Japan)	34,5	–	–
64 QAM (DVB-C)	8	4*	1,5
64 QAM (Japan)	6	6	u.c.
256 QAM (DVB-C)	8	2	u.c.
COFDM (DVB-T)	8	8	8
OFDM (Japan)	6	6	u.c.

* Cable modems require a tighter amplitude response variation of less than 2,5 dB peak to peak in a 8 MHz channel bandwidth.

5.6.2 Group delay

The group delay variation within any television channel shall not exceed the values given in Table 9.

NOTE For requirements in the Netherlands, see J.6.

Copyright International Electrotechnical Commission
Provided by IHS under license with IEC
No reproduction or networking permitted without license from IHS Not for Resale

Table 9 – Group delay variation

Signal modulation	Frequency range MHz	Maximum group delay variation ns
AM-VSB television (PAL) with teletext	0,5 – 4,43	100
AM-VSB television (PAL) without teletext	0,5 – 4,43	200
QPSK	Signal bandwidth (see H.2.3)	100
OFDM	Signal bandwidth (see H.2.3)	100
QAM	Signal bandwidth (see H.2.3)	100

5.7 Long-term frequency stability of distributed carrier signals at any system outlet

The frequency stability is determined by the headend equipment and the figures given for headend equipment apply.

NOTE For requirements in Japan, see J.7.

At any system outlet, the maximum frequency deviation from the nominal value of the carrier frequency of the channel shall not exceed the values given below.

For AM television the minimum requirements for frequency stability are given in IEC 60728-5.

For FM television the conversion frequency (i.e. the difference between the frequency of an input signal and the output frequency of that signal) shall not deviate by more than ±5 MHz from its nominal value with the following factors taken into account:

a) temperature variations in the range –20 °C to +55 °C;

b) supply voltage variations: as stated by the manufacturer;

c) LO setting error: as stated by the manufacturer;

d) ageing.

The deviation of the conversion frequency from the nominal value due to a) and b) above together shall not exceed ±3 MHz.

For digitally modulated DVB signals the conversion frequency (i.e. the difference between the frequency of an input signal and the output frequency of that signal) shall not deviate from its nominal value by more than the values given in Table 10.

--`,,```,,,,````-`-`,,`,,`,`,,`---

Copyright International Electrotechnical Commission
Provided by IHS under license with IEC
No reproduction or networking permitted without license from IHS Not for Resale

Table 10 – Maximum deviation of conversion frequency for digitally modulated DVB signals

Signal modulation	Conversion frequency deviation kHz
PSK, APSK (DVB-S, DVB-S2)	±1 500
64 QAM (DVB-C)	± 100
256 QAM (DVB-C)	± 100
COFDM (DVB-T)	± 30

5.8 Random noise

At any system outlet, the level of the noise voltage generated in the system (with unimpaired signal at the headend input) in any channel shall be such that the carrier-to-noise ratio shall be not less than the values shown Table 11 and Table 12. The test method for TV carrier-to-noise ratio is given in 4.5. For FM sound radio signals the same method can be used, but in this case, the noise bandwidth is taken to be 200 kHz. The test method for digitally modulated carriers $S_{D,RF}/N$ is given in 4.11.4.

NOTE For requirements in Japan, see J.8.

Table 11 – Carrier-to-noise ratios at system outlet (television)

Systems	Modulation		Minimum carrier-to-noise ratio *C/N* dB	Minimum RF signal-to-noise ratio $S_{D,RF}/N$ dB				Equivalent noise bandwidth *BW* MHz
I B, G, D1 L D, K NTSC M	AM-VSB		44 44 45,5 [a] 44 43 42					5,08 4,75 5,00 5,75 4,00 u.c.
PAL, SECAM	FM		15					27
NTSC	FM		14					
DVB-S	QPSK	Code rate 1/2 2/3 3/4 5/6 7/8		10,9 12,8 13,9 14,9 15,6				Independent of bandwidth
DVB-S2	QPSK 8PSK 16APSK 32APSK [d]	Code rate 1/4 1/3 2/5 1/2 3/5 2/3 3/4 4/5 5/6 8/9 9/10		QPSK 6,0 7,1 8,0 9,3 10,6 11,4 12,3 13,0 13,5 14,5 14,7	8PSK - - - - 13,8 14,9 16,2 - 17,7 19,0 19,3	16APSK - - - - - 17,3 18,5 19,4 19,9 21,2 21,5	32APSK - - - - - - 21,1 22,0 22,6 24,0 24,4	Independent of bandwidth

Copyright International Electrotechnical Commission
Provided by IHS under license with IEC
No reproduction or networking permitted without license from IHS Not for Resale

Table 11 *(continued)*

Systems	Modulation		Minimum carrier-to-noise ratio *C/N* dB	Minimum RF signal-to-noise ratio $S_{D,RF}/N$ dB		Equivalent noise bandwidth *BW* MHz
DVB-C	16 QAM 64 QAM 256 QAM			20 [b] 26 [b] 32 [b]		Independent of bandwidth
DVB-T COFDM	QPSK [c]	Code rate 1/2 2/3 3/4 5/6 7/8		2 k mode 11 14 16 19 22	8 k mode 12 15 17 20 23	Independent of bandwidth
	16 QAM [c]	Code rate 1/2 2/3 3/4 5/6 7/8		2 k mode 17 20 22 25 28	8 k mode 18 21 23 26 28	Independent of bandwidth
	64 QAM [c]	Code rate 1/2 2/3 3/4 5/6 7/8		2 k mode 22 26 28 30 32	8 k mode 23 27 29 31 33	Independent of bandwidth

a For 57 dB(μV) at system outlet; may be reduced to 44 dB if the minimum system outlet level is 60 dB(μV).

b The above values take into account simultaneous distribution of analogue and digital signals. These values assume that intermodulation noise is not present or can be neglected and a *BER* of 10^{-4} before Reed-Solomon decoder is achieved.

c These values take into account white noise and impulse noise.

d These values are calculated according to ETSI EN 302 307 document, Tables 13 and H.1, and are intended for a *PER* of 10^{-7} after LDPC and BCH decoders.

Table 12 – Carrier-to-noise ratios at system outlet (radio)

Systems	Modulation	Minimum carrier-to-noise ratio dB	Equivalent noise bandwidth *BW* MHz
Mono	FM	38 (PAL, SECAM countries) 41 (NTSC countries)	0,2
Stereo	FM	48 (PAL, SECAM countries) 51 (NTSC countries)	0,2

5.9 Interference to television channels

5.9.1 Single-frequency interference

This subclause refers to single-frequency interference, which may result from intermodulation or the presence of other interfering signals (for example, local oscillators, ingress signals).

NOTE For requirements in Japan and the Netherlands, see J.9.

--`,,```,,,,````-`-`,,`,,`,`,,`---
Copyright International Electrotechnical Commission
Provided by IHS under license with IEC
No reproduction or networking permitted without license from IHS Not for Resale

At any system outlet the level of any unwanted signal within the system shall be such that the lowest carrier to interference ratio within a wanted television channel shall be not less than

- 57 dB for AM signals,
- 33 dB for FM signals,
- 35 dB for DVB 64 QAM signals,
- 13 dB for DVB QPSK signals,
- u.c. for DVB 16 QAM, OFDM and 256 QAM signals.

Where a frequency assignment, taking account of known future off-air and distributed channels, is adopted so that interference signals fall only in the less sensitive areas of the television channel spectrum, a limit lower than that given above is acceptable (see curves given in Figure 15 to Figure 18). The test methods are given in 4.5.2.

Single-frequency interference NTSC digital subcarrier:

- not less than 31 dB.

NOTE Special precautions may be needed when the dual sound channel is carried in a lower adjacent channel if interference between the additional subcarrier and the lower vestigial sideband of the adjacent channel is to be avoided.

5.9.2 Single-channel intermodulation interference

In this special case of single-frequency interference, the ratio of the reference level relative to the interference signal shall be not less than 54 dB.

NOTE 1 This subclause does not apply to television channels carrying DVB signals.

NOTE 2 For requirements in Japan, see J.10.

5.9.3 Multiple frequency intermodulation interference

At any system outlet, the level of the multiple frequency intermodulation interference, in any wanted television channel, shall be such that the carrier to interference ratio shall be not less than

- 57 dB for each cluster of composite beats in negative modulation,
- 52 dB for each cluster of composite beats in positive modulation,
- 52 dB for negative modulation and 50 dB for positive modulation for the summed clusters, calculated according to the method of measurement given in 4.5.3,
- 37 dB for the sum of all clusters falling within a DVB 64 QAM channel,
- 13 dB for DVB QPSK,
- u.c. for FM television, DVB OFDM and DVB 256QAM.

NOTE 1 When coherent carriers are used, lower limits are acceptable.

NOTE 2 Because intermodulation products between multiple, closely spaced, digital TV channels are similar to random noise, this intermodulation should be taken into account in the carrier-to-noise measurements.

5.9.4 Intermodulation noise

The intermodulation noise is caused by the non-linearity of devices (for example, amplifiers) if digitally modulated signals are present. Severe intermodulation noise occurs in the “waveform clipping regime” (that is when the instantaneous output voltage due to the sum of the QAM channels exceeds the power supply voltage of active devices) because clipping noise is produced by clipped bursts.

--`,,```,,,,````-`-`,,`,,`,`,,`---

Copyright International Electrotechnical Commission
Provided by IHS under license with IEC
No reproduction or networking permitted without license from IHS Not for Resale

The clipping noise effect is dominant over 3rd and 5th order intermodulation products and is much worse than Gaussian noise because one or several bursts during a symbol time (144 ns for a 64 QAM signal) can be destroyed by nanosecond clipping effects and when the Reed-Solomon burst correction capability is not sufficient to recover this error.

The increment of the intermodulation noise with rising QAM channels level, is in the range of 4 dB to 8 dB, for 1 dB increment of the QAM channels level (usually expressed as 4 dB/dB or 8 dB/dB). This value is much greater than the 2 dB/dB value for 3rd intermodulation products shown by a well-behaved amplifier.

The system shall be operated in such a way that a *BER* of 10^{-4} or better before Reed-Solomon is always achieved at the $S_{D,RF}/N$ given in Table 11.

For this reason a control of the "sum of the carrier voltages" shall be implemented in the headend. In MATV systems, where the received signal level can vary by ±3 dB due to the propagation effects, the amplifiers shall have an appropriate gain control or shall be operated at such a level that the intermodulation noise requirement is never exceeded.

5.9.5 Cross-modulation

Under consideration.

NOTE For requirements in Japan, see J.11.

5.10 Video baseband requirements

5.10.1 Differential gain and phase in any television channel

NOTE This clause does not apply to channels carrying DVB signals.

The differential gain and phase in any television channel shall not exceed the figures given in Table 13.

Table 13 – Differential gain and phase in television channels

Systems	Maximum peak-to-peak differential gain %	Maximum peak-to-peak differential phase Degrees
PAL	10	12
SECAM	40	32
NTSC	10	5

5.10.2 Echoes

The echo rating in any television channel, at any system outlet, when measured by the method defined in 4.6 shall not exceed 7 %.

NOTE For requirements in Japan and the Netherlands, see J.12.

5.10.3 Amplitude and phase response for PALplus signals

Under consideration.

NOTE The recommended test method is to use a sin x/x ITS signal.

5.11 Hum modulation of carriers in television channels

NOTE For requirements in Japan, see J.13.

Copyright International Electrotechnical Commission
Provided by IHS under license with IEC
No reproduction or networking permitted without license from IHS Not for Resale

At any system outlet the unwanted modulation of any vision carrier at the frequency of the supply mains and harmonics thereof shall be such that the reference modulation to hum modulation ratio is not less than 46 dB.

The unwanted modulation of any AM sound carrier shall be such that this ratio is not less than 60 dB.

For system M, the vision carrier ratio of reference modulation to hum modulation shall not be less than 35 dB.

The hum modulation of NTSC digital subcarrier shall be not less than 50 dB.

The test method for both cases is given in 4.5.6.

Hum modulation requirements for FM television and DVB are under consideration.

5.12 Requirements for data signal transmission

5.12.1 Data signals carried in the structure of a television signal

NOTE For requirements in Denmark, see J.14.

5.12.1.1 Data signals carried in the vertical interval of a television signal

5.12.1.1.1 Data echo rating

$$E_d < 10\ \%$$

5.12.1.1.2 Data delay inequality

The data delay inequality in any television channel shall not exceed 50 ns.

5.12.1.2 Data signals using the whole television field

5.12.1.2.1 Data echo rating

$$E_d < 10\ \%$$

5.12.1.2.2 Data delay inequality

The data delay inequality in any television channel shall not exceed 50 ns.

5.12.1.3 Data signals on the audio or additional carriers within a television signal

Under consideration.

5.12.1.4 Data signals using other parts of the television signal

Under consideration.

5.12.2 Data signals other than those carried within the structure of a television signal

Under consideration.

--`,,```,,,,````-`-`,,`,,`,`,,`---
Copyright International Electrotechnical Commission
Provided by IHS under license with IEC
No reproduction or networking permitted without license from IHS Not for Resale

5.13 Digitally modulated signals – Additional performance requirements

5.13.1 DVB (PSK, QAM, OFDM) performance

5.13.1.1 BER

For a service quasi-free of interruption the *BER* for any DVB signal shall be lower than 10^{-4}, before Reed-Solomon error correction.

5.13.1.2 Noise margin

For any DVB signal received by satellite, the noise margin shall be higher than 4 dB.

NOTE For terrestrial reception the noise margin can be reduced to 1 dB if the received signal level is stable within ±1 dB.

5.13.1.3 MER

NOTE This performance recommendation is only for informative purposes.

For any DVB signal the *MER* should be not lower than the value given in Table 14.

Table 14 – Modulation error ratio MER of a DVB signal

Signal modulation	***MER*** dB
DVB-S: QPSK	11
DVB-S2: QPSK,8PSK, 16APSK, 32APSK	u.c.
DVB-C: 16 QAM	20
DVB-C: 64 QAM	26
DVB-C: 256 QAM	32
DVB-T: COFDM	26

5.13.1.4 Phase jitter

NOTE This performance requirement is only for informative purposes.

For any DVB signal the phase jitter shall be lower than the value given in Table 15.

Table 15 – Phase jitter of a DVB signal

Signal modulation	**Phase jitter** degrees
DVB-S: QPSK	±15
DVB-S2: QPSK,8PSK, 16APSK, 32APSK	u.c.
DVB-C: 64 QAM	±5
DVB-C: 256 QAM	u.c.
DVB-T: COFDM	±5

5.13.1.5 Phase noise of an RF carrier

NOTE For requirements in Japan, see J.15.

Copyright International Electrotechnical Commission
Provided by IHS under license with IEC
No reproduction or networking permitted without license from IHS Not for Resale

For any RF carrier of a digitally modulated signal (PSK, APSK or QAM) the phase noise shall be lower than the value given in Table 16 at the frequency distance f_m from the carrier.

Table 16 – Phase noise of a DVB signal (PSK, APSK and QAM)

Signal modulation	Frequency distance f_m	Phase noise dB(Hz^{-1})				
	f_a, f_b, f_c, f_d, f_e ⇒	100 Hz	1 kHz	10 kHz	100 kHz	1 000 kHz
	Symbol rate (MSymbols/s)	L_a	L_b	L_c	L_d	L_e
DVB-S: QPSK	5 to 27,5	–40	–55	–75	–80	–100
DVB-S2: QPSK, 8PSK	5 to 27,5	–40	–55	–75	–80	–100
DVB-C: 16 QAM	>3,5	-	–32	–74	–94	–104
	1,7/3,5	-	–41	–80	–100	–104
DVB-C: 64 QAM	>3,5	-	–38	–80	–100	–110
	1,7/3,5	-	–47	–86	–106	–110
DVB-C: 256 QAM	>3,5	-	–44	–86	–106	–116
	1,7/3,5	-	–53	–92	–112	–116

For a digitally modulated signal in the OFDM format the phase noise can cause CPE which affects all the carriers simultaneously and inter-carrier interference ICI.

For any RF carrier of a DVB signal modulated in the OFDM format, measured with the method of measurement given in 4.10.10, the value of CPE and that of ICI shall be lower than the values L_a, L_b, L_c and L_d given in Table 17 at the frequency distances f_a, f_b, f_c and f_d from the carrier.

Table 17 – Phase noise of a DVB-T signal (COFDM)

Signal modulation	Frequency distance f_m	Phase noise dB(Hz^{-1})			
DVB-T: COFDM	f_a, f_b, f_c, f_d ⇒	1 kHz	10 kHz	100 kHz	1 000 kHz
2 k and 8 k		L_a	L_b	L_c	L_d
		–75	–85	–110	–110

5.13.2 NICAM performance

The performance for NICAM systems is determined largely by the headend equipment and the limits given in IEC 60728-5 apply.

5.13.3 DAB performance

Under consideration.

Copyright International Electrotechnical Commission
Provided by IHS under license with IEC
No reproduction or networking permitted without license from IHS Not for Resale

5.14 FM sound radio – Additional performance requirements

5.14.1 Amplitude response within an FM channel

The amplitude response as a function of frequency for the entire system shall be such that the maximum amplitude variation over any FM channel (bandwidth appropriate for the transmission system in use) is not more than 3 dB with the slope not exceeding 0,3 dB per 10 kHz within 75 kHz of the carrier.

5.14.2 Phase response within an FM channel

Under consideration.

5.14.3 Interference within an FM channel

Under consideration.

NOTE For requirements in the Netherlands, see J.16.

5.14.4 AM hum modulation on FM sound carriers

Hum modulation sidebands shall be at least 46 dB below the carrier level.

5.14.5 Echoes within an FM channel

Under consideration.

6 Performance requirements at receiving antennas

6.1 Introduction

The quality of the signals delivered at system outlets depends not only on the headend signal processing and on the network performance but also on the characteristics of the signals received by the antennas. Therefore appropriate requirements concerning

- field strength at the receiving antennas site;
- quality of received signals;
- safety;
- EMC;

are needed in order to provide at the input of the headend of the cable network both analogue and digital television signals with suitable quality.

The field strength level at the antenna site shall be higher than the minimum values required by

- ITU-R Recommendation BT.417-4 – for analogue television broadcasting;
- ITU-R Recommendation BS.412-9 – for FM sound broadcasting;
- CEPT – The Chester 1997 Multilateral Co-ordination Agreement relating to Technical Criteria, Coordination Principles and Procedures for the introduction of Terrestrial Digital Video Broadcasting (DVB-T) [3][2]

The measurement of the field strength at the receiving antenna site must be performed using suitable calibrated antennas.

---

2 Figures in square brackets refer to the Bibliography.

--`,,```,,,,````-`-`,,`,,`,`,,`---

Copyright International Electrotechnical Commission
Provided by IHS under license with IEC
No reproduction or networking permitted without license from IHS Not for Resale

6.2 Method of measurement of field strength

6.2.1 Introduction

This measuring method applies to the measurement of the field strength level at the antenna site in order to verify if its level is adequate for good reception conditions of FM radio and digital audio broadcasting (DAB), analogue and digital television signals.

6.2.2 Equipment required

The equipment required are:

- a calibrated antenna (half-wave dipole or log-periodic antenna) with a known antenna coefficient ANT_C, expressed in dB(m^{-1});
- a spectrum analyser having a calibrated display in dB(μV) of the tuned signal; The equipment shall be able to tune over the frequency range of the received radio and television signals.
- a calibrated coaxial cable of suitable length (for example, 10 m) having a calibrated attenuation A_C (dB) at the frequencies where the measurement is performed.

6.2.3 Connection of the equipment

- Connect the spectrum analyser to the calibrated antenna using the calibrated coaxial cable;
- Locate the calibrated antenna in the site position where the receiving antenna will be placed;
- Set the polarization of the calibrated antenna according to the electromagnetic field of the wanted signal to be measured;
- Turn the calibrated antenna towards the wanted signal to be measured in the same direction as the designed receiving antenna.

6.2.4 Measurement procedure

6.2.4.1 Analogue modulated signals

a) When signal levels are to be measured where a high ambient field is present, the measuring equipment (spectrum analyser) shall be checked for spurious readings. Connect a shielded termination to its input cable, place both the meter and the lead approximately in their measuring positions and check that there is a negligible reading at the frequency(ies) and on the meter ranges to be used.

b) Connect the spectrum analyser to the calibrated antenna by means of a calibrated coaxial cable.

The following steps depend on the type of analogue modulated signal to be measured.

AM television channel

c1) Tune the vision carrier of the television channel that is to be measured (selecting the centre frequency of the spectrum analyser) and select the span and level settings to show the whole channel;

d1) Set the span of the spectrum analyser to 0 Hz, the resolution bandwidth to 1 MHz and the video bandwidth to 1 MHz;

e1) Use the max-hold feature to display the maximum of the received signal. Measure the level *S* of the top of the displayed signal in dB(μV) using the display line cursor if this feature is available;

NOTE For positive modulation TV systems, the measuring receiver should remain connected for a sufficient period to ensure that the maximum reading is obtained. It may therefore be necessary to observe the picture in order to ensure that peak white is present in the signal during the measurement.

Copyright International Electrotechnical Commission
Provided by IHS under license with IEC
No reproduction or networking permitted without license from IHS Not for Resale

FM television channel

c2) Tune the carrier of the television channel that is to be measured (selecting the centre frequency of the spectrum analyser) and select the span and level settings to show the whole channel.

d2) Set the span of the spectrum analyser to 0 Hz, the resolution bandwidth to 1 MHz and the video bandwidth to 1 MHz.

e2) Use the max-hold feature to display the maximum of the received signal. Measure the level *S* of the top of the displayed signal in dB(μV) using the display line cursor if this feature is available;

FM radio channel

c3) Tune the carrier of the FM radio channel that is to be measured (selecting the centre frequency of the spectrum analyser) and select the span and level settings to show the whole channel;

d3) Set the span of the spectrum analyser to 0 Hz, the resolution bandwidth to 100 kHz and the video bandwidth to 10 kHz;

e3) Use the max-hold feature to display the maximum of the received signal. Measure the level *S* of the top of the displayed signal in dB(μV) using the display line cursor if this feature is available;

f) The field strength level *FSL* is calculated by the following formula:

$$FSL = S + \mathrm{ANT}_C + A_C \qquad \text{in dB(μV/m)}$$

6.2.4.2 Digitally modulated signals

a) When signal levels are to be measured where a high ambient field is present, the measuring equipment (spectrum analyser) shall be checked for spurious readings. Connect a shielded termination to its input cable, place both the meter and the lead approximately in their measuring positions and check that there is a negligible reading at the frequency(ies) and on the meter ranges to be used.

b) Tune the channel that is to be measured (selecting the centre frequency of the spectrum analyser) and select the span and level settings to show the whole channel whose bandwidth depends on the type of modulation used (see Annex I).

c) Set the resolution bandwidth *RSBW* of the spectrum analyser to 100 kHz and set the video bandwidth low enough to obtain a smooth display (100 Hz if available).

d) Measure the level *S* of the flat top of the displayed signal in dB(mW) using the display line cursor if this feature is available.

NOTE If the spectrum of the signal does not have a flat top, due to echoes, measure the signal level at the centre frequency of the channel.

e) Measure on the displayed channel the upper and lower frequencies at the channel edges where the level is 3 dB lower than the maximum level *S*; the difference between these two frequencies is assumed to be the equivalent signal bandwidth *BW*, expressed in Hz.

f) Calculate the level $S_{D,RF}$ of the signal using the following formula:

$$S_{D,RF} = S + 10 \lg\left[\frac{BW}{RSBW}\right] + K_{sa} \qquad \text{in dB(mW)}$$

The correction factor K_{sa} depends on the measuring equipment used and shall be provided by the manufacturer of the measuring equipment or obtained by calibration. The value of the correction factor for a typical spectrum analyser is about 1,7 dB (see also Annex I).

Copyright International Electrotechnical Commission
Provided by IHS under license with IEC
No reproduction or networking permitted without license from IHS Not for Resale

The correction factor is not necessary if the measuring equipment can be set to display the level in dB(mW/Hz) units. In this case the level $S_{D,RF}$ of the signal can be obtained from the measured maximum level *S* using the following formula:

$$S_{D,RF} = S + 10\lg(BW) \qquad \text{in dB(mW)}$$

In this formula the bandwidth *BW* has to be expressed in Hz.

NOTE This measuring method actually measures the *S* + *N* level. The contribution of noise is considered negligible if the level of noise displayed outside the channel band is at least 15 dB lower than the maximum level displayed within the channel band. This noise level includes that of the measuring equipment (spectrum analyser), which should be at least 10 dB lower than the noise level displayed outside the channel band in order not to affect the results. Otherwise, the contribution of noise (due to the system or the equipment under test and to the measuring equipment) must be taken into account in the measurement of signal level *S* (see Annex F).

g) The field strength level *FSL* is calculated by the following formula:

$$FSL = S_{D,RF} + \mathrm{ANT}_C + A_C + 107 \qquad \text{in dB(µV/m)}$$

NOTE The coefficient 107 applies if the input impedance of the measuring set (spectrum analyser) is 50 Ω. This value becomes 109 if the measuring set has a 75 Ω input impedance.

6.2.5 Presentation of the results

The measured field strength level of the wanted signal shall be expressed in dB(µV/m). The accuracy of the measuring equipment shall be stated with the results.

6.3 Requirements

6.3.1 General

The quality of the received signal by the antenna system is considered sufficient if

- the field strength level for each channel (radio or television) present at the receiving point is higher than the minimum values indicated in the following clauses;
- the degradations due to disturbances is lower than the values given in Table 26 and Table 27 for analogue signals.

6.3.2 Field strength requirements

a) Analogue terrestrial broadcasting

The minimum values for the field strength required at the receiving antenna site for analogue terrestrial broadcasting signals (television and FM radio) are recommended by ITU-R (Recommendation BT.417-4 for television and BS.412-9 for FM radio) and are indicated in Table 18. The electrical field strength levels are referred to the RMS value of the carrier; for television signals the reference is made to the vision carrier during the positive peak of the modulation envelope.

In Table 18 is also indicated for each band the antenna gain (referred to half-wavelength dipole) that is needed to obtain (at the input of the headend) at least 0,5 mV (54 dB(µV)) for television signals and 0,2 mV (46 dB(µV)) for FM radio signals, using a connecting cable supposed to be 10 m long and having the attenuation also indicated in Table 18.

These values are applicable for individual reception only, without any amplifier between the antenna and the receiver. In this case the minimum values of Table 4 can be lower.

For MATV systems the minimum field strengths levels of Table 18 shall be increased by 6 dB and for CATV systems shall be increased by 10 dB.

--`,,```,,,,````-`-`,,`,,`,`,,`---

Copyright International Electrotechnical Commission
Provided by IHS under license with IEC
No reproduction or networking permitted without license from IHS Not for Resale

Table 18 – Minimum field strength levels recommended by ITU-R

Band	Minimum electric field strength level		Antenna gain (referred to half-wavelength dipole)	Cable attenuation (10 m)
	dB(μV/m)	μV/m	dB	dB
Television				
I	48	250	8,1	0,6
III	55	560	12,7	1,2
IV	65	1780	11,7	1,9
V	70	3160	9,7	2,3
FM radio 87,5-108 MHz	48	250	5,1	0,8
NOTE These antenna gains are given for information. The actual antenna gain should be selected according to the minimum field strength levels available at the receiving site.				

b) Digital terrestrial broadcasting

The minimum values for the field strength required at the receiving antenna site for DVB-T signals are recommended by CEPT [3] for the different receiving conditions:

- outdoor fixed reception,
- outdoor mobile reception
- indoor (ground floor) reception (portable receiver).

For fixed reception of DVB-T signals (COFDM: 64 QAM, 2/3 rate, 8k mode) and 8 MHz channel, the values given in Table 19 are recommended.

Table 19 – Minimum field strength levels recommended by CEPT [3]

Modulation	Band	Minimum electric field strength level	
		dB(μV/m)	μV/m
8k 64 QAM	III	38	80
	IV	44	160
	V	48	250
2 k 16QAM	III	u.c.	
	IV	u.c.	
	V	u.c.	

The values of Table 19 assume fixed reception conditions, supposed to be obtained using a directive antenna at 10 m above ground level.

These values are applicable for individual reception only, without any amplifier between the antenna and the receiver.

For MATV systems the minimum field strength levels of Table 19 shall be increased by 6 dB and for CATV systems by 10 dB.

For 7 MHz channels the recommendations for field strength levels are 0,6 dB lower than for 8 MHz channels.

For 6 MHz channels the recommendations for field strength levels are 1,25 dB lower than for 8 MHz channels.

c) Analogue and digital satellite broadcasting

The power transmitted by satellites for DTH service is about 50 dB(W) to 52 dB(W); in the service area (usually defined where the power density is -3 dB with respect to bore site),

Copyright International Electrotechnical Commission
Provided by IHS under license with IEC
No reproduction or networking permitted without license from IHS Not for Resale

receiving antennas with a diameter lower than 1 m are sufficient, if the LNB noise figure is lower than 2 dB.

The main disturbance is due to noise and atmosphere conditions (fog, rain, etc.). It is advisable to design the receiving system (antenna and LNB) with a suitable margin related to the minimum C/N required at the systems outlet.

For community reception using distribution at 1st IF (950 MHz to 2 150 MHz) of PSK, APSK or FM modulated signals, it is suggested that the antenna diameter should be increased by 50 % to compensate for degradations due to the distribution system.

6.3.3 Quality of received signals

6.3.3.1 Introduction

Using the antenna designed (gain, directivity and polarization) for receiving the wanted signals at the antenna site, the following minimum signal levels at the headend input shall be obtained as stated in Table 20 to Table 25. For analogue broadcasting, the signal-to-disturbance ratio stated in Table 26 and signal-to-echo ratio stated in Table 27 shall be obtained at the headend input.

6.3.3.2 Signal level

a) Analogue sound broadcasting in the FM range

For the FM range, when using the designed antenna, the signal levels for mono and stereo reception stated in Table 20 shall be obtained at the headend input.

Table 20 – Minimum signal level at the headend input for the reception of analogue sound broadcasting

Band	Minimum signal level for stereo reception dB(μV)	Minimum signal level for mono reception dB(μV)
II (FM)	56	46

b) Analogue television broadcasting in bands I, III, IV and V

For the individual television bands, Table 21 states minimum signal levels at the headend input for which a carrier-to-noise ratio *C/N* of 44 dB can be expected at system outlets, as required for good reception using commercial TV sets.

Table 21 – Minimum signal level at the headend input for the reception of analogue television broadcasting

Band	Minimum signal level for MATV systems dB(μV)	Minimum signal level for CATV systems dB(μV)
I	54	66
III	54	66
IV/V	54	66
NOTE This assumes a system noise figure of 8 dB for MATV and 20 dB for CATV systems.		

c) Digital Audio Broadcasting (DAB) in Band III and L-Band

For the reception of DAB signals in Band III and in the L-Band the minimum signal levels at the headend input stated in Table 22 shall be obtained.

--`,,```,,,,````-`-`,,`,,`,`,,`---
Copyright International Electrotechnical Commission
Provided by IHS under license with IEC
No reproduction or networking permitted without license from IHS Not for Resale

Table 22 – Minimum signal level at the headend input for the reception of DAB signals at an error ratio of $1 \cdot 10^{-4}$ and code rate 1/2

Band	Minimum signal level for DAB dB(µV)
III	28
L-Band	28

In addition, the specifications according to EN 50248 apply.

d) Digital terrestrial television broadcasting in bands III, IV and V

The values stated in Table 23 are valid for band IV/V. In band III, the values for the minimum signal levels are each reduced by 0,6 dB. The values are based on DVB-T signals (COFDM) in 8 MHz channels and for a bit-error ratio of $2 \cdot 10^{-4}$.

Table 23 – Minimum signal level and RF signal-to-noise ratio at the headend input for stationary reception

DVB-T COFDM Modulation method	Code rate	Stationary reception (Rice channel)		Portable reception (Rayleigh channel)	
		$S_{D,RF}/N$ dB	Minimum signal level dB(µV)	$S_{D,RF}/N$ dB	Minimum signal level dB(µV)
QPSK	1/2	6,1	17,7	7,9	19,5
	2/3	8,2	19,8	10,9	22,5
	3/4	9,3	20,9	13,3	24,9
	5/6	10,5	22,1	15,7	27,3
	7/8	11,3	22,9	19,1	30,7
16 QAM	1/2	12,2	23,8	13,8	25,4
	2/3	14,2	25,8	16,9	28,5
	3/4	15,6	27,2	19,5	31,1
	5/6	17,1	28,7	22,4	34,0
	7/8	17,7	29,3	26,9	38,5
64 QAM	1/2	17,4	29,0	18,8	30,4
	2/3	20,0	31,6	22,4	34,0
	3/4	21,6	33,2	25,4	37,0
	5/6	23,3	34,9	31,2	42,8
	7/8	24,5	36,1	39,0	50,6
NOTE The values are also valid for portable reception at the receiver input					

e) Satellite reception in the frequency range 950 MHz to 2 150 MHz

e.1) Analogue satellite reception

The minimum input level at the headend (LNB output and 10 m of coaxial cable) applies for the minimum carrier-to-noise ratios stated in Table 24. and for an availability of 99 %.

--`,,```,,,,````-`-`,,`,,`,`,,`---

Copyright International Electrotechnical Commission
Provided by IHS under license with IEC
No reproduction or networking permitted without license from IHS Not for Resale

Table 24 – Minimum signal level and carrier-to-noise ratio at the headend input for the reception of FM modulated satellite signals

Transponder bandwidth MHz	***C/N*** dB	**Minimum signal level** dB(μV)
27	12	44
36	14	44

e.2) Digital satellite reception

The minimum input level of 44 dB(μV) at the headend (LNB output and 10 m of coaxial cable) applies for the minimum carrier-to-noise ratios stated in Table 25 at the respective transmission parameters.

Table 25 is based on an MPEG2/MPEG-4 source coding with a Reed-Solomon code rate R = 188/204 for DVB-S satellite signals and with a BCH/LDPC coding for DVB-S2 satellite signals. The DVB-S signals are QPSK modulated and meet a minimum *BER* of $2 \cdot 10^{-4}$. The DVB-S2 signals are specified for different modulation forms and meet a minimum *PER* of 10^{-7} with an AWGN channel and a FECFRAME length of 64 800.

Table 25 – Minimum RF signal-to-noise ratio at the headend input for the reception of DVB-S or DVB-S2 satellite signals

Code rate	**DVB-S QPSK** $S_{D,RF}/N$ dB	**DVB-S2 QPSK** $S_{D,RF}/N$ dB	**DVB-S2 8PSK** $S_{D,RF}/N$ dB	**DVB-S2 16APSK** $S_{D,RF}/N$ dB	**DVB-S2 32APSK** $S_{D,RF}/N$ dB
1/4	-	3,7	-	-	-
1/3	-	4,8	-	-	-
2/5	-	5,7	-	-.	-
1/2	8,6	7,0	-	-	-
3/5	-	8,3	11,5	-	-
2/3	10,5	9,1	12,6	15,0	-
3/4	11,6	10,0	13,9	16,2	18,8
4/5	-	10,7	-	17,1	19,7
5/6	12,6	11,2	15,4	17,6	20,3
7/8	13,3	-	-	-	-
8/9	-	12,2	16,7	18,9	21,7
9/10	-	12,4	17,0	19,2	22,1
NOTE For FECFRAME = 16 200, an additional degradation of 0,2 dB to 0,3 dB should be taken into account					

f) Additional specifications for satellite reception

In addition, the specifications according to ETSI ETS 300 784, ETSI EN 300 421 and ETSI EN 302 307 apply for satellite reception.

6.3.3.3 Minimum signal/disturbance ratio for analogue terrestrial broadcasting signals

For analogue AM television and FM radio terrestrial broadcasting the minimum values for signal-to-disturbance ratios (impulsive or sinusoidal (continuous wave) disturbance) at the input of the headend as stated in Table 26 applies.

--`,,```,,,,````-`-`,,`,,`,`,,`---
Copyright International Electrotechnical Commission
Provided by IHS under license with IEC
No reproduction or networking permitted without license from IHS Not for Resale

Table 26 – Minimum values for signal-to-disturbance ratio

Service	Minimum signal-to-disturbance ratio	
	Impulsive disturbance	Sinusoidal disturbance
	dB	dB
Television	43	60
FM radio 87,5 MHz – 108 MHz	50	50

6.3.3.4 Minimum signal/echo ratio for analogue terrestrial broadcasting signals

For analogue terrestrial AM television broadcasting, the minimum values for signal-to-echo ratios at the input of the headend as stated in Table 27 applies.

Table 27 – Minimum values for signal-to-echo ratio

Service	Echo [a]	
	Delay	Signal-to-echo ratio
	µs	dB
Television	2,0	40
	0,5	30
	0,2	20
	0,05	10

[a] These values take into account only the requirements for picture and not for teletext signals. For teletext, the requirements given in 5.10.2 apply.

6.3.3.5 BER/PER and other quality requirements of digital signals

The quality of digital signals is related to BER and PER. If BER is lower than a certain value, the signal received can be restored without errors in the baseband, the image and the sound is reproduced as coded by the source.

The DVB systems are designed for a QEF reception before the MPEG-2 or MPEG-4 decoder; this condition allows a reception with less than one error every reception hour. Using a transmitted bit rate of 20 Mbit/s to 40 Mbit/s, the QEF condition is reached with a *BER* of 10^{-11} after Reed-Solomon decoding, that requires a *BER* of 10^{-4} before Reed-Solomon decoding, considering only white-noise effect. This value is generally indicated as the required *BER* for a good digital television signal reception.

DVB-S2 transmission systems for satellite signals consider the QEF condition at *PER* = 10^{-7} after LDPC and BCH decoders.

6.3.3.6 "Threshold" behaviour of digital television signals and installation quality

An important characteristic of digital television signals is the "threshold" behaviour, as usual for digital systems with no dependence on the transmission channel used (satellite, terrestrial, cable). If the *BER* is lower than a certain limit, the signal is not dependent on the degradations due to the transmission chain, the picture and sound can be reproduced correctly because of the error correction provided by the receiver. If this limit is overcome, the quality of picture and sound decreases rapidly.

In order to obtain a reliable service, it is not sufficient to verify that the received signal is free from errors, looking at the picture seen on the television screen or considering the sound

Copyright International Electrotechnical Commission
Provided by IHS under license with IEC
No reproduction or networking permitted without license from IHS Not for Resale

quality, because the receiving system could have a very small margin. In this case, a very small increase in amount of noise or of the interfering signal or of the transmission loss, due to meteorological reasons or other impairments, can cause the service interruption. It is therefore recommended to design and install the individual or community receiving systems taking into account the performance requirements that are able to guarantee a sufficient quality margin at the system outlets.

6.3.4 Safety

The specifications according to IEC 60728-11 apply.

6.3.5 Electromagnetic compatibility (EMC)

The specifications according to IEC 60728-2 and IEC 60728-12 apply.

6.4 Interference reduction

6.4.1 General

Interference within or outside receiving systems may affect the picture and sound quality. For interference of sources, which are outside the antenna system, the following measures apply.

An anti-interference antenna design like a directional antenna or an anti-interference location should be selected.

The outgoing lines of the antennas and the RF distribution network up to the receiver inputs shall be shielded straight-through (for shielding efficiency, see IEC 60728-2).

Within the system, no interfering reflections shall develop (see IEC 60728-12).

6.4.2 Active antennas

Self-generated oscillations which might occur in the case of wrong terminated outputs (open-circuit operation/short circuit) and in the case of approximation of output line and antenna (operating error) shall be measured as specified in IEC 60728-2.

7 Performance requirements at home network interfaces of cable networks

7.1 Introduction

NOTE For requirements in Japan, see J.17.

The following types of home networks (HN) are possible:

a) passive coaxial home network;

b) active coaxial home network;

c) different home network types.

Figure 43 shows typical situations that are possible when considering home networks.

The home network can be realised using coaxial cables, balanced cables, optical cables or radio links.

This clause specifies the requirements to be obtained at the home network interface (HNI) based upon coaxial cabling and/or balanced cabling or other types of links are used inside an apartment for carrying BCT signals provided by a CATV, MATV or SMATV cable network. This HNI may be used as well for connecting individual roof antennas in the case of a single dwelling unit home.

--`,,```,,,,````-`-`,,`,,`,`,,`---

Copyright International Electrotechnical Commission
Provided by IHS under license with IEC
No reproduction or networking permitted without license from IHS Not for Resale

The characteristics of the signals delivered by the CATV, MATV or SMATV cable network at the HNI are defined, taking into account

a) the signal performance requirements at the system outlets (SO), defined in Clause 5, or the requirements at the input of the terminal equipment to be connected;

b) the impairment of the signals due to the home network (see Annex K).

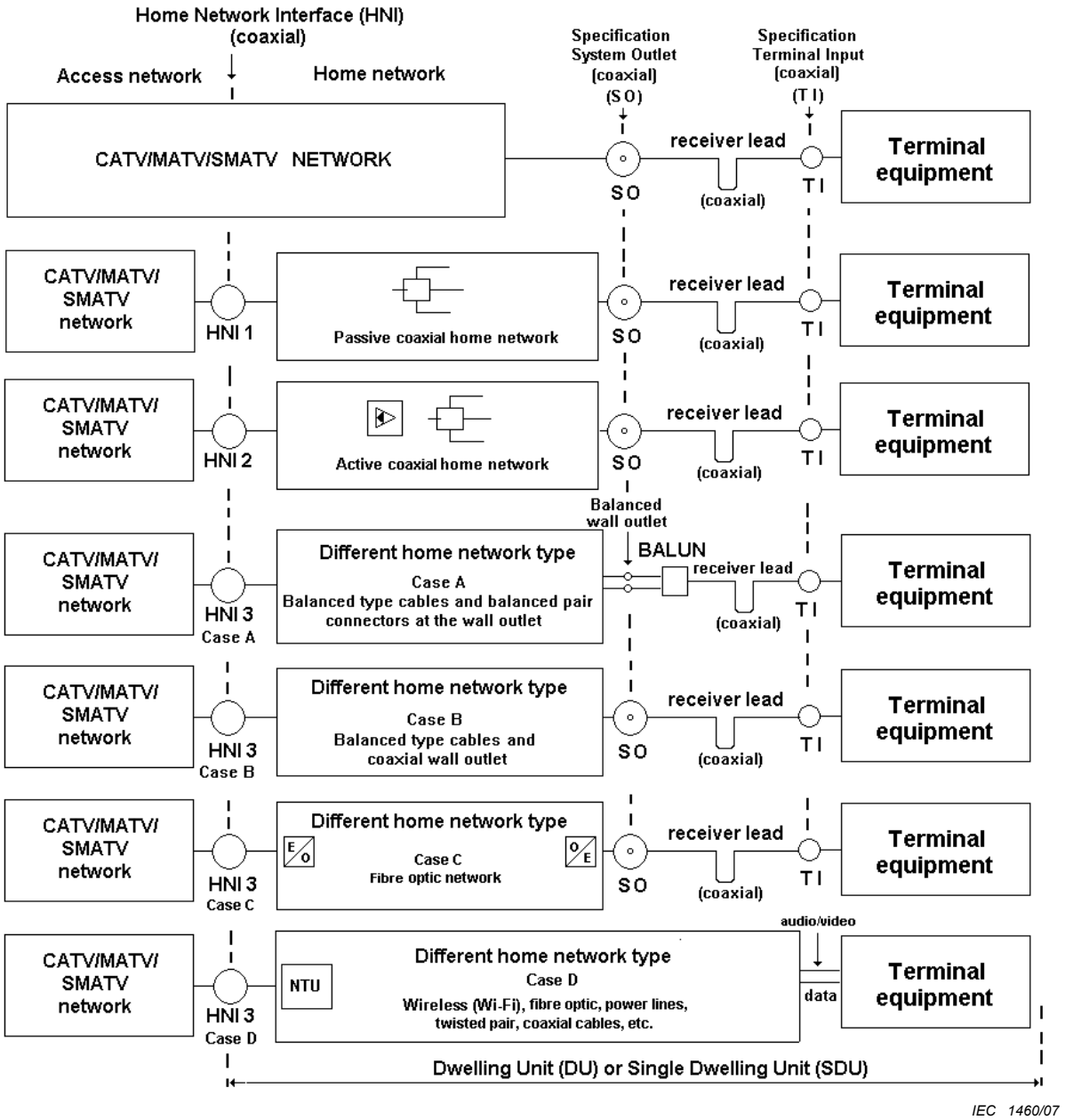

Figure 43 – Home network types used to define the requirements at HNIi (coaxial)

Transmission requirements for each application reported in 7.2 to 7.6 shall be considered for dimensioning the HN to support as many applications as possible according to the “generic cabling” principle.

Copyright International Electrotechnical Commission
Provided by IHS under license with IEC
No reproduction or networking permitted without license from IHS Not for Resale

7.2 Requirements at HNI1 for passive coaxial home networks

7.2.1 General

The requirements listed below apply at the coaxial HNI1 when the home network is only passive. Taking into account the allowed degradation of the signals in the passive coaxial home network, these requirements, defined at the home network interface, are able to obtain the requirements specified in Clause 5 at each system outlet or terminal input.

7.2.2 Carrier levels at the HNI1

7.2.2.1 Minimum and maximum carrier levels

The maximum levels at the HNI1 shall not exceed, and the minimum levels shall be not less than, those shown in Table 28, where α_p is the highest attenuation due to the splitters, the length and type of the cables, the filters (in the system outlet), etc., used in the passive coaxial home network. In any case, the value of α_p shall be not lower than $\alpha_{p,min}$ = 3 dB and not higher than $\alpha_{p,max}$ = 18 dB at 1 GHz or $\alpha_{p,max}$ = 26 dB at 2 GHz.

The carrier level at the HNI1 is constrained as well by the 5 dB sectional slope of the passive coaxial home network (SSLP) defined in 7.2.2.2.

--`,,```,,,,````-`-`,,`,,`,`,,`---

Copyright International Electrotechnical Commission
Provided by IHS under license with IEC
No reproduction or networking permitted without license from IHS Not for Resale

Table 28 – Signal level at HNI1

Type of service	Systems	Modulation		Frequency range	Minimum level dB(μV)	Maximum level dB(μV)
Television	PAL, SECAM	AM-VSB		VHF/UHF	60 [a] + α_p	80 [b] + α_p
	NTSC	AM-VSB		30 to 300 MHz	57 + α_p	83 + α_p
	NTSC	AM-VSB		300 to 1 000 MHz	60 + α_p	83 + α_p
	PAL, SECAM	FM		1st IF	47 + α_p	77 + α_p
	NTSC	FM		240 to 770 MHz	60 + α_p	83 + α_p
	NTSC	FM		1 035 to 1 335 MHz	57 + α_p	81 + α_p
	DVB-S	QPSK		1st IF	47 + α_p	77 + α_p
	DVB-S2	QPSK, 8PSK, 16APSK, 32APSK		1st IF	47 + α_p	77 + α_p
	DVB-C	16 QAM		VHF/UHF	41 + α_p	61 + α_p
	DVB-C	64 QAM		VHF/UHF	47 + α_p	67 + α_p
	DVB-C	256 QAM		VHF/UHF	54 + α_p	74 + α_p
	DVB-T COFDM	QPSK	Code rate 1/2 2/3 3/4 5/6 7/8	VHF/UHF	 26 + α_p 28 + α_p 30 + α_p 33 + α_p 35 + α_p	 74 + α_p 74 + α_p 74 + α_p 74 + α_p 74 + α_p
		16 QAM	Code rate 1/2 2/3 3/4 5/6 7/8		 32 + α_p 36 + α_p 39 + α_p 42 + α_p 45 + α_p	 74 + α_p 74 + α_p 74 + α_p 74 + α_p 74 + α_p
		64 QAM	Code rate 1/2 2/3 3/4 5/6 7/8		 42 + α_p 45 + α_p 48 + α_p 51 + α_p 54 + α_p	 74 + α_p 74 + α_p 74 + α_p 74 + α_p 74 + α_p
Sound Radio	Mono	FM		VHF	40 + α_p	70 + α_p
	Stereo	FM		VHF	50 + α_p	70 + α_p
	DAB	OFDM		Band III	28 + α_p	94 + α_p
				L-Band	28 + α_p	84 + α_p

[a] 57 dB(μV) for systems with 8 MHz spacing only and with a *C/N* of 45,5 dB for system L.

[b] 77 dB(μV) for systems with >20 channels load.

7.2.2.2 Carrier level differences at the HNI1

The differences in carrier levels at the HNI1 shall not exceed the values given in Table 29, where *SSLP* is the maximum sectional slope in the passive coaxial home network. The maximum value of *SSLP* between the HNI1 and any system outlet depends on the length and type of the cables used in the passive coaxial home network. In any case, this value shall be not higher than 5 dB in the VHF/UHF bands, 3 dB in any 60 MHz range in VHF and 1,5 dB for any adjacent television channels.

Copyright International Electrotechnical Commission
Provided by IHS under license with IEC
No reproduction or networking permitted without license from IHS Not for Resale

Table 29 – Maximum level differences at HNI1

Systems	Modulation	Frequency range	Maximum level difference dB
PAL, SECAM	AM-VSB	47 MHz to 862 MHz	12 – *SSLP*
NTSC	AM-VSB	30 MHz to 1 000 MHz	15 – *SSLP*
NTSC	AM-VSB	30 MHz to 300 MHz	12 – *SSLP*
PAL, SECAM	AM-VSB	Any 60 MHz range in VHF	6 – *SSLP*
NTSC	AM-VSB	Any 60 MHz range in VHF	8 – *SSLP*
PAL, SECAM, NTSC	AM-VSB	Adjacent channel	3 – *SSLP*
PAL, SECAM	FM	950 MHz to 2 150 MHz	15 – *SSLP*
NTSC	FM	950 MHz to 2 150 MHz	u.c.
PAL, SECAM	FM	up to 470 MHz (see NOTE 2)	15 – *SSLP*
NTSC	FM	up to 470 MHz (see NOTE 2)	u.c.
DVB-S	QPSK	950 MHz to 2 150 MHz	u.c.
DVB-S2	QPSK, 8PSK, 16APSK, 32APSK	950 MHz to 2 150 MHz	u.c.
DVB-C	64 QAM	Adjacent channel	3 – *SSLP*
DVB-C	64 QAM	Adjacent channel to AM-VSB	10 [a] – *SSLP*
DVB-C	256 QAM	Adjacent channel	3 – *SSLP*
DVB-C	256 QAM	Adjacent channel to AM-VSB	6 [a] – *SSLP*
DVB-T	COFDM	Adjacent channel	3 – *SSLP*
DVB-T	COFDM	Adjacent channel to AM-VSB	6 – *SSLP*
[a] The 64 QAM, 256 QAM and COFDM signals shall be below the level of the adjacent AM signal.			

If FM sound signals are present at the HNI1, the level of any FM carrier shall be at least 2,5 dB lower than the lowest AM-VSB television signal level at the HNI1.

NOTE 1 The difference applies to signals having the same type of modulation.

NOTE 2 The value includes the possible coexistence of signals of 27 MHz bandwidth FM and 7 MHz to 8 MHz bandwidth AM-VSB which may be in the close vicinity. The levels of FM satellite channels relative to AM-VSB terrestrial channels should be 0 dB to -7 dB.

NOTE 3 When equal-level FM radio signals are transmitted from the headend, then the maximum difference between these signals at the HNI1 should be 5 dB.

NOTE 4 A maximum *SSLP* of 5 dB means that, if the splitters were "flat", the cable loss should not exceed 6,5 dB; in practice, less, as some margin should be used for the SSLP of the passive equipment.

7.2.3 Mutual isolation between two HNI1

The minimum isolation at any frequency between any two HNI1 connected separately to a spur feeder shall be as given in Table 30, where the requirements for system outlets are reduced by the sum of the minimum attenuation $\alpha_{p1(min)}$ + $\alpha_{p2(min)}$ introduced by each of the two passive coaxial home networks, if known, or by 4 dB to 6 dB. In any case the minimum mutual isolation between two HNI1 shall be not lower than 22 dB, to reduce the effects of impedance mismatching in the home networks.

--`,,```,,,,````-`-`,,`,,`,`,,`---

Copyright International Electrotechnical Commission
Provided by IHS under license with IEC
No reproduction or networking permitted without license from IHS Not for Resale

Table 30 – Mutual isolation between two HNI1

Type of service	Frequency range	Mutual isolation (dB)
TV/TV	47 MHz to 862 MHz (7 MHz channels only or mixed 7-8 MHz)	$42 - (\alpha_{p1(min)} + \alpha_{p2(min)})$
TV/TV	47 MHz to 862 MHz (8 MHz channels only)	$30 - (\alpha_{p1(min)} + \alpha_{p2(min)})$
TV/TV	950 MHz to 2 150 MHz	$30 - (\alpha_{p1(min)} + \alpha_{p2(min)})$
FM sound/FM sound	VHF	$42 - (\alpha_{p1(min)} + \alpha_{p2(min)})$
TV/FM sound		$50 - (\alpha_{p1(min)} + \alpha_{p2(min)})$
NOTE 1 For systems carrying channels chosen so that TV local oscillators do not fall within any distributed channels, the figure for mutual isolation may be reduced. NOTE 2 In systems using a return path, the requirement cannot be fulfilled at the lower frequency of 47 MHz but at a convenient higher frequency, depending on the return path band. NOTE 3 The recommended mutual isolation for TV/FM sound is applicable only for networks where FM sound is distributed.		

7.2.4 Frequency response within any television channel at the HNI1

7.2.4.1 Amplitude response at the HNI1

The amplitude response variations within any television channel present at the HNI1 shall not exceed the values given in Table 31.

Table 31 – Amplitude response variation at HNI1

Signal modulation	Occupied or channel bandwidth MHz	Maximum variation (peak-to-peak) dB	Maximum slope variation dB/MHz
AM-VSB television	7 or 8	1,5	0,8
FM television	27-36	3	1,0
QPSK (DVB-S)	37,125	7	0,5
QPSK, 8PSK, 16APSK, 32APSK (DVB-S2)	37,125	u.c.	u.c.
64 QAM (DVB-C)	8	3 [a]	1,3
256 QAM (DVB-C)	8	1,5	u.c.
COFDM (DVB-T)	8	7,8	7,8
[a] DOCSIS/Euro-DOCSIS requires 2,5 dB at modem input because it assumes that 256 QAM is also distributed and that all kinds of impairments are present. This means that 1,5 dB is required at HNI1.			

7.2.4.2 Group delay at the HNI1

The group delay variation within any television channel present at the HNI1 shall not exceed the values given in Table 32.

Copyright International Electrotechnical Commission
Provided by IHS under license with IEC
No reproduction or networking permitted without license from IHS Not for Resale

Table 32 – Group delay variation at HNI1

Signal modulation	Frequency range MHz	Maximum group delay variation ns
AM-VSB television (PAL) with teletext	0,5 – 4,43	90
AM-VSB television (PAL) without teletext	0,5 – 4,43	190
QAM [a]	Signal bandwidth (see H.2.3)	90
OFDM	Signal bandwidth (see H.2.3)	90
[a] Required by DOCSIS/Euro-DOCSIS		

7.2.5 Long-term frequency stability of distributed carrier signals at HNI1

The frequency stability is determined by the headend equipment (IEC 60728-5) and the figures given for headend equipment apply. At the HNI1 the maximum frequency deviation from the nominal value of the carrier frequency of the channel shall not exceed the values given for system outlets in 5.7.

7.2.6 Random noise at the HNI1

At HNI1, the level of the noise voltage generated in the system in any channel shall be such that the carrier-to-noise ratio shall be not less than the values shown in Table 11 and Table 12 for system outlets. The test method for TV carrier-to-noise ratio, given in 4.6 for system outlets, is applicable also to HNI1. For FM sound radio signals the same method can be used, but in this case, the noise bandwidth to be taken is 200 kHz. The test method for digitally modulated carriers ($S_{D,RF}/N$), given in 4.11.4 for system outlets, is applicable also to HNI1.

If the main impairment is the noise, the values given in Table 11 are also applicable to MER.

7.2.7 Interference to television channels at the HNI1

7.2.7.1 Single-frequency interference at the HNI1

The requirements of 5.9.1 at system outlet apply.

7.2.7.2 Single-channel intermodulation interference at the HNI1

The requirements of 5.9.2 at system outlet apply.

7.2.7.3 Multiple frequency intermodulation interference at the HNI1

The requirements of 5.9.3 at system outlet apply.

7.2.7.4 Intermodulation noise at the HNI1

The requirements of 5.9.4 at system outlet apply.

7.2.7.5 Crossmodulation at the HNI1

Under consideration.

Copyright International Electrotechnical Commission
Provided by IHS under license with IEC
No reproduction or networking permitted without license from IHS Not for Resale

7.2.8 Return path requirements at the HNI1

The return path requirements at HNI1 shall be defined in accordance with the requirements of IEC 60728-10. The HNI1 is taken as an additional reference point for the return path while the other reference point is located at the input of the return signal receiver (transceiver).

The requirements at HNI1 are under consideration.

7.3 Requirements at HNI2 for active coaxial home networks

The requirements listed below apply to the coaxial home network interface (HNI2) when the home network includes active equipment. Taking into account the allowed degradation of the signals in the active coaxial home network, these requirements, defined at the home network interface HNI2, are able to obtain the requirements specified in Clause 5 at each system outlet or terminal input.

7.3.1 Carrier levels at the HNI2

7.3.1.1 Minimum and maximum carrier levels

The maximum levels at the HNI2 shall not exceed, and the minimum levels shall be not less than, those shown in Table 33, where β_i is the increase of level at the HNI2 with respect to the level required at any system outlet. The value of β_{min} is between +3 dB and +6 dB for the minimum signal level and the value of β_{max} is between 0 dB and +3 dB for the maximum signal level in VHF/UHF. The value β_{IF} is between +1 dB and +4 dB at 1st IF for satellite reception, both for maximum and minimum signal levels.

NOTE EXAMPLE: For PAL television signals the minimum level at the HNI2 shall be in the range of 63 dB(μV) to 66 dB(μV) and the maximum level in the range of 80 dB(μV) to 83 dB(μV).

Copyright International Electrotechnical Commission
Provided by IHS under license with IEC
No reproduction or networking permitted without license from IHS Not for Resale

Table 33 – Signal level at HNI2

Type of service	Systems	Modulation		Frequency range	Minimum level dB(μV)	Maximum level dB(μV)
Television	PAL, SECAM	AM-VSB		VHF/UHF	60 [a] + β_{min}	80 [b] + β_{max}
	NTSC	AM-VSB		30 to 300 MHz	57 + β_{min}	83 + β_{max}
	NTSC	AM-VSB		300 to 1 000 MHz	60 + β_{min}	83 + β_{max}
	PAL, SECAM	FM		1st IF	47 + β_{IF}	77 + β_{IF}
	NTSC	FM		240 to 770 MHz	60 + β_{min}	83 + β_{max}
	NTSC	FM		1 035 to 1 335 MHz	57 + β_{IF}	81 + β_{IF}
	DVB-S	QPSK		1st IF	47 + β_{IF}	77 + β_{IF}
	DVB-S2	QPSK, 8PSK, 16APSK, 32APSK		1st IF	47 + β_{IF}	77 + β_{IF}
	DVB-C	16 QAM		VHF/UHF	41 + β_{min}	61 + β_{max}
	DVB-C	64 QAM		VHF/UHF	47 + β_{min}	67 + β_{max}
	DVB-C	256 QAM		VHF/UHF	54 + β_{min}	74 + β_{max}
	DVB-T COFDM	QPSK	Code rate 1/2	VHF/UHF	26 + β_{min}	74 + β_{max}
			2/3		28 + β_{min}	74 + β_{max}
			3/4		30 + β_{min}	74 + β_{max}
			5/6		33 + β_{min}	74 + β_{max}
			7/8		35 + β_{min}	74 + β_{max}
		16 QAM	Code rate 1/2		32 + β_{min}	74 + β_{max}
			2/3		36 + β_{min}	74 + β_{max}
			3/4		39 + β_{min}	74 + β_{max}
			5/6		42 + β_{min}	74 + β_{max}
			7/8		45 + β_{min}	74 + β_{max}
		64 QAM	Code rate 1/2		42 + β_{min}	74 + β_{max}
			2/3		45 + β_{min}	74 + β_{max}
			3/4		48 + β_{min}	74 + β_{max}
			5/6		51 + β_{min}	74 + β_{max}
			7/8		54 + β_{min}	74 + β_{max}
Sound Radio	Mono	FM		VHF	40 + β_{min}	70 + β_{max}
	Stereo	FM		VHF	50 + β_{min}	70 + β_{max}
	DAB	OFDM		Band III	28 + β_{min}	94 + β_{max}
				L-Band	28 + β_{IF}	84 + β_{IF}

[a] 57 dB(μV) for systems with 8 MHz spacing only and with a *C/N* of 45,5 dB for system L.

[b] 77 dB(μV) for systems with >20 channels load.

7.3.1.2 Carrier level differences at the HNI2

The differences in carrier levels at the HNI2 shall not exceed the values given in Table 34, where *SSLA* is the maximum sectional slope in the active coaxial home network. The maximum value of *SSLA* between the HNI2 and any system outlet depends on the active and passive equipment used in the active coaxial home network. In any case this value shall be not higher than 5 dB in the VHF/UHF bands, 3 dB in any 60 MHz range in VHF and 1,5 dB for any adjacent channels.

Copyright International Electrotechnical Commission
Provided by IHS under license with IEC
No reproduction or networking permitted without license from IHS Not for Resale

Table 34 – Maximum level differences at HNI2

Systems	Modulation	Frequency range	Maximum level difference dB
PAL, SECAM	AM-VSB	47 MHz to 862 MHz	12 – *SSLA*
NTSC	AM-VSB	30 MHz to 1 000 MHz	15 – *SSLA*
NTSC	AM-VSB	30 MHz to 300 MHz	12 – *SSLA*
PAL, SECAM	AM-VSB	Any 60 MHz range in VHF	6 – *SSLA*
NTSC	AM-VSB	Any 60 MHz range in VHF	8 – *SSLA*
PAL, SECAM, NTSC	AM-VSB	Adjacent channel	3 – *SSLA*
PAL, SECAM	FM	950 MHz to 2 150 MHz	15 – *SSLA*
NTSC	FM	950 MHz to 2 150 MHz	u.c.
PAL, SECAM	FM	Up to 470 MHz (see NOTE 2)	15 – *SSLA*
NTSC	FM	Up to 470 MHz (see NOTE 2)	u.c.
DVB-S	QPSK	950 MHz to 2 150 MHz	u.c.
DVB-S2	QPSK, 8PSK, 16APSK, 32APSK	950 MHz to 2 150 MHz	u.c.
DVB-C	64 QAM	Adjacent channel	3 – *SSLA*
DVB-C	64 QAM	Adjacent channel to AM-VSB	10 [a] – *SSLA*
DVB-C	256 QAM	Adjacent channel	3 – *SSLA*
DVB-C	256 QAM	Adjacent channel to AM-VSB	6 [a] – *SSLA*
DVB-T	COFDM	Adjacent channel	3 – *SSLA*
DVB-T	COFDM	Adjacent channel to AM-VSB	6 – *SSLA*
[a] The 64 QAM, 256 QAM and COFDM signals shall be below the level of the adjacent AM signal.			

If FM sound signals are present at the HNI2, the level of any FM carrier shall be at least 3 dB lower than the lowest AM-VSB television signal level at the HNI2.

NOTE 1 The difference applies to signals having the same type of modulation.

NOTE 2 The value includes the possible coexistence of signals of 27 MHz bandwidth FM and 7 MHz to 8 MHz bandwidth AM-VSB which may be in the close vicinity. The levels of FM satellite channels relative to AM-VSB terrestrial channels should be 0 dB to -7 dB.

NOTE 3 When equal level FM radio signals are transmitted from the headend, then the maximum difference between these signals at the HNI2 should be 5 dB.

NOTE 4 A maximum SSLA of 5 dB means that the active equipment may have to provide a pre-emphasis when the SSL of the cable and splitters exceeds 5 dB.

7.3.2 Mutual isolation between two HNI2

The values given in Table 30, for HNI1 apply also for HNI2, replacing $\alpha_{pi(min)}$ with $\beta_{i,min}$. In any case the minimum mutual isolation between two HNI2 shall be not lower than 22 dB, to reduce the effects of impedance mismatching in the home networks.

7.3.3 Frequency response within any television channel at the HNI2

7.3.3.1 Amplitude response at the HNI2

The amplitude response variations within any television channel present at the HNI2 shall not exceed the values given in Table 35.

Copyright International Electrotechnical Commission
Provided by IHS under license with IEC
No reproduction or networking permitted without license from IHS Not for Resale

Table 35 – Amplitude response variation at HNI2

Signal modulation	Occupied or channel bandwidth MHz	Maximum variation (peak-to-peak) dB	Maximum slope variation dB/MHz
AM-VSB television	7 or 8	1,5	0,8
FM television	27 – 36	3	1,0
QPSK (DVB-S)	37,125	7	0,5
QPSK, 8PSK, 16APSK, 32APSK (DVB-S2)	37,125	u.c.	u.c.
64 QAM (DVB-C)	8	3 [a]	1,3
256 QAM (DVB-C)	8	1,5	u.c.
COFDM (DVB-T)	8	7,8	7,8

[a] DOCSIS/Euro-DOCSIS requires 2,5 dB at modem input because it assumes that also 256 QAM is distributed and that all kinds of impairments are present. This means that 1,5 dB is required at HNI2.

7.3.3.2 Group delay at the HNI2

The group delay variation within any television channel present at the HNI2 shall not exceed the values given in Table 36.

Table 36 – Group delay variation at HNI2

Signal modulation	Frequency range MHz	Maximum group delay variation ns
AM-VSB television (PAL) with teletext	0,5 – 4,43	90
AM-VSB television (PAL) without teletext	0,5 – 4,43	190
QAM [a]	Signal bandwidth (see H.2.3)	90
OFDM	Signal bandwidth (see H.2.3)	90

[a] Required by DOCSIS/Euro-DOCSIS

7.3.4 Long-term frequency stability of distributed carrier signals at HNI2

The frequency stability is determined by the headend equipment (IEC 60728-5) and the figures given for headend equipment apply. At HNI2, the maximum frequency deviation from the nominal value of the carrier frequency of the channel shall not exceed the values given for system outlets in 5.7.

7.3.5 Random noise at HNI2

At HNI2, the level of the noise voltage generated in the system in any channel shall be such that the carrier-to-noise ratio shall be not less than the values shown in Table 37 and Table 38. The test method for TV carrier-to-noise ratio, given in 4.6 for system outlets, is applicable also to HNI2. For FM sound radio signals the same method can be used, but in this case, the noise bandwidth to be taken is 200 kHz. The test method for digitally modulated carriers ($S_{D,RF}/N$), given in 4.11.4 for system outlets, is applicable also to HNI2.

The values given in Table 37 assume that the random noise contribution of the active network shall be such that the *C/N* measured at any system outlet, with an unimpaired signal at the input of the home network, is higher than 51 dB (*BW* = 4,75 MHz for PAL) in the VHF/UHF

Copyright International Electrotechnical Commission
Provided by IHS under license with IEC
No reproduction or networking permitted without license from IHS Not for Resale

bands (47 MHz to 862 MHz) and higher than 29 dB in the 1st IF band (950 MHz to 2 150 MHz).

For VHF/UHF the system outlet level shall always be at least 60 dB(µV).

Table 37 – Carrier-to-noise ratios at HNI2 (television)

Systems	Modulation		Minimum carrier-to-noise ratio *C/N* dB	Minimum RF signal-to-noise ratio $S_{D,RF}/N$ dB				Equivalent noise bandwidth *BW* MHz
I	AM-VSB		45					5,08
B, G, D1			45					4,75
L			45,5 [a]					5,00
D, K			45					5,75
NTSC			44					4,00
M			43					u.c.
PAL, SECAM	FM		15,2					27
NTSC	FM		14,2					
DVB-S	QPSK	Code rate 1/2 2/3 3/4 5/6 7/8		10,9 12,8 13,9 14,9 15,6				Independent of bandwidth
DVB-S2	QPSK 8PSK 16APSK 32APSK [d]	Code rate 1/4 1/3 2/5 1/2 3/5 2/3 3/4 4/5 5/6 8/9 9/10		QPSK 6,0 7,1 8,0 9,3 10,6 11,4 12,3 13,0 13,5 14,5 14,7	8PSK - - - - 13,8 14,9 16,2 - 17,7 19,0 19,3	16APK - - - - - 17,3 18,5 19,4 19,9 21,2 21,5	32APK - - - - - - 21,1 22,0 22,6 24,0 24,4	Independent of bandwidth
DVB-C	16 QAM 64 QAM 256 QAM			23 [b] 29 [b] 35 [b]				Independent of bandwidth
DVB-T COFDM	QPSK [c]	Code rate 1/2 2/3 3/4 5/6 7/8		2 k mode 11 14 16 19 22		8 k mode 12 15 17 20 23		Independent of bandwidth
	16 QAM [c]	Code rate 1/2 2/3 3/4 5/6 7/8		2 k mode 19 22 24 27 29		8 k mode 20 23 25 27 30		Independent of bandwidth
	64 QAM [c]	Code rate 1/2 2/3 3/4 5/6 7/8		2 k mode 23 27 29 31 33		8 k mode 24 28 30 32 34		Independent of bandwidth

--`,,```,,,,````-`-`,,`,,`,`,,`---

Copyright International Electrotechnical Commission
Provided by IHS under license with IEC
No reproduction or networking permitted without license from IHS Not for Resale

Table 37 *(continued)*

[a] This value is consistent with the HNI1 specification for the (worst) case of 57 dB(μV) at system outlet; the minimum level at the system outlet for the case of the active coaxial home network shall be at least 60 dB(μV), and a minimum level of 63 dB(μV) at system outlet is strongly recommended.

[b] The above values take into account simultaneous distribution of analogue and digital signals. These values assume that intermodulation noise is not present or can be neglected and a *BER* of 10^{-4} before Reed-Solomon decoder is achieved

[c] These values take into account white noise and impulse noise..

[d] These values are calculated according to ETSI EN 302 307) document, Tables 13 and H.1, and are intended for a *PER* of 10^{-7} after LDPC and BCH decoders.

Table 38 – Carrier-to-noise ratios at HNI2 (radio)

Systems	Modulation	Minimum carrier-to-noise ratio dB	Equivalent noise bandwidth *BW* MHz
Mono	FM	39 (PAL-, SECAM-countries) 42 (NTSC countries)	0,2
Stereo	FM	50 (PAL-, SECAM-countries) 53 (NTSC countries)	0,2

If the minimum carrier levels at system outlet of the home network for AM-VSB modulated signals are increased to 66 dB(μV), then the system outlet carrier-to-noise ratios are applicable also to HNI2.

7.3.6 Interference to television channels at the HNI2

7.3.6.1 Single-frequency interference at the HNI2

This subclause refers to single-frequency interference, which may result from intermodulation or the presence of other interfering signals (for example, local oscillators, ingress signals). At the HNI2 the level of any unwanted signal within the system shall be such that the lowest carrier-to-interference ratio within a wanted television channel shall be not less than

- 59 dB for AM signals,
- 35 dB for FM signals,
- 37 dB for DVB-64 QAM signals,
- 14 dB for DVB-QPSK signals,
- under consideration for DVB-16 QAM and -256 QAM.

Where a frequency assignment, taking account of known future off-air and distributed channels, is adopted so that interference signals fall only in the less sensitive areas of the television channel spectrum, a limit lower than that given above is acceptable (see curves given in Figure 15 to Figure 18). The test methods given in 4.5.2 for system outlets are applicable also to HNI2.

The values given above assume that the intermodulation contribution of the active coaxial home network shall be such that the *C/I* measured within a wanted television channel at any

--`,,```,,,,````-`-`,,`,,`,`,,`---
Copyright International Electrotechnical Commission
Provided by IHS under license with IEC
No reproduction or networking permitted without license from IHS Not for Resale

outlet, with an unimpaired signal at the input of the home network, is higher than 71 dB for AM-VSB signals in the VHF/UHF bands (47 MHz to 862 MHz) and higher than 32 dB in the 1st IF band (950 MHz to 2 150 MHz).

NOTE 1 If the intermodulation contribution of the active network is higher than 76 dB in the VHF/UHF bands (47 MHz to 862 MHz) and higher than 35 dB in the 1st IF band (950 MHz to 2 150 MHz), the above values of carrier-to-interference ratio can be decreased by 1 dB.

NOTE 2 Special precautions may be needed when the dual sound channel is carried in a lower adjacent channel to avoid interference between the additional sub carrier and the lower vestigial sideband of the adjacent channel.

7.3.6.2 Single-channel intermodulation interference at the HNI2

In this special case of single frequency interference, the ratio of the reference level relative to the interference signal shall be not less than 56 dB.

NOTE This subclause does not apply to television channels carrying DVB signals.

7.3.6.3 Multiple frequency intermodulation interference at the HNI2

At the HNI2, the level of the multiple frequency intermodulation interference, in any wanted television channel, shall be such that the carrier-to-interference ratio shall be not less than

- 59 dB for each cluster of composite beats in negative modulation,
- 53 dB for each cluster of composite beats in positive modulation and 51 dB for the weighted sum of beats,
- 54 dB for negative modulation and 52 dB for positive modulation for the summed clusters, calculated according to the method of measurement given in 4.5.3 for system outlets and applicable also to HNI2,
- 39 dB for the sum of all clusters falling within a DVB – 64 QAM channel,
- 15 dB for DVB-QPSK,
- under consideration for FM television, DVB-OFDM and DVB-256 QAM.

The values given above assume that the intermodulation contribution of the active coaxial home network shall be such that the carrier-to-multiple-frequency interference, in any wanted television channel, measured at any outlet, with an unimpaired signal at the input of the home network, is higher than 71 dB in the VHF/UHF bands (47 MHz to 862 MHz) and higher than 32 dB in the 1st IF band (950 MHz to 2 150 MHz).

NOTE 1 If the intermodulation contribution of the active network is higher than 76 dB in the VHF/UHF bands (47 MHz to 862 MHz) and higher than 35 dB in the 1st IF band (950 MHz to 2 150 MHz), the above values of carrier-to-interference ratio can be decreased by 1 dB.

NOTE 2 When coherent carriers are used lower limits are acceptable.

NOTE 3 Because intermodulation products between multiple, closely spaced, digital TV channels are similar to random noise, this intermodulation should be taken into account in the carrier-to-noise measurements.

7.3.6.4 Crossmodulation at the HNI2

Under consideration.

7.3.7 Return path requirements at the HNI2

The return path requirements at HNI2 shall be defined in accordance with the requirements of IEC 60728-10. The HNI2 is taken as an additional reference point for the return path while the other reference point is located at the input of the return signal receiver (transceiver).

The requirements at HNI2 are under consideration.

--`,,```,,,,````-`-`,,`,,`,`,,`---

Copyright International Electrotechnical Commission
Provided by IHS under license with IEC
No reproduction or networking permitted without license from IHS Not for Resale

7.4 Requirements at HNI3 and at system outlet or terminal input when the home network is mainly of balanced type

7.4.1 Introduction

There are two different types of home networks made mainly of balanced type pair cables:

- Case A with a balanced pair connector at the system outlet and an external transformer device (balun: balanced to unbalanced transformer) terminated on the coaxial receiver input (Figure 43 – HNI3 case A);
- Case B with a coaxial outlet and a coaxial receiver lead complying with IEC 60966-2-4, IEC 60966-2-5 and IEC 60966-2-6 (Figure 43 – HNI3 case B).

In the four-pair cables, the pair (7,8) is reserved for television and interactive services in the HF, VHF and UHF bands.

In Case A FM radio may be delivered on pairs other than the pair (7,8) of the four-pair cables on a balanced 100 Ω interface.

In case A with four-pair cables, some of the pairs may be used for monitoring the load and the RF carrier levels (for example, with a coupler feeding the upstream on pairs 3-6 and a DC loop back on pair 4-5); detailed specifications of those systems are under consideration.

7.4.2 Requirements at HNI3

All requirements set for HNI2 apply also to HNI3; additional requirements at HNI3 for upstream transmission can be found in 7.4.4.

The values in Table 37 assume that, in the VHF/UHF bands (47 MHz to 862 MHz), the random noise contribution of the active network including all crosstalk effects shall be such that at any terminal input or system outlet, with an unimpaired signal at the input of the home network, the *C/N* measured is higher than 51 dB (noise bandwidth = 4,75 MHz for PAL) and the carrier-to-multiple-frequency interference is higher than 71 dB.

Return loss requirements are, on both sides of the HNI3 (i.e. in the downstream and upstream sense), 14 dB from 5 MHz to 65 MHz, 12 dB from 120 MHz to 470 MHz and 10 dB from 470 MHz to 862 MHz.

7.4.3 Requirements at system output

The performance requirements according to clause 5 of this standard apply also at the coaxial system outlet (Figure 43 – HNI3 case B) or at the coaxial terminal input (Figure 43 – HNI3 case A) except the minimum signal levels, which are defined in Table 39.

Table 39 – Minimum signal level at coaxial terminal input (case A) or at coaxial system outlet (case B)

Service	System	Modulation	Case A	Case B
Television	PAL/SECAM	AM-VSB	60 dB(μV)	61 dB(μV)
	DVB-C	64 QAM	47 dB(μV)	48 dB(μV)
	DVB-C	256 QAM	54 dB(μV)	55 dB(μV)
	DVB-T		45 dB(μV)	46 dB(μV)
Radio	stereo	FM	50 dB(μV)	51 dB(μV)
	DAB		u.c.	u.c.

Copyright International Electrotechnical Commission
Provided by IHS under license with IEC
No reproduction or networking permitted without license from IHS Not for Resale

Return loss requirements are 14 dB from 5 MHz to 65 MHz, 12 dB from 120 MHz to 470 MHz and 10 dB from 470 MHz to 862 MHz.

In the case of home networks with balanced pair cabling, all kinds of crosstalk (NEXT, FEXT, exogenous crosstalk) are included in the relevant requirements of carrier-to-noise, carrier-to-spurious, carrier-to-interference or carier-to-composite beats (for example, the *C/N* requirement of 51 dB could be divided between the amplifier and the crosstalk, with a requirement of 54 dB for each of them).

NOTE 1 The requirement on signal levels is designed to reduce the overall contribution to noise of the terminal receiver; revision of the *C/N* requirement is under consideration.

NOTE 2 This requirement on noise, with known cat6 and cat7 (class E and class F) specifications prohibit simultaneous use of two pairs for Ethernet 10/100BaseT and of pairs 7-8 for HF, VHF and UHF television sound and interactive services, unless system output levels are near the maximum permitted output levels.

It is reminded that on lengths of cables of some metres or tens of metres, the effect of near-end crosstalk is quite significantly enhanced in VHF by a variety of cases like impedance mismatches and FEXT.

7.4.4 Additional requirements at HNI3 for upstream transmission

Upstream transmission from the system outlet shall be unimpaired, and the DOCSIS/Euro DOCSIS requirement of 72 dB carrier to spurious shall be met at HNI3, despite all kinds of crosstalk.

NOTE This requirement on noise and spurious may prohibit simultaneous use of two pairs for Ethernet 10/100BaseT and of pairs 7-8 for HF, VHF and UHF television sound and interactive services with upstream in the 5 MHz to 65 MHz band.

7.5 Requirements at HNI3 (Case C)

This home network uses optical fibres. The first electrical-to-optical (E/O) interface is placed at the HNI3 and others in the reverse direction, optical-to-electrical (O/E), are present at each place where the terminal equipment is connected.

The requirements indicated for HNI2 in respect to the electrical signal level and the other quality parameter (carrier level differences, frequency response, random noise, interference to television channels, etc.), apply also for HNI3, Case C.

The requirements at system outlet, laid down in clause 5 of this standard apply also at system outlets of home networks incorporating fibre optic transmission (Case C).

7.6 Requirements at HNI3 (Case D)

This home network uses many types of link to carry signals up to the digital audio/video and data input of the terminal equipment. This case D needs a terminating box (NTU) after the HNI.

The requirements indicated for HNI2 in respect to the electrical signal level and the other quality parameter (carrier level differences, frequency response, random noise, interference to television channels, etc.), apply also for HNI3, Case D.

The requirements at the video/audio and data interfaces are under consideration.

--`,,```,,,,````-`-`,,`,,`,`,,`---

Copyright International Electrotechnical Commission
Provided by IHS under license with IEC
No reproduction or networking permitted without license from IHS Not for Resale

Annex A
(normative)

Calibration of modulation depth

A.1 Equipment required

- A signal generator, G_2, capable of being tuned to within about 10 MHz of the test frequency.
- A balanced wideband mixer suitable for the test frequencies.
- An oscilloscope suitable for a frequency of around 10 MHz.
- A low-pass filter with a cut-off frequency of about 15 MHz if required.

A.2 Connection of the equipment

The equipment shall be connected as in Figure A.1.

A.3 Calibration procedure

- Set the signal generator G_1 to the test frequency f_1 and the modulation of the carrier to an indicated depth of 10 %.
- Set the signal generator G_2 to f_1 ± 10 MHz.
- Adjust the attenuator to ensure correct operation of the mixer and a convenient display on the oscilloscope.

The actual modulation depth is then determined from the oscilloscope display; if necessary, the modulation depth is then readjusted to the required 10 % and the calibration correction noted.

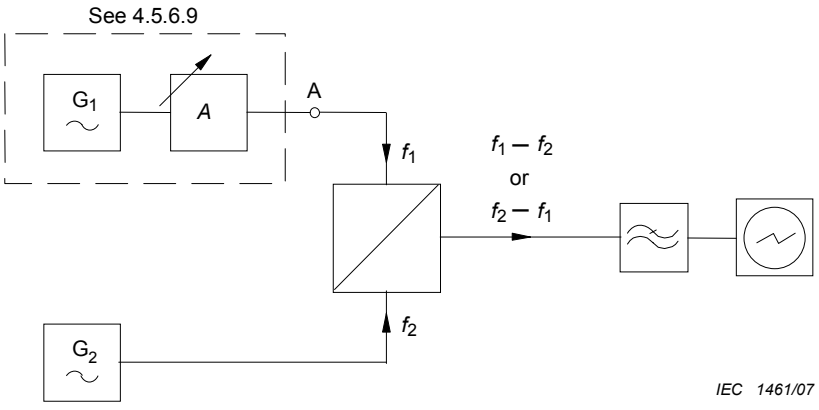

Figure A.1 – Calibration of modulation depth

--`,,```,,,,````-`-`,,`,,`,`,,`---

Copyright International Electrotechnical Commission
Provided by IHS under license with IEC
No reproduction or networking permitted without license from IHS Not for Resale

Annex B
(normative)

Equipment required – Additional items

B.1 Measuring receiver preamplifier

If the sensitivity of the measuring receiver is not adequate for the levels of noise expected at the point of measurement, a suitable preamplifier of the correct input impedance and flat response over the channel to be measured will be necessary. This preamplifier should be included as part of the measuring equipment when making the checks described in Annex C.

B.2 Measuring receiver input filter

If the selectivity of the measuring receiver is not adequate to reduce to an insignificant level the effects of "out-of-channel" signals on the measurement of the noise voltage, a suitable filter having a flat response over the channel to be measured will be required as shown in Figure 28.

In this case, it is important that the matching between the filter and the preceding equipment shall be such that it results in a return loss ratio of not less than 20 dB within the frequency range of the channel to be measured, and that the whole measuring equipment shall satisfy all the requirements of Annex C.

Where this is in doubt, an attenuator of sufficient value to satisfy this requirement should be included as shown in Figure 28.

Copyright International Electrotechnical Commission
Provided by IHS under license with IEC
No reproduction or networking permitted without license from IHS Not for Resale

Annex C
(normative)

Preliminary checks on the measuring equipment for carrier-to-noise ratio

C.1 Noise

With the input to the measuring equipment terminated and the variable attenuator set to zero, tune the measuring receiver over the frequency range of interest and check that the reading remains negligible relative to that expected when measuring the system noise.

C.2 Intermodulation

Connect signals, corresponding to those, which will be present at the point of measurement, via a matched directional coupler, to the measuring equipment. Tune the meter to any significant intermodulation products and note the lowest value of the signal/intermodulation ratio within the channel being considered.

This ratio should exceed the minimum carrier-to-noise ratio expected at the point of measurement by an amount relevant to the accuracy desired. For example, 20 dB would result in an error of less than 1 dB.

If this requirement is not met, an appropriate channel pass-band filter to attenuate one of the signals should be included as indicated in Figure 28, and the checks indicated in Clauses C.1 and C.2 should be repeated.

NOTE This check relating to intermodulation is necessary only if automatic level control (ALC) pilot signals or other signals are present during the carrier-to-noise ratio tests.

C.3 Overload

Connect signals as in Clause C.2 and attenuate one of them to a level comparable with that of the noise voltage expected at the point of measurement. Tune the meter to the low-level signal. Tune the low-level signal and the meter in step over the frequency range of the channel to be measured and check that the meter reading does not change when the high-level signals are switched off and on.

If this requirement is not met, a filter to attenuate one or more of the signals should be included as indicated in Figure 28 and all the above checks should be repeated as mentioned in Clause C.2.

Copyright International Electrotechnical Commission
Provided by IHS under license with IEC
No reproduction or networking permitted without license from IHS Not for Resale

Annex D
(normative)

Correction factors

D.1 Level correction factor C_m

If a measuring receiver responding to the average value of the applied voltage but calibrated in RMS values (assuming a sinusoidal input signal) is employed, it will indicate a level approximately 1 dB below the RMS value of the applied noise voltage in its noise bandwidth. In this instance C_m may be taken as 1 dB.

If a measuring receiver of the peak reading type is used, a correction appropriate to the particular instrument shall be employed as C_m.

D.2 Bandwidth correction factor C_b

This correction factor takes into account the difference between the noise bandwidth of the measuring receiver B_m and that of the appropriate television system B_{TV}

$$C_b = 10 \lg \frac{B_{TV}}{B_m} \qquad \text{in dB}$$

Copyright International Electrotechnical Commission
Provided by IHS under license with IEC
No reproduction or networking permitted without license from IHS Not for Resale

Annex E
(normative)

Calibration of the measuring receiver

E.1 Noise bandwidth (B_m)

A well-matched noise generator is required, having a known bandwidth B_g (see NOTE 1) much higher than the bandwidth of the receiver to be calibrated, and an output voltage of known RMS value U_g sufficient to give a convenient reading on the measuring receiver.

The measuring receiver is connected to the noise generator (see NOTE 2) and tuned to a test frequency within the noise bandwidth of the noise generator. The true RMS voltage U_m is measured (see Annex D). The noise bandwidth of the measuring receiver B_m is given by

$$B_m = B_g \, (U_m/U_g)^2$$

where

B_m and B_g are in the same units, for example, megahertz;

U_m and U_g are in the same units, for example, microvolts.

This procedure is repeated at each test frequency.

NOTE 1 B_g will usually be taken as 1 MHz and U_g is calculated for this bandwidth from information provided by the manufacturer of the noise generator.

NOTE 2 The noise generator may consist of a noise diode source followed by an appropriate amplifier.

--`,,```,,,,````-`-`,,`,,`,`,,`---

Copyright International Electrotechnical Commission
Provided by IHS under license with IEC
No reproduction or networking permitted without license from IHS Not for Resale

Annex F
(normative)

Correction factors for noise

F.1 Signal level measurement

When measuring a signal level, the contribution of noise can be taken into account by reducing the measured signal level S_m by an amount *CF* that depends on the difference *D* between the measured signal S_m and noise N_m levels.

Firstly calculate the difference *D*:

$$D = S_m - N_m$$

then from Table F.1 or Figure F.1 derive the correction factor *CF* and apply it to obtain the signal level *S* using the following formula:

$$S = S_m - CF$$

F.2 Noise level measurement

When measuring a noise level, the contribution of the measuring equipment noise can be taken into account by reducing the measured noise level by an amount given by the correction factor *CF* indicated in Table F.1 and in Figure F.1, that depends on the difference *D* between the noise level N_m measured when the measuring equipment is connected to the system or equipment under test and the N_{EUT} measured when the input of the measuring equipment is terminated on its characteristic impedance.

Firstly, calculate the difference *D*:

$$D = N_m - N_{EUT}$$

then from Table F.1 or Figure F.1 derive the correction factor *CF* and apply it to obtain the noise level *N* using the following formula:

$$N = N_m - CF$$

NOTE If the level difference *D* is lower than 2 dB, the reliability of the measurement becomes very low due to the big value of the correction factor *CF*.

Table F.1 – Noise correction factor

Level difference *D* dB	**Correction factor *CF*** dB	**Level difference *D*** dB	**Correction factor *CF*** dB
1,5	5,35	6,0	1,26
2,0	4,33	7,0	0,97
3,0	3,02	8,0	0,75
4,0	2,20	9,0	0,58
5,0	1,65	10,0	0,46

Copyright International Electrotechnical Commission
Provided by IHS under license with IEC
No reproduction or networking permitted without license from IHS Not for Resale

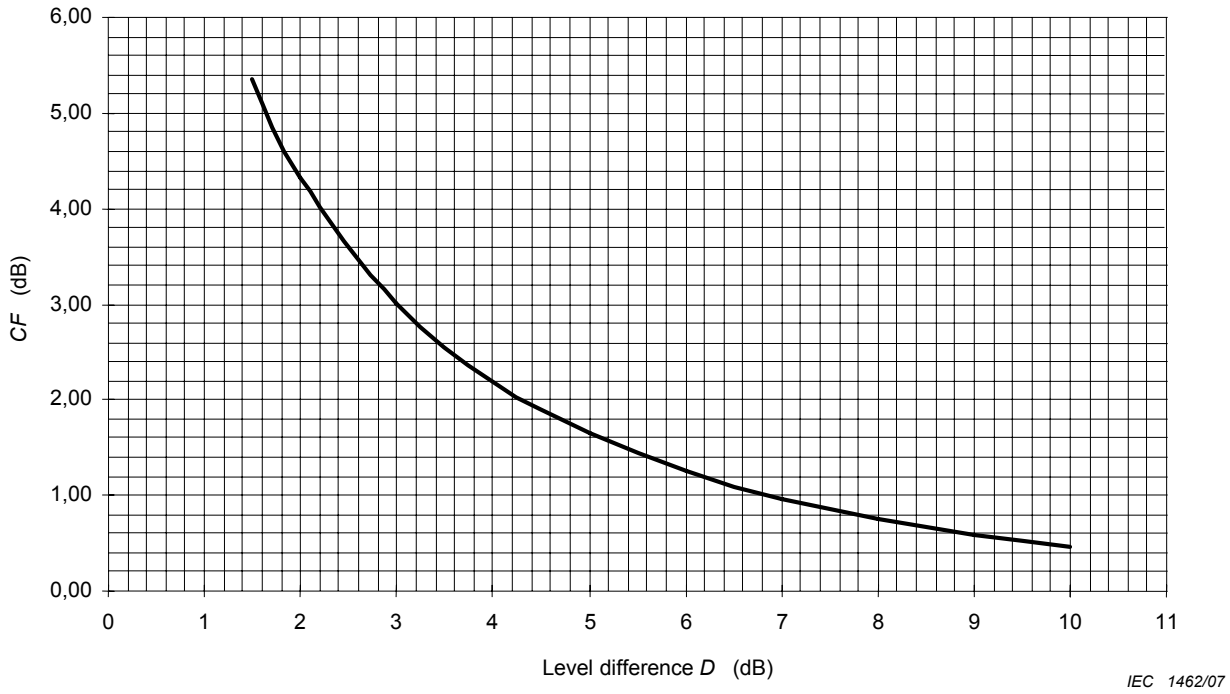

Figure F.1 – Noise correction factor *CF* versus measured level difference *D*

Copyright International Electrotechnical Commission
Provided by IHS under license with IEC
No reproduction or networking permitted without license from IHS
Not for Resale

Annex G
(normative)

Null packet and PRBS definitions

G.1 Null packet definition

The null packet definition from ISO/IEC 13818-1 is extended for the purpose of the recommended test mode.

ISO/IEC 13818-1 defines a null transport stream packet for the purpose of data rate stuffing.

Table G.1 shows the structure of a null transport stream packet using the method of describing bit stream syntax defined in 2.3 of ISO/IEC 13818-1.

This description is derived from Table 2-2 in ISO/IEC 13818-1. The abbreviation "bslbf" means "bit string, left bit first", and "uimsbf" means "unsigned integer, most significant bit first".

The column titled "Value", gives the bit sequence for the recommended null packet.

A null packet is defined by ISO/IEC 13818-1 as having:

- **payload_unit_start_indicator** = '0';
- **PID** = 0x1FFF;
- **transport_scrambling_control** = '00';
- **adaptation_field_control** value = '01'. This corresponds to the case "no adaptation field, payload only".

The remaining fields in the null packet that shall be defined for testing purposes are:

- **transport_error_indicator** which is '0' unless the packet is corrupted: for testing purposes this bit is defined as '0' when the packet is generated;
- **transport_priority** which is not defined by ISO/IEC 13818-1 for null packet. For testing purposes this bit is defined as '0';
- **continuity_counter** which ISO/IEC 13818-1 states is undefined for a null packet. For testing purposes this bit field is defined as '0000';
- **data_byte** which ISO/IEC 13818-1 states may have any value in a null packet. For testing purposes this bit field is defined as '00000000'.

--`,,```,,,,````-`-`,,`,,`,`,,`---

Copyright International Electrotechnical Commission
Provided by IHS under license with IEC
No reproduction or networking permitted without license from IHS Not for Resale

Table G.1 – Null transport stream packet definition

Syntax	No of bits	Identifier	Value
null_transport_packet(){			
sync_byte	8	bslbf	'01000111'
transport_error_indicator	1	bslbf	'0'
payload_unit_start_indicator	1	bslbf	'0'
transport_priority	1	bslbf	'0'
PID	13	uimsbf	'1111111111111'
transport_scrambling_control	2	bslbf	'00'
adaptation_field_control	2	bslbf	'01'
continuity_counter	4	uimsbf	'0000'
for (i=0;i<N;i++){**data_byte**}	8	bslbf	'00000000'
}			

G.2 PRBS definition

A PRBS (pseudo random bit sequence) generator can be used instead of a null packet generator. A PRBS of 10^{23}–1 inverted is recommended.

Copyright International Electrotechnical Commission
Provided by IHS under license with IEC
No reproduction or networking permitted without license from IHS Not for Resale

Annex H
(normative)

Digital signal level and bandwidth

H.1 RF/IF power ("carrier")

When describing the QAM signals employed by DVB-C or the QPSK signals employed by DVB-S, it is common to refer to the modulated RF/IF signal as "carrier" *C*, mainly to distinguish it from "signal" *S* which is generally used to refer to the baseband demodulated signal.

Strictly, it is incorrect to describe this signal as "carrier" because QAM and QPSK (which is equivalent to 4-state QAM) are suppressed carrier modulation schemes. For OFDM, with thousands of suppressed carriers and assorted pilot tones, the label "carrier" is even more inappropriate.

Therefore, the term "wanted information power" should be more appropriately used to consider the "RF/IF power" in the transmitted channel, but most of the engineers and technical people involved in CATV work will continue to use the term "carrier" for this parameter, particularly when talking about the "carrier"-to-noise ratio.

The "carrier", or the "RF/IF power", is the total power of the modulated RF/IF signal as would be measured by a thermal power sensor in the absence of any other signals (including noise).

If the measuring set is able to measure the power in a small part of the channel spectrum, the total power can be obtained taking into account the bandwidth of the channel or what is called "equivalent signal bandwidth" of the digital channel.

H.2 Bandwidth of a digital signal

H.2.1 Occupied bandwidth

a) QAM/PSK modulation

For DVB systems using the QAM/PSK modulation the passband spectrum is shaped by root raised cosine filtering with a roll-off factor (α) of

- 0,15 for DVB-C systems (QAM),
- 0,18 (ITU-T J.83, Annex B) USA (QAM),
- 0,13 (ITU-T J.83, Annex C) Japan (QAM),
- 0,35 for DVB-S systems (QPSK).

For an ideal QAM/PSK system, this means that all the RF/IF power will lie in the frequency band

$$f_C \pm (1 + \alpha) \cdot f_S / 2$$

where

f_C is the carrier frequency;

Copyright International Electrotechnical Commission
Provided by IHS under license with IEC
No reproduction or networking permitted without license from IHS Not for Resale

f_S is the symbol rate of the modulation;

α is the filter roll-off factor.

This means that the occupied bandwidth is given by the formula:

$$BW_{OCC(QAM/PSK)} = (1 + \alpha)\, f_S \qquad \text{(H.1)}$$

The RF/IF power (or "carrier") is the total power in this "rectangular" bandwidth, with no further filtering applied. This bandwidth is used for defining the channel width, the transponder bandwidth and so on. The formula above can be used to obtain the useable symbol rate in a given channel bandwidth:

$$f_S = BW_{OCC}/(1 + \alpha).$$

b) OFDM modulation

For DVB systems using OFDM modulation the definition of occupied bandwidth is expressed differently because of the radically different modulation technique, although the principle is very similar. The OFDM "shoulders" are not considered to be wanted information power, and are not included in the RF/IF power calculation, even though the power does actually come out of the transmitter:

$$BW_{OCC(OFDM)} = n \cdot f_{SPACING} \qquad \text{(H.2)}$$

where

n = 6 817 (8 k mode) and $f_{SPACING}$ = 1 116 Hz (8 k mode) (DVB-T)

n = 1 705 (2 k mode) and $f_{SPACING}$ = 4 464 Hz (2 k mode) (DVB-T)

n = 5 617 (mode 3) and $f_{SPACING}$ = 992 Hz (mode 3) (ISDB-T) Japan

n = 2 809 (mode 2) and $f_{SPACING}$ = 1 984 Hz (mode 2) (ISDB-T) Japan

n = 1 405 (mode 1) and $f_{SPACING}$ = 3 968 Hz (mode 1) (ISDB-T) Japan.

In a multi-signal system (for example, a CATV network) measurement of the RF/IF power in a single channel requires a frequency selective technique. This could employ a thermal power meter preceded by a suitably calibrated channel filter, a spectrum analyser with band power measurement capability, or a measuring receiver. Depending on the measurement technique, a filter may be required to exclude the "shoulders" of a single OFDM signal.

H.2.2 Noise bandwidth

The transmission of digitally modulated signals employs a Nyquist filtering split equally between the transmitter and receiver.

a) QAM/PSK modulation

The noise bandwidth of the receiver equals the symbol rate f_S. This is considered to be appropriate for *C*/*N* measurements of digital TV systems since this reflects the amount of noise entering the receiver. This leads to the following formula:

$$BW_{NOISE(QAM/PSK)} = f_S \qquad \text{(H.3)}$$

b) OFDM modulation

Copyright International Electrotechnical Commission
Provided by IHS under license with IEC
No reproduction or networking permitted without license from IHS Not for Resale

Because the OFDM "shoulders" are not considered to be wanted information power, the noise bandwidth can be assumed to equal the occupied bandwidth:

$$BW_{NOISE(OFDM)} = BW_{OCC(OFDM)} \quad \text{(H.4)}$$

H.2.3 Equivalent signal bandwidth

The transmission of digitally modulated signals employs a Nyquist filtering split equally between the transmitter and receiver; therefore, the RF/IF channel bandwidth (transmitter bandwidth) has a –3 dB bandwidth that is equal to the receiver bandwidth.

a) QAM/PSK modulation

The "equivalent signal bandwidth" *BW* (–3 dB bandwidth) is equal to the receiver noise bandwidth for QAM/PSK modulation:

$$BW_{(QAM/PSK)} = f_S \quad \text{(H.5)}$$

b) OFDM modulation

Because the OFDM "shoulders" are not considered to be wanted information power, the "equivalent signal bandwidth" *BW* (–3 dB bandwidth) can be assumed to be equal to the occupied bandwidth for OFDM modulation:

$$BW_{(OFDM)} = BW_{OCC(OFDM)} \quad \text{(H.6)}$$

H.3 Examples

In Table H.1, examples for the "occupied bandwidth" or "channel bandwidth", the "noise bandwidth" and the "equivalent signal bandwidth" for the QAM, PSK and OFDM modulation techniques are indicated.

Table H.1 – Examples of bandwidths for digital modulation techniques

Digital modulation	Roll-off factor	Occupied or channel bandwidth	Noise bandwidth	Equivalent signal bandwidth
	α	BW_{OCC}	BW_{NOISE}	BW
		MHz	MHz	MHz
QPSK (DVB-S)	0,35	37,125	27,5	27,5
TC8PSK (Japan)	0,35	34,5	28,860	28,860
QPSK, 8PSK, 16APSK, 32APSK (DVB-S2)	0,35	37,125	27,5	27,5
	0,25	37,125	29,7	29,7
	0,20	37,125	30,9375	30,9375
QAM (DVB-C)	0,15	8	6,95	6,95
		7	6,09	6,09
64Q AM (Japan)	0,13	6	5,274	5,274
COFDM (DVB-T)	-	8	7,61	7,61
	–	7	6,66	6,66
OFDM (ISDB-T) (Japan)	–	6	5,572 (mode3)	5,572 (mode 3)

Copyright International Electrotechnical Commission
Provided by IHS under license with IEC
No reproduction or networking permitted without license from IHS Not for Resale

Annex I
(normative)

Correction factor for a spectrum analyser

The correction factor (K_{sa}) for a typical spectrum analyser is about 1,7 dB and is due to two contributions:

- a +2,5 dB term for the effect of the detector/log amplifier (it accounts for the correction of 1,05 dB due to the narrowband envelope detection and the 1,45 dB due to the logarithmic amplifier);
- a –0,8 dB term that takes into account that the equivalent noise bandwidth of the IF filter of the spectrum analyser is greater than its nominal resolution bandwidth RSBW by a factor of 1,2.

Copyright International Electrotechnical Commission
Provided by IHS under license with IEC
No reproduction or networking permitted without license from IHS Not for Resale

Annex J
(informative)

Differences in some countries

J.1 Subclause 3.1.52, Norway

According to Regulations on Electronic Communications Networks and Services (Ecom Regulations) laid down by the Norwegian Ministry of Transport and Communications on 16 February 2004, the following apply:

When installing coaxial cable-based networks, the part of the network to which the end-user is connected shall be placed in a star structure. It is not permitted to insert receiver connections into the connection between the star points.

J.2 Subclause 5.4.1, Japan, Netherlands

J.2.1 Japan

Replace by/add the following “minimum and maximum carrier levels” regulation:

AM-VSB television	60 dB(μV)$_{min}$ 85 dB(μV)$_{max}$
FM sound mono or stereo	50 dB(μV)$_{min}$ 75 dB(μV)$_{max}$
FM NTSC television	57 dB(μV)$_{min}$
FM HDTV (1 035 MHz~1 335 MHz)	57 dB(μV)$_{min}$
AM HDTV	65 dB(μV)$_{min}$ 85 dB(μV)$_{max}$
64Q AM digital TV	53 dB(μV)$_{min}$ 85 dB(μV)$_{max}$
Upper CH adjacent to AM-VSB television	53 dB(μV)$_{min}$ 81 dB(μV)$_{max}$
Lower CH adjacent to AM-VSB television	53 dB(μV)$_{min}$ 79 dB(μV)$_{max}$
DVB-C 16 QAM VHF/UHF	u.c.(min),u.c.(max)
DVB-C 256 QAM VHF/UHF	u.c.(min),u.c.(max)
DVB-T 64 QAM code rate 2/3	u.c.(min),u.c.(max)
DVB-T 16 QAM code rate 3/4	u.c.(min),u.c.(max)

Copyright International Electrotechnical Commission
Provided by IHS under license with IEC
No reproduction or networking permitted without license from IHS Not for Resale

J.2.2 Netherlands

Replace by/add the following “minimum and maximum carrier levels” regulation:

FM sound mono:	80 dB(μV)$_{max}$

(measured in accordance with CISPR 16-1 [4] (quasi-peak measurement within 120 kHz bandwidth))

J.3 Subclause 5.4.2, Japan

Replace by/add the following “carrier level differences” regulation:

AM-VSB television	Not more than 10 dB (not more than 3 dB between adjacent channels)
Sound carrier to vision carrier	–3 to –14 dB (–9 dB to –14 dB between adjacent channels)
FM FM carrier to AM-VSB	Not more than 10 dB Not more than –10 dB
FM NTSC	Not more than 6 dB
FM HDTV	Not more than 6 dB
AM HDTV	Not more than 3 dB between adjacent channels
64 QAM carrier to AM-VSB	
Upper CH adjacent to AM-VSB	–4 dB to –18 dB
Lower CH adjacent to AM-VSB	–6 dB to –20 dB

J.4 Subclause 5.5.1, Japan

Replace by /add the following “isolation between two subscribers” regulation:

TV/TV (mutual isolation of a subscriber tap)	Not less than 25 dB
TV/FM (in the case of FM filter use)	Not less than 35 dB

J.5 Subclause 5.6.1, Japan

Replace by/add the following “amplitude response” regulation:

For an RF outlet and		
NTSC channels	–0,5 MHz~4 MHz	–3 dB to +4 dB
64 QAM digital channels	bandwidth 5,274 MHz	±3 dB
FM television		u.c.

--`,,```,,,,````-`-`,,`,,`,`,,`---

Copyright International Electrotechnical Commission
Provided by IHS under license with IEC
No reproduction or networking permitted without license from IHS Not for Resale

J.6 Subclause 5.6.2, Netherlands

Add the group delay response curve valid for PAL with FM-FM sound (Clause J.2).

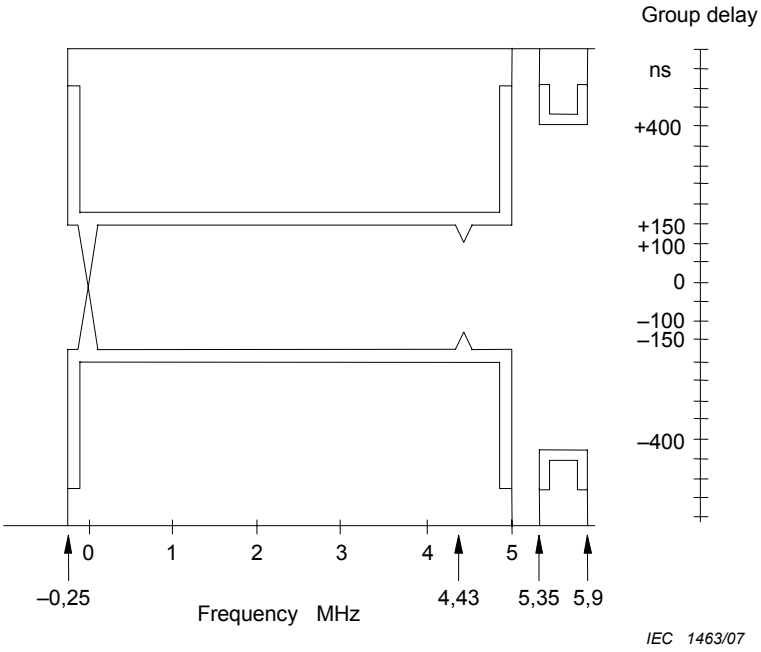

Figure J.1 – Mask group delay characteristic for PAL signals with FM-FM sound (Netherlands)

J.7 Subclause 5.7, Japan

Replace by/add the following “frequency stability” regulation:

AM-VSB television	±20 kHz
Between vision carrier and sound carrier	±2 kHz
FM	±20 kHz
64 QAM digital (DVB-C) QPSK digital (DVB-S) OFDM (Japan)	±20 kHz u.c. u.c.

Copyright International Electrotechnical Commission
Provided by IHS under license with IEC
No reproduction or networking permitted without license from IHS Not for Resale

J.8 Subclause 5.8, Japan

Replace by/add the following "system outlet specification".

Type of service	Systems	Modulation	Minimum carrier-to-noise ratio (*C/N*) dB	Minimum RF signal to noise ratio (*S/N*) dB	Equivalent noise bandwidth (*BW*) MHz
Television	NTSC	AM-VSB	40		4,0
	DVB-C	64 QAM		26	5,3
	ISDB-T	OFDM		24	5,6
NOTE Above values specify the specification at System outlet only.					

J.9 Subclause 5.9.1, Japan, Netherlands

J.9.1 Japan

Replace by/add the following “single-frequency interference” regulation:

VSB-AM NTSC	Not less than 50 dB	see Figure J.2
VSB-AM HDTV	Not more than –60 dB	see Figure J.3
64 QAM digital	Not more than –30 dB	see Figure J.4

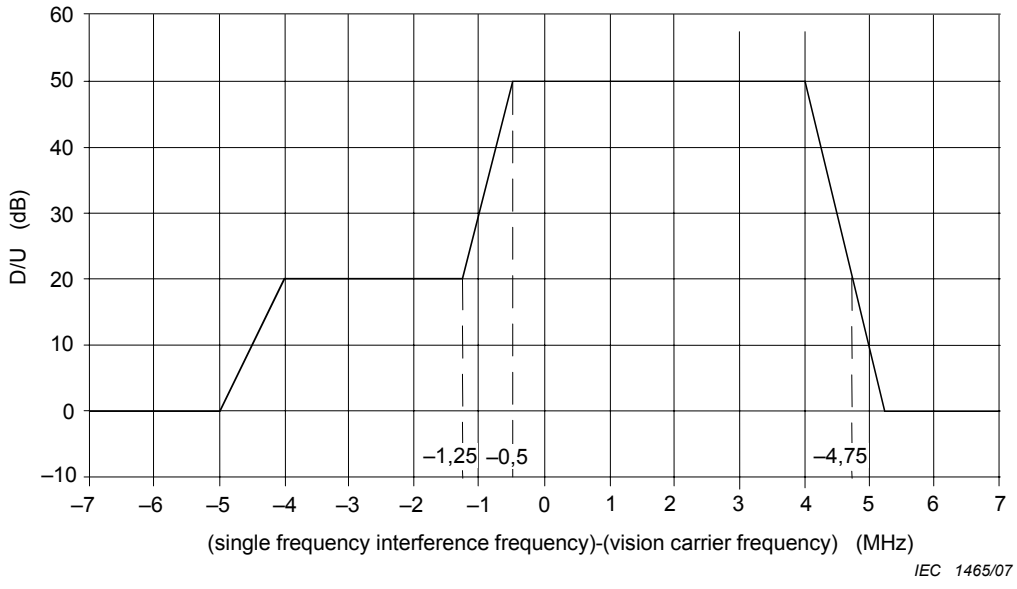

Figure J.2 – Single-frequency interference (VSB-AM NTSC) (Japan)

--`,,```,,,,````-`-`,,`,,`,`,,`---

Copyright International Electrotechnical Commission
Provided by IHS under license with IEC
No reproduction or networking permitted without license from IHS Not for Resale

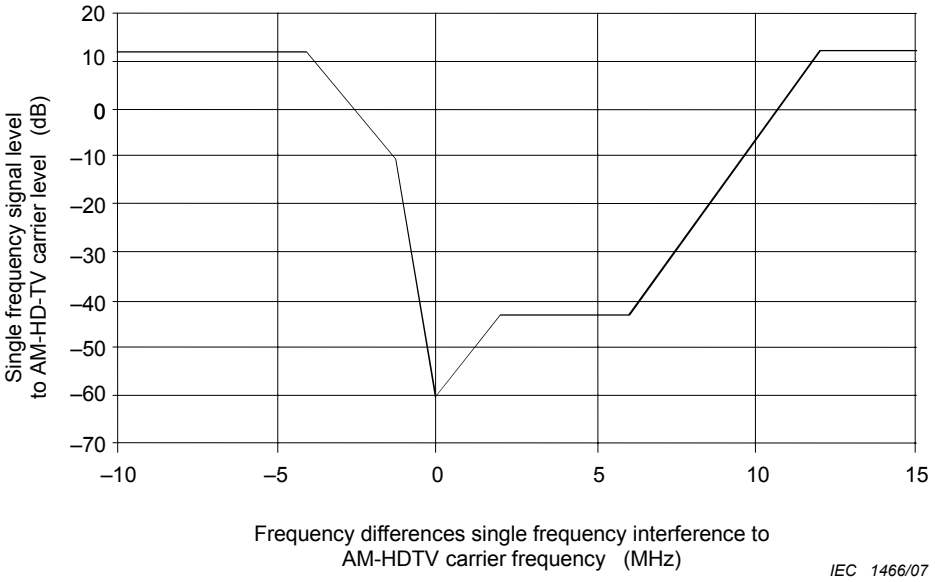

Figure J.3 – Single-frequency interference (VSB-AM HDTV) (Japan)

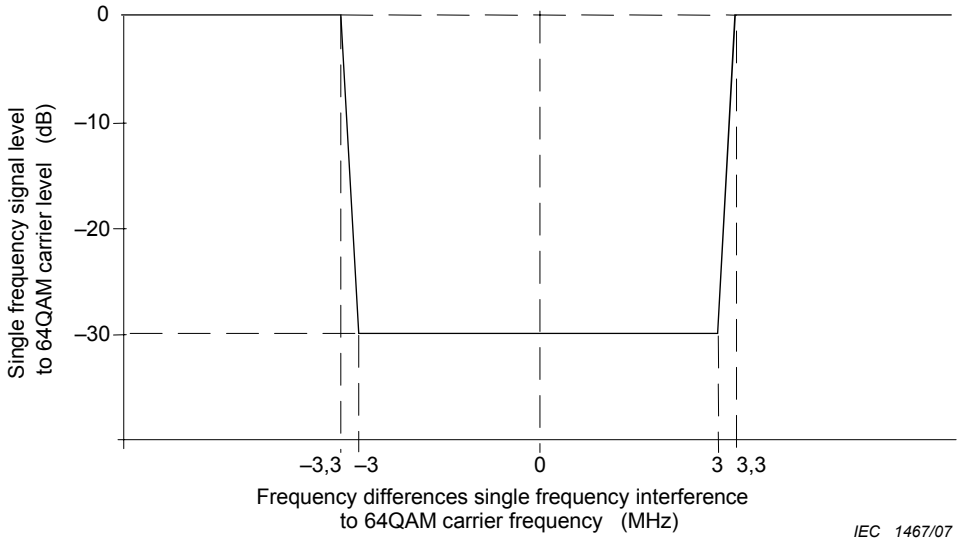

Figure J.4 – Single-frequency interference (64 QAM digital) (Japan)

J.9.2 Netherlands

Replace by/add the following “single-frequency interference” regulation:

AM-VSB-PAL-signals:	$C/I \geq 60$ dB	(measured in a bandwidth of 300 kHz)
For signals outside used TV channels:	$C/I \geq 40$ dB	

Copyright International Electrotechnical Commission
Provided by IHS under license with IEC
No reproduction or networking permitted without license from IHS Not for Resale

J.10 Subclause 5.9.2, Japan

Replace by/add the following “single-channel intermodulation” regulation:

FM-NTSC	Not more than –36 dB
FM HDTV	Not more than –36 dB

J.11 Subclause 5.9.5, Japan

Replace by/add the following “cross-modulation” regulation:

Cross-modulation (20 lg{(a-b)/a})	Not more than –40 dB

J.12 Subclause 5.10.2, Netherlands, Japan

J.12.1 Netherlands

Replace the requirements for “echoes in television channels, PAL-SECAM standards” by the “requirement for echo loss in relation to the time delay of the reflected signal for AM-PAL-TV and FM-radio” (Figure J.5).

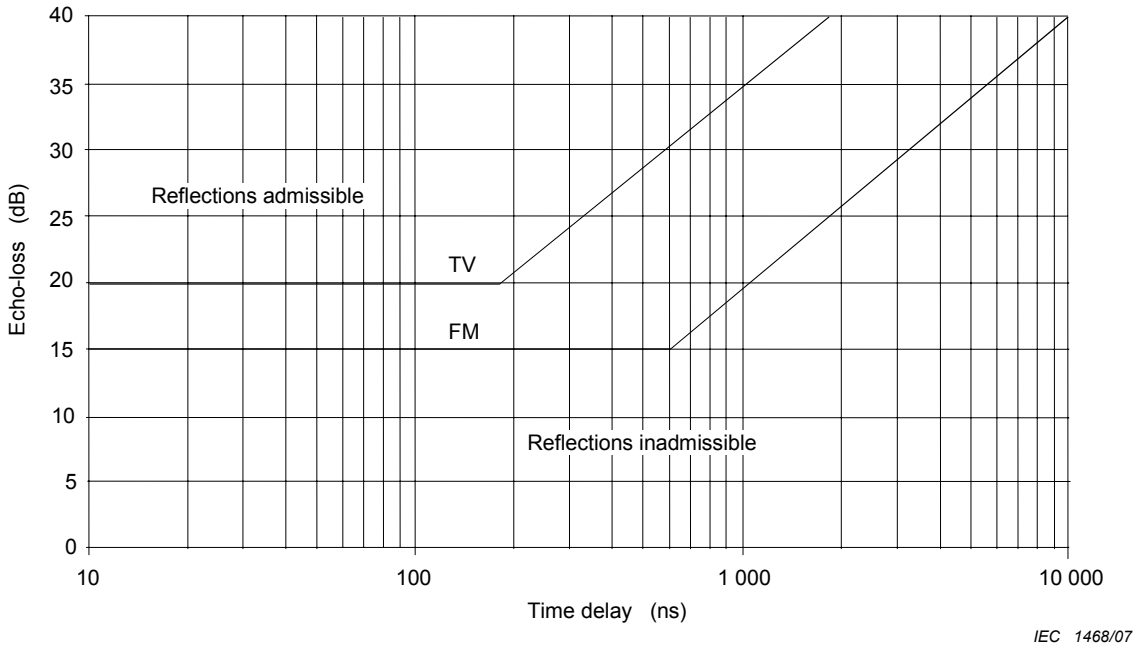

Figure J.5 – Requirement for echo loss in relation to the time delay of the reflected signal (Netherlands)

Copyright International Electrotechnical Commission
Provided by IHS under license with IEC
No reproduction or networking permitted without license from IHS Not for Resale

J.12.2 Japan

Replace by/add the following “echoes” regulation:

VSB-AM NTSC	Figure J.6
FM NTSC	Figure J.7
FM HDTV	Figure J.8
VSB-AM HDTV	Figure J.9
64 QAM Digital	Figure J.10

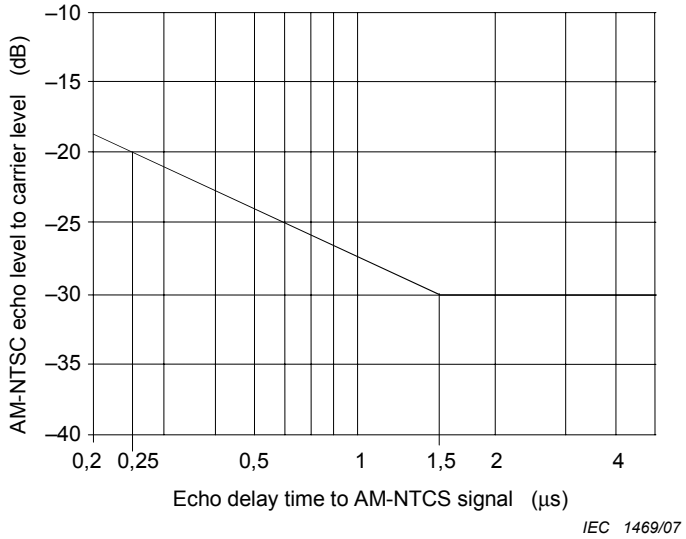

Figure J.6 – Echoes (VSB-AM NTSC) (Japan)

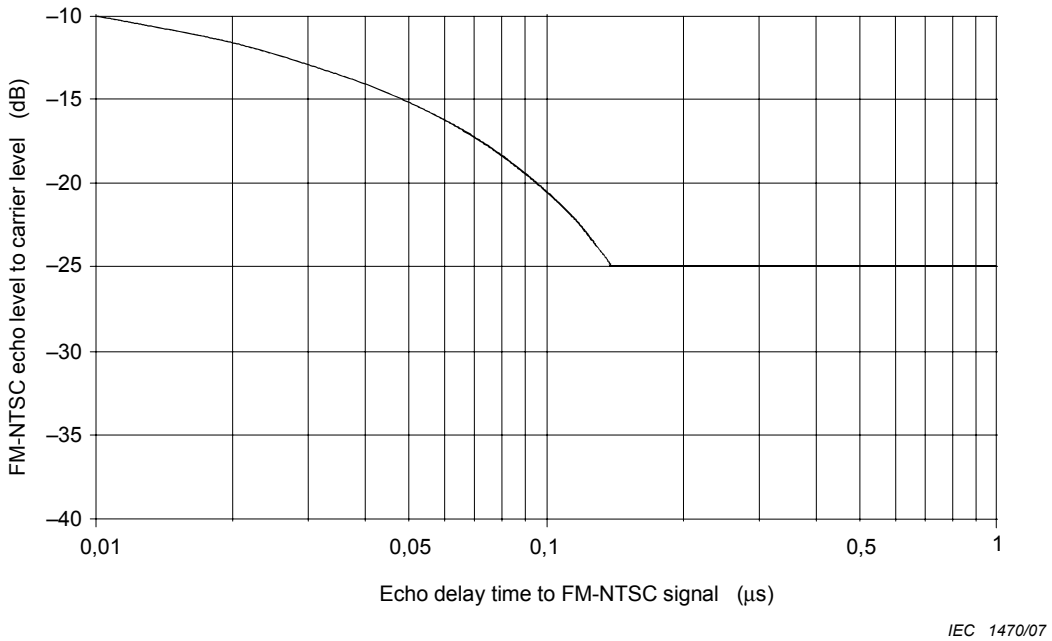

Figure J.7 – Echoes (FM NTSC) (Japan)

Copyright International Electrotechnical Commission
Provided by IHS under license with IEC
No reproduction or networking permitted without license from IHS
Not for Resale

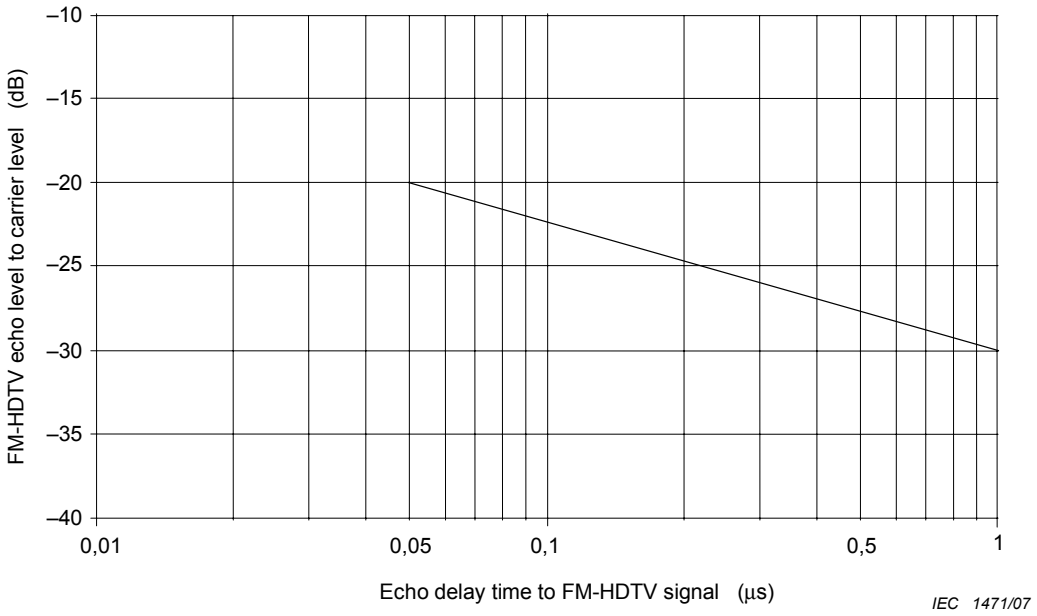

Figure J.8 – Echoes (FM HDTV) (Japan)

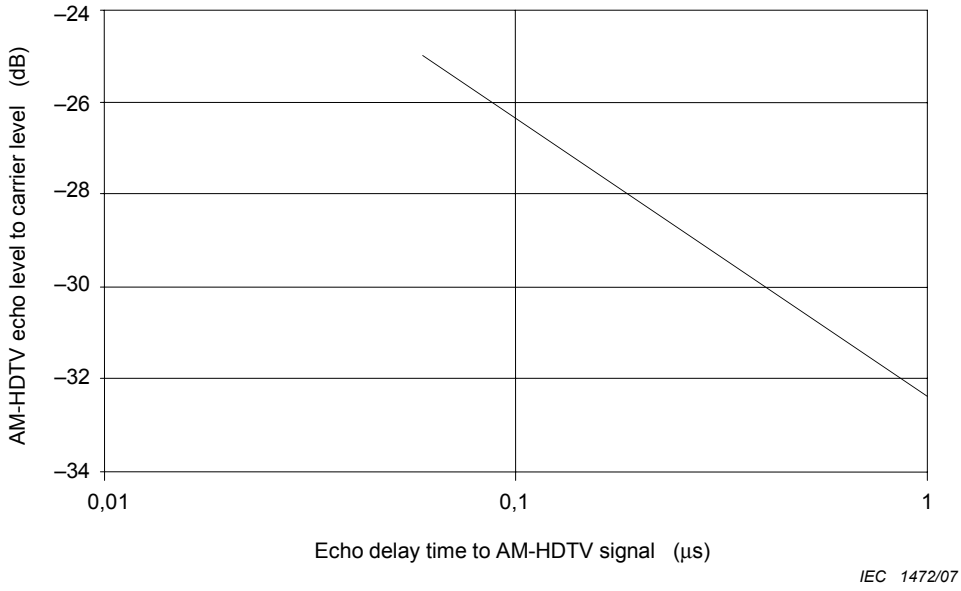

Figure J.9 – Echoes (VSB-AM HDTV) (Japan)

Copyright International Electrotechnical Commission
Provided by IHS under license with IEC
No reproduction or networking permitted without license from IHS Not for Resale

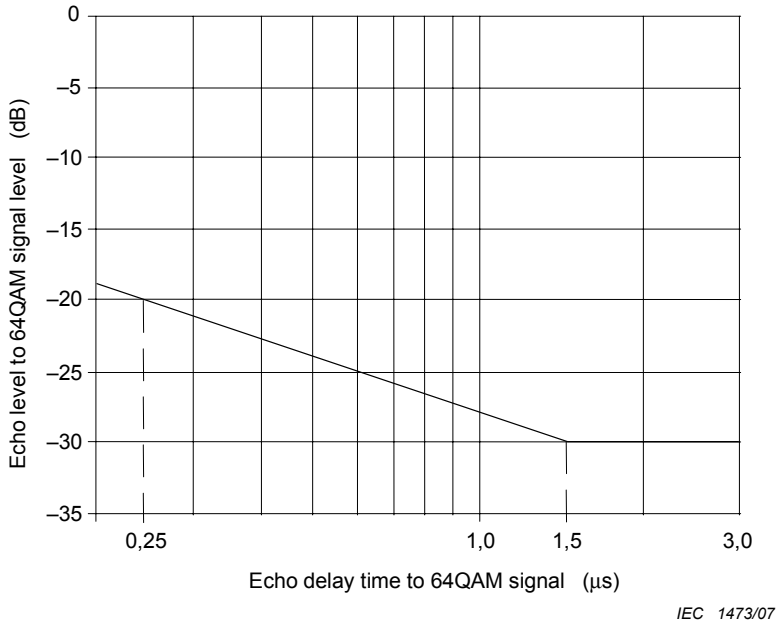

Figure J.10 – Echoes (64 QAM digital) (Japan)

J.13 Subclause 5.11, Japan

Replace by/add the following “hum modulation” regulation:

AM-VSB (20 lg{(a-b)/a})	Not more than –50 dB (50 Hz) Not more than –40 dB (60 Hz)
AM-HDTV (20 lg{(a-b)/a})	Not more than –50 dB (50 Hz) Not more than –40 dB (60 Hz)

J.14 Subclause 5.12.1, Denmark

Add the requirement for “decoding margin” being “the decoding margin must be 40 %, when the margin is a minimum of 70 % at the receiving antenna”.

J.15 Subclause 5.13.1.5, Japan

Replace by/add the following “phase noise” regulation:

DVB signal (PSK, QAM and OFDM)	u.c.

J.16 Subclause 5.14.3, Netherlands

Add the requirement for “adjacent channel spacing” by ≥400 kHz.

--`,,```,,,,````-`-`,,`,,`,`,,`---

Copyright International Electrotechnical Commission
Provided by IHS under license with IEC
No reproduction or networking permitted without license from IHS Not for Resale

J.17 Clause 7, Japan

The requirements for the HNI are under consideration.

--`,,```,,,,````-`-`,,`,,`,`,,`---

Copyright International Electrotechnical Commission
Provided by IHS under license with IEC
No reproduction or networking permitted without license from IHS Not for Resale

Annex K
(informative)

Examples of home network implementation

K.1 Introduction

The purpose of this annex is to show how the HNI specification helps in the design of the network inside the dwelling unit (in-home cabling), and possibly in the design of MATV and CATV networks up to the HNI.

K.2 Design considerations for the home network

The design of the home network starts from the following main specifications:

- the SO specification on signal level (Table 4) and on the maximum level difference allowed in the frequency range of interest (Table 5) (for example, 12 dB in the frequency range 47 MHz to 862 MHz for PAL, SECAM);
- the HNI specifications on signal level (Table 28 for HNI1, Table 33 for HNI2 and HNI3) and on the maximum level difference allowed in the frequency range of interest (Table 29 for HNI1, Table 34 for HNI2 and HNI3) (for example, 7 dB in the frequency range 47 MHz to 862 MHz for PAL, SECAM taking into account the maximum value of 5 dB for *SSLP* respectively for *SSLA*).

Thus the MATV/CATV system provides amongst others television signals that, in the worst case, have a slope of -7 dB at the HNI interface; hence, the following design requirement for the home network shall be taken into account:

NOTE The slope sign is considered:

a) negative when the attenuation increases with frequency (cables) or the gain (amplifiers) decreases with frequency;

b) positive when the gain (amplifiers) increases with frequency (compensating slope).

- the slope of the home network (from the HNI to the SO) shall be down to -5 dB (in the 47 MHz to 862 MHz frequency range), when the frequency response of the equipment, passive (splitter) or active (amplifier), is flat;
- the slope of the home network (from the HNI to the SO) can be lower than -5 dB (i.e. up to -11 dB), when the frequency response of the equipment, passive (splitter) or active (amplifier), has a compensating slope (i.e. up to +6 dB);
- the slope of the home network from the HNI to the terminal input, that is considering also a 2 m long receiver lead with characteristics according to the IEC 60966 series, shall be up to -5,6 dB when the frequency response of the equipment, passive (splitter) or active (amplifier), has a flat response, or can be lower than -5,6 dB (i.e. up to -11,6 dB) when the frequency response of the equipment, passive (splitter) or active (amplifier), has a compensating slope (i.e. up to +6 dB);
- the HNI1 interface level specification is up to 18 dB higher than the minimum system outlet specification of (for example, 78 dB(µV) for the analogue channels case with 60 dB(µV) minimum signal level at system outlet);
- the HNI2 and HNI3 interface minimum signal level specification is from 3 dB to 6 dB higher than the minimum system outlet specification of Table 4.

--`,,```,,,,````-`-`,,`,,`,`,,`---

Copyright International Electrotechnical Commission
Provided by IHS under license with IEC
No reproduction or networking permitted without license from IHS Not for Resale

The MATV/CATV system may have a positive slope at the HNI of up to +7 dB, when the HNI is near a MATV/CATV amplifier; this is compatible with both types of standardised home-cabling (without and with a compensating slope up to +6 dB); but taking the full benefit from the positive slope at the HNI would require a case by case analysis.

K.3 Considerations for the implementation of home networks

Home networks for broadcasting and communication technology signals (BCT signals) require special and appropriate installation criteria. The home network should be so designed that there is no need for patching the permanent link cable and that all system outlets are permanently linked to a splitter in the HNI. If this implementation of home networks for some reasons is not a practical or possible solution, the following recommendations have to be fulfilled.

a) In coaxial cabling systems, preference should be given to the interconnect model (see EN 50173-4 [5]) that avoids too many connections in series which may badly affect the signal quality.

b) Jumpers and patch cords shall be avoided, by a direct connection of permanent link cables to the equipment.

   NOTE As an installation rule half a meter of cable should be left hanging from the wall.

c) Equipment connectors left unused should be terminated with a matched load to minimize radiation, ingress and in-band ripples due to mismatches.

K.4 Network examples

Taking into account the above design and installation recommendations, some examples of home network implementation are indicated in Figure K.1.

Copyright International Electrotechnical Commission
Provided by IHS under license with IEC
No reproduction or networking permitted without license from IHS Not for Resale

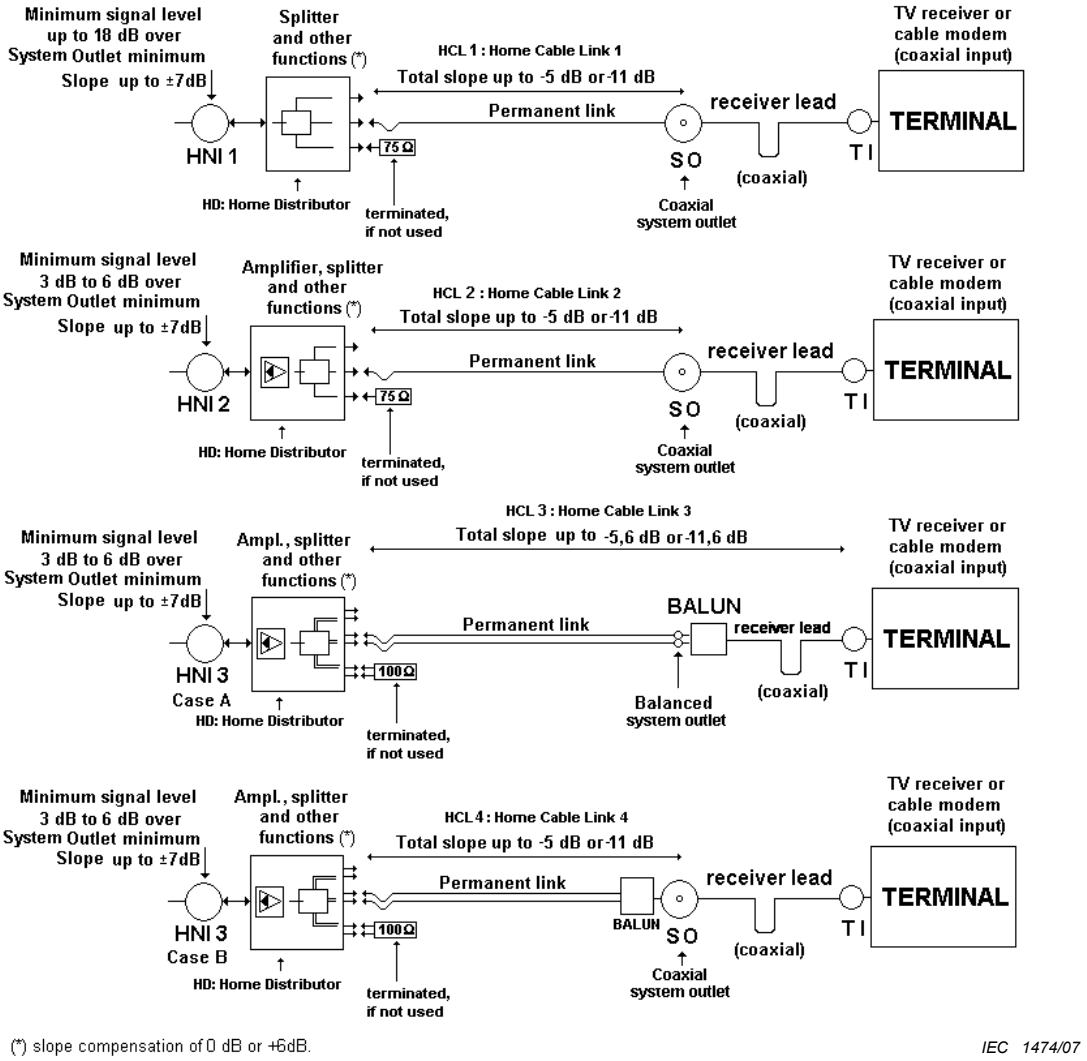

Figure K.1 – Examples of HNI

These examples show

- the main requirements for signal level (maximum value) and slope (best and worst case) at the HNI and the total slope (worst case) allowed in the home network;
- the installation of the permanent link made with half a meter of cable left hanging from the wall, in order to allow direct connection to the equipment without jumpers or patch cords.

K.5 Calculation examples

K.5.1 Introduction

The examples given in Tables K.1, K.2, K.3 and K.4 show the maximum allowed insertion loss (or gain) of the home network between the HNI and SO (for HNI1, HNI2 and HNI3 case B) or the terminal input (HNI3 Case A).

The home cable link (HCL) insertion loss is the addition of the losses of the fixed cabling (permanent link), of the equipment cords (receiver lead), of the system outlet and of the baluns, if any; the losses of the power splitter(s) and the gain of the amplifier near the HNI are not in the "HCL loss" and can be designed considering the number of system outlets to be connected and the type of the home network (passive or active, coaxial cable or balanced cables).

--`,,```,,,,````-`-`,,`,,`,`,,`---

Copyright International Electrotechnical Commission
Provided by IHS under license with IEC
No reproduction or networking permitted without license from IHS Not for Resale

K.5.2 Passive or active coaxial home network

The HNI1 and HNI2 specifications (7.2 and 7.3) are related to a home network with coaxial cables and their connections, having a total length L_{PL} (permanent link length) to be appropriately calculated, considering its attenuation and allowed slope.

The attenuation (dB), of the permanent link up to the SO**,** is given by the following formulae (this coaxial cable model corresponds to a specific attenuation of about 19,8 dB/100 m at 1 GHz (or 17,5 dB at 800 MHz, measured according to EN 50117), assuming a direct connection of the cable to the equipment:

$$a_{PL} = (L_{PL}/100)\ (0{,}563\ \sqrt{f}\ + 0{,}00197\ f) + a_{SO}$$

where

a_{SO}: system outlet attenuation

f is in MHz and L_{PL} in m.

The values of Tables K.1 and K.2 have been obtained assuming an attenuation of the system outlet (coaxial) of 0,5 dB.

The insertion loss (dB) of the home cable links 1 and 2 (HCL1 and HCL2), including the receiver lead of length L_{RL} having characteristics according to the IEC 60966 series, and without jumpers or patch cords at the equipment, as indicated in K.3, is given by the following formula:

$$a_{HCL1,2} = a_{PL} + 0{,}08 + 0{,}4\ L_{RL}\ \sqrt{f\ /\ 1\ 000}$$

K.5.3 Different home network type (balanced type cables)

The HNI3 specifications (7.4) are related to a home network with balanced pair cables, having a total length L_{PL}) to be appropriately calculated, considering its attenuation and the allowed slope.

In case A of Figure 43 (see also Figure K.1) there is not a coaxial system outlet but a balanced system outlet (for example, RJ45 type connector) and a connection to the terminal input by a coaxial receiver lead (similar to EN 60966 series) but including an additional balun at its input.

The receiver lead is supposed to comply with the specification given in 5.3.1. The length of this coaxial cable (L_{RL}) is supposed to be 2 m.

The attenuation (dB) of the HCL3 up to the terminal input**,** is given by the following formula (the balanced cable model corresponds to a specific attenuation of about 62 dB/100 m at 1 GHz):

$$a_{HCL3A} = [L_{PL}/100]\ (1{,}645\ \sqrt{f}\ + 0{,}01\ f + 0{,}25/\sqrt{f}\ ) + 0{,}04\ \sqrt{f}\ + a_{SO} + a_{BAL} +$$

$$+ 0{,}08 + 0{,}4\ L_{RL}\ \sqrt{f\ /\ 1000}$$

where

a_{SO} is the system outlet attenuation;

Copyright International Electrotechnical Commission
Provided by IHS under license with IEC
No reproduction or networking permitted without license from IHS Not for Resale

a_{BAL} is the balun attenuation;

f is in MHz, L_{PL} and L_{RL} in m.

The term 0,08 + 0,4 $L_{RL} \cdot \sqrt{f / 1000}$ is the attenuation model (see IEC 60966-2) for the receiver lead (coaxial) of length L_{RL}.

The values of Table K.3 have been obtained assuming an attenuation of the system outlet (balanced) of 0,5 dB and of the balun of 0,5 dB.

The minimum signal level at terminal input shall comply with Table 39 (i.e. at least 60 dB(μV) in this HNI3 case A).

NOTE 1 The 1 dB increase of minimum signal level at terminal input with respect to the all coaxial case is a small provision against impairments due to a somewhat poorer return loss of balanced pair components.

NOTE 2 In this case, the losses due to the balanced connectors (or connections) at both ends of the permanent link are assumed to be 0,04 $\sqrt{f}$.

For case B of Figure 43 (see also Figure K.1), where there is a coaxial system outlet and no patch cord or jumper in the connection to the equipment, the attenuation of the permanent link up to the SO is given by the following formula (the balanced cable model corresponds to a specific attenuation of about 62 dB/100 m at 1 GHz):

$$a_{HCL3B} = [L_{PL}/100]\ (1{,}645\ \sqrt{f}\ + 0{,}01\ f + 0{,}25/\sqrt{f}\ ) + 0{,}04\ \sqrt{f}\ + a_{SO} + a_{BAL}$$

where

a_{SO} is the system outlet attenuation;

a_{BAL} is the balun attenuation;

f is in MHz and L_{PL} in m.

The values of Tables K.4 have been obtained assuming the attenuations of the system outlet (coaxial) and of its balun to be 0,5 dB each.

The minimum signal levels at system outlet shall comply with Table 39 (i.e. at least 61 dB(μV) in this HNI3 case B).

NOTE 3 The 1 dB increase of minimum signal level at system outlet with respect to the all coaxial case is a small provision against impairments due to a somewhat poorer return loss of balanced pair components.

NOTE 4 In this case the losses due to the balanced connectors (or connections) at both ends of the permanent link are assumed to be 0,04 $\sqrt{f}$.

K.5.4 General considerations

The Tables K.1 to K.4 clearly show that the cable length used for the home cable link depends on the type of cable used and also on the type and number of connectors, baluns, etc. introduced. These length values are mainly related to the maximum slope allowed in the cables. With cables of lower specific attenuation (dB/100 m) the lengths of the cables will be higher.

These tables also show

- the attenuation allowed for the splitter taking into account the signal delivered at the HNI1 (passive coaxial home network),

Copyright International Electrotechnical Commission
Provided by IHS under license with IEC
No reproduction or networking permitted without license from IHS Not for Resale

- the splitter attenuation with a flat response (Table K.1) can be up to about 11 dB (splitting up to 8-way), if the permanent link has the maximum length of 35 m,
- if one output of the splitter has a slope compensating response of +6 dB, with a 862 MHz attenuation of only about 3,5 dB, as for a 2-way splitter, but 9,5 dB at 47 MHz, the permanent link connected to that output can be 77 m long,
- the required gain for the in-home amplifier is in the range between 13 dB and 24 dB to 25 dB) (with or without slope, taking into account the signal delivered at the HNI2 (active coaxial home network) or at the HNI3 (home network with balanced pair cables) and a splitter attenuation of 12 dB (Table K.2, Table K.3 and Table K.4).

Typical losses for power splitters (F connectors, 22 dB isolation) are 3,6 dB for 2 outputs, 5,6 dB for 3 outputs and 7,4 dB for 4 outputs (0,4 dB should be added for the worst-case loss at 862 MHz); therefore, up to 8 system outlets could be installed within a total allocation of 11 dB to 12 dB for the home splitter(s) (see Tables K.1, K.2, K.3 and K.4).

Therefore, the examples given can lead to the following general considerations.

- The HNI1 specifications allow passive in-home cablings with up to 8 system outlets inside the dwelling unit (the required minimum mutual isolation of 22 dB between any two system outlets shall also be provided), when the CATV/MATV network is optimized to deliver to the HNI1 at least 78 dB(μV) at 862 MHz (or 80 dB μV in the rare case of a +7 dB slope, where the 47 MHz carrier level is the limiting parameter).
- The HNI2 and HNI3 specifications are compatible with several options of 13 dB to 25 dB in-home amplifiers for feeding in-home cablings with up to 8-10 system outlets inside the dwelling unit (the required minimum mutual isolation of 22 dB between any two system outlets shall also be provided).
- A +6 dB slope compensation built in the in-home splitter/amplifier extends the permissible lengths of the permanent link up to about 77 m for coaxial cables and up to about 22 m for the balanced cable cases.
- More complex cases, when the in-home cabling slope is below -11 dB, require case-specific design and engineering, with several different slope compensations to match the effective HCL losses, and/or equalization at HNI depending upon the specific slope delivered by the CATV/ MATV network at the HNI to the dwelling unit.

The required minimum mutual isolation between any two TV receivers belonging to the same dwelling units is 22 dB (see 7.2.3, 7.3.2 and 7.4.2). The actual value achieved for mutual isolation is obtained adding to the 22 dB splitter isolation twice the VHF/UHF insertion loss of the permanent link: thus, a value ranging from about 26 dB in VHF(lower frequency) to about 34 dB in UHF (upper frequency) is achieved.

Non-equal power splitters (for example, attenuations of 2 dB and 8 dB) may be useful when the lengths of the permanent links are very different (for example, 10 m and 40 m); combinations like a two-way splitter followed by a three-way splitter can support one "long" length up to 70 m (coaxial) and three shorter lengths up to 35 m (coaxial).

The upstream requirements on the two-way home amplifier are under consideration: a 10 dB gain to compensate for the insertion loss of the splitter is suggested.

K.6 Home network design in a MATV system

The case of a high signal level at HNI1 (like 78 dB(μV) to 80 dB(μV) at 862 MHz) is that of an optimized MATV design when there are no in-home amplifiers, but a single collective amplifier (in the head end of the building's MATV system or in the "staircase") enabling home habitants to install extensive passive in-home cabling; it may be "the most convenient" or "most comfortable" design for the inhabitants of the flats.

Copyright International Electrotechnical Commission
Provided by IHS under license with IEC
No reproduction or networking permitted without license from IHS Not for Resale

Copyright International Electrotechnical Commission
Provided by IHS under license with IEC
No reproduction or networking permitted without license from IHS
Not for Resale

Table K.1 – Example of home network with coaxial cabling (passive) from HNI1 to SO

HNI1 Signal level above SO minimum level dB [b]	Splitter slope dB	Home distribution splitter attenuation dB	Maximum permanent link length L_{PL} m	System outlet loss dB	Home cable link 1 (HCL1) insertion loss a dB					HCL1 slope [a] 47 MHz to 862 MHz dB	HCL1 slope [a] 950 MHz to 2 150 MHz dB
					47 MHz	470 MHz	862 MHz	950 MHz	2 150 MHz		
18	0	**11,1**	**35,0**	0,5	1,9	5,1	**6,9**	7,2	11,1	**-5,0**	-3,9
18	**+6**	**3,5**	**77,0**	0,5	3,5	10,6	**14,5**	15,3	23,9	**-11,0**	-8,6

[a] Permanent link plus system outlet.

[b] In the rare case of a positive slope of + 7dB at the HNI, the UHF (862 MHz) signal level at HNI1 shall be slightly above 80 dB(µV) for the Band I channels to meet the minimum level requirements, which are 60 dB(µV) (47 MHz at system outlet) +1,9 dB (permanent link) +11,1 dB (splitter) +7 dB (HNI1 positive slope) = 80 dB(µV)

Table K.2 – Example of home network with coaxial cabling (active) from HNI2 to SO

HNI2 Signal level above SO minimum level dB	Amplifier gain dB	Amplifier or splitter slope dB	Home distribution splitter attenuation dB	Maximum permanent link length L_{PL} m	System outlet loss dB	Home cable link 2 (HCL2) insertion loss a dB					HCL2 slope [a] 47 MHz to 862 MHz dB	HCL2 slope [a] 950 MHz to 2 150 MHz dB
						47 MHz	470 MHz	862 MHz	950 MHz	2 150 MHz		
6	12,9	0	12,0	**35,0**	0,5	1,9	5,1	**6,9**	7,2	11,1	**-5,0**	-3,9
6	20,5	**+6**	12,0	**77,0**	0,5	3,5	10,6	**14,5**	15,3	23,9	**-11,0**	-8,6
3	15,9	0	12,0	**35,0**	0,5	1,9	5,1	**6,9**	7,2	11,1	**-5,0**	-3,9
3	23,5	**+6**	12,0	**77,0**	0,5	3,5	10,6	**14,5**	15,3	23,9	**-11,0**	-8,6

[a] Permanent link plus system outlet.

Copyright International Electrotechnical Commission
Provided by IHS under license with IEC
No reproduction or networking permitted without license from IHS
Not for Resale

Table K.3 – Example of home network with balanced pair cables (active) from HNI3 to coaxial terminal input (case A)

HNI3 (case A) Minimum [a] signal level at HNI3 above minimum level at SO dB	Minimum amplifier gain dB	Amplifier or splitter slope dB	Home distribution splitter attenuation dB	Permanent link length L_{PL} m	Receiver lead length L_{RL} m	System outlet and baluns loss [b] dB	Home cable link 3 (HCL3) insertion loss dB			HCL3 slope 47 MHz to 862 MHz dB
							47 MHz	470 MHz	862 MHz	
6	14,2	0	12,0	**9,1**	2	1,0	2,6	6,2	**8,2**	**-5,6**
6	21,7	**+6**	12,0	**22,4**	2	1,0	4,2	11,5	**15,8**	**-11,6**
3	17,2	0	12,0	**9,1**	2	1,0	2,6	6,2	**8,2**	**-5,6**
3	24,7	**+6**	12,0	**22,4**	2	1,0	4,2	11,5	**15,8**	**-11,6**

[a] The HNI3 signal level can be significantly above the minimum; some selectable or tunable attenuation may then be required at the input to the 25 dB gain amplifier (with 6 dB compensating slope) to meet the multiple frequency interference requirement (7.3.6.3) of 71 dB; in this HNI3 case A the terminal input level is at least 60 dB(µV).

[b] 1 dB for both together.

Table K.4 – Example of home network with balanced pair cables (active) from HNI3 to coaxial SO (case B)

HNI3 (case B) Minimum [a] signal level at HNI3 above minimum level at system outlet dB	Minimum amplifier gain [b] dB	Amplifier or splitter slope dB	Home distribution splitter attenuation dB	Permanent link length L_{PL} m	System outlet and baluns loss dB	Home cable link 4 (HCL 4) Insertion loss [c] dB			HCL4 slope [c] 47 MHz to 862 MHz dB
						47 MHz	470 MHz	862 MHz	
6	14,3	0	12,0	**9,0**	1,0	2,3	5,5	**7,3**	**-5,0**
6	21,9	**+6**	12,0	**22,3**	1,0	3,9	10,9	**14,9**	**-11,0**
3	17,3	0	12,0	**9,0**	1,0	2,3	5,5	**7,3**	**-5,0**
3	24,9	**+6**	12,0	**22,3**	1,0	3,9	10,9	**14,9**	**-11,0**

[a] The HNI3 signal level can be significantly above the minimum; some selectable or tunable attenuation may then be required at the input to the 25 dB gain of the amplifier (with 6 dB compensating slope) to meet the multiple frequency interference requirement (7.3.6.3) of 71 dB.

[b] The gain of the amplifier for HNI3 case B is calculated to deliver at least 61 dB(µV) at the coaxial system outlet to reduce the effects of balanced pair component mismatches (in-band ripple).

[c] Between the output of the balanced power splitter and the output of the coaxial system outlet.

Bibliography

[1] IEC 61169-2, *Radio-frequency connectors – Part 2: Sectional specification – Radio frequency coaxial connectors of type 9,52*

[2] IEC 61169-24, *Radio-frequency connectors – Part 24: Sectional specification – Radio frequency coaxial connectors with screw coupling, typically for use in 75 ohm cable distribution systems (type F)*

[3] CEPT:1997, *The Chester 1997 Multilateral Coordination Agreement relating to Technical Criteria, Coordination Principles and Procedures for the Introduction of Terrestrial Digital Video Broadcasting (DVB-T), Chester, July 1997*

[4] CISPR 16-1 (all parts), *Specification for radio disturbance and immunity measuring apparatus and methods – Part 1: Radio disturbance and immunity measuring apparatus*

[5] EN 50173-4, *Information technology – Generic cabling systems – Part 4: Homes*

Copyright International Electrotechnical Commission
Provided by IHS under license with IEC
No reproduction or networking permitted without license from IHS Not for Resale

--`,,```,,,,````-`-`,,`,,`,`,,`---

Copyright International Electrotechnical Commission
Provided by IHS under license with IEC
No reproduction or networking permitted without license from IHS Not for Resale

Copyright International Electrotechnical Commission
Provided by IHS under license with IEC
No reproduction or networking permitted without license from IHS Not for Resale

INTERNATIONAL
ELECTROTECHNICAL
COMMISSION

3, rue de Varembé
P.O. Box 131
CH-1211 Geneva 20
Switzerland

Tel: + 41 22 919 02 11
Fax: + 41 22 919 03 00
info@iec.ch
www.iec.ch

Copyright International Electrotechnical Commission
Provided by IHS under license with IEC
No reproduction or networking permitted without license from IHS
Not for Resale