INTERNATIONAL STANDARD

IEC 60684-2

1997

AMENDMENT 2
2005-11

Amendment 2

Flexible insulating sleeving –

Part 2: Methods of test

© IEC 2005 Droits de reproduction réservés — Copyright - all rights reserved

International Electrotechnical Commission, 3, rue de Varembé, PO Box 131, CH-1211 Geneva 20, Switzerland
Telephone: +41 22 919 02 11 Telefax: +41 22 919 03 00 E-mail: inmail@iec.ch Web: www.iec.ch

Commission Electrotechnique Internationale
International Electrotechnical Commission
Международная Электротехническая Комиссия

PRICE CODE M

For price, see current catalogue

--`,,```,,,,````-`-`,,`,,`,`,,`---
Copyright International Electrotechnical Commission
Provided by IHS under license with IEC
No reproduction or networking permitted without license from IHS

Not for Resale

FOREWORD

This amendment has been prepared by IEC technical committee 15: Standards on specifications for electrical Insulating materials.

The text of this amendment is based on the following documents:

FDIS	Report on voting
15/224/FDIS	15/255/RVD

Full information on the voting for the approval of this amendment can be found in the report on voting indicated in the above table.

The committee has decided that the contents of this amendment and the base publication will remain unchanged until the maintenance result date indicated on the IEC web site under "http://webstore.iec.ch" in the data related to the specific publication. At this date, the publication will be

- reconfirmed,
- withdrawn,
- replaced by a revised edition, or
- amended.

Page 5

CONTENTS

Add the following new clauses:

51 Dynamic shear at ambient temperature
52 Dynamic shear at elevated temperature
53 Dynamic shear after heat shock and heat ageing
54 Rolling drum peel to aluminium
55 Aluminium rod dynamic shear
56 Sealing
57 Adhesive T peel strength of two bonded heat-shrinkable substrates

Page 113

Add after Clause 50, introduced in Amendment 1, the following *new Clauses 51 through 57:*

51 Dynamic shear at ambient temperature

51.1 Principle

This test is designed to evaluate the strength of dual wall sleevings under shear conditions when bonded to an aluminium substrate.

--`,,```,,,,````-`-`,,`,,`,`,,`---

Copyright International Electrotechnical Commission
Provided by IHS under license with IEC
No reproduction or networking permitted without license from IHS Not for Resale

51.2 Apparatus

Aluminium strips (100 ± 5) mm x (25 ± 1) mm x (0,9 ± 0,1) mm.

Degreasing solvent: 2-Butanone (methyl ethyl ketone)

Specimen assembly fixture (see Figure 16)

Silicone release paper

320 grit abrasive

Tensile test machine

Oven (for method 52, dynamic shear at elevated temperature)

Weight and Mass 1,4 kg ± 0,1 kg.

Suitable weight to flatten specimens.

51.3 Form and number of test specimens

Three test specimens shall be prepared. Three strips of aluminium shall be abraded and degreased on one side on a length of at least 20 mm from one end. Three lengths of sleeving at least 120 mm long shall be recovered in an oven for the time and temperature as specified in IEC 60684-3. Immediately after removal the sleeving shall be cut open longitudinally and laid flat on the silicone release paper, with the inside coated surface in contact with the silicone paper. A weight of sufficient mass to keep the specimens flat shall be placed on top. This assembly shall be allowed to cool to room temperature before the weight is removed. Any other suitable method for flattening the sleeving may be used.

The three specimens of the sleevings shall be finally cut longitudinally (100 ± 5) mm × (25 ± 1) mm.

The aluminium strips and cut sleeving specimens shall be assembled as shown in Figure 16, with the coated surface of the sleeving in contact with the abraded surface of the aluminium, overlapped between 12,5 mm and 14,2 mm. The weight with mass 1,4 kg shall be preconditioned in an oven for at least 1 h at the assembly conditioning temperature as specified in IEC 60684-3. The whole assembly, as shown in Figure 16, shall be placed in an oven for the time and temperature as specified in IEC 60684-3. The assembly shall then be removed from the oven and allowed to cool to room temperature before the weight is removed.

51.4 Procedure

Insert the specimen in the tensile test machine by clamping at least 25 mm of the aluminum strip in the top jaw and at least 25 mm of the sleeving in the bottom jaw. The rate of jaw separation shall be (50 ± 5) mm/min. Record the maximum load for each specimen.

51.5 Result

The result shall be the mean of the three maximum loads.

Copyright International Electrotechnical Commission
Provided by IHS under license with IEC
No reproduction or networking permitted without license from IHS Not for Resale

Dimensions in millimetres

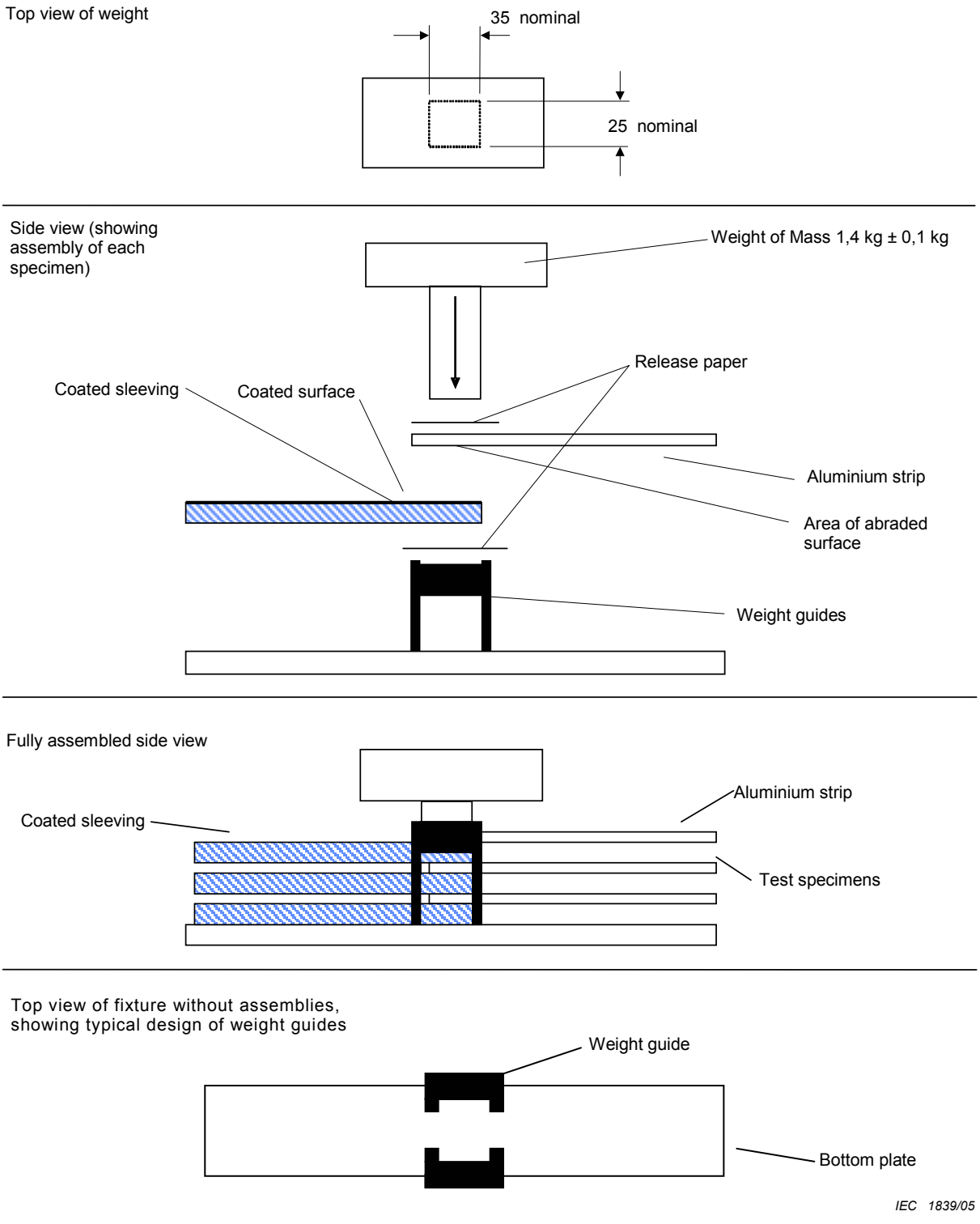

Figure 16 – Assembly and fixture for dynamic shear at ambient temperature

Copyright International Electrotechnical Commission
Provided by IHS under license with IEC
No reproduction or networking permitted without license from IHS Not for Resale

52 Dynamic shear at elevated temperature

The test specimens shall be prepared in accordance with 51.3.

The procedure shall be in accordance with 51.4 except that the test is performed in an oven mounted in the tensile test machine. The test specimens shall be pre-conditioned in the test oven and at the temperature of test for at least 30 min. The test temperatures shall be as specified in IEC 60684-3.

53 Dynamic shear after heat shock and heat ageing

The test specimens shall be prepared in accordance with 51.3.

The test specimens shall be sandwiched between two PTFE or PTFE coated aluminium plates as shown in Figure 17 with the bolts just sufficiently tight enough to ensure the specimens remain flat during the heat shock or heat ageing periods. The assembly shall be conditioned in an oven for the time and temperature specified in IEC 60684-3. The test specimen shall be removed from the oven and allowed to cool to room temperature before they are removed from the aluminum plates.

The test specimens shall then be tested in accordance with 51.4.

Dimensions in millimetres

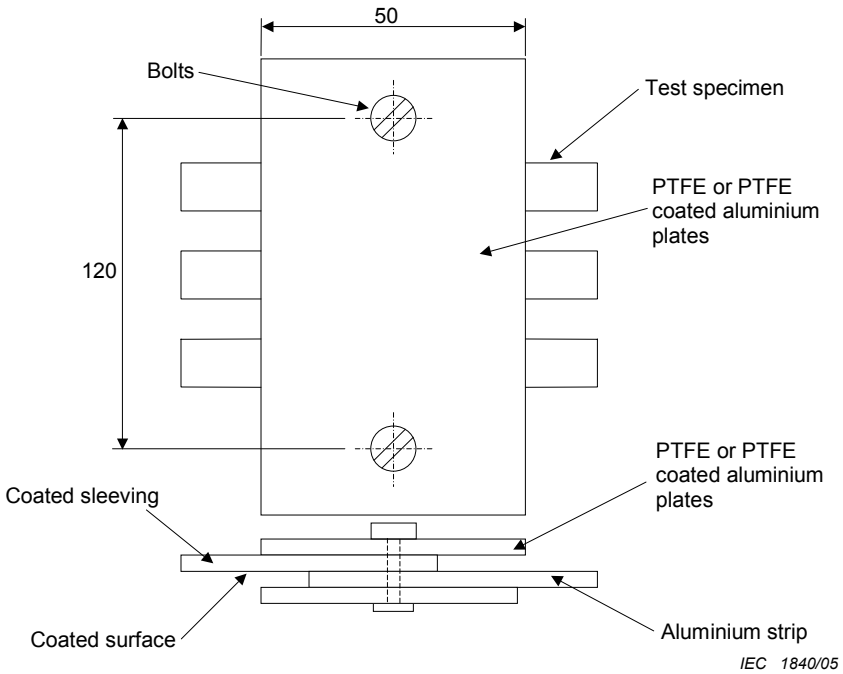

NOTE Dimensions are nominal unless otherwise specified.

Figure 17 – Assembly for heat shock and heat ageing

--`,,```,,,,````-`-`,,`,,`,`,,`---

Copyright International Electrotechnical Commission
Provided by IHS under license with IEC
No reproduction or networking permitted without license from IHS Not for Resale

54 Rolling drum peel to aluminium

54.1 Principle

This test is designed to evaluate the strength of dual wall sleevings under peel conditions when bonded to an aluminium substrate.

54.2 Apparatus

Aluminium tube with outside diameter of (9,5 ± 0,25) mm, approximately 35 mm long

Degreasing solvent: 2-Butanone (methyl ethyl ketone)

Free rolling drum (see Figure 18)

Paper or adhesive masking tape

320 grit abrasive

Tensile test machine

Oven

54.3 Form and number of test specimens

Three test specimens shall be prepared. Abrade the aluminium tubes with the 320 grit abrasive and then degrease with methyl ethyl ketone. Fix a narrow strip of adhesive masking tape longitudinally on the aluminium tube. Cut lengths of sleeving (25 ± 1) mm long and position centrally over the aluminium tube and condition in an oven for the time and temperature as detailed in the IEC 60684-3, by suspending horizontally. Remove the test specimens from the oven and allow to cool to ambient temperature. Cut longitudinally along the edge of the paper or adhesive tape and lift to provide a flap of material.

54.4 Procedure

Measure the width of the sleeving to the nearest millimetre on the aluminum tube. Insert the rolling drum into the aluminum tube of the test specimen. Clamp the rolling drum support into the bottom grip of the tensile test machine and the flap of material into the upper grip. Pull the test specimen apart at a constant rate of (50 ± 5) mm/min. (Figure 18)

Record the peel force in newtons over the entire peeling operation. Calculate the average peel force by ignoring the first and last 10 % of the peel trace, take 5 readings at equal distances apart from the remainder of the peel trace, add together and then divide by 5.

Calculate the peel strength using the following formula.

$$\text{Peel strength (N/25 mm)} = \frac{\text{Average peel force (N)} \times 25}{\text{Sleeving width (mm)}}$$

54.5 Result

The result shall be the mean of the three peel strengths.

Copyright International Electrotechnical Commission
Provided by IHS under license with IEC
No reproduction or networking permitted without license from IHS Not for Resale

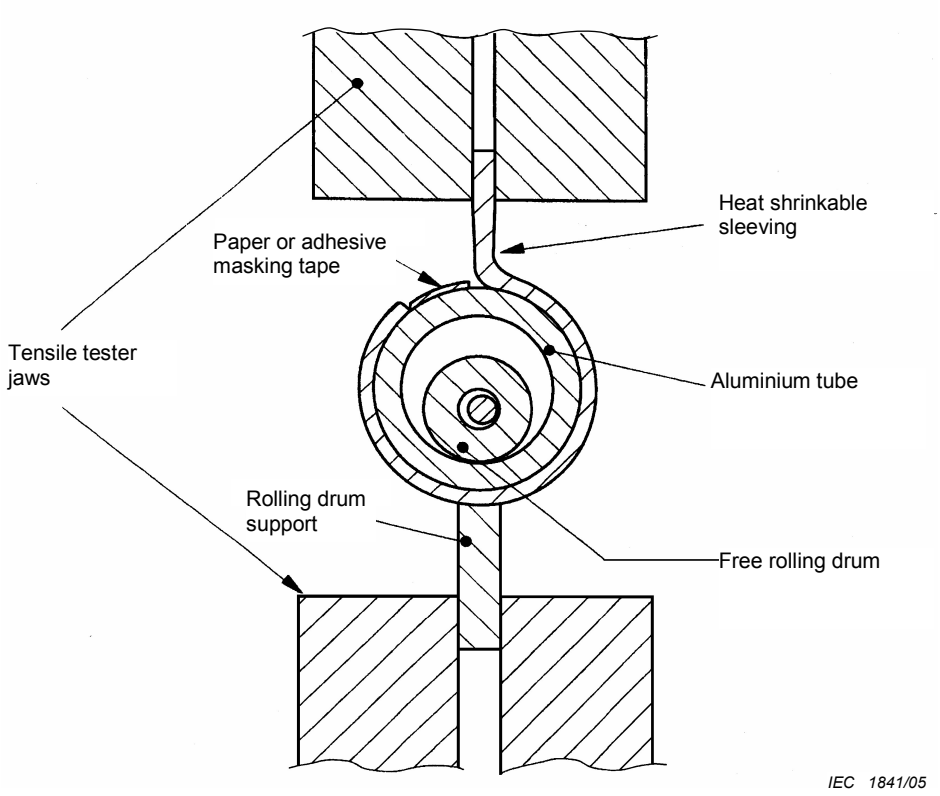

Figure 18 – Schematic arrangement for rolling drum peel

55 Aluminium rod dynamic shear

55.1 Principle

This test is designed to evaluate the adhesive bond strength of dual wall sleevings under dynamic shear conditions when bonded to an aluminium rod.

55.2 Apparatus

Aluminium rods (100 ± 5) mm long x diameters as specified in IEC 60684-3

Degreasing solvent: 2-Butanone (methyl ethyl ketone)

320 grit abrasive

Hot air gun

Masking tape approximately 25 mm wide (see Figure 19)

Tensile test machine (with oven when appropriate)

Oven

55.3 Form and number of test specimens

Three test specimens shall be prepared. Three aluminium rods shall be lightly abraded with 320 grit abrasive and degreased with methyl ethyl ketone. Wrap a length of the 25 mm wide masking tape completely round the aluminium rod in the position shown in Figure 19. Three lengths of sleeving at least 100 mm long shall be recovered, using the hot air gun to ensure the correct positioning of the sleeving onto the aluminium rods as shown in Figure 19. The assembly shall then be conditioned in an oven for the time and temperature specified in IEC 60684-3. Remove the assemblies from the oven and allow to cool to room temperature. Remove the section of the sleeving which overlaps the masking tape as shown in Figure 20.

--`,,```,,,,````-`-`,,`,,`,`,,`---

Copyright International Electrotechnical Commission
Provided by IHS under license with IEC
No reproduction or networking permitted without license from IHS Not for Resale

55.4 Procedure

Insert the specimen vertically in the tensile test machine. If the test is to be performed at elevated temperature, pre-condition all three test specimens in the tensile test machine oven for at least 30 min.

Grip at least 25 mm of each end of the test specimen in the jaws of the tensile test machine. The rate of jaw separation shall be (50 ± 5) mm/min. Record the maximum load for each test specimen.

55.5 Result

The result shall be the mean of the three maximum loads.

Dimensions in millimetres

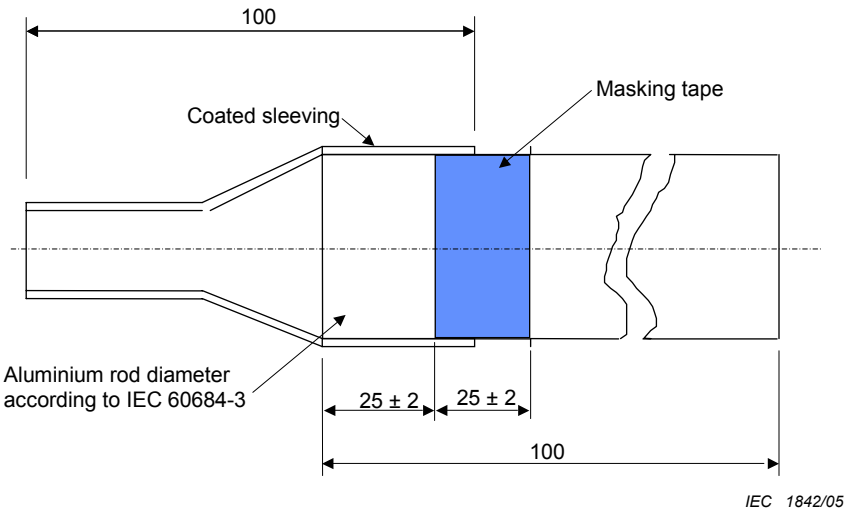

NOTE Dimensions are nominal unless otherwise specified.

Figure 19 – Assembly preparation for aluminium rod dynamic shear

Dimensions in millimetres

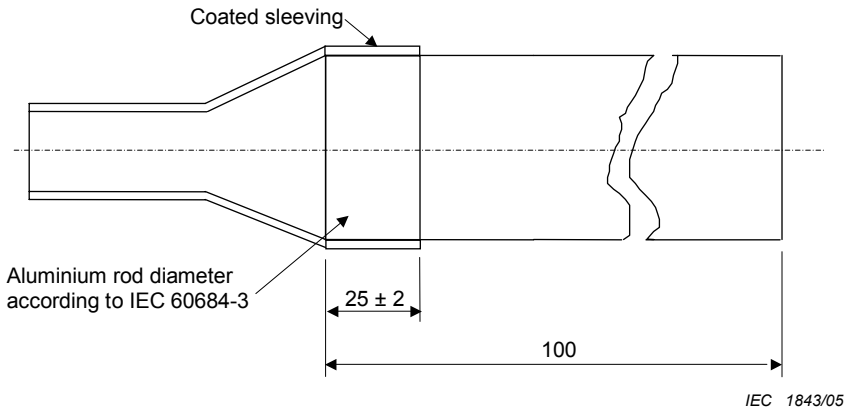

NOTE Dimensions are nominal unless otherwise specified.

Figure 20 – Test specimen for aluminium rod dynamic shear

Copyright International Electrotechnical Commission
Provided by IHS under license with IEC
No reproduction or networking permitted without license from IHS Not for Resale

56 Sealing

56.1 Principle

This test is designed to evaluate the sealing of dual wall sleeving when bonded to an aluminium substrate and subjected to internal air pressure.

56.2 Apparatus

Sealed aluminum tube with air valve (30 ± 1) mm external diameter x 400 mm long (see Figure 21)

Aluminium foil approximately 25 mm wide x (0,2 ± 0,05) mm thick x approximately 100 mm long

320 grit abrasive

Tissue paper

Degreasing solvent: 2-Butanone (methyl ethyl ketone)

Compressed air line

Water bath

Dimensions in millimetres

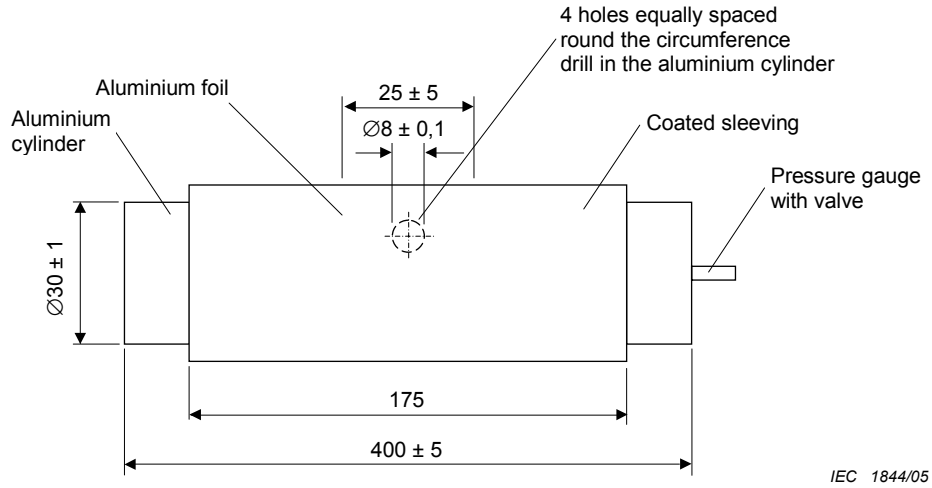

NOTE Dimensions are nominal unless otherwise specified.

Figure 21 – Assembly for sealing test

56.3 Form and number of test specimens

Three test specimens shall be prepared. Lightly abrade the surface of the sealed aluminium tube with the 320 grit abrasive, degrease with the tissue soaked in methyl ethyl ketone. Pre-condition the aluminium tube in an oven at 100 °C ±5 K for at least 30 min. Remove the tube from the oven and place the aluminium foil centrally over the four holes. Cut three 175 mm lengths of sleeving with a recovered diameter of 25 mm. Recover a length of sleeving centrally over the four holes in accordance with the manufacturer's recommendations. Place the assembly in an oven for the time and temperature specified in IEC 60684-3. Remove from the oven and leave at room temperature for at least 24 h.

Copyright International Electrotechnical Commission
Provided by IHS under license with IEC
No reproduction or networking permitted without license from IHS Not for Resale

56.4 Procedure

The assembly shall be maintained at a constant pressure as specified in IEC 60684-3 using clean dry compressed air, immersed in the water bath and then conditioned for (24 ± 1) h at the temperature specified in IEC 60684-3. The assembly shall be checked periodically and after 24 h for any air bubbles escaping from the ends of the sleeving.

56.5 Result

Observation of air bubbles escaping from the ends of the sleeve specimens.

57 Adhesive T peel strength of two bonded heat-shrinkable substrates

57.1 Principle

This test is designed to evaluate the strength of the adhesive bond between two pieces of heat-shrinkable sleeving.

57.2 Apparatus

Metal tube with outside diameter of (25 ± 5) mm.

Degreasing solvent: 2-Butanone (methyl ethyl ketone)

Paper cutter, shears or other cutting equipment capable of cutting thick specimens

Adhesive masking tape.

320 grit abrasive

Tensile test machine

Heat gun

Oven

57.3 Form and number of test specimens

Three test specimens shall be prepared. Heat recover a length of the heat-shrinkable sleeving on the metal tube, approximately 150 mm long. Cool the recovered sleeving to room temperature and lightly abrade the outside of the sleeving and the insides of three 40 mm lengths of a second heat-shrinkable sleeving with 320 grit abrasive. Wipe the abraded surfaces with a clean cloth or paper towel wet with methyl ethyl ketone and allow to dry 20 min to 30 min. For tape adhesives, spiral wrap the tape (with a 50 % overlap) over the recovered sleeving. For liquid adhesives, spread the adhesive over the entire bonding area of the recovered sleeving following the manufacturer's instructions for the application of the adhesive. Place a strip of 20 mm wide paper or adhesive masking tape lengthwise over the applied adhesive to provide free ends to insert into a tensile test machine (Figure 22).

Copyright International Electrotechnical Commission
Provided by IHS under license with IEC
No reproduction or networking permitted without license from IHS Not for Resale

Dimensions in millimetres

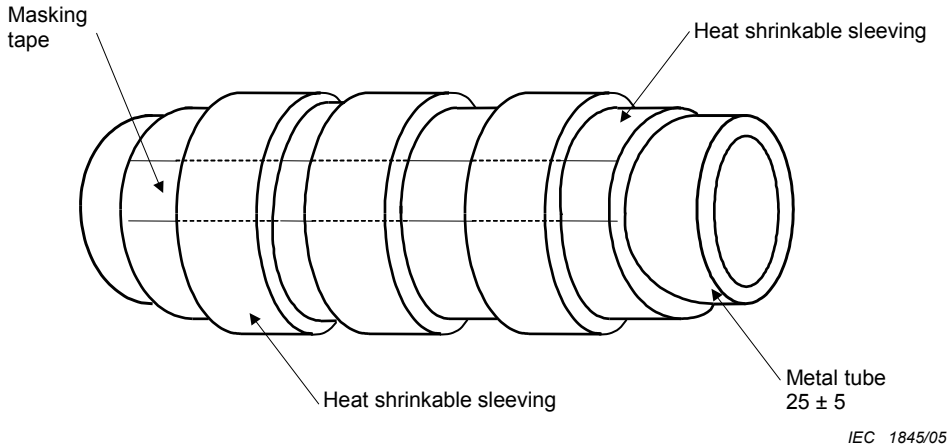

NOTE Dimensions are nominal unless otherwise specified.

Figure 22 – Mandrel assembly

Place the three lengths of the second heat-shrinkable sleeving, abraded on the inside, over the adhesive and adhesive masking tape, as shown in Figure 22. Recover and condition according to the manufacturer's or supplier's instructions and allow the tube assembly to cool to room temperature. Cut the bonded assembly off the mandrel, following one edge of the adhesive masking tape as shown in Figure 23. Cut approximately 25 mm wide specimens from the centre of each set of bonded sleevings as shown in Figure 24.

Dimensions in millimetres

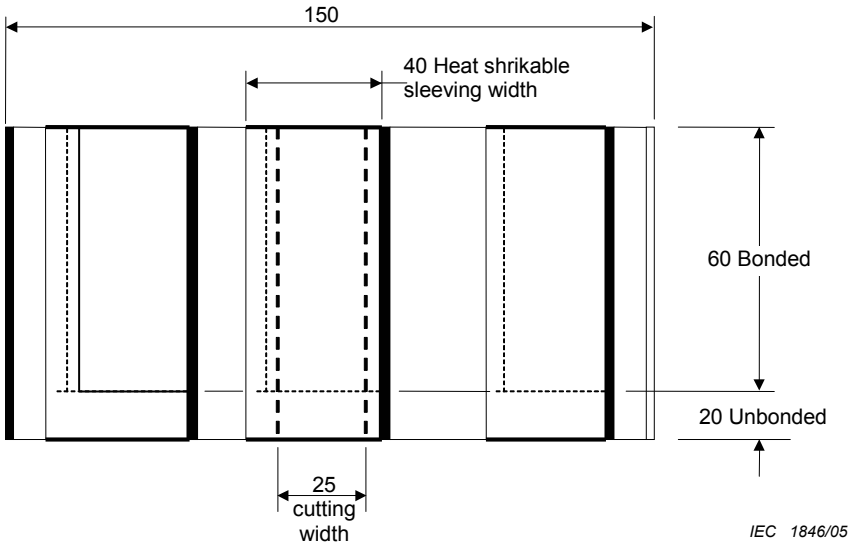

NOET Dimensions are nominal unless otherwise specified.

Figure 23 – Slab specimen

Copyright International Electrotechnical Commission
Provided by IHS under license with IEC
No reproduction or networking permitted without license from IHS Not for Resale

Dimensions in millimetres

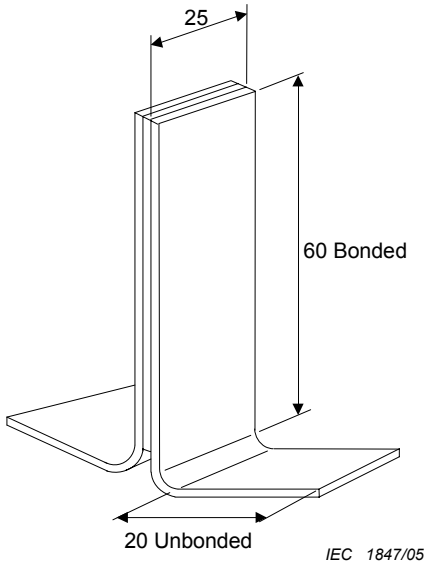

NOTE Dimensions are nominal unless otherwise specified.

Figure 24 – T peel strength specimen

57.4 Procedure

Measure the average width (mm) of each of the three T peel specimens. Insert the free ends of each specimen into the jaws of the tensile testing machine. Pull the specimens at a jaw separation speed of (50 ± 5) mm/min. Record the peel force over the entire peeling operation. Calculate the average peel force by ignoring the first and last 10 % of the peel trace, take 5 readings at equal distances apart from the remainder of the peel trace, add together and then divide by 5.

Calculate the T peel strength using the following formula:

$$\text{T peel strength (N/25 mm)} = \frac{\text{Average peel force (N)} \times 25}{\text{Average specimen width (mm)}}$$

57.5 Result

The result shall be the mean of the three T peel strengths

Copyright International Electrotechnical Commission
Provided by IHS under license with IEC
No reproduction or networking permitted without license from IHS Not for Resale

Copyright International Electrotechnical Commission
Provided by IHS under license with IEC
No reproduction or networking permitted without license from IHS
Not for Resale

ISBN 2-8318-8303-2



ICS 29.035.20

Typeset and printed by the IEC Central Office
GENEVA, SWITZERLAND

Copyright International Electrotechnical Commission
Provided by IHS under license with IEC
No reproduction or networking permitted without license from IHS

Not for Resale