INTERNATIONAL STANDARD

IEC 60601-2-13

Third edition
2003-05

Medical electrical equipment –

Part 2-13: Particular requirements for the safety and essential performance of anaesthetic systems

Appareils électromédicaux –

Partie 2-13:
Règles particulières de sécurité et performance essentielle pour les systèmes d'anesthésie

Reference number
IEC 60601-2-13:2003(E)

Copyright International Electrotechnical Commission
Provided by IHS under license with IEC
No reproduction or networking permitted without license from IHS
Not for Resale

Publication numbering

As from 1 January 1997 all IEC publications are issued with a designation in the 60000 series. For example, IEC 34-1 is now referred to as IEC 60034-1.

Consolidated editions

The IEC is now publishing consolidated versions of its publications. For example, edition numbers 1.0, 1.1 and 1.2 refer, respectively, to the base publication, the base publication incorporating amendment 1 and the base publication incorporating amendments 1 and 2.

Further information on IEC publications

The technical content of IEC publications is kept under constant review by the IEC, thus ensuring that the content reflects current technology. Information relating to this publication, including its validity, is available in the IEC Catalogue of publications (see below) in addition to new editions, amendments and corrigenda. Information on the subjects under consideration and work in progress undertaken by the technical committee which has prepared this publication, as well as the list of publications issued, is also available from the following:

- **IEC Web Site (www.iec.ch)**

- **Catalogue of IEC publications**

  The on-line catalogue on the IEC web site (http://www.iec.ch/searchpub/cur_fut.htm) enables you to search by a variety of criteria including text searches, technical committees and date of publication. On-line information is also available on recently issued publications, withdrawn and replaced publications, as well as corrigenda.

- **IEC Just Published**

  This summary of recently issued publications (http://www.iec.ch/online_news/justpub/jp_entry.htm) is also available by email. Please contact the Customer Service Centre (see below) for further information.

- **Customer Service Centre**

  If you have any questions regarding this publication or need further assistance, please contact the Customer Service Centre:

  Email: custserv@iec.ch
  Tel: +41 22 919 02 11
  Fax: +41 22 919 03 00

--`,,```,,,,````-`-`,,`,,`,`,,`---

Copyright International Electrotechnical Commission
Provided by IHS under license with IEC
No reproduction or networking permitted without license from IHS Not for Resale

INTERNATIONAL STANDARD

IEC 60601-2-13

Third edition
2003-05

Medical electrical equipment –

Part 2-13: Particular requirements for the safety and essential performance of anaesthetic systems

Appareils électromédicaux –

Partie 2-13:
Règles particulières de sécurité et performance essentielle pour les systèmes d'anesthésie

© IEC 2003

All rights reserved. Unless otherwise specified, no part of this publication may be reproduced or utilized in any form or by any means, electronic or mechanical, including photocopying and microfilm, without permission in writing from the publisher.

IEC Copyright Office • Case postale 56 • CH-1211 Genève 20 • Switzerland



PRICE CODE X

For price, see current catalogue

Copyright International Electrotechnical Commission
Provided by IHS under license with IEC
No reproduction or networking permitted without license from IHS

Not for Resale

CONTENTS

FOREWORD 4
INTRODUCTION 6

SECTION ONE – GENERAL

1 Scope and object 7
2 Terminology and definitions 10
3 General requirements 12
4 General requirements for tests 12
6 Identification, marking and documents 12

SECTION TWO – ENVIRONMENTAL CONDITIONS

10 Environmental conditions 16

SECTION THREE – PROTECTION AGAINST ELECTRIC SHOCK HAZARDS

SECTION FOUR – PROTECTION AGAINST MECHANICAL HAZARDS

SECTION FIVE – PROTECTION AGAINST HAZARDS FROM UNWANTED OR EXCESSIVE RADIATION

SECTION SIX – PROTECTION AGAINST HAZARDS OF IGNITION OF FLAMMABLE ANAESTHETIC MIXTURES

SECTION SEVEN – PROTECTION AGAINST EXCESSIVE TEMPERATURES AND OTHER SAFETY HAZARDS

*43 Fire prevention 18
44 Overflow, spillage, leakage, humidity, ingress of liquids, cleaning, sterilization and disinfection 18
49 Interruption of the POWER SUPPLY 19

SECTION EIGHT – ACCURACY OF OPERATING DATA AND PROTECTION AGAINST HAZARDOUS OUTPUT

51 Protection against hazardous output 19

SECTION NINE – ABNORMAL OPERATION AND FAULT CONDITIONS ENVIRONMENTAL TESTS

52 Abnormal opertion and fault conditions 23

SECTION TEN – CONSTRUCTIONAL REQUIREMENTS

54 General 24
56 Components and general assembly 24
57 MAINS PARTS, components and layout 24

Copyright International Electrotechnical Commission
Provided by IHS under license with IEC
No reproduction or networking permitted without license from IHS Not for Resale

SECTION 101 – ADDITIONAL CLAUSES SPECIFIC TO ANAESTHETIC GAS DELIVERY SYSTEMS

101 Medical gas supply....25
102 Medical gas pipeline inlet connections....25
103 Medical gas supply pressure monitoring....26
104 Medical gas supply PRESSURE REGULATORS....26
105 Anaesthetic gas delivery system piping....26
106 Gas flow metering....27
107 Gas mixer....28
108 Oxygen flush....29
109 Fresh gas outlet....29
110 Checklist....29

Annex AA (informative) Guidance and rationale for particular clauses and subclauses in this particular standard....30
Annex BB (informative) MONITORING DEVICES, ALARM SYSTEM(S) and PROTECTION DEVICES....34
Annex CC (informative) Separate devices of an ANAESTHETIC SYSTEM....35
Annex DD (normative) Test for flammability of anaesthetic agent....37
Annex EE (informative) Clauses of this International Standard addressing the essential requirements or other provisions of EU directives....38

Bibliography....43
Index of defined terms....44

Figure 101 – Profile of oxygen flow control knob for applications other than anaesthetic vapour delivery device flow control (See 106.3)....28

Table 101 – Test conditions for expiratory volume tests....21
Table 102 – Force of axial pulls....25
Table BB.1 – Summary of the relationship of MONITORING DEVICES, ALARM SYSTEM(S) and PROTECTION DEVICES with regard to delivery devices....34
Table CC.1 – Applicable requirement clauses for separate devices of an ANAESTHETIC SYSTEM....35
Table EE.1 – Correspondence between this International Standard and EEC Directive 93/42/EEC....38

Copyright International Electrotechnical Commission
Provided by IHS under license with IEC
No reproduction or networking permitted without license from IHS Not for Resale

INTERNATIONAL ELECTROTECHNICAL COMMISSION

MEDICAL ELECTRICAL EQUIPMENT –

Part 2-13: Particular requirements for the safety and essential performance of anaesthetic systems

FOREWORD

1) The IEC (International Electrotechnical Commission) is a worldwide organization for standardization comprising all national electrotechnical committees (IEC National Committees). The object of the IEC is to promote international co-operation on all questions concerning standardization in the electrical and electronic fields. To this end and in addition to other activities, the IEC publishes International Standards. Their preparation is entrusted to technical committees; any IEC National Committee interested in the subject dealt with may participate in this preparatory work. International, governmental and non-governmental organizations liaising with the IEC also participate in this preparation. The IEC collaborates closely with the International Organization for Standardization (ISO) in accordance with conditions determined by agreement between the two organizations.
2) The formal decisions or agreements of the IEC on technical matters express, as nearly as possible, an international consensus of opinion on the relevant subjects since each technical committee has representation from all interested National Committees.
3) The documents produced have the form of recommendations for international use and are published in the form of standards, technical specifications, technical reports or guides and they are accepted by the National Committees in that sense.
4) In order to promote international unification, IEC National Committees undertake to apply IEC International Standards transparently to the maximum extent possible in their national and regional standards. Any divergence between the IEC Standard and the corresponding national or regional standard shall be clearly indicated in the latter.
5) The IEC provides no marking procedure to indicate its approval and cannot be rendered responsible for any equipment declared to be in conformity with one of its standards.
6) Attention is drawn to the possibility that some of the elements of this International Standard may be the subject of patent rights. The IEC shall not be held responsible for identifying any or all such patent rights.

International Standard IEC 60601-2-13 has been developed by a Joint Working Group consisting of IEC/SC 62D, Electromedical equipment, of IEC technical committee 62: Electrical equipment in medical practice, and ISO TC 121/SC 1, Breathing attachments and anaesthetic machines.

It is published as double logo standard.

This third edition cancels and replaces the second edition published in 1998. This edition constitutes a technical revision.

The text of this Particular Standard is based on the following documents:

FDIS	Report on voting
62D/475/FDIS	62D/476/RVD

Full information on the voting for the approval of this Particular Standard can be found in the report on voting indicated in the above table. In ISO, the standard has been approved by 13 P-members out of 13 having cast a vote.

This publication has been drafted in accordance with the ISO/IEC Directives, Part 2.

In this Particular Standard, the following print types are used:

– requirements, compliance with which can be tested and definitions: roman type;

– explanations, advice, notes, general statements, exceptions and references: smaller type;

--`,,```,,,,````-`-`,,`,,`,`,,`---
Copyright International Electrotechnical Commission
Provided by IHS under license with IEC
No reproduction or networking permitted without license from IHS Not for Resale

– *test specifications: italic type*;

– TERMS DEFINED IN CLAUSE 2 OF THE GENERAL STANDARD OR OF THIS PARTICULAR STANDARD: SMALL CAPITALS.

The committee has decided that the contents of this publication will remain unchanged until 2007. At this date, the publication will be

- reconfirmed;
- withdrawn;
- replaced by a revised edition, or
- amended.

--`,,```,,,,````-`-`,,`,,`,`,,`---

Copyright International Electrotechnical Commission
Provided by IHS under license with IEC
No reproduction or networking permitted without license from IHS Not for Resale

INTRODUCTION

In response to requests for harmonization between the current European and International standards for anaesthetic workstations this standard has been developed by the IEC/ISO Joint Working Group to specify requirements for ANAESTHETIC SYSTEMS supplied complete, as well as requirements for individual devices which are intended to be part of an ANAESTHETIC SYSTEM. It applies in conjunction with IEC 60601-1:1988 (Including all amendments) hereafter referred to as the General Standard. As stated in 1.3 of IEC 60601-1-1988, the requirements in this standard take priority over those of the General Standard.

This standard has been structured to allow USERS to configure an ANAESTHETIC SYSTEM in conformance with professional guidelines and to meet the needs of their clinical practice. In order to achieve this aim, the standard identifies particular requirements pertinent to specific devices, and to their associated MONITORING DEVICE(S), ALARM SYSTEM(s) and PROTECTION DEVICE(S), and defines the interfaces. This standard also specifies requirements for optional devices, together with their respective MONITORING DEVICE(S), ALARM SYSTEM(S) and PROTECTION DEVICE(S).

The indicated requirements are followed by specifications for the relevant tests. An asterisk (*) denotes clauses for which there is a rationale comment in Annex AA. It is considered that knowledge of the reasons for these requirements will facilitate the proper application of the standard and be of use in any revision that may be necessitated by changes in clinical practice or as a result of developments in technology.

NOTE The decimal separator for all numeric values is "," (comma).

The following graphic representation of the structure of this standard is being provided for informational purposes only.

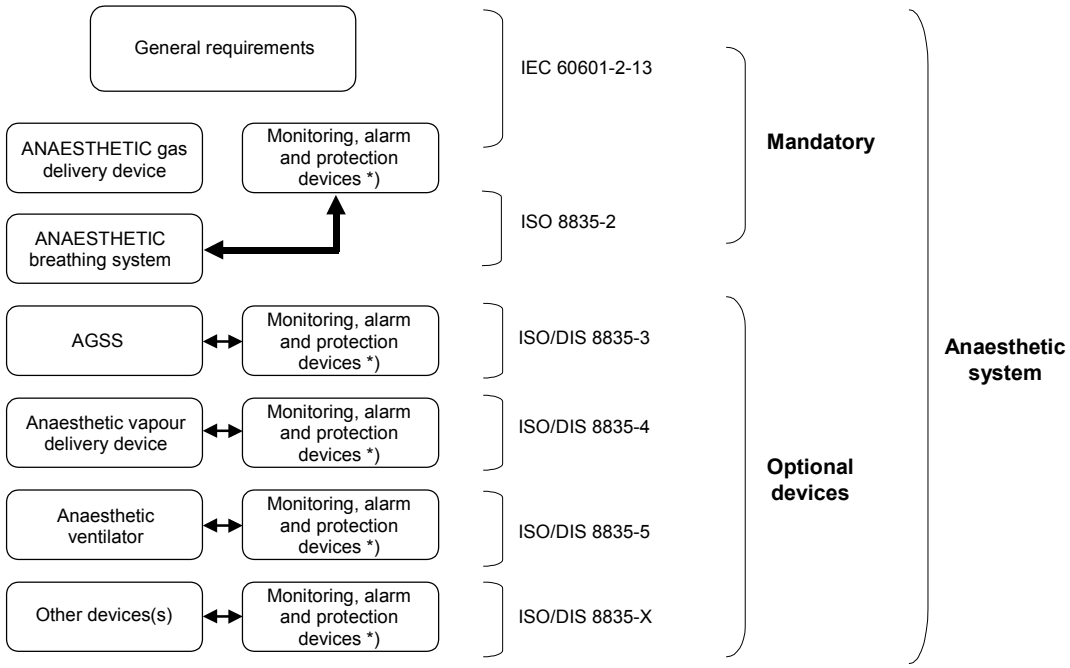

Copyright International Electrotechnical Commission
Provided by IHS under license with IEC
No reproduction or networking permitted without license from IHS Not for Resale

MEDICAL ELECTRICAL EQUIPMENT–

Part 2-13: Particular requirements for the safety and essential performance of anaesthetic systems

SECTION ONE – GENERAL

The clauses and subclauses of this section of the General Standard apply except as follows:

1 Scope and object

This clause of the General Standard applies except as follows:

1.1 Scope

Addition

This Particular Standard specifies safety and essential performance requirements for an ANAESTHETIC SYSTEM (as defined in 2.101.7) as well as individual devices designed for use in an ANAESTHETIC SYSTEM.

This Particular Standard does not apply to:

– ANAESTHETIC SYSTEM(S) intended for use with flammable anaesthetic agents, as determined by Annex DD,

– portable ANAESTHETIC SYSTEM(S) for use in remote sites, open fields for rescue operations or in disaster areas,

– dental analgesia apparatus.

1.2 Object

Replacement:

The object of this Particular Standard is to specify particular safety and essential performance requirements for individual devices designed for use in an ANAESTHETIC SYSTEM as well as specific requirements for the ANAESTHETIC GAS DELIVERY SYSTEM. This standard specifies requirements and defines interfaces for:

– individual devices designed for use in an ANAESTHETIC SYSTEM(S), and

– integrated ANAESTHETIC SYSTEMS.

1.3 Particular Standards

This Particular Standard amends and supplements a set of IEC publications consisting of IEC 60601-1:1988, *Medical electrical equipment – Part 1: General requirements for safety*, its amendment 1 (1991) and amendment 2 (1995), hereinafter referred to as the “General Standard”.

The General Standard takes into account IEC 60601-1-1:2000, *Medical electrical equipment – Part 1-1: General requirements for safety – Collateral standard: Safety requirements for medical electrical systems* and IEC 60601-1-2 2001, *Medical electrical equipment – Part 1-2: General requirements for safety – Collateral standard: Electromagnetic compatibility – Requirements and tests.*

Copyright International Electrotechnical Commission
Provided by IHS under license with IEC
No reproduction or networking permitted without license from IHS Not for Resale

The numbering of sections, clauses and subclauses of this Particular Standard corresponds with that of the General Standard. The changes to the text of the General Standard are specified by the use of the following words:

“Replacement” means that the clause or subclause of the General Standard is replaced completely by the text of this Particular Standard.

“Addition” means that the text of this Particular Standard is additional to the requirements of the General Standard.

“Amendment” means that the clause or subclause of the General Standard is amended as indicated by the text of this Particular Standard.

Subclauses or figures which are additional to those of the General Standard are numbered starting from 101, additional annexes are lettered AA, BB, etc., and additional items aa), bb), etc.

The term "this standard" covers this Particular Standard, used together with the General Standard and the Collateral Standards.

Where there is no corresponding section, clause or subclause in this Particular Standard, the section, clause or subclause of the General Standard, although possibly not relevant, applies without modification.

Where it is intended that any part of the General Standard, although possibly relevant, is not to be applied, a statement to that effect is given in this Particular Standard.

The requirements of this Particular Standard replacing or modifying requirements of the General Standard or a Collateral Standard take precedence over the corresponding general requirement(s).

1.3.101 Related International Standards

The following referenced documents are indispensable for the application of this document. For dated references, only the edition cited applies. For undated references, the latest edition of the referenced document (including any amendments) applies.

IEC 60079-4:1975, *Electrical apparatus for explosive gas atmospheres – Part 4: Method of test for ignition temperature*

IEC 60079-11:1999, *Electrical apparatus for explosive gas atmospheres – Part 11: Intrinsic safety"*

ISO 32:1977, *Gas cylinders for medical use – Marking for identification of content*

ISO 407:1991, *Small medical gas cylinders – Pin-index yoke-type valve connections*

ISO 3746:1995, *Acoustics – Determination of sound power levels of noise sources using sound pressure – Survey method using an enveloping measurement surface over a reflecting plane*

ISO 4135:2001, *Anaesthetic and respiratory equipment – Vocabulary*

ISO 5145:1990, *Cylinder valve outlets for gases and gas mixtures – Selection and dimensioning*

--`,,```,,,,````-`-`,,`,,`,`,,`---

Copyright International Electrotechnical Commission
Provided by IHS under license with IEC
No reproduction or networking permitted without license from IHS Not for Resale

ISO 5356-1:1996, *Anaesthetic and respiratory equipment – Conical connectors – Part 1: Cones and sockets*

ISO 5356-2:1987, *Anaesthetic and respiratory equipment – Conical connectors – Part 2: Screw-threaded, weight-bearing connectors*

ISO 5359:2000, *Low-pressure hose assemblies for use with medical gases*

ISO 5362:2000, *Anaesthetic reservoir bags*

ISO 7396-1:2002, *Medical gas pipeline systems – Part 1: Pipelines for compressed medical gases and vacuum*

ISO 7767:1997, *Oxygen monitors for monitoring patient breathing mixtures – Safety requirements*

ISO 8835-2:1999, *Inhalational anaesthesia systems – Part 2: Anaesthetic breathing systems for adults*

ISO 8835-3:1997, *Inhalational anaesthesia systems – Part 3: Anaesthetic gas scavenging systems – Transfer and receiving systems*

ISO 8835-4, *Inhalational anaesthesia systems – Part 4: Anaesthetic vapour delivery devices* [1)]

ISO 8835-5, *Inhalational anaesthesia systems – Part 5: Requirements for anaesthetic ventilators* [2)]

ISO 9170-1:1999, *Terminal units for medical gas pipeline systems – Part 1: Terminal units for use with compressed medical gases and vacuum*

ISO 9703-1:1992, *Anaesthesia and respiratory care alarm signals – Part 1: Visual alarm signals*

ISO 9703-2:1994, *Anaesthesia and respiratory care alarm signals – Part 2: Auditory alarm signals*

ISO 9703-3, *Anaesthesia and respiratory care alarm signals – Part 3: Guidance on application of alarms*

ISO 9918:1993, *Capnometers for use with humans – Requirements*

ISO 10524:1995, *Pressure regulators and pressure regulators with flow-metering devices for medical gas systems*

ISO 11196:1996, *Anaesthetic gas monitors*

ISO 15223:2000, *Medical devices – Symbols to be used with medical device labels, labelling and information to be supplied*

---

1) To be published.

2) To be published.

Copyright International Electrotechnical Commission
Provided by IHS under license with IEC
No reproduction or networking permitted without license from IHS Not for Resale

2 Terminology and definitions

This clause of the General Standard applies except as follows:

Addition before 2.1:

An index of defined terms used in this Particular Standard is given after the annexes.

Additional definitions:

2.101.1
ALARM CONDITION
condition that occurs when a variable that is being monitored by an ALARM SYSTEM equals or falls outside the set ALARM LIMIT(S)

2.101.2
ALARM LIMIT
value(s) which are set by the manufacturer, the device, the USER or OPERATOR, which define the threshold range of the ALARM CONDITION

2.101.3
ALARM SIGNAL
signal, the purpose of which is to alert the OPERATOR of an abnormal condition in the PATIENT or the EQUIPMENT that may develop into a SAFETY HAZARD which requires OPERATOR awareness or action

2.101.4
ALARM SYSTEM
system that is intended to make the OPERATOR(S) aware of an ALARM CONDITION, in the PATIENT or EQUIPMENT, by means of its ALARM SIGNAL(S)

2.101.5
ANAESTHETIC GAS DELIVERY SYSTEM
assembly of components which controls and delivers the fresh gas into the ANAESTHETIC BREATHING SYSTEM

NOTE It may include a flow control system, flow meters and/or a gas mixing system and ANAESTHETIC GAS DELIVERY SYSTEM PIPING.

2.101.6
ANAESTHETIC GAS DELIVERY SYSTEM PIPING
all pipework, including unions, from unidirectional valves in the pipeline inlets and from the outlets of the PRESSURE REGULATOR(S) to the flow control system, as well as the piping connecting the flow control system and the piping connecting the ANAESTHETIC VAPOUR DELIVERY DEVICE to the FRESH GAS OUTLET. It includes piping leading to and from pneumatic ALARM SYSTEM(S), pressure indicators, oxygen flush and gas power outlets

2.101.7
ANAESTHETIC SYSTEM (ANAESTHETIC WORKSTATION)
inhalational ANAESTHETIC SYSTEM that contains an ANAESTHETIC GAS DELIVERY SYSTEM, an ANAESTHETIC BREATHING SYSTEM and the required MONITORING DEVICE(S), ALARM SYSTEM(S), and PROTECTION DEVICES

NOTE The ANAESTHETIC SYSTEM can also include, but is not limited to, ANAESTHETIC VAPOUR DELIVERY DEVICE(S), ANAESTHETIC VENTILATOR(S), anaesthetic gas scavenging systems, and their associated MONITORING DEVICE(S), ALARM SYSTEM(S) and PROTECTION DEVICE(S).

2.101.8
ANAESTHETIC VAPOUR DELIVERY DEVICE
device which provides the vapour of an anaesthetic agent in a controllable concentration

Copyright International Electrotechnical Commission
Provided by IHS under license with IEC
No reproduction or networking permitted without license from IHS Not for Resale

2.101.9
ANAESTHETIC VENTILATOR
automatic device, which is connected via the ANAESTHETIC BREATHING SYSTEM to the PATIENT'S airway and is designed to augment or provide ventilation of the PATIENT during anaesthesia

2.101.10
ANNUNCIATION, ANNUNCIATE, ANNUNCIATING
communication of ALARM SIGNALS to the OPERATOR

2.101.11
DISABLE, DISABLED
state of indefinite duration in which the ALARM SYSTEM or part of the ALARM SYSTEM does not ANNUNCIATE an auditory ALARM SIGNAL

2.101.12
LEGIBLE
displayed qualitative or quantitative information, values, functions, and/or markings discernible or identifiable to an OPERATOR with 6-6 (20/20) vision (corrected if necessary) from a distance of 1 m at a light level of 215 lux, when viewing the information, markings, etc perpendicular to and including 15° above, below, left and right of the normal line of sight of the OPERATOR

2.101.13
MONITORING DEVICE
device which continuously or repeatedly measures and indicates the value of a variable to the OPERATOR

2.101.14
NON-LATCHING ALARM SIGNAL
ALARM SIGNAL that automatically stops ANNUNCIATING when its associated ALARM CONDITION no longer exists

2.101.15
OXYGEN RICH ENVIRONMENT
environment in which the partial pressure of oxygen is greater than 275 hPa

2.101.16
POWER SUPPLY
source of energy other than that generated directly by the human body or by gravity that makes the device function

2.101.17
PROTECTION DEVICE
device which, without intervention by the OPERATOR protects the PATIENT from hazardous output due to incorrect delivery of energy or substances

2.101.18
RESERVE ELECTRICAL POWER SOURCE
part of EQUIPMENT that temporarily supplies power to the electrical system in the event of an interruption of the primary electrical supply

2.101.19
SILENCE, SILENCED
state of temporary duration in which the ALARM SYSTEM or part of the ALARM SYSTEM does not ANNUNCIATE an auditory ALARM SIGNAL

--`,,```,,,,````-`-`,,`,,`,`,,`---

Copyright International Electrotechnical Commission
Provided by IHS under license with IEC
No reproduction or networking permitted without license from IHS Not for Resale

3 General requirements

This clause of the General Standard applies except as follows:

3.6 *Addition:*

An oxidant leak which is not detected by e.g. an ALARM SYSTEM or periodic inspection shall be considered a NORMAL CONDITION and not a SINGLE FAULT CONDITION.

4 General requirements for tests

This clause of the General Standard applies except as follows:

Addition:

4.101 Other test methods

The manufacturer may use type tests different from those detailed within this standard, if an equivalent degree of compliance is obtained. However, in the event of dispute, the methods specified in this standard shall be used as the reference methods.

6 Identification, marking and documents

This clause of the General Standard applies except as follows:

6.1 Marking on the outside of EQUIPMENT or EQUIPMENT parts

*j) *Power input*

Addition (after the existing last sentence):

The RATED power input marking shall include the maximum RATED power output available to the AUXILIARY MAINS SOCKET OUTLET(S), with which the ANAESTHETIC SYSTEM is equipped.

*k) *Mains power output*

Replacement:

Each AUXILIARY MAINS SOCKET OUTLET shall be marked with its RATED output in units of amperes. If AUXILIARY MAINS SOCKET OUTLET(S) can accept a standard mains plug, the AUXILIARY MAINS SOCKET OUTLET shall be marked with symbol 14 of Table D.1 of the General Standard.

Addition:

aa) The ANAESTHETIC SYSTEM and/or its devices

The ANAESTHETIC SYSTEM and/or its devices shall be legibly marked with the following information as applicable:

1) the name or trade name and address of the manufacturer;
2) the name and address of the distributor/supplier;
3) the symbol for “batch code“, or “serial number” (see ISO 15223);
4) a LEGIBLE arrow showing the direction of flow for any OPERATOR-detachable components or devices that are flow-direction-sensitive unless designed in such a way that prevents incorrect assembly;
5) each OPERATOR – accessible gas specific inlet and outlet shall be marked with:

Copyright International Electrotechnical Commission
Provided by IHS under license with IEC
No reproduction or networking permitted without license from IHS Not for Resale

a) the gas name or chemical symbol in accordance with ISO 5359, if colour coding is used it shall be in accordance with ISO 32.

b) the RATED supply pressure range in SI units;

6) status of oxygen flow and anaesthetic vapour flow in the event of interruption of the supply mains.

Alternatively the following may be marked on the packaging:

7) an indication of the latest date after which the device may not be put into service; expressed as the year and month.(e.g. symbol given in ISO 15223);

8) an indication, e.g. symbol given in ISO 15223, that the device is not for reuse;

9) the year of manufacture except for single use devices and those covered by the date of expiry (see ISO 15223);

10) means to differentiate between the same or similar products (both sterile and non-sterile) placed on the market by the same manufacturer;

11) details necessary to identify the device and the contents of packaging if the intended purpose of the device is not obvious to the operator;

12) any special operating instructions.

bb) Additions specific to ANAESTHETIC GAS DELIVERY SYSTEM

– If operator-accessible, the fresh gas outlet shall be marked.

6.3 Marking of controls and instruments

Addition:

aa) All cylinder and pipeline pressure indicators shall be graduated in SI units and identified with the gas name or the chemical symbol in accordance with ISO 5359. If colour coding is used it shall be in accordance with ISO 32.

NOTE Additional units, for example bar may be used.

bb) All markings shall be durable and LEGIBLE and if color coding is used it shall be in accordance with ISO 32. If the gas name or chemical symbol is used it shall be in accordance with ISO 5359.

cc) Additions specific to anaesthetic gas delivery system

– Each flow adjustment control shall be identified with the gas that it controls, and be marked with an indication how to increase and decrease the gas flow;

– If applicable, the point of reference for reading the flow indication shall be identified;

– The oxygen flush control shall be marked with one of the following:

“OXYGEN FLUSH”

“O_2 FLUSH”

“O_2 +”

6.8 ACCOMPANYING DOCUMENTS

6.8.2 Instructions for use

Additions:

aa) The instructions for use shall contain a statement to the effect that the ANAESTHETIC SYSTEM is intended to be used with the following MONITORING DEVICE(S), ALARM SYSTEM(S), and PROTECTION DEVICES, and unless the following are integral to the ANAESTHETIC GAS

--`,,```,,,,````-`-`,,`,,`,`,,`---

Copyright International Electrotechnical Commission
Provided by IHS under license with IEC
No reproduction or networking permitted without license from IHS Not for Resale

DELIVERY SYSTEM, the manufacturer/supplier of the ANAESTHETIC GAS DELIVERY SYSTEM shall provide information how to connect these devices:

- pressure measuring in accordance with 8.1 of ISO 8835-2;
- pressure limitation device in accordance with 51.101.1;
- exhaled volume monitor in accordance with 51.101.4;
- breathing system integrity ALARM SYSTEM in accordance with 51.101.5;
- continuing pressure alarm in accordance with 51.101.6;
- O_2 monitor in accordance with ISO 7767;
- CO_2 monitor in accordance with ISO 9918.

bb) The instructions for use shall contain a statement to the effect that any adult ANAESTHETIC BREATHING SYSTEM used with the ANAESTHETIC GAS DELIVERY SYSTEM shall comply with ISO 8835-2.

Unless the ANAESTHETIC BREATHING SYSTEM is integral to the ANAESTHETIC GAS DELIVERY SYSTEM, the manufacturer/supplier of the ANAESTHETIC GAS DELIVERY SYSTEM shall provide information on how to connect an ANAESTHETIC BREATHING SYSTEM.

cc) The instructions for use shall contain a statement to the effect that an ANAESTHETIC VAPOUR DELIVERY DEVICE used with the ANAESTHETIC SYSTEM shall comply with ISO 8835-4.

Unless the ANAESTHETIC VAPOUR DELIVERY DEVICE is integral to the ANAESTHETIC GAS DELIVERY SYSTEM, the manufacturer/supplier of the ANAESTHETIC GAS DELIVERY SYSTEM shall provide information on how to connect an ANAESTHETIC VAPOUR DELIVERY DEVICE.

dd) The instructions for use shall contain a statement to the effect that, if the ANAESTHETIC SYSTEM is designed to be equipped with an ANAESTHETIC VAPOUR DELIVERY DEVICE, the ANAESTHETIC VAPOUR DELIVERY DEVICE is to be used with an ANAESTHETIC AGENT MONITOR complying with ISO 11196.

Unless the ANAESTHETIC AGENT MONITOR is an integral part of the ANAESTHETIC SYSTEM the manufacturer/supplier of the ANAESTHETIC SYSTEM shall provide information on how to connect an ANAESTHETIC AGENT MONITOR.

ee) The instructions for use shall contain a statement to the effect that, if the ANAESTHETIC SYSTEM is designed to be equipped with an ANAESTHETIC VENTILATOR, the ANAESTHETIC VENTILATOR shall comply with the requirements of ISO 8835-5.

Unless the ANAESTHETIC VENTILATOR is an integral part of the ANAESTHETIC SYSTEM the manufacturer/supplier of the ANAESTHETIC SYSTEM shall provide information on how to connect an ANAESTHETIC VENTILATOR.

ff) The instructions for use of ANAESTHETIC SYSTEM(S) and/or individual devices shall provide information on the method of enabling the ANAESTHETIC SYSTEM or individual devices including the MONITORING DEVICE(S), ALARM SYSTEM(S) and PROTECTION DEVICE(S) required by this standard.

NOTE This information may form part of the pre-use checklist.

gg) The instructions for use shall state the conditions (e.g. ambient temperature and pressure saturated (ATPS), body temperature and pressure saturated (BTPS), standard temperature and pressure dry (STPD)) under which the measured values are displayed.

hh) The instructions for use shall state whether the ANAESTHETIC SYSTEM or individual device is suitable for use in a magnetic resonance imaging (MRI) environment and any related restrictions.

Copyright International Electrotechnical Commission
Provided by IHS under license with IEC
No reproduction or networking permitted without license from IHS Not for Resale

*ii) The instructions for use shall contain a statement to the effect that, IEC 60601-1-1 applies both for combinations of items of MEDICAL ELECTRICAL EQUIPMENT and for combinations of at least one item of MEDICAL ELECTRICAL EQUIPMENT with one or more items of NON-MEDICAL ELECTRICAL EQUIPMENT. Even if there is no functional connection between the individual pieces of equipment, when they are connected to an AUXILLIARY MAINS SOCKET OUTLET they constitute a MEDICAL ELECTRICAL SYSTEM. It is essential that OPERATORS are aware of the risks of increased leakage currents when equipment is connected to an AUXILLIARY MAINS SOCKET OUTLET.

jj) The instructions for use shall contain a statement to the effect that FLAMMABLE ANAESTHETIC AGENTS such as diethyl ether and cyclopropane shall not be used in the ANAESTHETIC SYSTEM. Only anaesthetic agents which comply with the requirements for NON-FLAMMABLE ANAESTHETIC AGENTS as specified in Annex DD of this Particular Standard are suitable for use in the ANAESTHETIC SYSTEM.

kk) The instructions for use shall contain a list of ALARM SYSTEMS to be tested, the methods of verifying their correct function, and the recommended frequency of verification. The list shall include, as a minimum, the ALARM SYSTEMS required by this standard.

NOTE 1 Risk analysis may determine the necessity of verifying any additional ALARM SYSTEMS.

NOTE 2 The correct function of an ALARM SYSTEM may be checked by a built-in self test.

ll) The instructions for use shall contain a statement to the effect that, if AUXILIARY MAINS SOCKET OUTLET(S) are provided, the connection of EQUIPMENT to the AUXILIARY MAINS SOCKET OUTLET(S) may increase the leakage currents to values exceeding the allowable limits.

mm) The instructions for use shall contain instructions for testing for correct assembly and connection of each gas supply.

nn) The instructions for use shall contain recommended methods of cleaning, disinfection or sterilization prior to first use.

oo) The instructions for use shall contain a statement to the effect that independent means of ventilation (e.g. a self-inflating manually powered resuscitator with mask) be available whenever the ANAESTHETIC SYSTEM is in use.

pp) The instructions for use shall disclose all alarm limit(s) that are factory pre-set.

qq) The instructions for use shall disclose the presence of all latex based components and their location.

rr) The instructions for use shall disclose, any restriction on re-use for re-usable components.

ss) The instructions for use shall disclose risks related to disposal, and precautions to be taken to avoid such risks.

tt) The instructions for use shall disclose configuration(s) and condition(s) under which Clause 24 of the General Standard is met.

uu) The instructions for use shall disclose the location of and instructions relevant to any filter elements to be replaced by the operator.

vv) The instructions for use shall contain a description of the functioning of the ANAESTHETIC SYSTEM or individual device after interruption of the power supply, and where applicable the functioning of the ANAESTHETIC SYSTEM or individual devices after a switch-over to a reserve power supply.

Copyright International Electrotechnical Commission
Provided by IHS under license with IEC
No reproduction or networking permitted without license from IHS Not for Resale

ww) The instructions for use shall disclose, where applicable, all information necessary for the connection to an ANAESTHETIC VENTILATOR recommended for use with the ANAESTHETIC SYSTEM.

xx) The instructions for use shall disclose, if provided, the minimum detectable exhaled volume, the accuracy of the indicated exhaled volumes and the resolution of the exhaled volume monitor when tested according to 51.101.4.

yy) The instructions for use shall include the information required in item a) of 6.8.3 of the General Standard.

zz) The instructions for use shall disclose, where applicable, the medical gas pipeline supply pressure(s) at which the ANAESTHETIC SYSTEM will cease to deliver gas.

aaa) The instructions for use shall contain a statement to the effect that a malfunction of the central gas supply system may cause more than one or even all devices connected to it to stop their operation simultaneously.

bbb) Manufacturers of ANAESTHETIC GAS DELIVERY SYSTEM(S), MONITORING DEVICE(S), ALARM SYSTEM(S) and PROTECTION DEVICE(S) intended for use in an ANAESTHETIC SYSTEM shall state in the instructions for use that whoever assembles an ANAESTHETIC SYSTEM from individual devices or systems shall provide the checklist for the ANAESTHETIC SYSTEM.

ccc) Additions specific to the ANAESTHETIC GAS DELIVERY SYSTEM

- The instructions for use shall contain the pressure and flow characteristics of any gas power outlet(s) throughout the range of RATED inlet pressures, and at twice the maximum RATED inlet pressure.
- The instructions for use shall contain specifications of the oxygen failure ALARM SYSTEM(S) and if applicable the associated gas cut-off device(s).
- The instructions for use shall contain the range of pressures and flows for which any GAS MIXER is designed. (See 107.2).

6.8.3 Technical description

Additions:

aa) Pressure relief devices

The technical description shall include the operating characteristics and location of any pressure relief devices fitted to the ANAESTHETIC SYSTEM or individual device.

bb) Checklist for the ANAESTHETIC SYSTEM

Manufacturers of ANAESTHETIC GAS DELIVERY SYSTEM(S), MONITORING DEVICE(S), ALARM SYSTEM(S) and PROTECTION DEVICE(S) intended for use in an ANAESTHETIC SYSTEM shall state in the technical description that whoever assembles an ANAESTHETIC SYSTEM from individual devices or systems shall provide the checklist for the ANAESTHETIC SYSTEM.

SECTION TWO – ENVIRONMENTAL CONDITIONS

10 Environmental conditions

This clause of the General Standard applies except as follows:

Copyright International Electrotechnical Commission
Provided by IHS under license with IEC
No reproduction or networking permitted without license from IHS Not for Resale

10.2.1 Environment

Amendment:

The environmental conditions in this subclause apply unless otherwise specified by the manufacturer.

Addition:

*10.2.101 Pneumatic power

The ANAESTHETIC SYSTEM or individual device shall operate and meet the requirements of this Particular Standard throughout the range of inlet pressures specified by the manufacturer, and shall cause no SAFETY HAZARD under a SINGLE FAULT CONDITION of twice the maximum RATED inlet pressure specified by the manufacturer.

In addition, if the ANAESTHETIC SYSTEM or individual device is intended to be connected to either:

– a medical gas pipeline system complying with ISO 7396 via terminal units complying with ISO 9170-1 and flexible hose connections complying with ISO 5359, or

– a PRESSURE REGULATOR complying with ISO 10524,

the following apply:

– the range of pressures specified shall cover the range specified in these standards;

– the time-weighted average input flow (over 10 s) required by the ANAESTHETIC SYSTEM or individual device for each gas shall not exceed 60 l/min at a pressure of 280 kPa measured at the gas inlet port, with the oxygen flush not activated.

NOTE 1 Internal PRESSURE REGULATORs may be required to accommodate the range of operating pressures and SINGLE FAULT CONDITION of maximum inlet pressures.

NOTE 2 Under the SINGLE FAULT CONDITION of overpressure (i.e, twice the maximum RATED inlet pressure specified by the manufacturer) the gas should continue to flow to the ANAESTHETIC BREATHING SYSTEM. Under this condition the flow from the ANAESTHETIC SYSTEM is allowed to be outside the manufacturers specified tolerance.

Test for compliance: The device shall be operated under normal conditions with the most adverse operating settings (e. g. highest driving gas consumption, highest fresh gas delivery and highest nominal gas consumption at any power supply output, if provided, but without activated O_2 flush).

SECTION THREE – PROTECTION AGAINST ELECTRIC SHOCK HAZARDS

The clauses and subclauses of this section of the General Standard apply.

SECTION FOUR – PROTECTION AGAINST MECHANICAL HAZARDS

The clauses and subclauses of this section of the General Standard apply.

SECTION FIVE – PROTECTION AGAINST HAZARDS FROM UNWANTED OR EXCESSIVE RADIATION

The clauses and subclauses of this section of the General Standard apply.

Copyright International Electrotechnical Commission
Provided by IHS under license with IEC
No reproduction or networking permitted without license from IHS Not for Resale

SECTION SIX – PROTECTION AGAINST HAZARDS OF IGNITION OF FLAMMABLE ANAESTHETIC MIXTURES

The clauses and subclauses of this section of the General Standard do not apply.

SECTION SEVEN – PROTECTION AGAINST EXCESSIVE TEMPERATURES AND OTHER SAFETY HAZARDS

*43 Fire prevention

This clause of the General Standard applies except as follows:

43.2 Oxygen rich environments

Addition:

In order to reduce the risk to PATIENTS, to other persons or to the surroundings due to fire, ignitable materials in an OXYGEN RICH ENVIRONMENT under NORMAL and SINGLE FAULT CONDITIONS, shall not, at the same time, be subjected to conditions in which:

– the temperature of the material is raised to its minimum ignition temperature; and
– an oxidant is present.

The minimum ignition temperature is determined in accordance with IEC 60079-4 using the oxidizing conditions present under NORMAL and SINGLE FAULT CONDITIONS.

Compliance is checked by determining the temperature to which the material is raised to under NORMAL and SINGLE FAULT CONDITIONS.

If sparking can occur under NORMAL or SINGLE FAULT CONDITIONS, the material subjected to the energy dissipation of the spark shall not ignite under the oxidizing conditions present.

Compliance is checked by observing if ignition occurs under the most unfavorable combination of NORMAL CONDITIONS with a SINGLE FAULT.

44 Overflow, spillage, leakage, humidity, ingress of liquids, cleaning, sterilization and disinfection

This clause of the General Standard applies accept as follows:

44.3 Spillage

Amendment of the first two lines:

The ANAESTHETIC SYSTEM and individual devices shall be so constructed that spillage does not wet parts which, when wetted, can cause a SAFETY HAZARD.

Compliance is checked by the test given in 44.3 of the General Standard.

44.7 Cleaning, sterilization and disinfection

Amendment:

All components not specified by the manufacturer as for single PATIENT use, which come into contact with the exhaled PATIENT gas that may be re-breathed, shall be capable of being

Copyright International Electrotechnical Commission
Provided by IHS under license with IEC
No reproduction or networking permitted without license from IHS Not for Resale

sterilized or disinfected, unless means are provided for bacterial/viral filtration prior to re-breathing.

Addition:

44.7.101 Non-sterile device packaging systems shall be designed to maintain products which are intended to be sterilized before use at their intended level of cleanliness and to minimize the risk of microbial contamination.

49 Interruption of the POWER SUPPLY

This clause of the General Standard applies except as follows:

Additions:

49.101 Electrical POWER SUPPLY

49.101.1 Means shall be provided to prevent unintentional operation of the "off" switch.

49.101.2 The ANAESTHETIC GAS DELIVERY SYSTEM shall be so designed that in the event of an electrical POWER SUPPLY failure the supply of gas shall either be unaffected, or an alternative means of gas delivery is made available.

An ALARM SIGNAL of at least medium priority shall be activated in the event of an electrical POWER SUPPLY failure (i.e. below the minimum specified by the manufacturer). (See also item vv) of 6.8.2 for instructions for use)

NOTE Electrical POWER SUPPLY failure includes both mains and RESERVE ELECTRICAL POWER SOURCE.

49.101.3 An ALARM SIGNAL of at least low priority shall be activated when there is an automatic switchover to a RESERVE ELECTRICAL POWER SOURCE.

49.101.4 There shall be a means to determine the state of any RESERVE ELECTRICAL POWER SOURCE.

NOTE E.g. an indication whether the output is within the manufacturer's specified range.

49.102 Pneumatic POWER SUPPLY

49.102.1 Means shall be provided to prevent unintentional operation of the "off" switch.

Compliance is checked by inspection and functional testing.

SECTION EIGHT – ACCURACY OF OPERATING DATA AND PROTECTION AGAINST HAZARDOUS OUTPUT

51 Protection against hazardous output

This clause of the General Standard applies except as follows:

Addition:

Copyright International Electrotechnical Commission
Provided by IHS under license with IEC
No reproduction or networking permitted without license from IHS Not for Resale

51.101 General

The particular requirements for the MONITORING DEVICE(S), ALARM SYSTEM(S), and PROTECTION DEVICEs apply when the ANAESTHETIC SYSTEM or individual devices are operating under normal power supply condition.

Compliance is checked by examination of the ANAESTHETIC SYSTEM, or by examination of the accompanying documents of the individual device(s).

51.101.1 Pressure limitation

The ANAESTHETIC SYSTEM shall either be equipped with a means to limit the pressure at the PATIENT connection port during both NORMAL CONDITION and SINGLE FAULT CONDITIONS to less than 12,5 kPa (125 cm H_2O) or, if not so equipped, the accompanying documents shall state that the ANAESTHETIC SYSTEM is to be equipped with a means to limit the pressure at the PATIENT connection port during both NORMAL CONDITIONS and SINGLE FAULT CONDITIONS to less than 12,5 kPa (125 cm H_2O) before being put into service. (See item aa) of 6.8.2.)

NOTE A reservoir bag complying with ISO 5362 may be considered as a pressure-limiting device for an ANAESTHETIC SYSTEM without an ANAESTHETIC VENTILATOR or when the ANAESTHETIC VENTILATOR is in the manual or spontaneous ventilation mode. The pressure limiting effect of a reservoir bag complying with ISO 5362 is a nominal value of 5,5 kPa (55 cm H_2O).

Compliance is checked by introducing a pressure rise at the PATIENT connection port of the ANAESTHETIC BREATHING SYSTEM supplied or recommended by the manufacturer and by verifying that the pressure limiting requirement is met.

51.101.2 Carbon dioxide monitoring

The ANAESTHETIC SYSTEM shall either be equipped with a capnometer complying with ISO 9918 or, if not so equipped, the accompanying documents shall state that the ANAESTHETIC SYSTEM is to be equipped with a capnometer complying with ISO 9918 before being put into service. (See item aa) of 6.8.2.)

51.101.3 Oxygen monitoring

The ANAESTHETIC SYSTEM shall either be equipped with an oxygen monitor complying with ISO 7767 or, if not so equipped, the accompanying documents shall state that the ANAESTHETIC SYSTEM is to be equipped with an oxygen monitor complying with ISO 7767 before being put into service. (See item aa) of 6.8.2.)

51.101.4 Exhaled volume monitoring

51.101.4.1 The ANAESTHETIC SYSTEM shall either be equipped with an exhaled volume monitor complying with 51.101.4.2 or, if not so equipped, the accompanying documents shall state that the ANAESTHETIC SYSTEM is to be equipped with an exhaled volume monitor complying with 51.101.4.2 before being put into service. (See item aa) of 6.8.2.)

51.101.4.2 The accuracy of the displayed value shall be ±20 % of actual reading above 100 ml tidal volume, or ±20 % of actual reading above 1 l/min minute volume. (See also 6.8.2 xx) for disclosure requirements below 100 ml tidal volume and 1 l/min minute volume.

NOTE In certain situations, for example paediatric breathing systems, measurement of exhaled volume may not accurately reflect tidal and/or minute volume. In these situations, adequacy of ventilation may be monitored more satisfactorily by other means for example, capnography.

Compliance is checked by visual and mechanical inspection and by the method given in 51.101.4.2.1.

51.101.4.2.1 *Connect the ANAESTHETIC BREATHING SYSTEM specified by the manufacturer to a test lung (see Table 101) and ventilate the test lung under the appropriate conditions*

--`,,```,,,,````-`-`,,`,,`,`,,`---

Copyright International Electrotechnical Commission
Provided by IHS under license with IEC
No reproduction or networking permitted without license from IHS Not for Resale

described in Table 101 using test gases (e.g. gas concentrations and saturation specified by the manufacturer) until measured exhaled volumes are stable.

Table 101 – Test conditions for expiratory volume tests

	Adjustable parameter				
	C	**R**	**V_T**	**F**	**I/E**
Adult	500 ± 5 %	0,5 ± 10 %	500	10	1:1,5 to 1:2,5
Paediatric	200 ± 5 %	2 ± 10 %	300	20	1:1,0 to 1:1,5
Neonatal	10 ± 5 %	5 ± 10 %	30	30	1:1,0 to 1:1,5

C = Compliance in ml/kPa

R = Resistance in kPa/l/s

V_T = Tidal volume. V_T (ml) is derived from pressure sensor on test lung (V_T = *C* multiplied by P_{max})

F = Frequency in breaths per minute

I/E = Inspiration / Expiration

NOTE The tolerances for C and R apply over the ranges of the measured parameters.

51.101.4.3 An ALARM SIGNAL of at least medium priority shall be activated if the PATIENT'S exhaled volume falls below an OPERATOR-adjustable minimum. If the medium priority signal is delayed, the delay shall not exceed 90 s. The delay may be OPERATOR-adjustable.

Compliance is checked by the method given in 51.101.4.3.1

51.101.4.3.1 *Connect the exhaled volume monitor to an ANAESTHETIC BREATHING SYSTEM according to the manufacturer's instructions. Set the adjustable alarm delay, if provided, to its maximum setting. Ventilate a test lung until the monitor readings are stable. Reduce the volume of ventilation until the exhaled volume falls below the OPERATOR-adjustable low volume alarm setting. Confirm that the medium priority signal annunciates within 90 s.*

*51.101.5 Breathing system integrity alarm

The ANAESTHETIC SYSTEM shall either be equipped with a breathing system integrity ALARM SIGNAL complying with 51.101.5.1 or, if not so equipped, the accompanying documents shall state that the ANAESTHETIC SYSTEM IS TO be equipped with a breathing system integrity ALARM SIGNAL complying with 51.101.5.1 before being put into service. (See item aa) of 6.8.2.)

NOTE 1 ALARM CONDITIONS considered to comply with the above include, but are not limited to, low positive pressure, low or zero CO_2 and low exhaled volume.

NOTE 2 MONITORING DEVICES indicate specific ALARM CONDITIONS and do not differentiate between possible causes.

51.101.5.1 *Disconnect, in turn, each OPERATOR-detachable connection of the ANAESTHETIC BREATHING SYSTEM and ANAESTHETIC VENTILATOR if present. Use the test method(s) specified by the manufacturer, and verify that the ALARM SIGNAL(S) is/are ANNUNCIATED.*

51.101.6 Continuing Pressure Alarm

The ANAESTHETIC SYSTEM shall either be equipped with a means to ANNUNCIATE a high priority ALARM SIGNAL when the pressure in the ANAESTHETIC BREATHING SYSTEM exceeds the set ALARM LIMIT(S) for continuing positive pressure longer than 15 s, or, if not so equipped, the accompanying documents shall state that the ANAESTHETIC SYSTEM is to be equipped with a means to annunciate a high priority ALARM SIGNAL when the pressure in the ANAESTHETIC BREATHING SYSTEM exceeds the set ALARM LIMIT(S) for continuing positive pressure longer than 15 s. (See item aa) of 6.8.2.)

Copyright International Electrotechnical Commission
Provided by IHS under license with IEC
No reproduction or networking permitted without license from IHS Not for Resale

51.101.7 ANAESTHETIC GAS SCAVENGING TRANSFER AND RECEIVING SYSTEM

The ANAESTHETIC SYSTEM shall either be equipped with an ANAESTHETIC GAS SCAVENGING TRANSFER and RECEIVING SYSTEM complying with ISO 8835-3 or, if not so equipped, the accompanying documents shall state that the ANAESTHETIC SYSTEM is to be equipped with an ANAESTHETIC GAS SCAVENGING TRANSFER and RECEIVING SYSTEM complying with ISO 8835-3 before being put into service. (See item aa) of 6.8.2.)

51.101.8 ANAESTHETIC SYSTEM equipped with ANAESTHETIC VAPOUR DELIVERY DEVICE

If ANAESTHETIC VAPOUR DELIVERY DEVICES are used in ANAESTHETIC SYSTEMS they shall comply with ISO 8835-4. The ANAESTHETIC SYSTEM equipped with an ANAESTHETIC VAPOUR DELIVERY DEVICE, shall either be equipped with an ANAESTHETIC AGENT MONITOR complying with ISO 11196 or, if not so equipped, the accompanying documents shall state that the ANAESTHETIC SYSTEM is to be equipped with an ANAESTHETIC AGENT MONITOR complying with ISO 11196, before being put into service. (See item cc) of 6.8.2.)

51.102 ANAESTHETIC GAS DELIVERY SYSTEM

51.102.1 Oxygen supply failure ALARM SYSTEM

The ANAESTHETIC GAS DELIVERY SYSTEM shall be provided with an oxygen supply failure ALARM SYSTEM to indicate when the oxygen supply, whether derived from a pipeline or from a cylinder, has fallen below that specified by the manufacturer. (See item bbb) of 6.8.2.)

If electronically generated, the ALARM SIGNAL shall be high priority. (See 51.103.)

If pneumatically generated, the auditory ALARM SIGNAL shall be at least 7 s in duration, and when tested as described in ISO 3746, its A-weighted sound pressure level shall be at least 2 dB above a white background sound level of 55 dB.

Pneumatically generated ALARM SIGNALS shall derive their energy from the oxygen supply source.

51.102.2 Oxygen supply failure protection

The ANAESTHETIC GAS DELIVERY SYSTEM shall be designed so that whenever the oxygen supply is reduced below the manufacturer-specified minimum and oxygen continues to flow from the common gas outlet, the delivered oxygen concentration shall not decrease below 19 % at the common gas outlet. The performance of the ANAESTHETIC GAS DELIVERY SYSTEM under these conditions shall be stated in the accompanying documents. (See also 6.8.2.)

Compliance is checked by functional testing.

*51.102.3 Protection against selection of an oxygen concentration below that of ambient air

The ANAESTHETIC GAS DELIVERY SYSTEM shall be provided with means to prevent the unintentional selection of a mixture of oxygen and nitrous oxide having an oxygen concentration below that of ambient air. If an OPERATOR-selected override mechanism is provided, its activation shall be clearly indicated.

Compliance is checked by visual inspection and functional testing.

51.103 General requirements for ALARM SYSTEMS

51.103.1 The ALARM SYSTEM shall comply with ISO 9703-1, ISO 9703-2 and ISO 9703-3 unless otherwise specified in this Particular Standard.

Copyright International Electrotechnical Commission
Provided by IHS under license with IEC
No reproduction or networking permitted without license from IHS Not for Resale

51.103.2 If an ALARM SYSTEM or any part thereof can be DISABLED by the OPERATOR, there shall be a visual indication that it has been DISABLED.

51.103.3 All auditory ALARM SIGNALS shall be capable of being SILENCED. When an auditory ALARM SIGNAL has been SILENCED, new or different ALARM CONDITIONS shall not be prevented from being ANNUNCIATED.

51.103.4 The ALARM LIMITS shall be indicated either continuously or on OPERATOR demand.

51.103.5 Automatic change of ALARM CONDITION priority shall not be to a priority lower than that specified within this Particular Standard, and shall only occur after ANNUNCIATION of the ALARM SIGNAL(S).

51.103.6 If OPERATOR-adjustable change of ALARM CONDITION priority is provided, it shall not be to a priority that is lower than that specified within this Particular Standard.

NOTE In order to prevent nuisance ALARM SIGNALS, the auditory ALARM SIGNALS should allow DISABLING by the OPERATOR when the ANAESTHETIC SYSTEM is not connected to the PATIENT.

51.104 High priority ALARM CONDITION

51.104.1 ALARM CONDITIONS of high priority shall have NON-LATCHING auditory ALARM SIGNALS. The OPERATOR shall be able to determine the cause of a high priority ALARM CONDITION after the auditory ALARM SIGNAL is no longer ANNUNCIATING. The manufacturer shall describe in the accompanying documents the methods available for the OPERATOR to determine the ALARM CONDITION.

51.104.2 The maximum time for which auditory ALARM SIGNALS can be SILENCED shall be 120 s.

51.105 Medium priority ALARM CONDITION

51.105.1 ALARM CONDITIONS of medium priority shall have NON-LATCHING auditory ALARM SIGNALS.

51.105.2 Unless otherwise stated by the manufacturer, the maximum time for which the auditory ALARM SIGNALS can be SILENCED shall be 4 min.

SECTION NINE – ABNORMAL OPERATION AND FAULT CONDITIONS ENVIRONMENTAL TESTS

52 Abnormal opertion and fault conditions

This clause of the General Standard applies except as follows:

52.1 Unintentional changing of settings

Addition:

NOTE If a MONITORING DEVICE and/or ALARM SYSTEM has an ANAESTHETIC SYSTEM control function, a SINGLE FAULT CONDITION is prevented from causing the MONITORING DEVICE /ALARM SYSTEM and the control function to become ineffective simultaneously.

Copyright International Electrotechnical Commission
Provided by IHS under license with IEC
No reproduction or networking permitted without license from IHS Not for Resale

SECTION TEN – CONSTRUCTIONAL REQUIREMENTS

54 General

This clause of the General Standard applies except as follows:

54.3 Inadvertent changing of settings

Addition:

NOTE All manually-operated controls (mechanical, pneumatic, or electrical) should be designed so as to minimize unintentional change from their set position.

Addition:

54.101 Protection against cross contamination of anaesthetic agents

Means shall be provided to prevent contamination of the contents of one ANAESTHETIC VAPOUR DELIVERY DEVICE with another volatile anaesthetic agent.

56 Components and general assembly

This clause of the General Standard applies except as follows:

56.1 General

Addition:

aa) ANAESTHETIC SYSTEMS and parts thereof shall be designed and manufactured to minimize health risks due to substances leached or leaking from the device or its components during normal use. Particular attention shall be paid to the toxicity of materials and their compatibility with substances and gases with which they enter into contact during normal use.

Evidence shall be held by the manufacturer.

57 MAINS PARTS, components and layout

This clause of the General Standard applies except as follows:

57.2 MAINS CONNECTORS, APPLIANCE INLETS and the like

Addition:

aa) The exception in 57.2 e) shall also apply to ANAESTHETIC SYSTEMS, i.e. AUXILIARY MAINS SOCKET OUTLETS on an ANAESTHETIC SYSTEM may be of a type which can accept a mains plug.

*57.3 Power supply cords

a) Application

Addition (after existing last dash):

--`,,```,,,,````-`-`,,`,,`,`,,`---

Copyright International Electrotechnical Commission
Provided by IHS under license with IEC
No reproduction or networking permitted without license from IHS Not for Resale

– The mains supply cord of an electrically powered ANAESTHETIC SYSTEM and/or its individual devices shall be a non-detachable cord or shall be protected against accidental disconnection.

Compliance is checked by inspection and, for EQUIPMENT provided with an APPLIANCE COUPLER, by subjecting the detachable cord for 1 min to an axial pull of force as shown in Table 102. During the test the mains connector shall not become disconnected from the APPLIANCE INLET, and the EQUIPMENT shall continue to function normally.

Table 102 – Force of axial pulls

Mass of equipment kg	**Pull** N
Up to and including 1	30
Over 1 up to and including 4	60
Over 4	100

*57.6 Mains fuses and over-current releases

Addition:

The ANAESTHETIC SYSTEM and each AUXILIARY MAINS SOCKET OUTLET which can accept a standard mains plug shall be provided with separate fuses or over-current releases as required for a single piece of EQUIPMENT in 57.6 of the General Standard.

These fuses or OVERCURRENT RELEASES shall be designed such that the ANAESTHETIC SYSTEM including the AUXILIARY MAINS SOCKET OUTLETS shall maintain normal function with each AUXILIARY MAINS SOCKET OUTLET loaded to the maximum rating.

If any AUXILIARY MAINS SOCKET OUTLET is overloaded by a factor of 7,5 ± 2,5, all remaining AUXILIARY MAINS SOCKET OUTLETS and the ANAESTHETIC SYSTEM shall maintain normal function.

Compliance is checked by visual inspection and functional testing.

SECTION 101 – ADDITIONAL CLAUSES SPECIFIC TO ANAESTHETIC GAS DELIVERY SYSTEMS

101 Medical gas supply

101.1 The ANAESTHETIC GAS DELIVERY SYSTEM shall be equipped with means of connection to a reserve oxygen supply.

101.2 Connections for medical gas cylinders shall comply with ISO 407 or ISO 5145.

101.3 Each medical gas supply inlet connection shall be equipped with a means to prevent particles greater than 100 μm from entering the device. The location at which the pressure is monitored shall be downstream of the filter.

102 Medical gas pipeline inlet connections

102.1 Pipeline inlet connectors for the ANAESTHETIC GAS DELIVERY SYSTEM shall be the body fittings as specified in ISO 5359.

Copyright International Electrotechnical Commission
Provided by IHS under license with IEC
No reproduction or networking permitted without license from IHS Not for Resale

102.2 The ANAESTHETIC GAS DELIVERY SYSTEM shall be equipped with means to limit reverse gas flow between gas input ports of the same gas to 100 ml/min (169 Pa × l/s) under NORMAL CONDITIONS.

The ANAESTHETIC GAS DELIVERY SYSTEM shall be equipped with means to limit the flow of gas from one input port to an input port of a different gas to less than 10 ml/h (0,281 Pa × l/s) under NORMAL CONDITIONS.

If under SINGLE FAULT CONDITION the flow of gases between input ports of different gases can exceed 10 ml/h (0,281 Pa × l/s), the ANAESTHETIC GAS DELIVERY SYSTEM shall be equipped with means to indicate a SAFETY HAZARD, for example, by means of an ALARM SIGNAL.

Evidence of compliance with these requirements, either by test or by other methods, shall be provided by the manufacturer where appropriate.

103 Medical gas supply pressure monitoring

103.1 The ANAESTHETIC GAS DELIVERY SYSTEM shall be equipped with a means to monitor the pressure or content of each gas supplied at cylinder pressure. The ANAESTHETIC GAS DELIVERY SYSTEM shall be capable of displaying the pressure or cylinder contents continuously. This display shall be visible from the front of the ANAESTHETIC GAS DELIVERY SYSTEM.

NOTE 1 The cylinder pressure or cylinder content may be displayed continuously or on OPERATOR demand.

NOTE 2 In a cylinder with liquefied gas, cylinder pressure will not reflect cylinder contents.

103.2 The ANAESTHETIC GAS DELIVERY SYSTEM shall be equipped with a means to monitor continuously the pressure of each gas supplied by a medical gas pipeline system.

The ANAESTHETIC GAS DELIVERY SYSTEM shall be capable of indicating continuously the pressure status. This indication shall be visible from the front of the ANAESTHETIC GAS DELIVERY SYSTEM

NOTE The medical gas pipeline system pressure status indication may be displayed continuously or on OPERATOR demand.

103.3 The maximum error of the means of pressure monitoring shall not exceed ±(4 % of the full scale reading + 8 % of the actual reading).

Evidence of compliance with these requirements, either by testing or by other methods, shall be available upon request.

104 Medical gas supply PRESSURE REGULATORS

PRESSURE REGULATOR(S) integral to the ANAESTHETIC GAS DELIVERY SYSTEM intended for use at inlet pressures ≥1400 kPa shall comply with 5.1 (Materials), 5.2 (Cleanliness), 7.3 (Pressure relief valve), 7.5 (Resistance to ignition), and 7.9 (Mechanical resistance) of ISO 10524.

105 Anaesthetic gas delivery system piping

105.1 Except for the venting of air or oxygen from fluidic or pneumatic elements, the gas leakage from

aaa) that part of the ANAESTHETIC GAS DELIVERY SYSTEM PIPING up to the inlet of the flow control system, and

bbb) the piping between the inlet connections for cylinders and PRESSURE REGULATORS

Copyright International Electrotechnical Commission
Provided by IHS under license with IEC
No reproduction or networking permitted without license from IHS Not for Resale

shall not exceed 75 ml/min (corrected to 20 °C) when it is pressurized to maximum and minimum design pressure. This test shall be repeated for each individual gas.

Compliance is checked by testing each individual gas in turn whilst all other gas inlet connections are open to atmosphere

NOTE This requirement allows 25 ml/min leak for the cylinder attachment, 25 ml/min leak for the regulator assembly and 25 ml/min for ANAESTHETIC GAS DELIVERY SYSTEM PIPING.

105.2 The gas leakage to atmosphere between the outlet of the flow control system and/or GAS MIXER and the FRESH GAS OUTLET shall not exceed 50 ml/min at a pressure of 3 kPa.

This requirement shall be met with the ANAESTHETIC VAPOUR DELIVERY DEVICE recommended by the manufacturer

– on,
– off, or
– removed, if it is OPERATOR-detachable.

NOTE Many flow control systems allow a continuous basal flow of oxygen. This should not be confused with leakage to atmosphere.

Compliance is checked by leakage measurement at (20 ± 3) °C.

105.3 There shall be no hazard for PATIENT(s), OPERATOR(s), or third persons arising if the ANAESTHETIC GAS DELIVERY SYSTEM PIPING is subjected to the pressure which may occur during any SINGLE FAULT CONDITION.

Evidence of compliance with requirements either by testing or by other methods shall be provided by the manufacturer where appropriate.

106 Gas flow metering

106.1 Each flowmeter and/or flow control system shall be calibrated for discharge into an ambient atmosphere of 101,3 kPa at an operating temperature of (20 ± 3) °C.

All flowmeters and flow control systems shall be graduated in litres per minute.

For flows of 1 l/min or below, the flow shall be expressed either in millilitres per minute or in decimal fractions of a litre per minute (with a zero before the decimal marker). The method of graduation shall be consistent on any one ANAESTHETIC GAS DELIVERY SYSTEM.

106.2 The accuracy of the graduations of any flowmeter or flow control system used in the ANAESTHETIC GAS DELIVERY SYSTEM shall be within ±10 % of the indicated value for flows between 10 % and 100 % of full scale when discharged into an ambient atmosphere of 101,3 kPa at an operating temperature of (20 ± 3) °C.

106.3 If there is a separate flow adjustment control for each gas they shall meet the following requirements:

– there shall not be more than one flow adjustment control for any single gas delivered to the FRESH GAS OUTLET under NORMAL CONDITIONS;
– for rotary style flow controls the oxygen knob shall have a physical profile in accordance with Figure 101 and shall have a diameter not less than any of the diameters of the knobs controlling all other gases;
– all rotary style flow adjustment knobs for gases other than oxygen, shall be round, and their surface serration shall not exceed a depth of 1 mm;

Copyright International Electrotechnical Commission
Provided by IHS under license with IEC
No reproduction or networking permitted without license from IHS Not for Resale

– for rotary adjustment controls a counter clockwise rotation shall cause an increase in flow and conversely, a clockwise rotation shall cause a decrease in flow;

– the stem of each rotary flow adjustment control shall be captive so that it cannot be disengaged from its housing without the use of tools.

NOTE 1 Attention is drawn to the fact that the requirement in this clause may be contrary to the convention for direction of rotation for electronic controls.

NOTE 2 Devices to prevent delivery of oxygen percentage below that of ambient air are not considered to be flow adjustment controls.

NOTE 3 An ANAESTHETIC SYSTEM may incorporate an emergency oxygen flow adjustment control in addition to the normal oxygen flow adjustment control or GAS MIXER. Such an emergency oxygen flow adjustment control is designed for emergency use only, e.g. failure of an electronic controlled GAS MIXER or flow controller.

106.4 If the gas flow control system includes provision for carbon dioxide the flow of carbon dioxide shall be limited to a maximum of 600 ml/min.

106.5 If a bank of flowmeters is fitted, the oxygen flowmeter shall be placed at one extremity.

Compliance is checked by inspection.

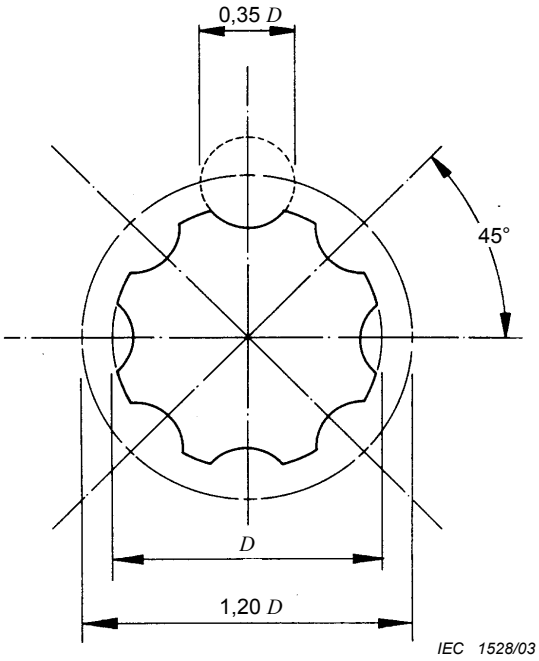

Figure 101 – Profile of oxygen flow control knob for applications other than anaesthetic vapour delivery device flow control (See 106.3)

107 Gas mixer

107.1 The gas mixture control scale shall indicate:

a) the set concentration of oxygen % (V/V) in the delivered gas; and

b) the minimum and maximum concentration marks.

The range of oxygen concentrations shall be indicated either continuously, or on OPERATOR demand.

Copyright International Electrotechnical Commission
Provided by IHS under license with IEC
No reproduction or networking permitted without license from IHS Not for Resale

107.2 At any flow and pressure given in the instructions for use, the oxygen concentration shall be within ±5 % (V/V) of the set or indicated value. (See item ccc) of 6.8.2.)

NOTE See also 51.102.2 and 51.102.3

108 Oxygen flush

108.1 The ANAESTHETIC GAS DELIVERY SYSTEM shall be equipped with a means to allow the OPERATOR to supply 100 % oxygen at a steady flow of between 25 l/min and 75 l/min directly to the FRESH GAS OUTLET or inlet of the ANAESTHETIC BREATHING SYSTEM.

108.2 Means shall not be provided to supply any gas other than oxygen directly to the FRESH GAS OUTLET or to the inlet of the ANESTHETIC BREATHING SYSTEM.

108.3 The oxygen flush shall have only one “Off” position.

NOTE The oxygen flush should be designed and positioned to minimize unintentional operation by EQUIPMENT or personnel pressing against it.

108.4 The oxygen flush shall be operable with one hand and shall be self-closing.

Compliance is checked by functional testing.

109 Fresh gas outlet

If an OPERATOR-accessible FRESH GAS OUTLET is provided, there shall be not more than one, it shall be visible from the OPERATOR’S position, and shall be a coaxial 22 mm/15 mm conical connector complying with ISO 5356-1, or 5356-2.

NOTE An OPERATOR-accessible FRESH GAS OUTLET should have a means to prevent unintentional disconnection from the ANAESTHETIC BREATHING SYSTEM.

110 Checklist

Each ANAESTHETIC SYSTEM shall be provided with a checklist(s) of the procedures recommended by the manufacturer to be performed prior to each use of the ANESTHETIC SYSTEM.

NOTE 1 These procedures may be performed automatically, in whole or in part, or by the OPERATOR.

NOTE 2 Attention is drawn to additional checklists established by regional or national medical associations, or government agencies.

NOTE 3 The use of electronic displays integral to, or provided with the ANAESTHETIC SYSTEM or the device/system to provide such a checklist is permitted.

Copyright International Electrotechnical Commission
Provided by IHS under license with IEC
No reproduction or networking permitted without license from IHS Not for Resale

Annex AA
(informative)

Guidance and rationale for particular clauses and subclauses in this particular standard

NOTE The clause numbers in this annex refer to the clauses in this Particular Standard to which the rationales apply.

6.1 j) The marking of the ANAESTHETIC SYSTEM input and the sum of the input in amperes gives information to the USER and OPERATOR on the minimum mains fuses ratings needed in different situations. This information is needed to prevent current overload and electrical failure of the EQUIPMENT in critical situations.

6.1 k) The marking of each AUXILIARY MAINS SOCKET OUTLET with its output in amperes gives information to USERS and OPERATORS on the current ratings of the fuses of each AUXILIARY MAINS SOCKET OUTLET. This information is needed to prevent current overload and electrical failure of the EQUIPMENT in critical situations.

6.8.2 ii) It is very important that the USER and OPERATOR of an ANAESTHETIC SYSTEM not specified as category APG are made aware that an explosion hazard exists when FLAMMABLE ANAESTHETIC AGENTS are used.

It is also important to inform the OPERATOR as to which anaesthetic agents are suitable for use in an ANAESTHETIC SYSTEM not specified as APG.

Anaesthetic agents do not fall readily into flammable and non-flammable categories. The possibility of ignition depends not only on the agent in use, its concentration and other simultaneously used gases but also on the electrical energy, power and surface temperature that may be available to cause ignition.

Halothane, though generally regarded as safe, will form flammable mixtures with oxygen and nitrous oxide when tested with very high ignition energy. It is therefore necessary to specify a lower ignition level of the agents under which the APG requirements on equipment are applicable and above which less restrictive requirements apply. Currently used anaesthetic agents such as halothane belong to the category above this level and may therefore, according to this Particular Standard, be used in ANAESTHETIC SYSTEMS not marked as APG or AP.

Ignition tests on the most ignitable mixture of the anaesthetic agent with oxygen and/or nitrous oxide have been recommended in Annex DD. The reason for using the most ignitable concentration and not clinically used concentrations is that this method is common and recognised when determining the flammability level of gas mixtures and when comparing this level with the flammability of other gas mixtures. The most ignitable concentration is also a well-defined concentration which can be determined by test institutions specialized in such tests.

10.2.101 The requirement in the last paragraph of this clause is intended to help ensure that the ANAESTHETIC SYSTEM will not overburden the medical gas pipeline resulting in transient medical gas pipeline and/or device ALARM SIGNALS. ANAESTHETIC VENTILATORS are being designed with increased volume delivery capabilities and different ventilation modes which often require high flows from the medical gas pipeline. The committee believes that the requirement in this clause for the ANAESTHETIC SYSTEM not to require more than 60 l/min time weighted average (TWA) flow with the pressure at the gas inlet at 280 kPa should help avoid mismatching equipment with the medical gas pipeline capabilities. The TWA flow is calculated by recording the actual flowrate at several points over a 10 s span of time. The following is an example of the formula that may be used.

Copyright International Electrotechnical Commission
Provided by IHS under license with IEC
No reproduction or networking permitted without license from IHS Not for Resale

$$TWA = \frac{F_1T + F_2T + F_3T + F_nT}{TT}$$

where

F = measured flow (l/min)

The subscripts$(_{1)2),\ n}$) = individual samples (e.g first, second, third through the last or $_n$th)

T = time between measurements

TT = total Time

The following is a hypothetical example of the above formula.

T = 2,5 s

F_1 = 20 l/min

F_2 = 120 l/min

F_3 = 60 l/min

F_4 = 20 l/min

TT = 10 s

In the above example, the formula works out as

$F_1(20) \times$ T (2,5) = 50l/min

$F_2(120) \times$ T (2,5) = 300 l/min

$F_3(60) \times$ T (2,5) = 150 l/min

$F_4(20) \times$ T (2,5) = 50l/min

50 + 300 + 150 + 50 = 550 l/min

550 l/min divided by TT (10 s) = 55,00 l/min

TWA flow = 55,00 l/min.

43 Reports of fire caused by medical devices are unusual. However, when such fires occur in the hospital environment they can have tragic consequences.

The risk of a fire is fundamentally determined by the three elements necessary in order to start a fire:

– ignitable material (fuel);
– temperature equal to or above the minimum ignition temperature of the material, or sparks with energy dissipation equal to or above the minimum ignition energy of the materials;
– an oxidant.

Therefore, following the basic safety concepts of the General Standard, the objective in the design of the equipment must be to ensure that under both NORMAL and SINGLE FAULT CONDITIONS and under the oxidizing conditions to which the material may be exposed, the temperature of any material is not raised to its minimum ignition temperature or the spark energy does not exceed the material ignition energy level. Alternatively, contained ignition may occur provided it is self-limiting so that no hazard is created, for example, a fuse or a resistor within a sealed compartment.

--`,,```,,,,````-`-`,,`,,`,`,,`---

Copyright International Electrotechnical Commission
Provided by IHS under license with IEC
No reproduction or networking permitted without license from IHS Not for Resale

Minimum ignition temperatures for a large number of specific materials are well established in published literature, although usually only for ambient air and pure oxygen environments. The minimum ignition temperature may be critically dependent upon the concentration of oxidant present. If ignition temperatures for other materials or different oxygen concentrations are required these may be determined using the methods and apparatus described in IEC 60079-4.

In considering the ignitable materials particular attention should be paid to materials which may accumulate during prolonged use, for example, airborne particles of paper or cotton.

The risk of fire directly caused by sparking of electrical circuits is generally considered insignificant in medical equipment as the temperature rise resulting from the power dissipation caused by a spark will not normally reach the ignition temperature of the solid materials generally used when following good design practice.

However, if materials with a low ignition temperature and a very low thermal capacity; for example, cotton wool, paper or organic fibre accumulations, are present then it may not be possible to determine the surface temperatures attained during exposure to spark energy and specific tests, such as, ignition tests, may be necessary to assume safety under these conditions.

In certain standards currently in use the requirement to minimise fire risk is based on the limitation of temperature, electrical energy and oxidant concentration to absolute values.

The temperature value is based on the minimum hotplate ignition temperature for fire retardant cotton in 100 % oxygen which is given in the American NFPA publication 53M [1][3] as 310 °C. The assumption was therefore made that 300 °C was an acceptable temperature limit in medical equipment with oxygen enriched atmospheres.

The origin of the electrical energy values which have been used is less clear, and it would seem that in the absence of specific controlled tests, figures have been adopted from other published standards. However, simple tests and detailed analysis of the known factors involved in causing an oxygen fire show that these figures can be either over restrictive or potentially hazardous depending, in particular, on the manner in which the power may be dissipated and on the proximity and type of any "fuel" present.

It is now generally accepted that there are no single or universally applicable ranges of temperatures, energy and concentration of oxidant which can ensure safety under all circumstances. Ultimately, electrical energy is only significant in respect of its ability to raise the temperature of ignitable materials and this in turn depends upon the particular configuration and the proximity of any ignitable materials.

Under single fault conditions in a typical electrical circuit the possible number of failure modes is very high. In this case full assurance of safety may only be possible by the use of appropriate hazard and safety analysis procedures, taking into consideration the three basic elements, i.e. material, temperature and oxidant.

An appropriate design might limit the electrical energy in the circuit to ensure that temperatures remain below the minimum air ignition temperature under normal conditions and seal compartments or add forced ventilation to ensure that the oxygen content does not exceed that of ambient air under a single fault condition.

Alternatively, it may be appropriate to limit the electrical energy to ensure temperatures below the minimum ignition temperature for a pure oxygen environment, even under a single fault condition. The particular combination of material, oxidant and temperature determines whether a fire will occur, not the single value of any one of these variables.

---

3) Figures in square brackets refer to the bibliography.

--`,,```,,,,````-`-`,,`,,`,`,,`---

Copyright International Electrotechnical Commission
Provided by IHS under license with IEC
No reproduction or networking permitted without license from IHS Not for Resale

51.101.5 The committee generally agreed that currently there is no way to indicate reliably the failure of breathing system integrity (for example, partial or even complete disconnection of the breathing system). Under certain circumstances, the monitoring of abnormal or low values of CO_2, pressure, exhaled volume, concentration of vapour or oxygen may individually or in combination indicate or contribute to the detection of loss of breathing system integrity. It is for these reasons that a medium priority alarm has been provided for the monitors mentioned.

51.102.3 There is frequently more than one member of an anaesthesia team assigned to the care of one PATIENT in the operating room. Often members of a care team may be relieved (for example, prolonged procedures, bathroom breaks, etc.) during a case. Also, the ANAESTHETIC SYSTEM may be left in a "standby" condition when one case has finished, and another is to follow. In these circumstances, a "new" OPERATOR must be made aware that an ALARM SIGNAL had been previously disabled.

57.3 a) Accidental disconnection could be hazardous for the patient, because of hypo-ventilation or low inspired oxygen, etc.

57.6 A short circuit of other equipment connected to the auxiliary mains socket outlet must not affect the normal function of the life support function of the ANAESTHETIC SYSTEM.

Annex DD Anaesthetic agents are not readily categorized into flammable and non-flammable. Whether or not an anaesthetic agent ignites depends not only on the agent used, its concentration and other gases used simultaneously, it also depends on the electrical energy and surface temperature available which may promote ignition.

Halothane, though generally regarded as safe, will form flammable mixtures with oxygen and nitrous oxide when tested with very high ignition energy. It is therefore necessary to specify a lower ignition level of the agents under which the APG requirements on equipment are applicable and above which less restrictive requirements apply. Currently used anaesthetic agents, such as halothane, belong to a category above this level and may therefore, according to this part of the International Standard, be used in anaesthetic workstations not marked as APG or AP.

Ignition tests performed on the most ignitable of the anaesthetic agents mixed with oxygen and/or nitrous oxide have been recommended in Annex DD. The reason for using the most ignitable concentration, and not those concentrations clinically used, is due to the fact that this method is common practice and recognised as the best method for determining the flammability level of gas mixtures, especially when comparing this level with the flammability of other gas mixtures. The most ignitable concentration is also a well-defined concentration which can be determined technically in testing laboratories specialised in such testing.

Copyright International Electrotechnical Commission
Provided by IHS under license with IEC
No reproduction or networking permitted without license from IHS Not for Resale

Annex BB
(informative)

MONITORING DEVICES, ALARM SYSTEM(S) and PROTECTION DEVICES

Table BB.1 – Summary of the relationship of MONITORING DEVICES, ALARM SYSTEM(S) and PROTECTION DEVICES with regard to delivery devices

Delivery device	ALARM SYSTEM(S)	MONITORING DEVICE(S)	PROTECTION DEVICE(S)
Electric POWER SUPPLY:			
a) Mains POWER SUPPLY	49.101.2	N/A	49.101.1
b) Internal POWER SUPPLY	49.101.2	49.101.3	N/A
Pneumatic POWER SUPPLY:			
a) Cylinder pressure	N/A	103.1	N/A
b) Pipeline pressure	N/A	103.2	N/A
ANAESTHETIC GAS DELIVERY SYSTEM:			
a) Oxygen (supply failure)	51.102.1	103.1 & 103.2	51.102.2
b) Air (supply failure)	N/A	103.1 & 103.2	N/A
c) Nitrous oxide			
(supply failure)	N/A	103.1 & 103.2	N/A
(hypoxic mixture)	N/A	N/A	51.102.2 & 51.102.3
d) Pressure limitation	N/A	N/A	51.101.1
e) CO_2 concentration	ISO 9918	51.101.2	N/A
f) Oxygen concentration	ISO 7767	51.101.3	N/A
g) Exhaled volume	51.101.4	51.101.4	N/A
h) Breathing system integrity	51.101.5	N/A	N/A
i) Continuing pressure	51.101.6	N/A	N/A
j) Anaesthetic gas scavenging	N/A	N/A	ISO 8835-3
ANAESTHETIC BREATHING SYSTEM	N/A	N/A	ISO 8835-2
ANAESTHETIC VAPOUR DELIVERY DEVICE	51.101.8	51.101.8	ISO 8835-4
ANAESTHETIC VENTILATOR	ISO 8835-5	ISO 8835-5	ISO 8835-5
N/A = Not applicable			

--`,,```,,,,````-`-`,,`,,`,`,,`---

Copyright International Electrotechnical Commission
Provided by IHS under license with IEC
No reproduction or networking permitted without license from IHS Not for Resale

Annex CC
(informative)

Separate devices of an ANAESTHETIC SYSTEM

Table CC.1 – Applicable requirement clauses for separate devices of an ANAESTHETIC SYSTEM

Device	Applicable Clauses
All devices	6.1 aa)
Auxiliary mains socket outlets	6.1 j)
Medical gas pipeline inlet connections	6.1 aa) 5)
Medical gas supply pressure monitoring	6.3 aa)
Medical gas supply pressure regulators	104
ANAESTHETIC GAS DELIVERY SYSTEM	6.8.2 aaa) through 6.8.2 ccc),
ANAESTHETIC GAS DELIVERY SYSTEM PIPING	105
Gas flow metering	6.3 cc), 6.3 dd)
ANAESTHETIC VAPOUR DELIVERY DEVICE-All	6.8.2 cc),
Oxygen flush	6.3 ee),
FRESH GAS OUTLET	6.1 bb)
Checklist	110
ANAESTHETIC VENTILATOR	6.8.2 dd),
ANAESTHETIC BREATHING SYSTEMS	6.8.2 bb),
ANAESTHETIC GAS SCAVENGING SYSTEMS	51.101.7
Suction equipment	Not mentioned
PROTECTION DEVICES	
Mains POWER SUPPLY	49.101
RESERVE ELECTRICAL POWER SUPPLY	6.8.2 vv)
O_2 supply failure	6.8.2 bbb), 51.102.3
Hypoxic mixture prevention	51.102.2
ANAESTHETIC BREATHING SYSTEM pressure limitation	51.101.1
Monitoring and alarm devices	
Mains POWER SUPPLY	49.102
RESERVE ELECTRICAL POWER SUPPLY	49.103
Cylinder pressure	103.1
Pipeline pressure	103.2
O_2 supply failure	51.102.1
All other gases (supply)	103.1 and 103.2
ANAESTHETIC VAPOUR DELIVERY DEVICES	51.101.8
ANAESTHETIC VENTILATOR	6.8.2 ee)
ANAESTHETIC BREATHING SYSTEM PRESSURE	51.101.6
Exhaled volume	51.101.4
Breathing system integrity	51.101.5

Copyright International Electrotechnical Commission
Provided by IHS under license with IEC
No reproduction or networking permitted without license from IHS Not for Resale

Table CC.1 – (*continued*)

Device	**Applicable Clauses**
Oxygen concentration	51.101.3
Carbon dioxide concentration	51.101.2

--`,,```,,,,````-`-`,,`,,`,`,,`---

Copyright International Electrotechnical Commission
Provided by IHS under license with IEC
No reproduction or networking permitted without license from IHS Not for Resale

*Annex DD
(normative)

Test for flammability of anaesthetic agent

DD.1 General

The following tests can be used to determine whether anaesthetic agents shall be regarded as non-flammable.

NOTE Cyclopropane and diethyl-ether are known to be flammable agents. Halothane, desflurane, sevoflurane, enflurane, and isoflurane have been found to be non flammable agents.

DD.2 Spark ignition tests

Spark ignition tests shall be carried out with the most ignitable concentration of the anaesthetic agent mixed with the gases oxygen and/or nitrous oxide in which the anaesthetic agent is more ignitable using the test apparatus described in Annex F of IEC 60601-1, and in IEC 60079-11.

With an ignition probability of less than 10^{-3}, ignition shall not occur:

– in a resistive circuit at a d.c. voltage of 20 V with a current of 1,0 A and at a d.c. voltage of 100 V with a current of 0,15 A;

– in an inductive circuit at a d.c. current of 200 mA with an inductance of 10 mH and at a d.c. current of 60 mA with an inductance of 1 000 mH;

– in a capacitive circuit at a d.c. voltage of 100 V with a capacitance of 1 μF and at a d.c. voltage of 20 V with a capacitance of 20 μF.

The measuring circuits are illustrated in Figures 29 and 31 of the General Standard.

DD.3 Surface temperature ignition tests

Determination of the ignition temperature shall be carried out with apparatus and procedures based on IEC 60079-4, with the following additional requirements:

– fill the test vessel with a mixture of oxygen and nitrous oxide in different proportions in successive tests, and

– cover the vessel with a lid which prevents diffusion but lifts easily if an explosion occurs.

The ignition temperature shall not be less than 300 °C.

Copyright International Electrotechnical Commission
Provided by IHS under license with IEC
No reproduction or networking permitted without license from IHS Not for Resale

Annex EE
(informative)

Clauses of this International Standard addressing the essential requirements or other provisions of EU directives

The following clauses of this standard (see Table EE.1) are likely to support requirements of EU directives. Compliance with the clauses of this standard provides one means of conforming to the specific essential requirements of the EU Medical Devices Directive [2].

Since this International Standard applies in conjunction with IEC 60601-1:1988, the table shows all applicable clauses from both IEC 60601-1 and this international Standard.

Table EE.1 – Correspondence between this International Standard and EEC Directive 93/42/EEC

Clauses of this International Standard	Where located	Corresponding paragraph of EEC Directive 93/42/EEC
1	IEC 60601-1 & this International Standard	Not applicable
2	IEC 60601-1 & this International Standard	Not applicable
3	IEC 60601-1	1 through 6 as applicable
3.6 aa)	This Standard only	1 through 6 as applicable
4	IEC 60601-1	1 through 6 as applicable
4.101	This Standard only	1 through 6 as applicable
5	IEC 60601-1	1 through 6 as applicable
6	IEC 60601-1	1 through 6 as applicable , 13.1 through 13.5 as applicable
6.1 j)	This Standard only	1 through 6 as applicable , 13.1 through 13.5 as applicable
6.1 k)	This Standard only	1 through 6 as applicable , 13.1 through 13.5 as applicable
6.1 aa)	This Standard only	1 through 6 as applicable , 13.1 through 13.5 as applicable
6.1 bb)	This Standard only	1 through 6 as applicable , 13.1 through 13.5 as applicable
6.2	IEC 60601-1	1 through 6 as applicable , 13.1 through 13.5 as applicable
6.3	IEC 60601-1	1 through 6 as applicable , 10.2, 10.3, 13.1 through 13.5 as applicable
6.3 aa)	This Standard only	1 through 6 as applicable, 10.2, 10.3, 12.9, 13.1 through 13.5 as applicable
6.3 bb)	This Standard only	1 through 6 as applicable, 10.2, 13.1 through 13.5 as applicable
6.3 cc)	This Standard only	1 through 6 as applicable, 10.2, 10.3, 12.8.1, 12.9, 13.1 through 13.5 as applicable
6.4	IEC 60601-1	1 through 6 as applicable, 10.2, 13.1 through 13.5 as applicable
6.5	IEC 60601-1	1 through 6 as applicable, 10.2, 13.1 through 13.5 as applicable

Copyright International Electrotechnical Commission
Provided by IHS under license with IEC
No reproduction or networking permitted without license from IHS Not for Resale

Table EE.1 – (*continued*)

Clauses of this International Standard	Where located	Corresponding paragraph of EEC Directive 93/42/EEC
6.6	IEC 60601-1	1 through 6 as applicable, 10.2, 13.1 through 13.5 as applicable
6.7	IEC 60601-1	1 through 6 as applicable, 10.2, 13.1 through 13.5 as applicable
6.8.1	IEC 60601-1	1 through 6 as applicable, 13.1 through 13.5 as applicable, applicable parts of 13.6
6.8.2	IEC 60601-1	1 through 6 as applicable, 13.1 through 13.5 as applicable, applicable parts of 13.6
6.8.2 aa)	This Standard only	1 through 6 as applicable, 13.1 through 13.5 as applicable, applicable parts of 13.6
6.8.2 bb)	This Standard only	1 through 6 as applicable, 13.1 through 13.5 as applicable, applicable parts of 13.6
6.8.2 cc)	This Standard only	1 through 6 as applicable, 13.1 through 13.5 as applicable, applicable parts of 13.6
6.8.2 dd)	This Standard only	1 through 6 as applicable, 13.1 through 13.5 as applicable, applicable parts of 13.6
6.8.2 ee)	This Standard only	1 through 6 as applicable, 13.1 through 13.5 as applicable, applicable parts of 13.6
6.8.2 ff)	This Standard only	1 through 6 as applicable, 13.1 through 13.5 as applicable, applicable parts of 13.6
6.8.2 gg)	This Standard only	1 through 6 as applicable, 13.1 through 13.5 as applicable, applicable parts of 13.6
6.8.2 hh)	This Standard only	1 through 6 as applicable, 13.1 through 13.5 as applicable, applicable parts of 13.6
6.8.2 ii)	This Standard only	1 through 6 as applicable, 13.1 through 13.5 as applicable, applicable parts of 13.6
6.8.2 jj)	This Standard only	1 through 6 as applicable, 13.1 through 13.5 as applicable, applicable parts of 13.6
6.8.2 kk)	This Standard only	1 through 6 as applicable, 13.1 through 13.5 as applicable, applicable parts of 13.6
6.8.2 ll)	This Standard only	1 through 6 as applicable, 13.1 through 13.5 as applicable, applicable parts of 13.6
6.8.2 mm)	This Standard only	1 through 6 as applicable, 13.1 through 13.5 as applicable, applicable parts of 13.6
6.8.2 nn)	This Standard only	1 through 6 as applicable, 13.1 through 13.5 as applicable, applicable parts of 13.6
6.8.2 oo)	This Standard only	1 through 6 as applicable, 13.1 through 13.5 as applicable, applicable parts of 13.6
6.8.2 pp)	This Standard only	1 through 6 as applicable, 13.1 through 13.5 as applicable, applicable parts of 13.6
6.8.2 qq)	This Standard only	1 through 6 as applicable, 13.1 through 13.5 as applicable, applicable parts of 13.6
6.8.2 rr)	This Standard only	1 through 6 as applicable, 13.1 through 13.5 as applicable, applicable parts of 13.6
6.8.2 ss)	This Standard only	1 through 6 as applicable, 13.1 through 13.5 as applicable, applicable parts of 13.6
6.8.2 tt)	This Standard only	1 through 6 as applicable, 13.1 through 13.5 as applicable, applicable parts of 13.6
6.8.2 uu)	This Standard only	1 through 6 as applicable, 13.1 through 13.5 as applicable, applicable parts of 13.6
6.8.2 vv)	This Standard only	1 through 6 as applicable, 13.1 through 13.5 as applicable, applicable parts of 13.6

Copyright International Electrotechnical Commission
Provided by IHS under license with IEC
No reproduction or networking permitted without license from IHS Not for Resale

Table EE.1 – (*continued*)

Clauses of this International Standard	Where located	Corresponding paragraph of EEC Directive 93/42/EEC
6.8.2 ww)	This Standard only	1 through 6 as applicable, 13.1 through 13.5 as applicable, applicable parts of 13.6
6.8.2 xx)	This Standard only	1 through 6 as applicable, 13.1 through 13.5 as applicable, applicable parts of 13.6
6.8.2 yy)	This Standard only	1 through 6 as applicable, 13.1 through 13.5 as applicable, applicable parts of 13.6
6.8.2 zz)	This Standard only	1 through 6 as applicable, 13.1 through 13.5 as applicable, applicable parts of 13.6
6.8.2 aaa)	This Standard only	1 through 6 as applicable, 13.1 through 13.5 as applicable, applicable parts of 13.6
6.8.2 bbb)	This Standard only	1 through 6 as applicable, 13.1 through 13.5 as applicable, applicable parts of 13.6
6.8.2 ccc)	This Standard only	1 through 6 as applicable, 13.1 through 13.5 as applicable, applicable parts of 13.6
6.8.3	IEC 60601-1	1 through 6 as applicable, 13.1 through 13.5 as applicable, applicable parts of 13.6
6.8.3 aa)	This Standard only	1 through 6 as applicable, 13.1 through 13.5 as applicable, applicable parts of 13.6
7	IEC 60601-1	1 through 6 as applicable
8	IEC 60601-1	1 through 6 as applicable
9	IEC 60601-1	1 through 6 as applicable
10	IEC 60601-1	1 through 6 as applicable, 7.2, 9.2 2nd dash, 13.1 through 13.5 as applicable, applicable parts of 13.6
10.2.1	This Standard only	1 through 6 as applicable
10.2.101	This Standard only	1 through 6 as applicable
13	IEC 60601-1	1 through 6 as applicable, 9.2 2nd dash, 12.6
14	IEC 60601-1	1 through 6 as applicable, 9.2 2nd dash, 12.6
15	IEC 60601-1	1 through 6 as applicable, 9.2 2nd dash, 12.6
16	IEC 60601-1	1 through 6 as applicable, 9.2 2nd dash, 12.6
17	IEC 60601-1	1 through 6 as applicable, 9.2 2nd dash, 12.6
18	IEC 60601-1	1 through 6 as applicable, 9.2 2nd dash, 12.6
19	IEC 60601-1	1 through 6 as applicable, 9.2 2nd dash, 12.6
20	IEC 60601-1	1 through 6 as applicable, 9.2 2nd dash, 12.6
21	IEC 60601-1	1 through 6 as applicable, 9.2 1st dash, 12.7.1
22	IEC 60601-1	1 through 6 as applicable, 9.2 1st dash, 12.7.1
23	IEC 60601-1	1 through 6 as applicable, 9.2 1st dash, 12.7.1
24	IEC 60601-1	1 through 6 as applicable, 9.2 1st dash, 12.7.1
25	IEC 60601-1	1 through 6 as applicable, 9.2 1st dash, 12.7.1
26	IEC 60601-1	1 through 6 as applicable, 9.2 1st dash, 12.7.1
27	IEC 60601-1	1 through 6 as applicable, 9.2 1st dash, 12.7.1
28	IEC 60601-1	1 through 6 as applicable, 9.2. 1st dash, 12.7.1
29	IEC 60601-1	1 through 6 as applicable, 9.2 2nd dash, 11 as applicable
30	IEC 60601-1	1 through 6 as applicable, 9.2 2nd dash, 11 as applicable

--`,,```,,,,````-`-`,,`,,`,`,,`---

Copyright International Electrotechnical Commission
Provided by IHS under license with IEC
No reproduction or networking permitted without license from IHS Not for Resale

Table EE.1 – (*continued*)

Clauses of this International Standard	Where located	Corresponding paragraph of EEC Directive 93/42/EEC
31	IEC 60601-1	1 through 6 as applicable, 9.2 2nd dash, 11 as applicable
32	IEC 60601-1	1 through 6 as applicable, 9.2 2nd dash, 11 as applicable
33	IEC 60601-1	1 through 6 as applicable, 9.2 2nd dash, 11 as applicable
34	IEC 60601-1	1 through 6 as applicable, 9.2 2nd dash, 11 as applicable
35	IEC 60601-1	1 through 6 as applicable, 9.2 2nd dash, 11 as applicable
36	IEC 60601-1	1 through 6 as applicable, 9.2 2nd and 3rd dash, 11 as applicable, 12.5
42	IEC 60601-1	1 through 6 as applicable, 7.1, 9.3, 12.7.5
43	IEC 60601-1	1 through 6 as applicable, 7.1, 9.3, 12.7.5
43.2	This Standard only	1 through 6 as applicable, 7.1, 9.3, 12.7.5
44	IEC 60601-1	1 through 6 as applicable, 7.2 , 7.5, 7.6, 8.1 through 8.7 as applicable
44.3	This Standard only	1 through 6 as applicable, 12.6, 12.7.1
44.7	This Standard only	1 through 6 as applicable, 8.1 through 8.7 as applicable
44.7.101	This Standard only	1 through 6 as applicable, 8.1 through 8.7 as applicable
45	IEC 60601-1	1 through 6 as applicable, 9.2, 12.7.1
46	IEC 60601-1	1 through 6 as applicable, 9.2, 12.7.1
47	IEC 60601-1	1 through 6 as applicable, 9.2, 12.7.1
48	IEC 60601-1	1 through 6 as applicable, 9.2, 12.7.1
49	IEC 60601-1	1 through 6 as applicable, 12.6
49.101	This Standard only	1 through 6 as applicable, 9.2
49.102	This Standard only	1 through 6 as applicable, 12.3
50	IEC 60601-1	1 through 6 as applicable
51	IEC 60601-1	1 through 6 as applicable
51.101	This Standard only	1 through 6 as applicable, 9.1, 12.4
51.101.1	This Standard only	1 through 6 as applicable, 12.8.2
51.101.2	This Standard only	1 through 6 as applicable, 10.1 through 10.3, 12.4
51.101.3	This Standard only	1 through 6 as applicable, 10.1 through 10.3, 12.4
51.101.4	This Standard only	1 through 6 as applicable, 10.1 through 10.3, 12.4
51.101.5	This Standard only	1 through 6 as applicable, 12.4
51.101.6	This Standard only	1 through 6 as applicable, 12.4
51.101.7	This Standard only	1 through 6 as applicable, 7.5
51.101.8	This Standard only	1 through 6 as applicable, 10.1 through 10.3, 12.4
51.102.1	This Standard only	1 through 6 as applicable, 12.8.2
51.102.2	This Standard only	1 through 6 as applicable, 12.8.1, 12.8.2
51.102.3	This Standard only	1 through 6 as applicable, 12.8.2
51.103	This Standard only	1 through 6 as applicable, 12.4

--`,,```,,,,````-`-`,,`,,`,`,,`---

Copyright International Electrotechnical Commission
Provided by IHS under license with IEC
No reproduction or networking permitted without license from IHS Not for Resale

Table 1 – (*continued*)

51.104	This Standard only	1 through 6 as applicable, 12.4
51.105	This Standard only	1 through 6 as applicable, 12.4
52	IEC 60601-1	1 through 6 as applicable, 12.6
52.1	This Standard only	1 through 6 as applicable, 12.6
53	IEC 60601-1	1 through 6 as applicable, 12.6
54	IEC 60601-1	1 through 6 as applicable, 9.1 through 9.3 as applicable, 12.7.4
54.3	This Standard only	1 through 6 as applicable, 9.1 through 9.3 as applicable, 12.7.4
54.101	This Standard only	1 through 6 as applicable, 9.1 through 9.3 as applicable, 12.7.4
55	IEC 60601-1	1 through 6 as applicable, 9.1 through 9.3 as applicable, 12.7.4
56	IEC 60601-1	1 through 6 as applicable, 9.1 through 9.3 as applicable, 12.6, 12.7.4
56.1 aa)	This Standard only	1 through 6 as applicable, 9.1 through 9.3 as applicable, 12.6, 12.7.4
57	IEC 60601-1	1 through 6 as applicable, 9.1 through 9.3 as applicable, 12.6, 12.7.4
57.2 aa)	This Standard only	1 through 6 as applicable, 9.1 through 9.3 as applicable, 12.6, 12.7.4
57.3 a)	This Standard only	1 through 6 as applicable, 9.1 through 9.3 as applicable, 12.6, 12.7.4
57.6	This Standard only	1 through 6 as applicable, 9.1 through 9.3 as applicable, 12.6, 12.7.4
58	IEC 60601-1	1 through 6 as applicable, 9.1 through 9.3 as applicable, 12.6, 12.7.4
59	IEC 60601-1	1 through 6 as applicable, 9.1 through 9.3 as applicable, 12.6, 12.7.4
101	This Standard only	1 through 6 as applicable, 12.7.4
102	This Standard only	1 through 6 as applicable, 12.7.4
103	This Standard only	1 through 6 as applicable, 10.1 through 10.3
104	This Standard only	1 through 6 as applicable, 9.2 2nd dash
105	This Standard only	1 through 6 as applicable, 7.5, 9.2 2nd dash
106	This Standard only	1 through 6 as applicable, 12.8.1 through 12.8.3 as applicable
107	This Standard only	1 through 6 as applicable, 10.1 through 10.3, 12.8.3
108	This Standard only	1 through 6 as applicable, 12.8.2, 12.8.3
109	This Standard only	1 through 6 as applicable, 12.7.4
110	This Standard only	1 through 6 as applicable, 13.1, 13.6 applicable parts

--`,,```,,,,````-`-`,,`,,`,`,,`---

Copyright International Electrotechnical Commission
Provided by IHS under license with IEC
No reproduction or networking permitted without license from IHS Not for Resale

Bibliography

[1] NFPA 53:1999, *Recommended Practice on Materials, Equipment, and Systems Used in Oxygen-Enriched Atmospheres* [4)]

[2] EU Medical Devices Directive, 93/42/EEC

4) Available from the National Fire Protection Association, 1 Batterymarch Park, PO Box 9101, Quincy, MA 02269-9101, USA

Copyright International Electrotechnical Commission
Provided by IHS under license with IEC
No reproduction or networking permitted without license from IHS Not for Resale

Index of defined terms

ALARM CONDITION 2.201.1
ALARM LIMIT(S) 2.201.2
ALARM SIGNAL(S) 2.201.3
ALARM SYSTEM(S) 2.201.4
ANAESTHETIC AGENT MONITOR ..... ISO 11196
ANAESTHETIC BREATHING SYSTEM ..... ISO 8835-2
ANAESTHETIC GAS DELIVERY SYSTEM 2.201.5
ANAESTHETIC GAS DELIVERY SYSTEM PIPING 2.201.6
ANAESTHETIC GAS SCAVENGING TRANSFER & RECEIVING SYSTEMS ..... ISO 8835-3
ANAESTHETIC SYSTEM (WORKSTATION) 2.201.7
ANAESTHETIC VAPOUR DELIVERY DEVICE 2.201.8
ANAESTHETIC VENTILATOR 2.201.9
ANNUNCIATE, ANNUNCIATION, ANNUNCIATING 2.201.10
APPLIANCE COUPLER ..... IEC 60601-1
AUXILIARY MAINS SOCKET OUTLET(S) ..... IEC 60601-1

DISABLED 2.201.11

EQUIPMENT ..... IEC 60601-1

FLAMMABLE ANAESTHETIC AGENTS ..... IEC 60601-1
FRESH GAS OUTLET ..... ISO 4135

LEGIBLE 2.201.12

MEDICAL ELECTRICAL EQUIPMENT ..... IEC 60601-1
MEDICAL ELECTRICAL SYSTEM(S) ..... IEC 60601-1-1
MONITORING DEVICE 2.201.13

NON-LATCHING ALARM SIGNAL 2.201.14
NORMAL CONDITION ..... IEC 60601-1
NORMAL USE ..... IEC 60601-1

OPERATOR ..... IEC 60601-1
OXYGEN RICH ENVIRONMENT 2.201.15

PATIENT ..... IEC 60601-1
POWER SUPPLY 2.201.16
PRESSURE REGULATOR(S) ..... ISO 10524
PROTECTION DEVICE(S) 2.201.17

RATED ..... IEC 60601-1
RESERVE ELECTRICAL POWER SOURCE 2.201.18

SAFETY HAZARD ..... IEC 60601-1
SILENCED 2.201.19
SINGLE FAULT CONDITION ..... IEC 60601-1

USER ..... IEC 60601-1

Copyright International Electrotechnical Commission
Provided by IHS under license with IEC
No reproduction or networking permitted without license from IHS Not for Resale

Standards Survey

The IEC would like to offer you the best quality standards possible. To make sure that we continue to meet your needs, your feedback is essential. Would you please take a minute to answer the questions overleaf and fax them to us at +41 22 919 03 00 or mail them to the address below. Thank you!

Customer Service Centre (CSC)

International Electrotechnical Commission
3, rue de Varembé
1211 Genève 20
Switzerland

or

Fax to: **IEC**/CSC at +41 22 919 03 00

Thank you for your contribution to the standards-making process.

A Prioritaire

Nicht frankieren
Ne pas affranchir

Non affrancare
No stamp required

RÉPONSE PAYÉE

SUISSE

Customer Service Centre (CSC)
International Electrotechnical Commission
3, rue de Varembé
1211 GENEVA 20
Switzerland

Copyright International Electrotechnical Commission
Provided by IHS under license with IEC
No reproduction or networking permitted without license from IHS
Not for Resale

Q1 Please report on **ONE STANDARD** and **ONE STANDARD ONLY**. Enter the exact number of the standard: *(e.g. 60601-1-1)*

.....

Q2 Please tell us in what capacity(ies) you bought the standard *(tick all that apply).* I am the/a:

purchasing agent ❑
librarian ❑
researcher ❑
design engineer ❑
safety engineer ❑
testing engineer ❑
marketing specialist ❑
other.....

Q3 I work for/in/as a: *(tick all that apply)*

manufacturing ❑
consultant ❑
government ❑
test/certification facility ❑
public utility ❑
education ❑
military ❑
other.....

Q4 This standard will be used for: *(tick all that apply)*

general reference ❑
product research ❑
product design/development ❑
specifications ❑
tenders ❑
quality assessment ❑
certification ❑
technical documentation ❑
thesis ❑
manufacturing ❑
other.....

Q5 This standard meets my needs: *(tick one)*

not at all ❑
nearly ❑
fairly well ❑
exactly ❑

Q6 If you ticked NOT AT ALL in Question 5 the reason is: *(tick all that apply)*

standard is out of date ❑
standard is incomplete ❑
standard is too academic ❑
standard is too superficial ❑
title is misleading ❑
I made the wrong choice ❑
other .....

Q7 Please assess the standard in the following categories, using the numbers:
(1) unacceptable,
(2) below average,
(3) average,
(4) above average,
(5) exceptional,
(6) not applicable

timeliness.....
quality of writing.....
technical contents.....
logic of arrangement of contents .....
tables, charts, graphs, figures.....
other .....

Q8 I read/use the: *(tick one)*

French text only ❑
English text only ❑
both English and French texts ❑

Q9 Please share any comment on any aspect of the IEC that you would like us to know:

.....
.....
.....
.....
.....
.....
.....
.....
.....
.....
.....
.....

--`,,```,,,,````-`-`,,`,,`,`,,`---

Copyright International Electrotechnical Commission
Provided by IHS under license with IEC
No reproduction or networking permitted without license from IHS

Not for Resale

--`,,```,,,,````-`-`,,`,,`,`,,`---

Copyright International Electrotechnical Commission
Provided by IHS under license with IEC
No reproduction or networking permitted without license from IHS Not for Resale

ISBN 2-8318-7027-5



ICS 11.040.10

Typeset and printed by the IEC Central Office
GENEVA, SWITZERLAND

--`,,```,,,,````-`-`,,`,,`,`,,`---

Copyright International Electrotechnical Commission
Provided by IHS under license with IEC
No reproduction or networking permitted without license from IHS

Not for Resale