INTERNATIONAL STANDARD

IEC 60587

Third edition
2007-05

Electrical insulating materials used under severe ambient conditions – Test methods for evaluating resistance to tracking and erosion



Reference number
IEC 60587:2007(E)

Copyright International Electrotechnical Commission
Provided by IHS under license with IEC
No reproduction or networking permitted without license from IHS
Not for Resale

THIS PUBLICATION IS COPYRIGHT PROTECTED

Copyright © 2007 IEC, Geneva, Switzerland

All rights reserved. Unless otherwise specified, no part of this publication may be reproduced or utilized in any form or by any means, electronic or mechanical, including photocopying and microfilm, without permission in writing from either IEC or IEC's member National Committee in the country of the requester.

If you have any questions about IEC copyright or have an enquiry about obtaining additional rights to this publication, please contact the address below or your local IEC member National Committee for further information.

IEC Central Office
3, rue de Varembé
CH-1211 Geneva 20
Switzerland
Email: inmail@iec.ch
Web: www.iec.ch

About the IEC

The International Electrotechnical Commission (IEC) is the leading global organization that prepares and publishes International Standards for all electrical, electronic and related technologies.

About IEC publications

The technical content of IEC publications is kept under constant review by the IEC. Please make sure that you have the latest edition, a corrigenda or an amendment might have been published.

- Catalogue of IEC publications: www.iec.ch/searchpub

The IEC on-line Catalogue enables you to search by a variety of criteria (reference number, text, technical committee,…). It also gives information on projects, withdrawn and replaced publications.

- IEC Just Published: www.iec.ch/online_news/justpub

Stay up to date on all new IEC publications. Just Published details twice a month all new publications released. Available on-line and also by email.

- Customer Service Centre: www.iec.ch/webstore/custserv

If you wish to give us your feedback on this publication or need further assistance, please visit the Customer Service Centre FAQ or contact us:

Email: csc@iec.ch
Tel.: +41 22 919 02 11
Fax: +41 22 919 03 00

Copyright International Electrotechnical Commission
Provided by IHS under license with IEC
No reproduction or networking permitted without license from IHS
Not for Resale

INTERNATIONAL STANDARD

IEC 60587

Third edition
2007-05

Electrical insulating materials used under severe ambient conditions – Test methods for evaluating resistance to tracking and erosion

Commission Electrotechnique Internationale
International Electrotechnical Commission
Международная Электротехническая Комиссия

PRICE CODE P

For price, see current catalogue

Copyright International Electrotechnical Commission
Provided by IHS under license with IEC
No reproduction or networking permitted without license from IHS

Not for Resale

CONTENTS

FOREWORD 3

1 Scope 5
2 Terms and definitions 5
3 Test specimens 6
3.1 Dimensions 6
3.2 Preparation 6
4 Apparatus 6
4.1 Electrical apparatus 6
4.2 Electrodes 8
4.3 Contaminant 9
4.4 Timing device 10
4.5 Depth gauge 10
4.6 Ventilation 10
5 Procedure 11
5.1 Preparation of the test 11
5.2 Method 1: Application of constant tracking voltage 13
5.3 Method 2: stepwise tracking voltage 14
5.4 End-point criteria 14
6 Test report 15

Table 1 – Test parameters 8

Figure 1 – Test specimen with holes for fixing electrodes 6
Figure 2 – Schematic circuit diagram 7
Figure 3 – Example: typical circuit for an overcurrent delay relay (F in Figure 2) 8
Figure 4 – Top electrode, stainless steel 0,5 mm thick 9
Figure 5 – Bottom electrode, stainless steel 0,5 mm thick 9
Figure 6 – Assembly of the electrodes 10
Figure 7 – Test assembly, schematic 11
Figure 8 – Mounting support 12
Figure 9 – Filter-paper (eight sheets requested for each top electrode) 12

Copyright International Electrotechnical Commission
Provided by IHS under license with IEC
No reproduction or networking permitted without license from IHS Not for Resale

INTERNATIONAL ELECTROTECHNICAL COMMISSION

ELECTRICAL INSULATING MATERIALS USED UNDER SEVERE AMBIENT CONDITIONS – TEST METHODS FOR EVALUATING RESISTANCE TO TRACKING AND EROSION

FOREWORD

1) The International Electrotechnical Commission (IEC) is a worldwide organization for standardization comprising all national electrotechnical committees (IEC National Committees). The object of IEC is to promote international co-operation on all questions concerning standardization in the electrical and electronic fields. To this end and in addition to other activities, IEC publishes International Standards, Technical Specifications, Technical Reports, Publicly Available Specifications (PAS) and Guides (hereafter referred to as "IEC Publication(s)"). Their preparation is entrusted to technical committees; any IEC National Committee interested in the subject dealt with may participate in this preparatory work. International, governmental and non-governmental organizations liaising with the IEC also participate in this preparation. IEC collaborates closely with the International Organization for Standardization (ISO) in accordance with conditions determined by agreement between the two organizations.
2) The formal decisions or agreements of IEC on technical matters express, as nearly as possible, an international consensus of opinion on the relevant subjects since each technical committee has representation from all interested IEC National Committees.
3) IEC Publications have the form of recommendations for international use and are accepted by IEC National Committees in that sense. While all reasonable efforts are made to ensure that the technical content of IEC Publications is accurate, IEC cannot be held responsible for the way in which they are used or for any misinterpretation by any end user.
4) In order to promote international uniformity, IEC National Committees undertake to apply IEC Publications transparently to the maximum extent possible in their national and regional publications. Any divergence between any IEC Publication and the corresponding national or regional publication shall be clearly indicated in the latter.
5) IEC provides no marking procedure to indicate its approval and cannot be rendered responsible for any equipment declared to be in conformity with an IEC Publication.
6) All users should ensure that they have the latest edition of this publication.
7) No liability shall attach to IEC or its directors, employees, servants or agents including individual experts and members of its technical committees and IEC National Committees for any personal injury, property damage or other damage of any nature whatsoever, whether direct or indirect, or for costs (including legal fees) and expenses arising out of the publication, use of, or reliance upon, this IEC Publication or any other IEC Publications.
8) Attention is drawn to the Normative references cited in this publication. Use of the referenced publications is indispensable for the correct application of this publication.
9) Attention is drawn to the possibility that some of the elements of this IEC Publication may be the subject of patent rights. IEC shall not be held responsible for identifying any or all such patent rights.

International Standard IEC 60587 has been prepared by IEC technical committee 112: Evaluation and qualification of electrical insulating materials and systems.

This third edition cancels and replaces the second edition, published in 1984, and constitutes a technical revision. The main changes from the previous edition are as follows: experience has indicated the need for improved description of the experimental method. For the preparation of the test specimens abrasion is recommended only if necessary. The ventilation of the test chamber is described in detail. For specimens of soft elastomeric materials a mounting support is described. The maximum depth of erosion has to be reported in the classification.

--`,,```,,,,````-`-`,,`,,`,`,,`---
Copyright International Electrotechnical Commission
Provided by IHS under license with IEC
No reproduction or networking permitted without license from IHS Not for Resale

The text of this standard is based on the following documents:

FDIS	Report on voting
112/56/FDIS	112/61A/RVD

Full information on the voting for the approval of this standard can be found in the report on voting indicated in the above table.

This publication has been drafted in accordance with the ISO/IEC Directives, Part 2.

The committee has decided that the contents of this publication will remain unchanged until the maintenance result date indicated on the IEC web site under "http://webstore.iec.ch" in the data related to the specific publication. At this date, the publication will be

- reconfirmed;
- withdrawn;
- replaced by a revised edition, or
- amended.

A bilingual version of this publication may be issued at a later date.

--`,,```,,,,````-`-`,,`,,`,`,,`---

Copyright International Electrotechnical Commission
Provided by IHS under license with IEC
No reproduction or networking permitted without license from IHS Not for Resale

ELECTRICAL INSULATING MATERIALS USED UNDER SEVERE AMBIENT CONDITIONS – TEST METHODS FOR EVALUATING RESISTANCE TO TRACKING AND EROSION

1 Scope

This International standard describes two test methods for the evaluation of electrical insulating materials for use under severe ambient conditions at power frequencies (45 Hz to 65 Hz) by measurement of the resistance to tracking and erosion, using a liquid contaminant and inclined plane specimens. The two methods are as follows:

– Method 1: constant tracking voltage;
– Method 2: stepwise tracking voltage.

NOTE 1 Method 1 is the most widely used method as there is less need for continual inspection.

NOTE 2 The test conditions are designed to accelerate the production of the effects, but do not reproduce all the conditions encountered in service.

2 Terms and definitions

For the purposes of this document, the following terms and definitions apply.

2.1
track
partially conducting path created by localized deterioration on the surface of an insulating material

2.2
tracking
progressive degradation of the surface of a solid insulating material by local discharges to form conducting or partially conducting paths

NOTE Tracking usually occurs due to surface contamination.

[IEC 60050-212-01-42[1]]

2.3
erosion, electrical
loss of material by leakage current or electrical discharge

2.4
time-to-track
time required to produce tracks under the specified conditions of test

[1] IEC 60050-212:1990, *International Electrotechnical Vocabulary – Chapter 212: Insulating solids, liquids and gases*

Copyright International Electrotechnical Commission
Provided by IHS under license with IEC
No reproduction or networking permitted without license from IHS Not for Resale

3 Test specimens

3.1 Dimensions

Flat specimens with a size of at least 50 mm X 120 mm shall be used. The preferred thickness shall be 6 mm. Other thicknesses may be used, but must be mentioned in the test report. The specimens shall be drilled as shown in Figure 1, to attach the electrodes.

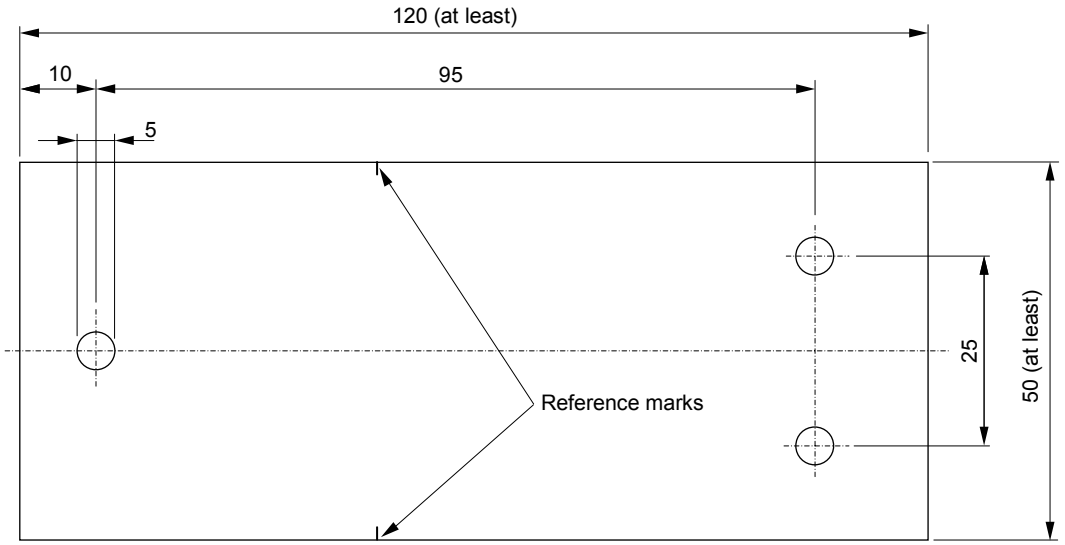

Dimensions in millimetres

Figure 1 – Test specimen with holes for fixing electrodes

3.2 Preparation

The specimens shall be washed with a suitable solvent (e.g. isopropyl alcohol) to remove leftovers such as fat from handling. After that the specimens shall be rinsed with distilled water.

The cleaned specimens shall be mounted carefully to avoid contamination.

If the contaminant does not wet the surface evenly within the observation time mentioned in 5.1, the surface of the specimens can be slightly abraded. The abrasion should be done with a fine (U.S. grade (CAMI): 400 mesh; European grade (FEPA): P800) aluminium-oxide- or zirconia-aluminia-abrasive under water until the whole surface wets and appears uniformly matt when dry. When abraded the specimen shall be cleaned another time with distilled water.

Abrasion has to be mentioned in the test report.

Specimens used for criterion B (see 5.4) shall have reference marks on both edges, 25 mm above the lower electrode (see Figures 1 and 7).

4 Apparatus

4.1 Electrical apparatus

A schematic circuit is given in Figure 2. As the test will be carried out at high voltages, it is obviously necessary to use an earthed safety enclosure. The circuit comprises:

Copyright International Electrotechnical Commission
Provided by IHS under license with IEC
No reproduction or networking permitted without license from IHS Not for Resale

– A 45 Hz to 65 Hz power supply with an output voltage stabilized to ±5 % which can be varied up to about 6 kV with a rated current not less than 0,1 A for each specimen. Preferred test voltages are 2,5 kV, 3,5 kV and 4,5 kV, for method 1.

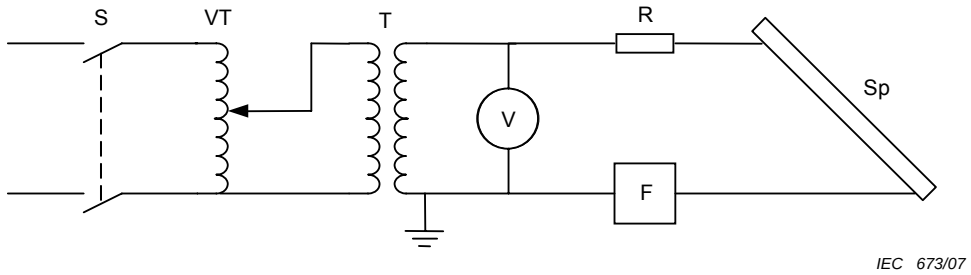

Components

S	power supply switch
VT	variable ratio transformer
T	high-voltage transformer
R	series resistor
V	voltmeter
Sp	specimen
F	overcurrent device, fuse or relay

Figure 2 – Schematic circuit diagram

NOTE If only one power supply is used for several specimens, each should have a circuit-breaker or a similar device (see 4.1, last sentence).

– A 200 W resistor with ±10 % tolerance in series with each specimen at the high-voltage side of the power supply. The resistance of the resistor shall be taken from Table 1.

Copyright International Electrotechnical Commission
Provided by IHS under license with IEC
No reproduction or networking permitted without license from IHS Not for Resale

Table 1 – Test parameters

Test voltage kV	Preferred test voltage for method 1 kV	Contaminant flow rate ml/min	Series resistor, Resistance kΩ
1,0 to 1,75	-	0,075	1
2,0 to 2,75	2,5	0,15	10
3,0 to 3,75	3,5	0,30	22
4,0 to 4,75	4,5	0,60	33
5,0 to 6,0	-	0,90	33

– A true r.m.s. voltmeter with an accuracy of 1,5 % of reading shall be used.

– An overcurrent delay relay (for example see Figure 3) or any other device which operates when 60 mA ± 6 mA or more has persisted in the high-voltage circuit for 2 s to 3 s.

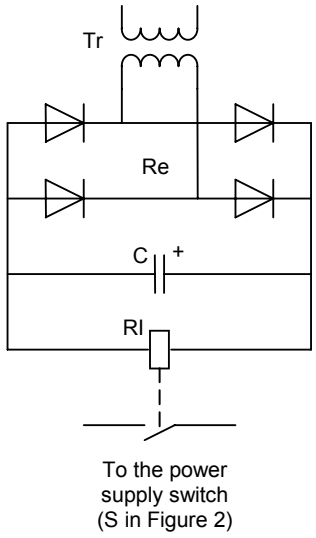

Components

Re rectifier
Tr transformer (winding 300/900 turns)
Rl relay (2 500 Ω/11 000 turns)
C capacitor (200 µF)

Figure 3 – Example: typical circuit for an overcurrent delay relay (F in Figure 2)

4.2 Electrodes

All electrodes, fixtures and assembly elements associated with the electrodes, such as screws, shall be made of stainless steel e.g. grade 302. The electrode assembly is shown in Figure 6.

NOTE The electrodes shall be cleaned prior to each test and replaced when necessary.

The top electrode is shown in Figure 4. The bottom electrode is shown in Figure 5.

--`,,```,,,,````-`-`,,`,,`,`,,`---

Copyright International Electrotechnical Commission
Provided by IHS under license with IEC
No reproduction or networking permitted without license from IHS Not for Resale

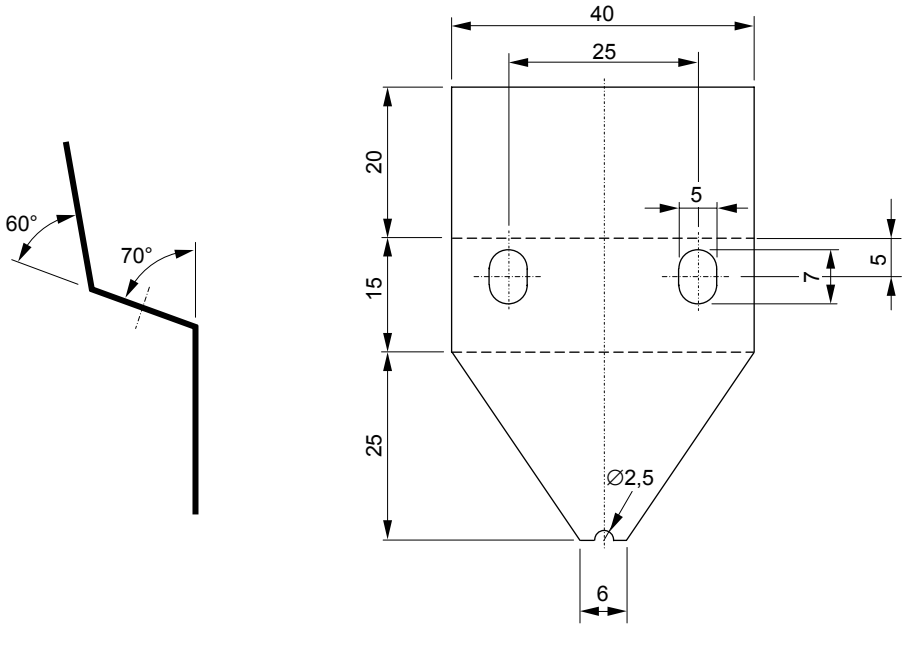

Dimensions in millimetres

Figure 4 – Top electrode, stainless steel 0,5 mm thick

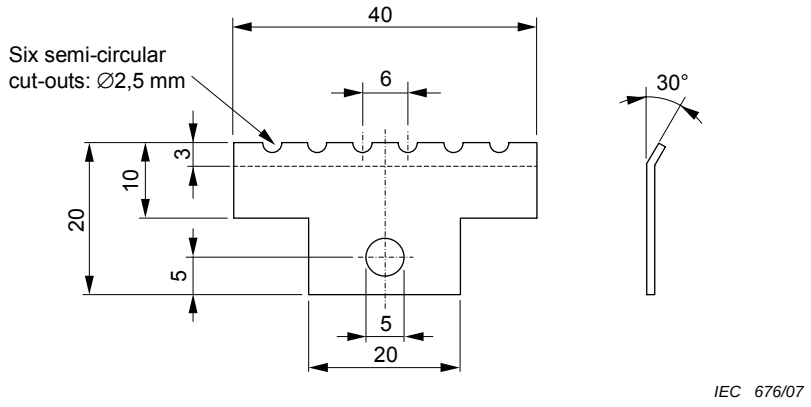

Dimensions in millimetres

Figure 5 – Bottom electrode, stainless steel 0,5 mm thick

4.3 Contaminant

Unless otherwise specified use

– 0,1 % ± 0,002 % by mass of NH4Cl (ammonium chloride) analytical quality, and

– 0,02 % ± 0,002 % by mass of isooctylphenoxypolyethoxyethanol (a non-ionic wetting agent) in distilled or de-ionized water.

– This contaminant shall have a resistivity of 3,95 Ωm ± 0,05 Ωm at 23 °C ± 1 °C.

– The contaminant shall be not more than four weeks old and its resistivity shall be checked before each series of tests.

– Eight layers of filter-paper with a thickness of 0,2 mm ± 0,02 mm, of the approximate dimensions given in Figure 9, are clamped between the top electrode and the specimen to act as a reservoir for the contaminant.

– The contaminant shall be fed into this filter-paper pad so that a uniform flow between the top and the bottom electrodes shall occur before voltage application.

Copyright International Electrotechnical Commission
Provided by IHS under license with IEC
No reproduction or networking permitted without license from IHS Not for Resale

NOTE This can be done by pumping the contaminant through a tube into the filter-paper pad. The tube can be held between the filter papers by a clip of stainless steel. Another possibility is to drip the contaminant into the filter-paper pad with a fixed drop size and fixed number of drops per minute.

– The rate of application of contaminant shall be that within ± 10 % specified in Table 1 in relation to the applied voltage.

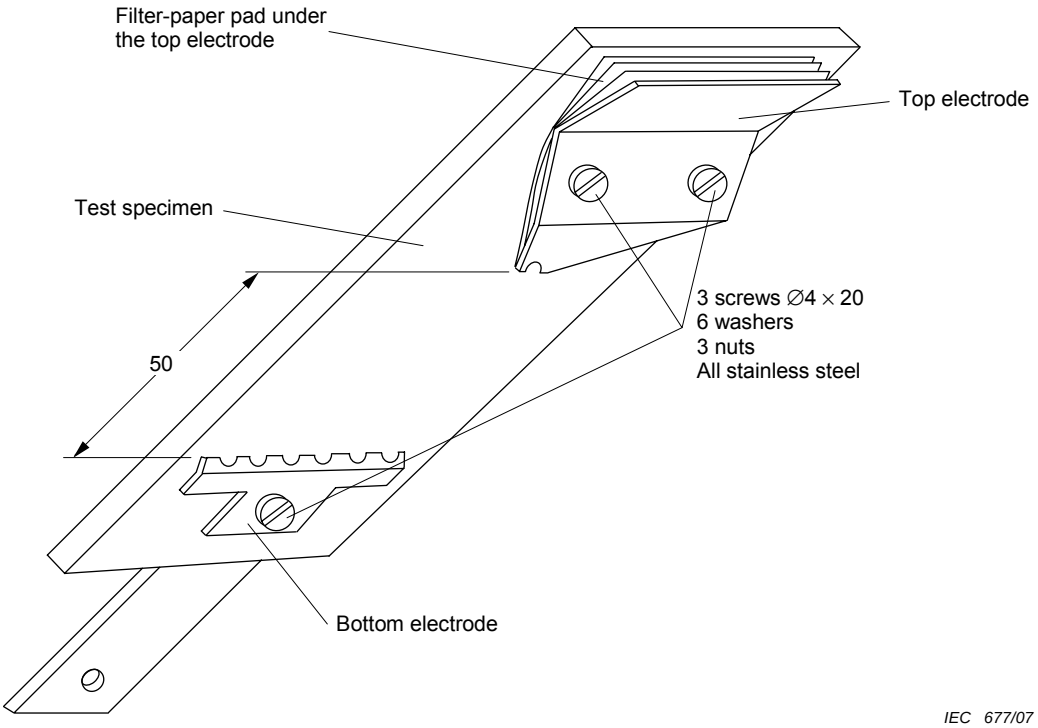

Dimensions in millimetres

Figure 6 – Assembly of the electrodes

4.4 Timing device

A timing device with an accuracy of about ±1 min/h shall be used.

NOTE For example a 1 min pulser with a counter is acceptable.

4.5 Depth gauge

A depth gauge with an accuracy of ±0,01 mm shall be used. The point of the probe shall be hemispherical with a radius of 0,25 mm.

4.6 Ventilation

The test chamber shall be equipped with a ventilation to allow an exhaust of steam and gaseous decomposition products. The ventilation of the test chamber should be moderate and constant to avoid permanent condensation of water. Direct airflow across the test specimens shall be avoided.

NOTE Experience shows that the intensity of ventilation may influence the test result.

Copyright International Electrotechnical Commission
Provided by IHS under license with IEC
No reproduction or networking permitted without license from IHS Not for Resale

5 Procedure

5.1 Preparation of the test

Unless otherwise specified, the test shall be carried out at an ambient temperature of 23 °C ± 2 °C on sets of at least five specimens for each material.

Mount the specimen, with the flat test surface on the underside, at an angle of 45° ± 2° from the horizontal as shown in Figure 7, with the electrodes 50 mm ± 0,5 mm apart. The test for further 5 specimen can be achieved either simultaneously or respectively.

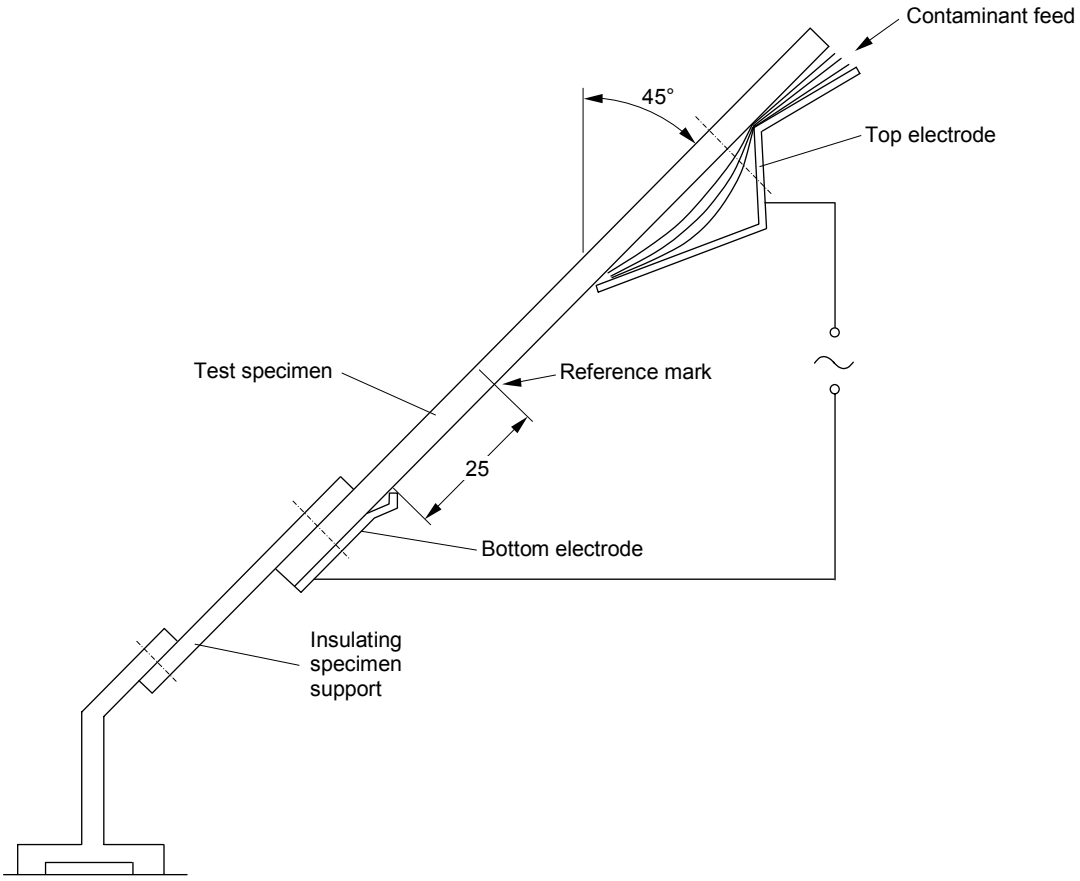

Dimensions in millimetres

Figure 7 – Test assembly, schematic

NOTE 1 For each test, use a new filter-paper pad (see Figure 9).

If the specimen is not self-supporting an insulating mounting support for the specimen must be used. The mounting support shall be such that the heat dissipation from the back of the sample is not hindered and the material shall be heat resistant and electrically insulating (e.g. PTFE). An example of a mounting support is shown in Figure 8.

Start introducing the contaminant into the filter-paper pad allowing the contaminant to wet the paper thoroughly. Adjust the contaminant flow and calibrate to give a flow rate as specified in Table 1. Observe the flow for at least 10 min and ensure that the contaminant flows steadily down the face of the test specimen between the electrodes. The contaminant shall flow from the quill hole of the top electrode and not from the sides or the top of the filter-paper.

Copyright International Electrotechnical Commission
Provided by IHS under license with IEC
No reproduction or networking permitted without license from IHS Not for Resale

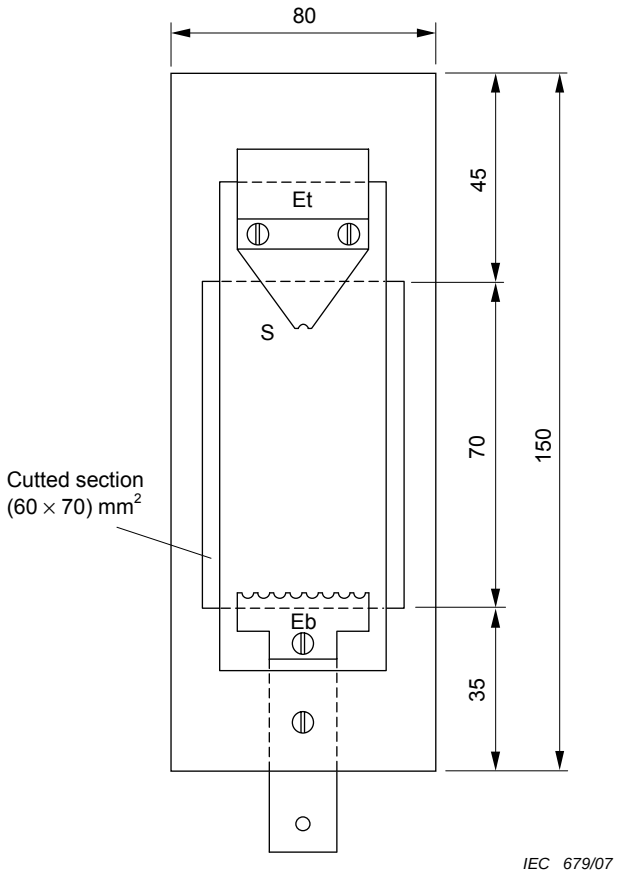

Dimensions in millimetres

Components

Et	top electrode
Eb	bottom electrode
MS	mounting support
S	specimen

Figure 8 – Mounting support

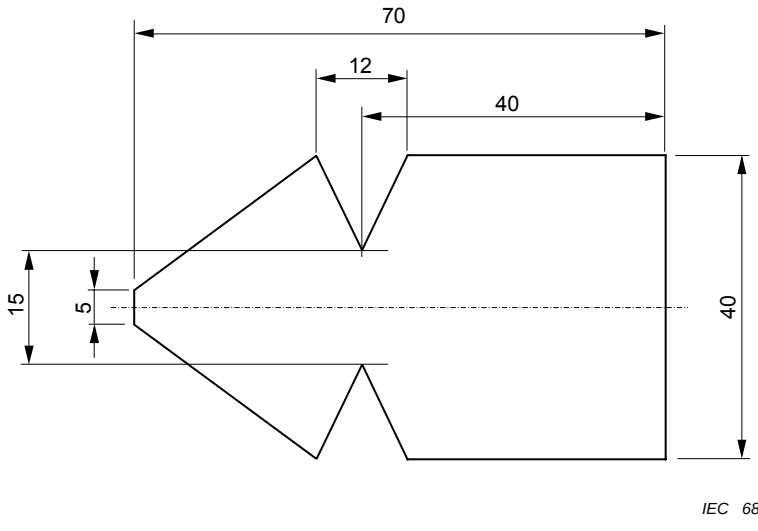

Dimensions in millimetres

Figure 9 – Filter-paper (eight sheets requested for each top electrode)

--`,,```,,,,````-`-`,,`,,`,`,,`---

Copyright International Electrotechnical Commission
Provided by IHS under license with IEC
No reproduction or networking permitted without license from IHS Not for Resale

5.2 Method 1: Application of constant tracking voltage

With the contaminant flowing uniformly at the specified rate, according to Table 1, switch on and raise the voltage to one of the preferred test voltages, 2,5 kV, 3,5 kV or 4,5 kV, which should be reached within a maximum of 10 s, and start the timing device. The voltage shall be maintained constant for 6 h.

If the test has to be repeated at a higher or lower voltage, a further set of five specimens shall be tested for each selected preferred voltage.

The constant tracking voltage is the highest voltage withstood by all five specimens for 6 h without failure (see 5.4).

Classification of the material is as follows:

Class 1A 0 or 1B 0

if any specimen fails at 2,5 kV in less than 6 h according to criterion A or B of 5.4.

Class 1A 2,5 or 1B 2,5

if all five specimens survive 6 h at 2,5 kV and if any specimen fails at 3,5 kV in less than 6 h.

Class 1A 3,5 or 1B 3,5

if all five specimens survive 6 h at 3,5 kV and if any specimen fails at 4,5 kV in less than 6 h.

Class 1A 4,5 or 1B 4,5

if all five specimens survive 6 h at 4,5 kV.

In each case, the maximum depth of erosion is to be reported.

--`,,```,,,,````-`-`,,`,,`,`,,`---

Copyright International Electrotechnical Commission
Provided by IHS under license with IEC
No reproduction or networking permitted without license from IHS Not for Resale

5.3 Method 2: stepwise tracking voltage

Select a starting voltage, being a multiple of 250 V, such that failure according to criterion A of 5.4 (current exceeding 60 mA) does not occur sooner than the third voltage step (a preliminary trial test may be necessary). With the contaminant flowing uniformly at the specified rate, switch on and raise the voltage to the selected value. Maintain this voltage for 1 h and increase the voltage by a step of 250 V for each subsequent hour until failure by criterion A is recorded. As the voltage is increased the contaminant flow rate and the resistance value of the series resistor are increased according to Table 1.

The stepwise tracking voltage is the highest voltage withstood by all five specimens for 1 h without failure.

Classification of the material is as follows:

Class 2A x or 2B x, where x is the highest voltage, in kilovolts, withstood by the material under test.

NOTE 1 Effective scintillation is essential and if not obtained, the electrical circuit, the contaminant flow characteristics and contaminant resistivity should be carefully checked.

Scintillation means the existence of small yellow to white (with some materials occasionally blue) arcs just above the teeth of the lower electrode, within a few minutes of application of the voltage. These discharges should occur in an essentially continuous manner, although they may jump from one tooth to another. These discharges will burn away the specimen surface and may ultimately lead to tracking failure. Discharges which move rapidly over the surface between the two electrodes are not likely to produce tracks.

The condition of effective scintillation may also be observed with a cathode-ray oscilloscope. The signal may be picked up across a resistor (e.g. 330 Ω, 2 W) placed in series with the overcurrent device. Proper scintillation is observed as a continual, but non-uniform, break-up of the power frequency current wave during each half cycle.

NOTE 2 The overcurrent device should operate before the track reaches the top electrode when a 60 mA current flows in the conducting track and in the stream of electrolyte remaining on the surface.

NOTE 3 Erosion depth is measured after scraping away or otherwise removing decomposed insulation and debris, taking care not to remove any undamaged test material.

5.4 End-point criteria

Two criteria for determining the end point of the test are in use:

Criterion A:

The end point is reached when the value of the current in the high voltage circuit through the specimen exceeds 60 mA (an overcurrent device then breaks this current not before 2 s, but not later than 4 s) or when a specimen shows a hole due to intensive erosion or the specimen ignites.

NOTE 1 The 60 mA end point criterion permits the use of an automatic apparatus testing several specimens simultaneously.

NOTE 2 Flammability failure occurs with some materials which ignite during the test.

Criterion B:

The end point is reached when the track reaches a mark on the specimen surface 25 mm from the lower electrode (see Figures 1 and 7) or when a specimen shows a hole due to intensive erosion or the specimen ignites.

NOTE 3 This end point criterion (criterion B) requires constant visual supervision and manual control.

NOTE 4 Criterion A without ignition is the preferred criterion.

Copyright International Electrotechnical Commission
Provided by IHS under license with IEC
No reproduction or networking permitted without license from IHS Not for Resale

6 Test report

The report shall include:

a) type and designation of material tested;

b) details of the specimens: fabrication and dimensions, cleaning procedure and solvent used, surface treatment if any, pre-conditioning. The thickness shall be reported;

c) orientation of composite specimen (like fibre-reinforced plastic) with respect to the electrodes (i.e. machine direction, cross-machine direction, bias, etc.);

d) method for the application of the voltage and end point criterion used. Classification according to 5.2;

e) the maximum depth of erosion has to be reported in the classification. For example a maximum erosion depth of 0,5 mm as 1 A 3,5 – 0,5.

--`,,```,,,,````-`-`,,`,,`,`,,`---
Copyright International Electrotechnical Commission
Provided by IHS under license with IEC
No reproduction or networking permitted without license from IHS Not for Resale

ISBN 2-8318-9149-3



ICS 17.220.99; 29.035.01

Typeset and printed by the IEC Central Office
GENEVA, SWITZERLAND

Copyright International Electrotechnical Commission
Provided by IHS under license with IEC
No reproduction or networking permitted without license from IHS

Not for Resale