INTERNATIONAL STANDARD

IEC 60489-8

1984

AMENDMENT 1
2000-10

Amendment 1

Methods of measurement for radio equipment used in the mobile services

Part 8: Methods of measurement for antennas and ancillary equipment

Amendement 1

Méthodes de mesure applicables au matériel de radiocommunication utilisé dans les service mobiles –

Partie 8: Méthodes de mesure applicables aux antennes et matériels accessoires

© IEC 2000 — Copyright - all rights reserved

International Electrotechnical Commission 3, rue de Varembé Geneva, Switzerland
Telefax: +41 22 919 0300 e-mail: inmail@iec.ch IEC web site http://www.iec.ch

Commission Electrotechnique Internationale
International Electrotechnical Commission
Международная Электротехническая Комиссия

PRICE CODE U

For price, see current catalogue

Copyright International Electrotechnical Commission
Provided by IHS under license with IEC
No reproduction or networking permitted without license from IHS

Not for Resale

FOREWORD

This amendment has been prepared by IEC technical committee 102: Equipment used in radio communications for mobile services and for satellite communication systems.

The text of this amendment is based on the following documents:

FDIS	Report on voting
102/62/FDIS	102/63/RVD

Full information on the voting for the approval of this amendment can be found in the report on voting indicated in the above table.

A bilingual version of this amendment may be issued at a later date.

_____

Amend the title of this standard on the cover page, the title page and on pages 5 and 9 as follows:

Part 8: Methods of measurement for antennas and ancillary equipment

Page 3

CONTENTS

Add the title of the following new clause 9 in Section two:

9 Measurement of duplexers

Add the following new section and annexes.

Section three – Vehicular antennas and conditions

10 Supplementary definitions and conditions

11 Standing-wave ratio

12 Radiation pattern

13 Relative antenna gain

Copyright International Electrotechnical Commission
Provided by IHS under license with IEC
No reproduction or networking permitted without license from IHS Not for Resale

14 Antenna power rating

15 Measurement of electrical performance parameter under adverse environmental conditions

Annex C (normative) Ground-plan test mounting

Annex D (normative) Standard antenna for mounting on a ground plane

Annex E (normative) Requirements for test equipment in power rating measurement

Page 9

Replace the text of clauses 1 and 2 as follows:

1 Scope

This International Standard refers specifically to the antennas and ancillary equipment used in the mobile services.

This standard is intended to be used in conjunction with IEC 60489-1.

The supplementary terms and definitions and the conditions of measurement set forth in this standard are intended for type tests and may also be used for acceptance tests.

2 Object

The object of this standard is to standardize the definitions, the conditions and the methods of measurement used to ascertain the performance of antennas and ancillary equipment (for example, duplexer) within the scope of this standard and to make possible a meaningful comparison of the results of measurements made by different observers on different equipment.

Page 19

Add the following new clause 9 and new figures after subclause 8.4:

9 Measurement of duplexers

9.1 General

9.1.1 Supplementary terms and definitions

For the purposes of this standard, the following supplementary terms and definitions apply.

--`,,,``,,-`-`,,`,,`,`,,`---

Copyright International Electrotechnical Commission
Provided by IHS under license with IEC
No reproduction or networking permitted without license from IHS Not for Resale

9.1.1.1
duplexer
device allowing the same antenna to be used for simultaneous transmission and reception [IEV 712-06-16]

NOTE There are three terminals which are connected to the transmitter, the receiver and the antenna respectively in a duplexer. The branch from the transmitting terminal to the terminal of the antenna is referred to as the transmitting branch. The branch from the terminal of the antenna to the receiving terminal is referred to as the receiving branch.

9.1.1.2
frequency stability (temperature)
drift characteristic of the extreme frequency at which the specified duplexer performance is satisfied, with temperature. It is expressed as parts per million per centigrade (10^{-6}/°C). The duplexer performance (for example, transmitter noise suppression-ability, transmitter-to-receiver isolation-ability, insertion loss and SWR) should be measured under the condition of specified temperature range and more than specified frequency range

9.1.2
standard test condition
unless otherwise specified, all measurements should be performed under the general test conditions as stated in IEC 60489-1 and the supplementary test conditions given below

9.1.3 Supplementary test conditions

9.1.3.1
test load
non-radiating load with an impedance and power rating specified by the duplexer manufacturer

9.1.3.2
connections to the measuring equipment
care must be taken to ensure that measuring equipment does not adversely affect the duplexer loading conditions

9.2 Transmitter noise suppression-ability

9.2.1 Definition

The ability of the duplexer to suppress the transmitter noise on the frequency band of the receiver, so as to prevent the desired performance of the receiver from degrading.

It is expressed by the minimum coupling attenuation value from the transmitting terminal to the receiving terminal of the duplexer in the above frequency band.

9.2.2 Method of measurement

a) Connect the equipment as illustrated in figure 1.

b) Connect point P1 to P2. Adjust the frequency of the generator (1) to any one within the specified operating frequencies of the receiving branch.

   Adjust the output of the generator (1) and attenuation of the attenuator (2) to provide a signal level within the linear range of the selective measuring device (4). Record the level and value of attenuation.

c) If required, repeat step b) at another specified operating frequency.

--`,,,``,-`-`,,`,,`,`,,`---
Copyright International Electrotechnical Commission
Provided by IHS under license with IEC
No reproduction or networking permitted without license from IHS Not for Resale

d) Connect point P1 to the transmitting terminal (Tx) of the duplexer, and point P2 to the receiving terminal (Rx) of the duplexer.

While maintaining the output of the generator (1) established in step b), vary the frequency over the specified operating range of the receiving branch and adjust the attenuator (2) to provide a signal level within the linear range of the selective measuring device (4). Record the level and the value of the attenuation at each frequency.

9.2.3 Presentation of results

a) Calculate the ratio, in dB, of the recorded level in step b) of 9.2.2 to recorded level in step d) of 9.2.2 and the difference, in dB, between the recorded attenuation in step b) of 9.2.2 and the recorded attenuation in step d) of 9.2.2. Add the value of both the ratio and the difference. Record this coupling attenuation value, in dB.

b) Plot the coupling attenuation value recorded in step a) on the linear ordinate of a graph versus the corresponding frequency on the linear abscissa.

c) The minimum coupling attenuation value in the graph is referred to as transmitter noise suppression ability of the duplexer.

9.3 Transmitter-to-receiver isolation ability

9.3.1 Definition

The ability of the duplexer to isolate the transmitter output power level so as to prevent the desired performance of the receiver from degrading.

It is expressed by the minimum coupling attenuation value from the transmitting terminal to the receiving terminal of the duplexer in the transmitting frequency band.

9.3.2 Method of measurement

a) Connect the equipment as illustrated in figure 1.

b) Connect point P1 to P2. Adjust the frequency of the generator (1) to any one within the specified operating frequencies of the transmitting branch.

Adjust the output of the generator (1) and attenuation of the attenuator (2) to provide a signal level within the linear range of the selective measuring device (4). Record the level and value of attenuation.

c) If required, repeat step b) at another specified operating frequency.

d) Connect point P1 to the transmitting terminal (Tx) of the duplexer, and point P2 to the receiving terminal (Rx) of the duplexer.

While maintaining the output of generator (1) established in step b), vary the frequency over the specified operating range of the transmitting branch and adjust the attenuation of attenuator (2) to provide a signal level within the linear range of the selective measuring device (4). Record the level and the value of attenuation at each frequency.

9.3.3 Presentation of results

a) Calculate the ratio, in dB, of the recorded level in step b) of 9.3.2 to the recorded level in step d) of 9.3.2, and the difference, in dB, between the recorded attenuation in step b) of 9.3.2 and the recorded attenuation in step d) of 9.3.2. Add the values of both the ratio and difference. Record this coupling attenuation value, in dB.

b) Plot the coupling attenuation value recorded in step a) on the linear ordinate of a graph versus the corresponding frequency on the linear abscissa.

c) The minimum coupling attenuation value in the graph is referred to as transmitter-to-receiver isolation ability of the duplexer.

Copyright International Electrotechnical Commission
Provided by IHS under license with IEC
No reproduction or networking permitted without license from IHS Not for Resale

9.4 Insertion loss

9.4.1 Definition

Transmission loss of the transmitter output power level and the receiver input signal level through the duplexer.

9.4.2 Method of measurement

a) Connect the equipment as shown in figure 2a to the attenuator (4) in the circuit, if the input SWR of the selective measuring device (5) exceeds 1,2:1.

b) Connect point P1 to point P2. Adjust the frequency of the generator (1) to any one within the specified operating frequencies of the transmitting branch. Adjust the output of the generator (1) and the attenuation of the attenuator (2) to provide a signal level within the linear range of the selective measuring device (4). Record the level.

c) If required, repeat step b) at another specified operating frequency.

d) Connect point P1 to the transmitting terminal (Tx) and point P2 to the antenna terminal (Ant).

   While maintaining the output of the generator (1) established in step b), vary the frequency over the specified operating range of the transmitting branch. Record the level indicated by the selective measuring device (5) at each frequency.

e) Connect the equipment as illustrated in figure 2b; connect point P1 to point P2. Adjust the frequency of the generator (1) to any one within the specified operating frequencies of the receiving branch. Adjust the output of the generator (1) and the attenuation of the attenuator (2) to provide a signal level within the linear range of the selective measuring device (4). Record the level.

f) If required, repeat step e) at another specified operating frequency.

g) Connect point P1 to the antenna terminal (Ant) and point P2 to the receiving terminal (Rx).

   While maintaining the output of the generator (1) established in step e), vary the frequency over the specified operating range of the receiving branch. Record the level indicated by the selective measuring device (5) at each frequency.

9.4.3 Presentation of results

a) Calculate the ratio, in dB, of the recorded level in step b) of 9.4.2 to the recorded level in step d) of 9.4.2 and the ratio, in dB, of the recorded level in step e) of 9.4.2 to the recorded level in step g) of 9.4.2. Record this value, in dB.

b) Plot the ratio recorded in step a) on the linear ordinate of a graph versus the corresponding frequency on the linear abscissa.

c) The maximum ratio in the specified operating frequency range of both branches is referred to respectively as the insertion loss of the transmitting branch and the receiving branch.

9.5 Standing-wave ratio (SWR)

9.5.1 Definition

The ratio of the maximum to the minimum values of the voltage in the standing-wave pattern along a lossless transmission line with the transmitting or antenna terminal as a load, while the receiving and antenna terminal or the receiving and transmitting terminal are connected to the test load.

Copyright International Electrotechnical Commission
Provided by IHS under license with IEC
No reproduction or networking permitted without license from IHS Not for Resale

9.5.2 Method of measurement

a) Connect the equipment as illustrated in figure 3.

NOTE The SWR measuring device has a nominal impedance equal to that of the transmitting line and a residual SWR of not more than 1,05 below or equal to 500 MHz and not more than 1,10 above 500 MHz. This residual SWR should be measured with all connectors to be used – measurement included.

b) Connect point P1 to the transmitting terminal (Tx) and point P2 to the antenna terminal (Ant). Vary the frequency of the generator (1) over the specified operating frequency range of the transmitting branch. Record the SWR at each frequency, as read on the SWR measuring device (3).

c) Connect point P1 to the antenna terminal (Ant) and point P2 to the transmitting terminal (Tx). Vary the frequency of the generator (1) over the specified operating frequency range of the receiving branch. Record the SWR at each frequency, as read on the SWR measuring device (3).

9.5.3 Presentation of results

The maximum value recorded in step b) and c) of 9.5.2 is respectively referred to as SWR of the transmitting branch and the receiving branch.

9.6 Rating power

9.6.1 Definition

The permissible input power at the transmitting terminal of the duplexer under specified operating conditions.

9.6.2 Method of measurement

a) Connect the equipment as illustrated in figure 4. Connect point P1 to point P2.

b) Adjust the output of the generator (1) at the specified frequency to achieve the specified power as indicated by the power meter (5). Record the settings of the generator.

c) Switch off the output of the generator and connect point P1 to the transmitting terminal (Tx) and point P2 to the antenna terminal (Ant.).

d) Switch the generator (1) output on and restore the settings recorded in b). Record the SWR measuring device (3) reading.

e) Apply the power for a period of 4 h under specified temperature and humidity conditions. No damage or deformation shall be observed and the change in SWR from the value recorded in d) shall be less than 10 %.

9.6.3 Presentation of results

The result shall state the rating power, the test frequency and the environmental temperature and humidity.

9.7 Duplexer performance under conditions deviating from standard test conditions

If required, the performance of the duplexer should be evaluated under conditions deviating from standard test conditions.

The performance characteristics and the environmental conditions at which the measurements are to be made shall be those explicitly specified in the equipment specification.

The results obtained may be compared with those obtained under standard test conditions.

Copyright International Electrotechnical Commission
Provided by IHS under license with IEC
No reproduction or networking permitted without license from IHS Not for Resale

9.7.1 Initial measurements under standard test conditions

Before beginning the test described in the following subclause, the relevant performance characteristics must first be measured under standard test conditions in accordance with the methods specified in this section.

9.7.2 Variation of ambient temperature

9.7.2.1 Cold

The required characteristics shall be measured under the environment conditions specified in clause 28 of IEC 60489-1.

9.7.2.2 Dry heat

The required characteristics shall be measured under the environment conditions specified in clause 28 of IEC 60489-1.

9.7.2.3 Evaluation of frequency stability (temperature)

Measure the duplexer performance, for example, transmitter noise suppressionability, transmitter-to-receiver isolationability, insertion loss and SWR, versus frequency under standard test conditions, specified cold and dry heat, and more than specified frequency range.

Estimate the drift of the extreme frequencies corresponding to the satisfied requirement of performance, for example transmitter noise suppressionability, transmitter-to-receiver isolation-ability, insertion loss and SWR. It is expressed in 10^{-6}/°C. The maximum value is referred to as the frequency stability (temperature).

9.7.3 Variation of humidity

The required characteristics shall be measured under the environment conditions specified in clause 28 of IEC 60489-1.

9.7.4 Vibration

For equipment intended to have immunity to vibration, the required characteristics shall be measured after the vibration test has been performed in conformity with 30.1 of IEC 60489-1.

NOTE Duplexers intended to be used for transceivers operating under vibration conditions should be tested additionally under real conditions, i.e. forming a part of transceivers, when the quality of transmitted (received) information or signal-to-noise ratio on the transmission (reception) channel is estimated.

9.7.5 Shock

For equipment intended to have immunity to shock, the required characteristics shall be measured after the shock test has been performed in conformity with 30.2 of IEC 60489-1.

9.7.6 Dust and sand

For equipment intended to have immunity to dust and sand, the required characteristics shall be measured after the dust and sand test has been performed in conformity with 30.4 of IEC 60489-1.

9.7.7 Driving rain

For equipment intended to have immunity to driving rain, the required characteristics shall be measured after the driving rain test has been performed in conformity with 30.5 of IEC 60489-1.

Copyright International Electrotechnical Commission
Provided by IHS under license with IEC
No reproduction or networking permitted without license from IHS Not for Resale

9.7.8 Corrosion (salt fog)

For equipment intended to have immunity to corrosion (salt fog), the required characteristics shall be measured after the corrosion test has been performed in conformity with 30.6 of IEC 60489-1.

Add the following new section after Section two:

Section three – Vehicular antennas and conditions

10 Supplementary definitions and conditions

Definitions used in this standard generally conform with those given in IEC 60050(138).

In this section, as stated in Section one, clause 3, the term "antenna" will be used. This term is synonymous with "aerial" (see IEV 712-01-01).

10.1 Impedance of test equipment

The characteristic impedance of any transmission line connecting test equipment to the antenna shall be equal to the declared nominal impedance of the antenna.

10.2 Bandwidth

The extent of a continuous range of frequencies over which an antenna characteristic or performance parameter conforms to a specified value.

10.3 Polarization

The orientation of the electric vector of the wave radiated by the antenna.

10.4 Test environment

10.4.1 Standard test mounting

Two arrangements of standard test mounting (ground-plane test mounting and back-to-back test mounting), not taking into account the effects of mounting on a car, are shown in annex C.

10.4.2 Test vehicle

The test vehicle shall be a four-door passenger automobile of steel construction, not more than four years old, and in operating condition. It shall have the following approximate dimensions:

Overall size	Roof size	Wheel size
m	m	m
Height: 1,5 ± 0,25	Length: 1,5 ± 0,25	0,33 to 0,38
Length: 5 ± 0,75	Width: 1,25 ± 0,25	
Width: 1,5 ± 0,25		

--`,,,``,,`-`-`,,`,,`,`,,`---

Copyright International Electrotechnical Commission
Provided by IHS under license with IEC
No reproduction or networking permitted without license from IHS Not for Resale

10.5 Standard antenna

One type of standard antenna intended only for mounting on a standard ground plane or on a test vehicle, is shown in annex D.

Back-to-back antennas are under consideration.

10.6 Environmental conditions

Unless otherwise specified, measurement should be made at an environmental temperature of 0 °C to 30 °C, at humidity below the dew point.

10.7 Radiation pattern

For the purpose of this section, the radiation pattern is the graphical representation in dB of the relative strength of the field radiated from the antenna plotted against the angular distance from a given reference direction.

For measurements made on a vehicle, the front shall be designated as 0°.

Measurements will normally be made in the horizontal plane, but measurements at elevated angles may be required.

10.8 Relative antenna gain

In this section, the gain of an antenna cannot be referred to an absolute standard. Relative antenna gain is the gain of the antenna under test compared with that of the standard antenna having the same mounting.

10.9 Percentage coverage gain

The percentage coverage gain of an antenna in a given plane is the percentage of the total angular coverage for which the gain does not fall below that of a stated reference level by more than the specified amounts.

10.10 Shock stability

The ability of the antenna to maintain specified performance after being subjected to the specified shock test.

10.11 Vibration stability

The ability of the antenna to maintain its mechanical integrity while being vibrated, and specified electrical performance after completion of the test.

11 Standing-wave ratio (SWR)

11.1 Test conditions

The antenna under test, complete with its mounting arrangement, is to be attached to the standard test mounting (see 10.4). Adapters may be used to facilitate the mounting of the test antenna, provided that they do not alter the intended height by more than 2 mm. The test site is considered satisfactory if the change in the SWR reading is less than 10 % of the SWR when

--`,,,``,,-`-`,,`,,`,`,,`---
Copyright International Electrotechnical Commission
Provided by IHS under license with IEC
No reproduction or networking permitted without license from IHS Not for Resale

the antenna and the standard test mounting are moved in a horizontal direction a minimum of λ/2: on each of the four azimuths, 90° apart, or, if the measurement is made on the test vehicle, back and forth one wavelength, in at least two perpendicular directions.

NOTE Movement over a total distance of half a wavelength in every direction includes all the phase possibilities for the reflected signals.

11.2 SWR measurement procedure

The antenna under test with its mounting system (see annex C) shall be located in a space relatively free from reflections at the desired frequency, through a SWR measuring device, that has a nominal impedance equal to the nominal impedance of the transmission line and a residual SWR of not more than 1,05 below 500 MHz and 1,10 above 500 MHz. This residual SWR should be measured with all connectors to be used in the measurement included and with the line terminated in a matched load with a SWR of not more than 1,01. The measurement shall be made at each frequency of interest.

The SWR, as read on the measuring device, will be the SWR of the antenna under test at the selected frequency. If the r.f. loss in the line connecting the antenna to the measuring device exceeds 0,5 dB, the measured SWR values shall be properly corrected to take account of the line loss.

11.3 Presentation of results

At least the maximum (corrected) SWR for the frequencies of interest shall be provided, along with the nominal impedance of the measuring device.

When the test is mode on the test vehicle, its dimensions and the position of the antenna shall be indicated.

12 Radiation pattern

12.1 Test conditions

The antenna under test together with its mounting system shall be installed on a test range (see annex A)

where

– the antenna shall have the same polarization;

– the separation between the source antenna and the antenna under test shall be at least $2\left(L_1^2 + L_2^2\right) / \lambda$;

– where L_1 and L_2 are the maximum dimensions respectively of the source antenna and the antenna under test plus ground plane, and λ is the wavelength of the test frequency;

– the antenna under test shall be placed in an area where the field is substantially uniform. The field shall previously be probed by a half-wave dipole over the effective antenna volume of the antenna under test. If the field intensity variation exceeds 1,5 dB, the test site shall be considered unusable;

– the 0° reading shall be taken at the start and end of each pattern run. If the two readings differ by more than 0,5 dB, the run is void and must be retaken;

– the type and length of cable connecting the test antenna to the receiver shall be the same as for the standard antenna so that there is no difference in cable attenuation;

--`,,,`-`-`,,`,,`,`,,`---

Copyright International Electrotechnical Commission
Provided by IHS under license with IEC
No reproduction or networking permitted without license from IHS Not for Resale

– the output of the signal source shall be monitored to ensure that it remains constant during the test. The combined stability of all test equipment must be maintained within ±0,1 dB of gain and ±0,01 % of frequency;

– all controllable conditions shall be the same when running the test antenna and the standard antenna. The standard antenna run shall be made immediately following the test antenna run so that any changes in propagation characteristics are kept to a minimum.

12.2.1 Horizontal pattern

For horizontal pattern measurement, the vertical axis of the antenna in its normal operating position shall be the axis of rotation during the test.

12.2.2 Vertical pattern

For vertical pattern measurement, the vertical axis of the antenna in its normal operating position shall be perpendicular to the axis of rotation during the test.

Measurements shall be made in two orthogonal planes:

a) the plane through the normal fore and aft axis of the antenna;

b) the plane through the normal transverse axis of the antenna.

12.3 Measurement procedure

a) Mount the antenna under test in accordance with figure A.1 of annex A.

b) Terminate the antenna under test with a resistive load equal to its nominal impedance.

c) Connect an r.f. signal generator, adjusted to the test frequency, to the source antenna.

d) Measure the signal level received across the resistive load with a selective voltmeter.

e) Rotate the antenna under test through 360° about the axis and record the signal level as a function of angle of rotation.

f) Repeat steps c), d) and e) at each test frequency.

NOTE As the principle of reciprocity applies, it is permissible to connect the signal source to the antenna under test, and the terminating load and selective voltmeter to the source antenna. Where a stable self-contained signal source is available, this arrangement is preferable.

12.4 Presentation of results

The results for each test frequency should be plotted on a graph showing levels as a function of angle of rotation, expressed in decibels or voltage ratios relative to the maximum recorded value. All measured values to 20 dB below the maximum should be shown. The type of mounting and the test frequency shall be stated, and the orientation of the antenna shall be shown by diagram.

When the test is made on the test vehicle, its dimensions and the position of the antenna shall be indicated.

NOTE The frequency interval is essentially a matter of experience.

Copyright International Electrotechnical Commission
Provided by IHS under license with IEC
No reproduction or networking permitted without license from IHS Not for Resale

13 Relative antenna gain

13.1 Method of measurement

Relative antenna gain may be determined by measurement of the patterns of the standard antenna and the antenna under test at specified frequency(ies) following the procedure set forth in clause 12.

13.2 Method of calculation

The relative gain may be calculated from the horizontal pattern measurements.

The signal level shall be taken from the measured patterns for the antenna under test and the standard antenna for each of 36 points at 10° intervals.

Let the values be V_{an} and V_{sn} for the antenna under test and the standard antenna respectively. Then the gain is

$$G_a = 10 \log \frac{\sum_{1}^{36} V_{an}^2}{\sum_{1}^{36} V_{sn}^2}$$

13.3 Presentation of results

The relative gain of the antenna under test, for each frequency calculated, shall be recorded in decibels with respect to the standard antenna.

If the antenna under test is to be used over a range of frequencies, the stated gain shall be the minimum gain over that range. When the test is made on the test vehicle, its dimensions and the position of the antenna shall be indicated.

13.4 Percentage coverage gain

A minimum of 36 points spaced at 10° intervals are taken from the polar diagram, compared with same 36 points of an omnidirectional values by 3 dB, 6 dB, 9 dB, etc., and expressed as a percentage.

14 Antenna power rating

14.1 Test conditions

– A transmitter of sufficient power rating and frequency range shall be used for the test. The transmitter power must be maintained at the specified test level for the duration of the test.

– The power level shall be measured at the antenna terminals.

– The test shall be performed in a space relatively free from reflections.

Copyright International Electrotechnical Commission
Provided by IHS under license with IEC
No reproduction or networking permitted without license from IHS Not for Resale

14.2 Method of measurement

a) Connect a wattmeter including a directional coupler (see annex E) to the antenna terminals.

b) Connect the transmitter to the input port of the directional coupler.

c) Adjust the transmitter to provide output power at the specified frequency and note the forward and the reflected power.

d) Calculate the net power accepted by the antenna and adjust the transmitter output power level to deliver the specified power to the antenna. Maintain this power level for the duration of the test.

e) Observe that there is no damage, deformation or change in SWR.

14.2.1 Intermittent power rating

The antenna shall be subjected to 1 min transmission and 4 min off at rated power for 4 h. After completion of the 4 h period, there shall be three cycles of 5 min transmission and 15 min off at rated power.

14.2.2 Continuous power rating

The antenna shall be subjected to 4 h of continuous transmission at rated power.

14.3 Presentation of rating

The results shall state the power rating together with the test frequency and environmental temperature and humidity. Where the power rating is determined analytically, the method of analysis shall be shown.

15 Measurement of electrical performance parameter under adverse environmental conditions

Under consideration.

--`,,,``,,-`-`,,`,,`,`,,`---
Copyright International Electrotechnical Commission
Provided by IHS under license with IEC
No reproduction or networking permitted without license from IHS Not for Resale

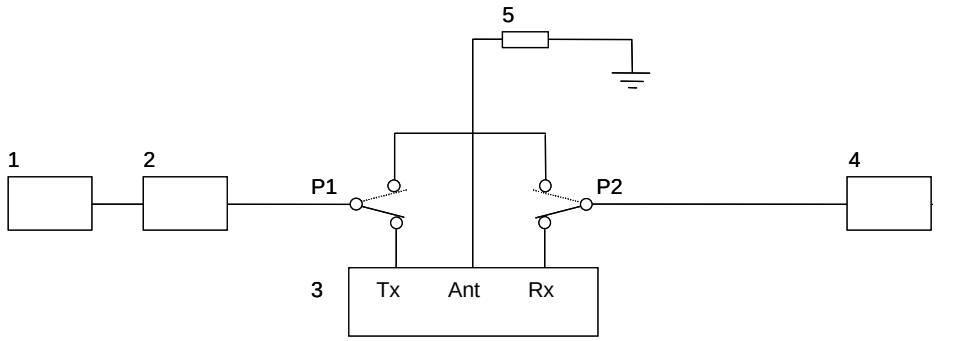

Key

1 RF signal generator (may be a tracking generator incorporated in the spectrum analyser)

2 Attenuator/isolator (if needed)

3 Duplexer under test

4 Selective measuring device (may be a spectrum analyser)

5 Test load

Figure 1 – Measuring arrangement for suppression and isolation ability of the duplexer

Copyright International Electrotechnical Commission
Provided by IHS under license with IEC
No reproduction or networking permitted without license from IHS Not for Resale

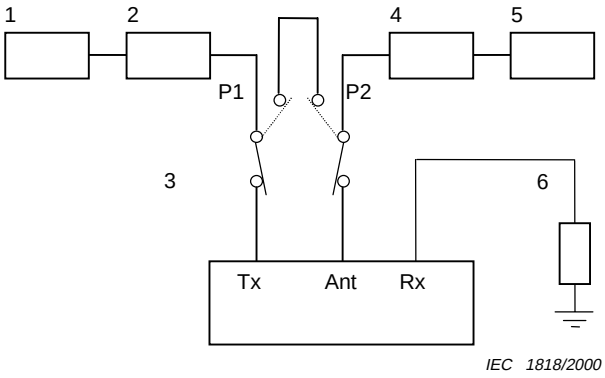

Figure 2a – Transmitting branch

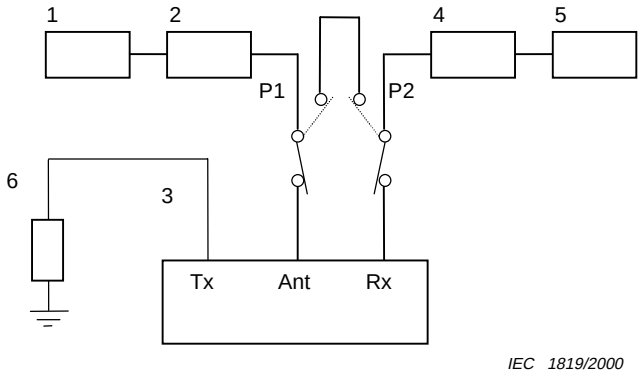

Figure 2b – Receiving branch

Key

1 RF signal generator (may be a tracking generator incorporated in the spectrum analyser)
2 Attenuator/isolator (if needed)
3 Duplexes under test
4 Attenuator (if needed)
5 Selective measuring device (may be a spectrum analyser)
6 Test load

Figure 2 – Measuring arrangement for insertion loss of the duplexer

Copyright International Electrotechnical Commission
Provided by IHS under license with IEC
No reproduction or networking permitted without license from IHS Not for Resale

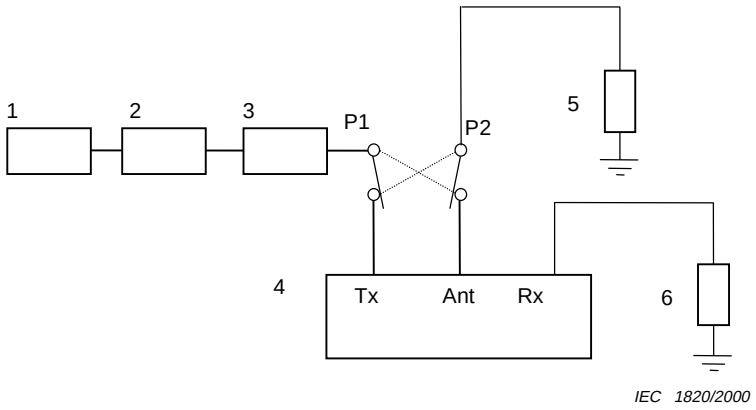

Key

1 RF signal generator
2 Attenuator/isolator (if needed)
3 SWR measuring device
4 Duplexer under test
5 Test load
6 Test load

Figure 3 – Measuring arrangement for SWR of the duplexer

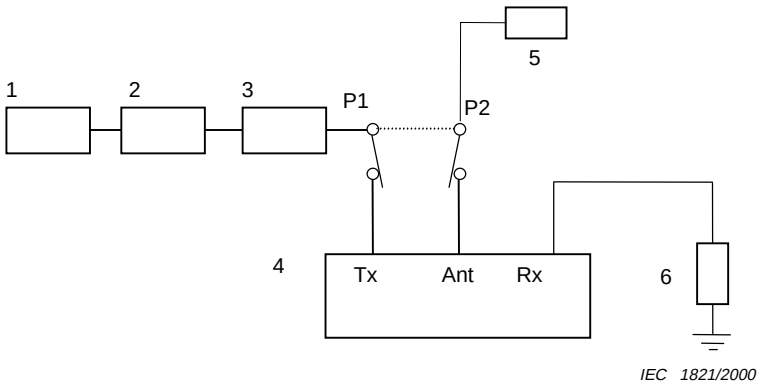

Key

1 RF signal generator
2 Attenuator/isolator (if needed)
3 SWR measuring device
4 Duplexer under test
5 Power meter
6 Test load

Figure 4 – Measuring arrangement for rating power

Copyright International Electrotechnical Commission
Provided by IHS under license with IEC
No reproduction or networking permitted without license from IHS Not for Resale

Page 27

Insert, after appendix B, the following new annexes C, D and E:

Annex C
(normative)

Antenna mounting

C.1 Ground-plane test mounting

The ground-plane test mounting consists of a horizontal, flat, circular, highly conductive sheet at a height of 2 ± 0,10 m and having the following dimensions:

Frequency	Diameter
MHz	m
30 < *f* < 100	6 ± 0,10
100 < *f* < 200	3 ± 0,05
200 < *f* < 1 000	1,5 ± 0,25

The thickness of the sheet shall not exceed 25 mm.

The antenna under test is to be mounted at the centre of the sheet within 75 mm.

C.2 Back-to-back test mounting

Two identical antennas of the type under test are horizontally mounted in a dipole configuration at a height of at least four wavelengths above ground and connected to a wideband balance to unbalance matching device (see figure C.1).

NOTE The ground plane is not intended to simulate an infinite ground plane but to be of standard size so that comparison can be made between antennas.

Copyright International Electrotechnical Commission
Provided by IHS under license with IEC
No reproduction or networking permitted without license from IHS Not for Resale

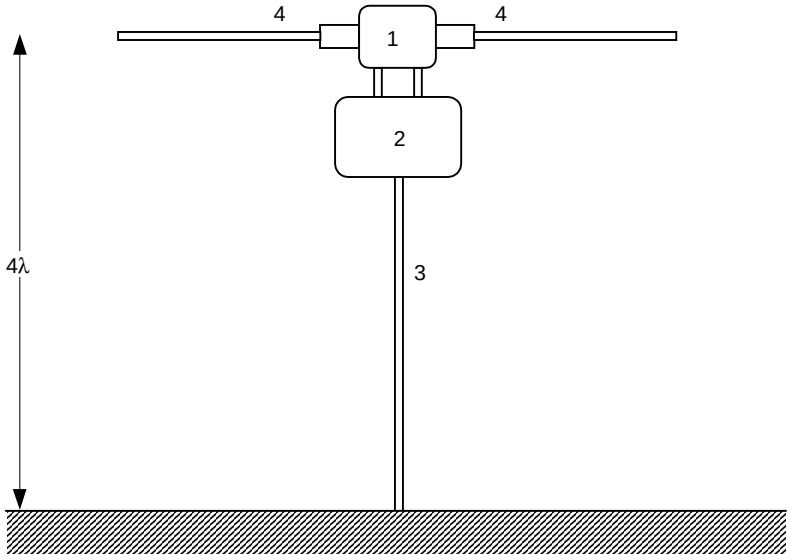

IEC 1822/2000

Key

1 Support for antennas
2 Wideband balance to unbalance matching device
3 Transmission line connecting to test equipment
4 Two identical antennas

Figure C.1 – Back-to-back test mounting

Copyright International Electrotechnical Commission
Provided by IHS under license with IEC
No reproduction or networking permitted without license from IHS Not for Resale

Annex D
(normative)

Standard antenna for mounting on a ground plane

One example of a standard antenna is shown in figure D.1. The standard antenna is to be mounted on a ground plane which consists of a flat, circular, highly conductive metallic sheet at a height of 2 m and having the following dimensions:

Frequency	Diameter
MHz	m
$30 < f < 100$	6 ± 0,10
$100 < f < 200$	3 ± 0,05
$200 < f < 1\ 000$	1,5 ± 0,25

The thickness of the mounting sheet shall not exceed 25 mm.

The standard antenna shall be mounted at the centre of the mounting sheet within 75 mm.

Several standard antennas are needed to cover the frequency range of 30 MHz to 1 000 MHz. A radiator length shall be chosen for each operating frequency according to figures D.2 to D.6.

When the standard antenna has been cut to the proper length and set up in accordance with this specification, the following factors shall be taken into account.

a) The efficiency is greater than 99 %.

b) The SWR of the standard antenna is better than 1,5, referred to 50 Ω. This corresponds to a mismatch loss not exceeding 0,18 dB.

c) The radiator length, according to the radiation pattern, is 0,25 wavelengths, with a tolerance of less than ±0,01 λ.

Copyright International Electrotechnical Commission
Provided by IHS under license with IEC
No reproduction or networking permitted without license from IHS Not for Resale

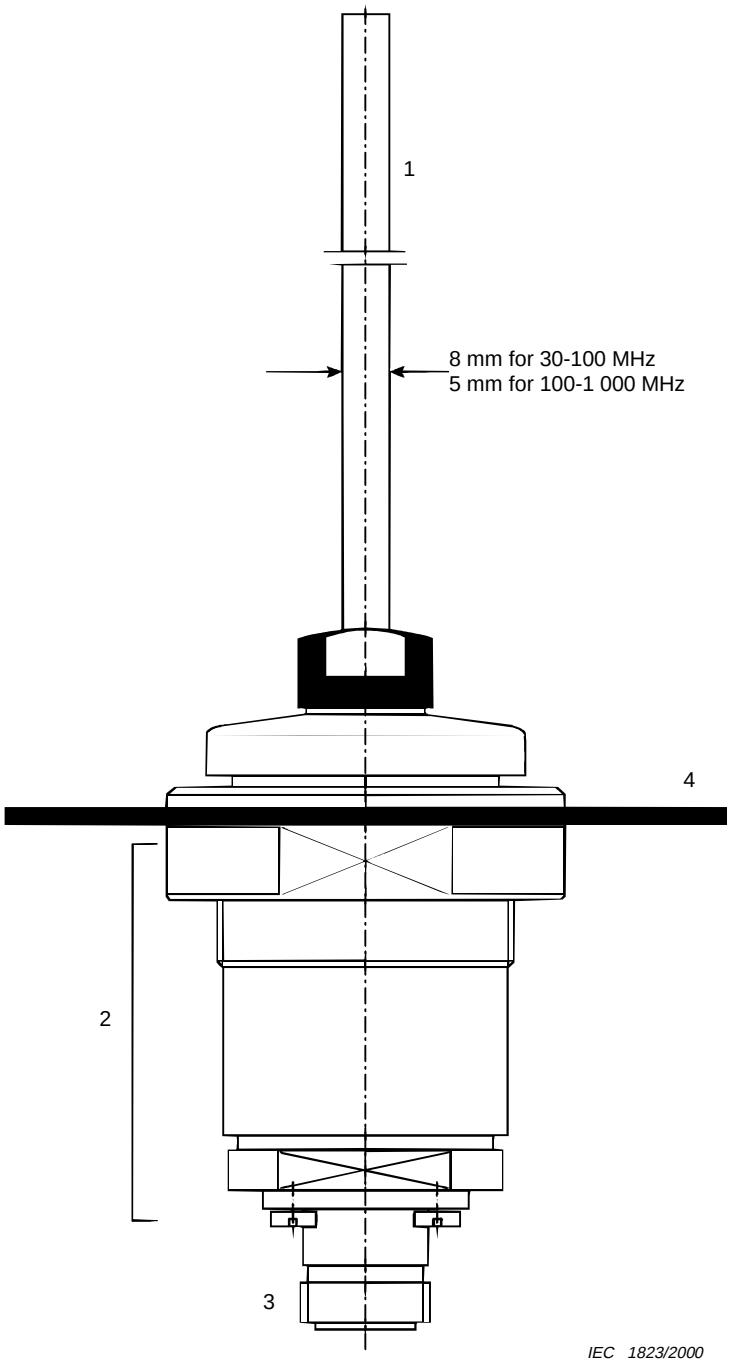

Key

1 Antenna element: diameter 8 mm for 30-100 MHz
5 mm for 100-1 000 MHz.

2 Reactive impedance transformer

3 50 Ω coaxial connector

4 Ground plane

Figure D.1 – An example of standard antenna

Copyright International Electrotechnical Commission
Provided by IHS under license with IEC
No reproduction or networking permitted without license from IHS Not for Resale

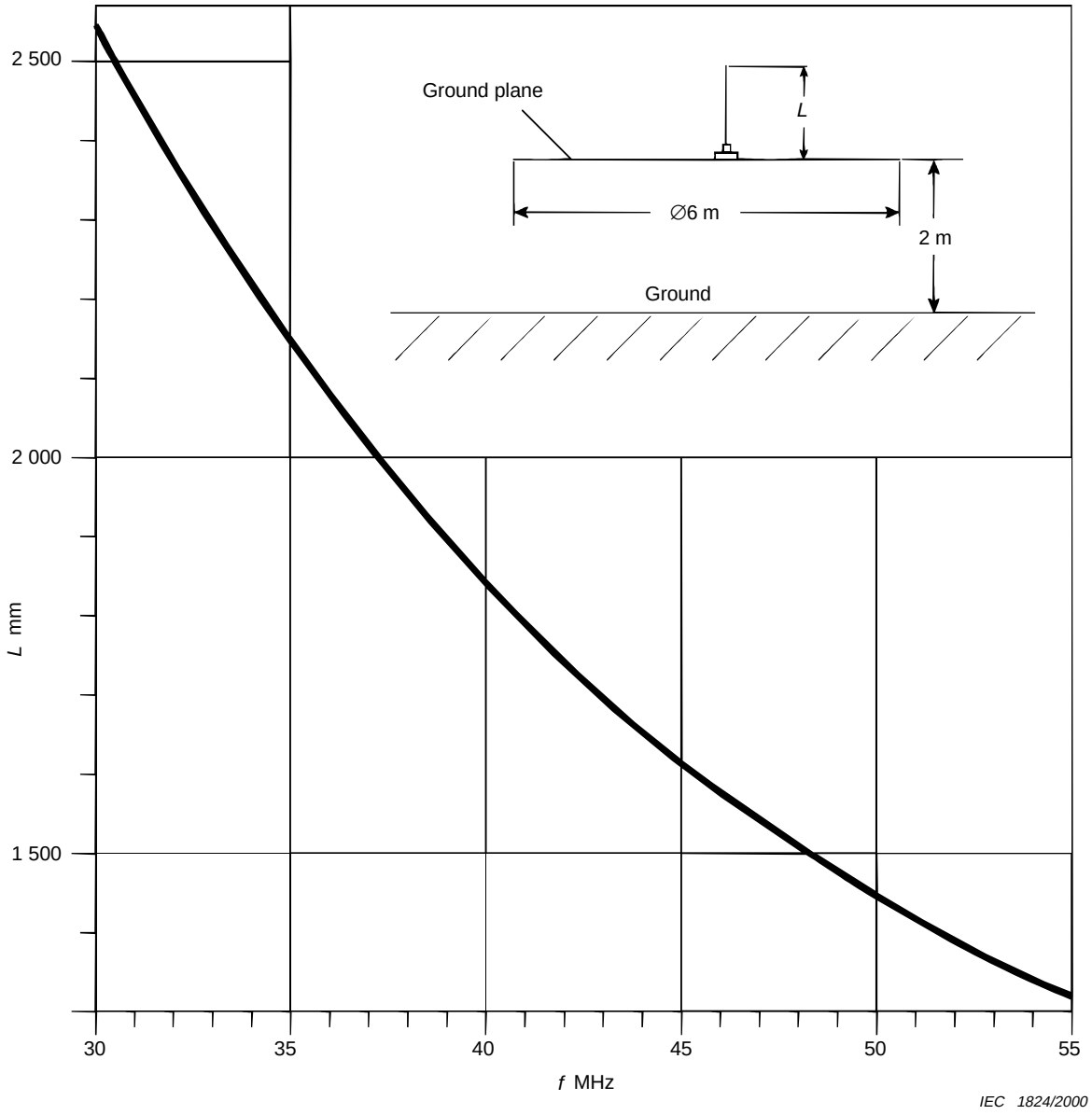

Figure D.2 – Antenna element length of standard antenna 30-55 MHz

--`,,,``,,-`-`,,`,,`,`,,`---
Copyright International Electrotechnical Commission
Provided by IHS under license with IEC
No reproduction or networking permitted without license from IHS
Not for Resale

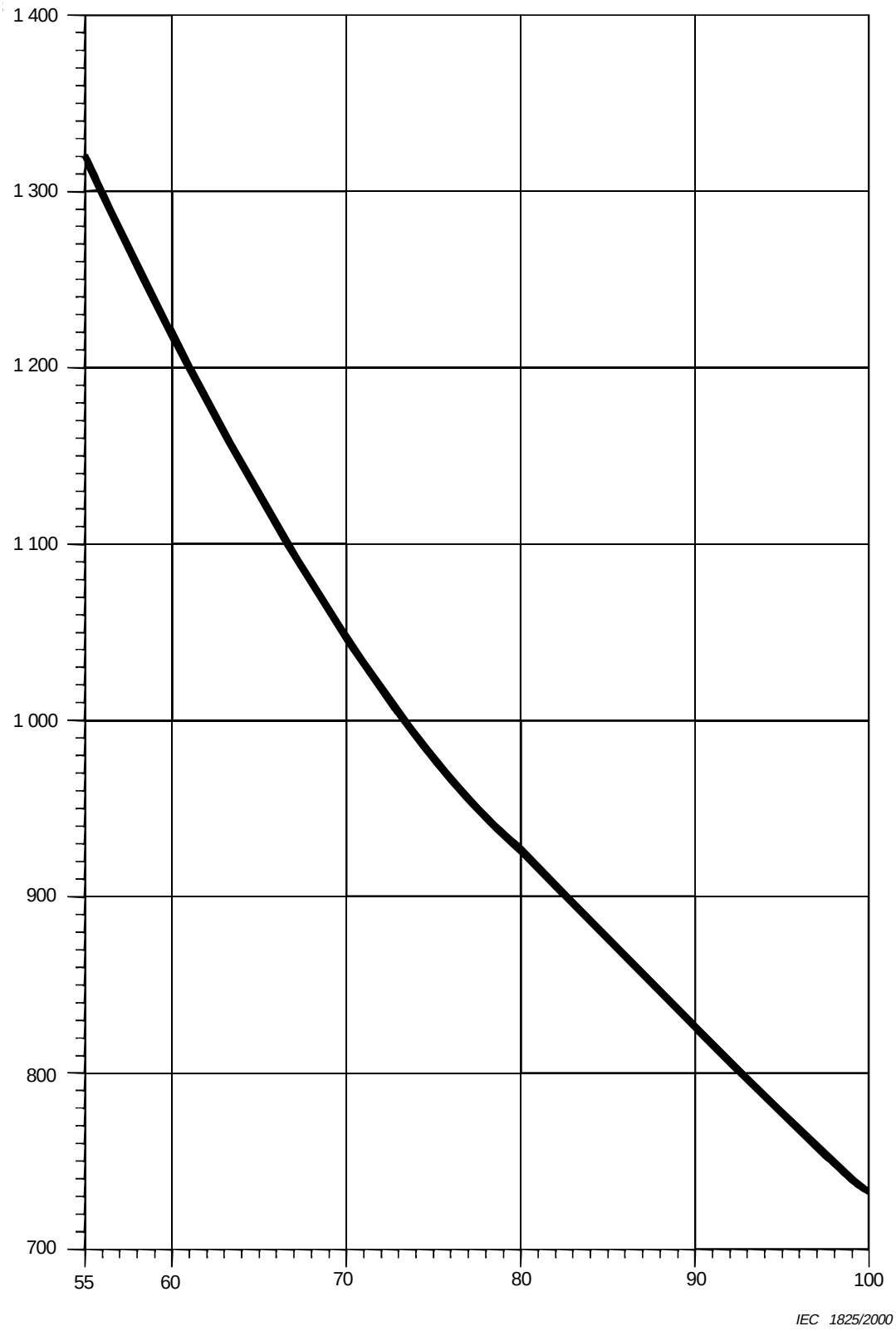

Figure D.3 – Antenna element length of standard antenna 55-100 MHz

--`,,,`,,`-`-`,,`,,`,`,,`---

Copyright International Electrotechnical Commission
Provided by IHS under license with IEC
No reproduction or networking permitted without license from IHS Not for Resale

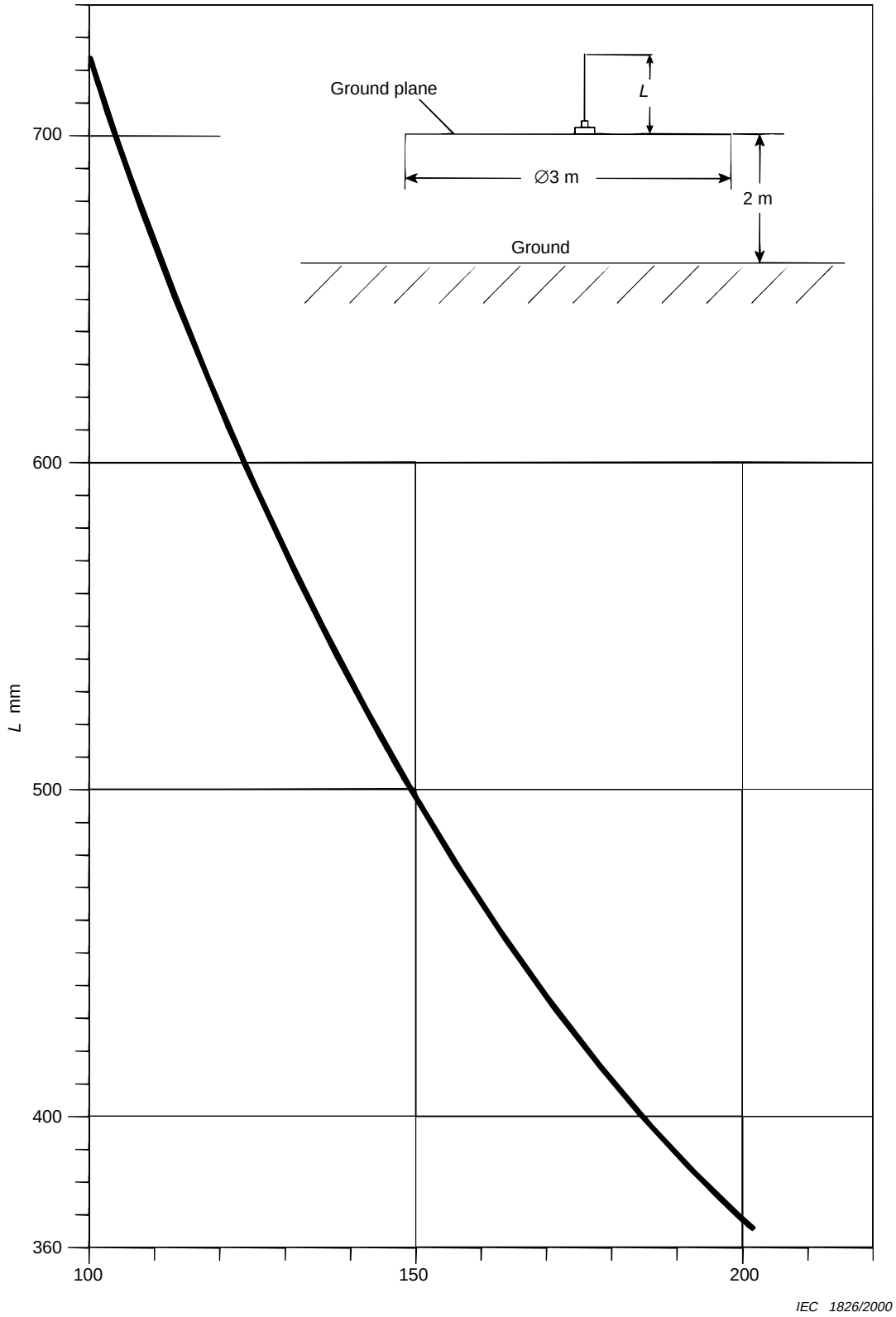

Figure D.4 – Antenna element length of standard antenna 100-200 MHz

--`,,,``,,-`-`,,`,,`,`,,`---

Copyright International Electrotechnical Commission
Provided by IHS under license with IEC
No reproduction or networking permitted without license from IHS Not for Resale

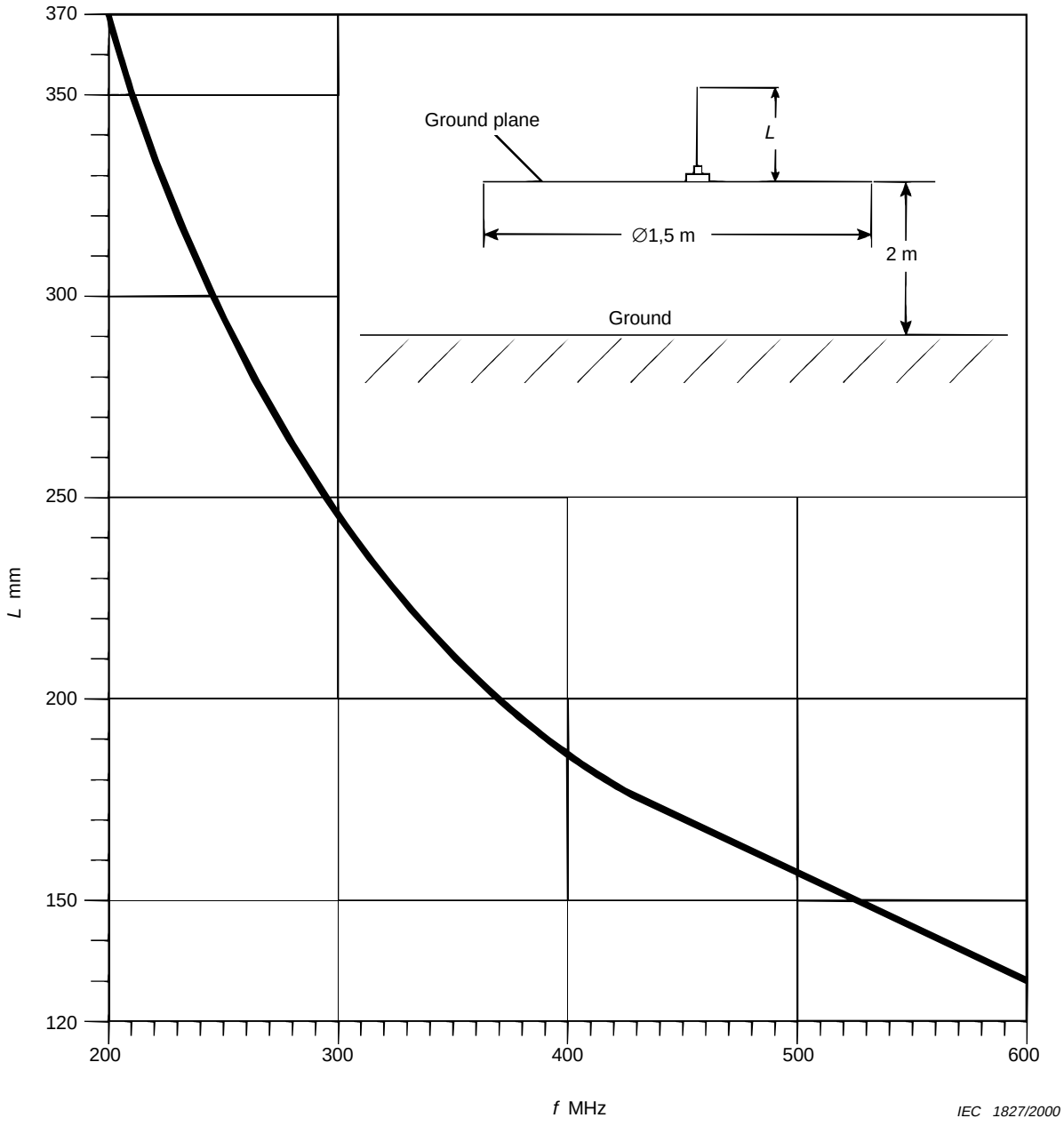

Figure D.5 – Antenna element length of standard antenna 200-600 MHz

Copyright International Electrotechnical Commission
Provided by IHS under license with IEC
No reproduction or networking permitted without license from IHS Not for Resale

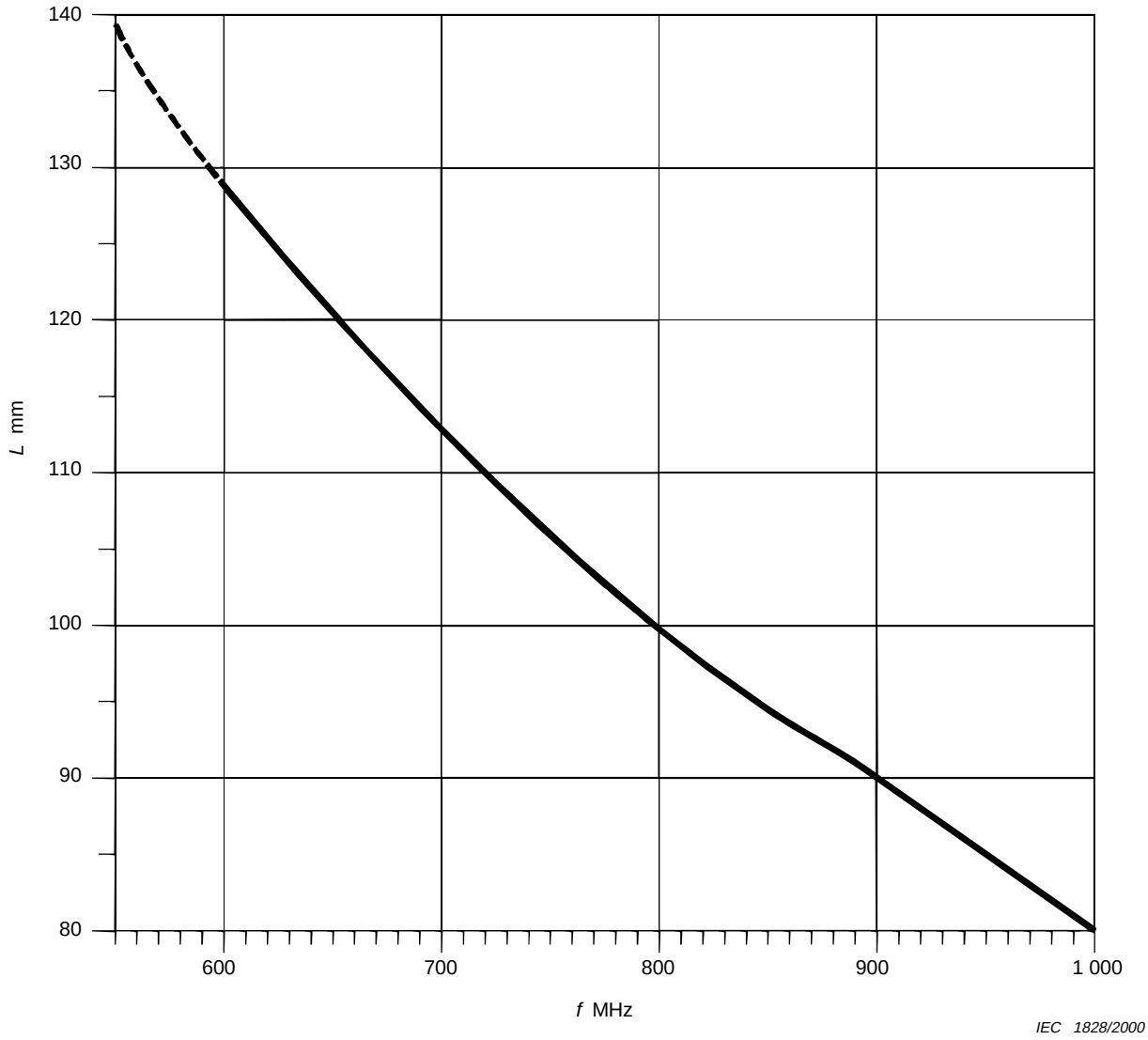

Figure D.6 – Antenna element length of standard antenna 600-1 000 MHz

Copyright International Electrotechnical Commission
Provided by IHS under license with IEC
No reproduction or networking permitted without license from IHS
Not for Resale

Annex E
(normative)

Requirements for test – Equipment in power rating measurement

Under consideration.

_____

Copyright International Electrotechnical Commission
Provided by IHS under license with IEC
No reproduction or networking permitted without license from IHS Not for Resale

ISBN 2-8318-5474-1



ICS 33.060.20; 33.120.40; 33.120.99

Typeset and printed by the IEC Central Office
GENEVA, SWITZERLAND

--`,,,``,-`-`,,`,,`,`,,`---

Copyright International Electrotechnical Commission
Provided by IHS under license with IEC
No reproduction or networking permitted without license from IHS

Not for Resale

NORME INTERNATIONALE

INTERNATIONAL STANDARD

CEI
IEC
60489-8

Première édition
First edition
1984-01

Méthodes de mesure applicables au matériel de radiocommunication utilisé dans les services mobiles

Huitième partie: Méthodes de mesure applicables aux antennes

Methods of measurement for radio equipment used in the mobile services

Part 8: Methods of measurement for antennas



Numéro de référence
Reference number
CEI/IEC 60489-8: 1984

Copyright International Electrotechnical Commission
Provided by IHS under license with IEC
No reproduction or networking permitted without license from IHS
Not for Resale

Numéros des publications

Depuis le 1er janvier 1997, les publications de la CEI sont numérotées à partir de 60000.

Publications consolidées

Les versions consolidées de certaines publications de la CEI incorporant les amendements sont disponibles. Par exemple, les numéros d'édition 1.0, 1.1 et 1.2 indiquent respectivement la publication de base, la publication de base incorporant l'amendement 1, et la publication de base incorporant les amendements 1 et 2.

Validité de la présente publication

Le contenu technique des publications de la CEI est constamment revu par la CEI afin qu'il reflète l'état actuel de la technique.

Des renseignements relatifs à la date de reconfirmation de la publication sont disponibles dans le Catalogue de la CEI.

Les renseignements relatifs à des questions à l'étude et des travaux en cours entrepris par le comité technique qui a établi cette publication, ainsi que la liste des publications établies, se trouvent dans les documents ci-dessous:

- **«Site web» de la CEI***
- **Catalogue des publications de la CEI**
  Publié annuellement et mis à jour régulièrement
  (Catalogue en ligne)*
- **Bulletin de la CEI**
  Disponible à la fois au «site web» de la CEI* et comme périodique imprimé

Terminologie, symboles graphiques et littéraux

En ce qui concerne la terminologie générale, le lecteur se reportera à la CEI 60050: *Vocabulaire Electrotechnique International* (VEI).

Pour les symboles graphiques, les symboles littéraux et les signes d'usage général approuvés par la CEI, le lecteur consultera la CEI 60027: *Symboles littéraux à utiliser en électrotechnique,* la CEI 60417: *Symboles graphiques utilisables sur le matériel. Index, relevé et compilation des feuilles individuelles,* et la CEI 60617: *Symboles graphiques pour schémas.*

* Voir adresse «site web» sur la page de titre.

Numbering

As from 1 January 1997 all IEC publications are issued with a designation in the 60000 series.

Consolidated publications

Consolidated versions of some IEC publications including amendments are available. For example, edition numbers 1.0, 1.1 and 1.2 refer, respectively, to the base publication, the base publication incorporating amendment 1 and the base publication incorporating amendments 1 and 2.

Validity of this publication

The technical content of IEC publications is kept under constant review by the IEC, thus ensuring that the content reflects current technology.

Information relating to the date of the reconfirmation of the publication is available in the IEC catalogue.

Information on the subjects under consideration and work in progress undertaken by the technical committee which has prepared this publication, as well as the list of publications issued, is to be found at the following IEC sources:

- **IEC web site***
- **Catalogue of IEC publications**
  Published yearly with regular updates
  (On-line catalogue)*
- **IEC Bulletin**
  Available both at the IEC web site* and as a printed periodical

Terminology, graphical and letter symbols

For general terminology, readers are referred to IEC 60050: *International Electrotechnical Vocabulary* (IEV).

For graphical symbols, and letter symbols and signs approved by the IEC for general use, readers are referred to publications IEC 60027: *Letter symbols to be used in electrical technology*, IEC 60417: *Graphical symbols for use on equipment. Index, survey and compilation of the single sheets* and IEC 60617: *Graphical symbols for diagrams.*

* See web site address on title page.

Copyright International Electrotechnical Commission
Provided by IHS under license with IEC
No reproduction or networking permitted without license from IHS
Not for Resale

NORME INTERNATIONALE

INTERNATIONAL STANDARD

CEI
IEC
60489-8

Première édition
First edition
1984-01

Méthodes de mesure applicables au matériel de radiocommunication utilisé dans les services mobiles

Huitième partie: Méthodes de mesure applicables aux antennes

Methods of measurement for radio equipment used in the mobile services

Part 8: Methods of measurement for antennas

© IEC 1984 Droits de reproduction réservés — Copyright - all rights reserved

Aucune partie de cette publication ne peut être reproduite ni utilisée sous quelque forme que ce soit et par aucun procédé, électronique ou mécanique, y compris la photocopie et les microfilms, sans l'accord écrit de l'éditeur.

No part of this publication may be reproduced or utilized in any form or by any means, electronic or mechanical, including photocopying and microfilm, without permission in writing from the publisher.

International Electrotechnical Commission 3, rue de Varembé Geneva, Switzerland
Telefax: +41 22 919 0300 e-mail: inmail@iec.ch IEC web site http: //www.iec.ch

Commission Electrotechnique Internationale
International Electrotechnical Commission
Международная Электротехническая Комиссия

CODE PRIX
PRICE CODE N

Pour prix, voir catalogue en vigueur
For price, see current catalogue

Copyright International Electrotechnical Commission
Provided by IHS under license with IEC
No reproduction or networking permitted without license from IHS

Not for Resale

SOMMAIRE

Pages

PRÉAMBULE 4
PRÉFACE 4

Articles

1. Domaine d'application 8
2. Objet 8

SECTION UN – DÉFINITIONS ET CONDITIONS GÉNÉRALES DE MESURE

3. Définitions 8
4. Conditions de mesure 12

SECTION DEUX – ANTENNES POUR BASE OU STATION FIXE

5. Généralités 12
6. Rapport d'ondes stationnaires (ROS), impédance, puissance et tension assignées à l'antenne 12
7. Mesure du diagramme de rayonnement 16
8. Gain 16

ANNEXE A — Détails d'une base d'essais 20
ANNEXE B — Détails d'une antenne étalonnée de substitution de 50 Ω 24

Copyright International Electrotechnical Commission
Provided by IHS under license with IEC
No reproduction or networking permitted without license from IHS

Not for Resale

CONTENTS

	Page
FOREWORD	5
PREFACE	5
Clause	
1. Scope	9
2. Object	9
SECTION ONE – DEFINITIONS AND GENERAL CONDITIONS OF MEASUREMENT	
3. Definitions	9
4. Conditions of measurement	13
SECTION TWO – BASE OR FIXED STATION ANTENNAS	
5. General	13
6. Standing-wave ratio (SWR), impedance and antenna power and voltage rating	13
7. Radiation pattern measurements	17
8. Gain	17
APPENDIX A — Details of a test range	21
APPENDIX B — Details of a 50 Ω transfer-standard antenna	25

Copyright International Electrotechnical Commission
Provided by IHS under license with IEC
No reproduction or networking permitted without license from IHS
Not for Resale

COMMISSION ÉLECTROTECHNIQUE INTERNATIONALE

MÉTHODES DE MESURE APPLICABLES AU MATÉRIEL DE RADIOCOMMUNICATION UTILISÉ DANS LES SERVICES MOBILES

Huitième partie: Méthodes de mesure applicables aux antennes

PRÉAMBULE

1) Les décisions ou accords officiels de la CEI en ce qui concerne les questions techniques, préparés par des Comités d'Etudes où sont représentés tous les Comités nationaux s'intéressant à ces questions, expriment dans la plus grande mesure possible un accord international sur les sujets examinés.

2) Ces décisions constituent des recommandations internationales et sont agréées comme telles par les Comités nationaux.

3) Dans le but d'encourager l'unification internationale, la CEI exprime le vœu que tous les Comités nationaux adoptent dans leurs règles nationales le texte de la recommandation de la CEI, dans la mesure où les conditions nationales le permettent. Toute divergence entre la recommandation de la CEI et la règle nationale correspondante doit, dans la mesure du possible, être indiquée en termes clairs dans cette dernière.

PRÉFACE

La présente norme a été établie par le Sous-Comité 12D: Antennes, du Comité d'Etudes nº 12 de la CEI: Radiocommunications.

Un projet de la section un, document 12D(Bureau Central)8, fut soumis à l'approbation des Comités nationaux suivant la Règle des Six Mois en décembre 1976. A la suite des observations reçues, le document 12D(Bureau Central)16 fut soumis à l'approbation des Comités nationaux suivant la Procédure des Deux Mois en avril 1978.

Un projet de la section deux, document 12D(Bureau Central)14, fut soumis à l'approbation des Comités nationaux suivant la Règle des Six Mois en juillet 1977.

Les Comités nationaux des pays suivants se sont prononcés explicitement en faveur de la publication:

Document 12D(Bureau Central)8: Section un

Afrique du Sud (République d')	Hongrie
Allemagne	Italie
Australie	Pays-Bas
Belgique	Pologne
Canada	Roumanie
Danemark	Royaume-Uni
Egypte	Suède
Espagne	Suisse
Etats-Unis d'Amérique	Turquie

Document 12D(Bureau Central)16: modifications à la section un

Afrique du Sud (République d')	Italie
Allemagne	Japon
Australie	Pays-Bas
Belgique	Pologne
Danemark	Royaume-Uni
Egypte	Suède
Espagne	Suisse
Etats-Unis d'Amérique	Turquie
France	

Copyright International Electrotechnical Commission
Provided by IHS under license with IEC
No reproduction or networking permitted without license from IHS
Not for Resale

INTERNATIONAL ELECTROTECHNICAL COMMISSION

METHODS OF MEASUREMENT FOR RADIO EQUIPMENT USED IN THE MOBILE SERVICES

Part 8: Methods of measurement for antennas

FOREWORD

1) The formal decisions or agreements of the IEC on technical matters, prepared by Technical Committees on which all the National Committees having a special interest therein are represented, express, as nearly as possible, an international consensus of opinion on the subjects dealt with.

2) They have the form of recommendations for international use and they are accepted by the National Committees in that sense.

3) In order to promote international unification, the IEC expresses the wish that all National Committees should adopt the text of the IEC recommendation for their national rules in so far as national conditions will permit. Any divergence between the IEC recommendation and the corresponding national rules should, as far as possible, be clearly indicated in the latter.

PREFACE

This standard has been prepared by Sub-Committee 12D: Aerials (Antennas), of IEC Technical Committee No. 12: Radiocommunications.

A draft of Section One, Document 12D(Central Office)8, was submitted to the National Committees for approval under the Six Months' Rule in December 1976. As a result of the observations received, a Document, 12D(Central Office)16, was submitted to the National Committees for approval under the Two Months' Procedure in April 1978.

A draft of Section Two, Document 12D(Central Office)14, was submitted to the National Committees for approval under the Six Months' Rule in July 1977.

The National Committees of the following countries voted explicitly in favour of publication:

Document 12D(Central Office)8: Section One

Australia
Belgium
Canada
Denmark
Egypt
Germany
Hungary
Italy
Netherlands
Poland
Romania
South Africa (Republic of)
Spain
Sweden
Switzerland
Turkey
United Kingdom
United States of America

Document 12D(Central Office)16: Amendments to Section One

Australia
Belgium
Denmark
Egypt
France
Germany
Italy
Japan
Netherlands
Poland
South Africa (Republic of)
Spain
Sweden
Switzerland
Turkey
United Kingdom
United States of America

Copyright International Electrotechnical Commission
Provided by IHS under license with IEC
No reproduction or networking permitted without license from IHS
Not for Resale

Document 12D(Bureau Central)14: Section deux

Afrique du Sud (République d')	Hongrie
Allemagne	Italie
Australie	Pays-Bas
Belgique	Roumanie
Danemark	Royaume-Uni
Egypte	Suède
Espagne	Suisse
Etats-Unis d'Amérique	Turquie
France	

Autres publications de la CEI citées dans la présente norme:

Publications n°s 50: Vocabulaire Electrotechnique International (VEI)

489-1: Méthodes de mesure applicables au matériel de radiocommunication utilisé dans les services mobiles. Première partie: Définitions générales et conditions normales de mesure.

Copyright International Electrotechnical Commission
Provided by IHS under license with IEC
No reproduction or networking permitted without license from IHS
Not for Resale

Document 12D(Central Office)14: Section Two

Australia
Belgium
Denmark
Egypt
France
Germany
Hungary
Italy
Netherlands
Romania
South Africa (Republic of)
Spain
Sweden
Switzerland
Turkey
United Kingdom
United States of America

Other IEC publications quoted in this standard:

Publications Nos. 50: International Electrotechnical Vocabulary (IEV)

489-1: Methods of Measurement for Radio Equipment Used in the Mobile Services, Part 1: General Definitions and Standard Conditions of Measurement.

Copyright International Electrotechnical Commission
Provided by IHS under license with IEC
No reproduction or networking permitted without license from IHS
Not for Resale

MÉTHODES DE MESURE APPLICABLES AU MATÉRIEL DE RADIOCOMMUNICATION UTILISÉ DANS LES SERVICES MOBILES

Huitième partie: Méthodes de mesure applicables aux antennes

---

1. Domaine d'application

Cette norme s'applique aux antennes d'émission et de réception utilisées dans les services mobiles.

Elle est destinée à être utilisée avec la Publication 489-1 de la CEI: Première partie: Définitions générales et conditions normales de mesure. Les termes et définitions supplémentaires et les conditions de mesure qui figurent dans cette norme sont destinés aux essais de type, mais peuvent aussi être employés pour les essais de réception.

2. Objet

L'objet de cette norme est de spécifier les termes et les conditions de mesure employés pour évaluer le fonctionnement des antennes visées par le domaine d'application de cette norme et de rendre possible une comparaison des résultats de mesures effectuées par des différents observateurs et par des différents appareils.

SECTION UN — DÉFINITIONS ET CONDITIONS GÉNÉRALES DE MESURE

3. Définitions

Les définitions employées dans cette norme sont en général conformes à celles données dans le Vocabulaire Electrotechnique International (VEI) et dans les autres publications de la CEI relatives aux antennes. Lorsqu'une antenne n'est pas définie dans cette norme, la définition est celle du VEI; s'il y a contradiction, la définition donnée ici est préférée.

Des termes additionnels seront donnés dans les sections concernant les mesures.

3.1 *Antenne*

Dans cette norme, une antenne est définie comme un appareil pour le couplage d'une ligne de transmission à l'espace en vue de rayonner ou de capter des ondes électromagnétiques. Elle comprend tous les dispositifs adaptateurs d'impédance, symétriseurs, déphaseurs ou autres jusqu'au point de connexion de la ligne de transmission.

3.2 *Antenne pour station fixe*

Antenne conçue en vue d'être employée dans une station fixe.

3.3 *Antenne doublet demi-onde*

Antenne doublet dont la longueur électrique est une demi-longueur d'onde.

Copyright International Electrotechnical Commission
Provided by IHS under license with IEC
No reproduction or networking permitted without license from IHS Not for Resale

METHODS OF MEASUREMENT FOR RADIO EQUIPMENT USED IN THE MOBILE SERVICES

Part 8: Methods of measurement for antennas

---

1. Scope

This standard applies specifically to antennas used for transmitting and receiving in the mobile services.

This standard is intended to be used in conjunction with IEC Publication 489-1: Part 1: General Definitions and Standard Conditions of Measurement. The supplementary terms and definitions and the conditions of measurement set forth in this standard are intended for type tests and may be used also for acceptance tests.

2. Object

The object of this standard is to define terms and conditions of measurement used to ascertain the performance of antennas within the scope of this standard and to make possible a comparison of the results of measurements made by different observers on different equipment.

SECTION ONE — DEFINITIONS AND GENERAL CONDITIONS OF MEASUREMENT

3. Definitions

Definitions used in this standard generally conform to those given in the International Electrotechnical Vocabulary (IEV) and in other IEC publications on antennas. Where a term is not defined in this standard, the definition is that given in the IEV; in case of conflict, the definition given herein takes precedence.

Additional terms will be found in the measurement sections.

3.1 *Antenna*

For the purpose of this standard, an antenna is defined as a device for coupling a transmission line to space for the purpose of radiating or receiving electromagnetic waves. It includes any matching, balancing, phasing or other coupling devices up to the point of connection of the transmission line.

3.2 *Base station or fixed station antenna*

An antenna intended to be used at a base station or fixed station.

3.3 *Half-wave dipole antenna*

A dipole whose electrical length is half a wavelength.

Copyright International Electrotechnical Commission
Provided by IHS under license with IEC
No reproduction or networking permitted without license from IHS Not for Resale

3.4 *Antenne omnidirectionnelle*

Antenne directive en élévation mais dont le champ rayonné est sensiblement constant dans le plan horizontal.

3.5 *Antenne source*

Antenne qui illumine de façon convenable l'antenne à l'essai selon des conditions spécifiées.

3.6 *Antenne étalonnée de substitution*

Antenne de référence dont la structure est reproductible avec suffisamment de précision. Son gain et sa directivité peuvent être déterminés par des calculs et, si nécessaire, confirmés par des mesures. Elle est employée dans les mesures de gain d'une antenne (voir annexe B, figure B1, page 26).

3.7 *Tension assignée à l'antenne*

Valeur maximale instantanée de la tension qui peut être appliquée de façon répétitive aux bornes de l'antenne sans aucune dégradation dans son fonctionnement.

3.8 *Emplacement d'essais de l'antenne*

En général, le voisinage immédiat de l'antenne à l'essai.

3.9 *Base d'essais de l'antenne*

L'espace contenant l'antenne source, l'antenne à l'essai et leurs équipements pour les mesures de gain et de diagrammes de rayonnement (voir annexe A, figure A1, page 22).

3.10 *Gain de l'antenne*

Quotient de la puissance rayonnée par une antenne dans une direction spécifiée par la puissance rayonnée maximale par un doublet demi-onde de référence, sans pertes avec la même puissance d'entrée.

3.11 *Tenue en puissance de l'antenne*

Valeur maximale de puissance en onde continue appliquée à l'antenne pendant une durée et sous des conditions spécifiées, sans que son fonctionnement soit dégradé.

3.12 *Volume effectif de l'antenne*

Volume contenant l'antenne plus une demi-longueur d'onde autour de l'antenne, en considérant toutes les positions appropriées de l'antenne à l'essai.

3.13 *Impédance nominale*

Impédance purement résistive spécifiée comme référence pour la mesure du coefficient de réflexion aux bornes de l'antenne.

3.14 *Charge due au vent*

Résultante des forces dues à la pression du vent sur l'antenne et sur les supports.

3.15 *Charge due au givre*

Charge supplémentaire exercée par le givre sur l'antenne et sur les supports.

Copyright International Electrotechnical Commission
Provided by IHS under license with IEC
No reproduction or networking permitted without license from IHS Not for Resale

3.4 *Omnidirectional antenna*

An antenna having an essentially non-directional pattern in azimuth and a directional pattern in elevation.

3.5 *Source antenna*

An antenna which properly illuminates the antenna under test within specified conditions.

3.6 *Transfer-standard antenna*

A reference antenna of closely reproducible specified construction. Its gain and directivity can be calculated and, when necessary, confirmed by measurement. It is used for making antenna gain measurements (see Appendix B, Figure B1, page 26).

3.7 *Antenna voltage rating*

The maximum instantaneous peak voltage which may be applied repetitively to the antenna feed point without degrading its performance.

3.8 *Antenna test site*

The general vicinity of the antenna under test.

3.9 *Antenna test range*

The space enclosing the source antenna, the antenna under test, and their equipment for gain and radiation pattern measurement (see Appendix A, Figure A1, page 22).

3.10 *Antenna gain*

The ratio of the power radiated by the antenna in a stated direction to the maximum radiated power of a lossless half-wave reference dipole with identical power input.

3.11 *Antenna power rating*

The maximum continuous r.f. power which can be applied to the antenna continuously for a specified period of time under specified conditions without degrading its performance.

3.12 *Effective antenna volume*

The actual volume containing the antenna plus one-half wavelength all around the antenna, taking into account all appropriate positions of the antenna under test.

3.13 *Nominal impedance*

The resistive impedance specified as the reference for reflection coefficient measurement at the antenna terminals.

3.14 *Wind loading*

The sum of the forces caused by wind pressure on the antenna and its supporting structure.

3.15 *Ice loading*

The additional loading on the antenna and supporting structure due to ice.

Copyright International Electrotechnical Commission
Provided by IHS under license with IEC
No reproduction or networking permitted without license from IHS Not for Resale

4. Conditions de mesure

4.1 *Mesure sur modèles à échelle réduite*

Dans les bandes de fréquence inférieures il est difficile d'obtenir des résultats précis dans la mesure du diagramme de rayonnement et du gain sur une antenne de dimensions réelles. Par conséquent, on peut employer des techniques de modèles à échelle réduite.

4.2 *Précision linéaire*

Le modèle à échelle réduite doit être construit avec la précision minimale suivante:

$$L_s = LR \pm 0{,}01\ LR$$

où:
R est le rapport d'échelle
L_s est toute dimension linéaire significative du modèle à échelle réduite
L est la dimension linéaire considérée de l'antenne grandeur nature

4.3 *Structure de support*

Lorsque le support de l'antenne ou le sol influencent les caractéristiques électriques de l'antenne, on doit en tenir compte dans la mesure du possible.

4.4 *Matériaux*

Les parties du modèle à échelle réduite doivent être construites avec des matériaux qui simulent les caractéristiques électriques des parties correspondantes de l'antenne grandeur nature.

Note. — Bien que cela ne soit pas strictement conforme aux techniques des modèles à échelle réduite, les erreurs introduites sont assez petites pour que la précision de la mesure ne soit pas sensiblement diminuée, pourvu que le rapport d'échelle ne soit pas trop grand.

SECTION DEUX — ANTENNES POUR BASE OU STATION FIXE

5. Généralités

Dans cette section, on ne considère que les antennes à polarisation rectiligne utilisées entre 25 MHz et 1 GHz.

Les méthodes d'essais pour les antennes à polarisation circulaire, pour les antennes actives ainsi que pour les antennes fonctionnant en dessous de 25 MHz sont à l'étude.

Sauf indications contraires, les mesures décrites dans cette section doivent être effectuées sur une base d'essais appropriée (voir annexe A).

La terminologie employée est en général conforme à celle du Vocabulaire Electrotechnique International (VEI) et aux autres publications de la CEI relatives aux antennes. On trouvera d'autres définitions dans la section un de cette partie.

6. Rapport d'ondes stationnaires (ROS), impédance, puissance et tension assignées à l'antenne

6.1 *Conditions de mesure*

L'antenne à l'essai doit être disposée dans un site relativement dépourvu de réflexions et suffisamment loin des appareils de mesure et du personnel. On considère que le site est satisfaisant si la

Copyright International Electrotechnical Commission
Provided by IHS under license with IEC
No reproduction or networking permitted without license from IHS Not for Resale

4. Conditions of measurement

4.1 *Scale model measurements*

In the lower frequency bands accurate results of measurements of radiation pattern and gain are difficult to obtain on a full-size antenna. Therefore, scale model techniques may be used.

4.2 *Linear accuracy*

The scale model shall be constructed to at least the following accuracy:

$$L_s = LR \pm 0.01\ LR$$

where:

R is the scale ratio
L_s is any significant linear dimension of the scale model, and
L is the corresponding linear dimension of the full-size antenna

4.3 *Supporting structure*

When the antenna supporting structure or the presence of ground will affect the electrical characteristics of the antenna, it also shall be taken into account where possible.

4.4 *Materials*

The parts of the scale model shall be constructed of materials which simulate the electrical characteristics of the corresponding parts of the full-size antenna.

Note. — Although this is not in strict conformance with scale model techniques, the errors introduced are small enough that the accuracy of the measurement will not be impaired noticeably, provided that the scaling factor is not too large.

SECTION TWO — BASE OR FIXED STATION ANTENNAS

5. General

This section deals only with linearly polarized antennas for use in the frequency range 25 MHz to 1 GHz.

Tests for circularly polarized antennas, for active antennas and for frequencies below 25 MHz are under consideration.

Unless otherwise specified, the measurements detailed in this section shall be conducted on an appropriate test range (see Appendix A).

Terminology used generally conforms to that in the International Electrotechnical Vocabulary (IEV) and in other IEC publications on antennas. Other definitions will be found in Section One of this part.

6. Standing-wave ratio (SWR), impedance and antenna power and voltage rating

6.1 *Test conditions*

The antenna under test shall be located in a space relatively free from reflections and sufficiently far from the test equipment and personnel. The test site is considered satisfactory if the change in

Copyright International Electrotechnical Commission
Provided by IHS under license with IEC
No reproduction or networking permitted without license from IHS Not for Resale

variation dans l'indication du ROS est inférieure à 10% lorsque l'antenne est déplacée horizontalement d'au moins une demi-longueur d'onde pour chacun des huit azimuts, séparés de 45°, et verticalement de plus ou moins une demi-longueur d'onde.

Pour certaines applications particulières, comme les antennes verticales à montage latéral, le support se trouve dans le champ de l'antenne. Dans ce cas, le support doit être compris dans le montage de l'antenne à l'essai.

6.2 *Mesure du ROS*

L'antenne à l'essai doit être reliée à un générateur convenablement adapté à la fréquence d'essai au moyen d'un appareil pour la mesure du ROS ayant une impédance nominale égale à celle de la ligne de transmission et un ROS résiduel inférieur à 1,05 en dessous de 500 MHz et inférieur à 1,10 au-dessus. Ce ROS résiduel doit être déterminé avec tous les connecteurs qui sont employés dans la mesure et avec la ligne de transmission terminée par une charge adaptée dont le ROS est inférieur à 1,01. La mesure est effectuée à chaque fréquence requise.

Le ROS indiqué par l'instrument de mesure est le ROS de l'antenne à l'essai à la fréquence choisie. Si les pertes dans la ligne reliant l'antenne à l'appareil de mesure dépassent 0,5 dB, les valeurs de ROS doivent être convenablement corrigées pour en tenir compte.

6.2.1 *Présentation des résultats*

On indiquera au moins, pour toute fréquence requise, le maximum du ROS (corrigé) et l'impédance nominale de l'appareil de mesure.

6.3 *Mesure de l'impédance*

L'impédance de l'antenne peut être mesurée à l'aide d'un pont d'impédance ou d'un autre appareil approprié à la fréquence spécifiée.

6.3.1 *Présentation des résultats*

L'impédance mesurée sera donnée sous la forme $R \pm jX$, à la fréquence f MHz, ou graphiquement.

6.4 *Essai à la puissance assignée*

La puissance assignée peut être vérifiée soit par le calcul soit par des mesures.

L'antenne à l'essai doit être reliée à un générateur par l'intermédiaire d'un appareil pour la mesure du ROS. La puissance assignée sera appliquée pendant 4 h à la fréquence et aux conditions de température et d'humidité spécifiées. On ne doit observer ni détériorations, ni déformations, ni variations du ROS de plus de 10%.

6.4.1 *Présentation des résultats*

Les résultats doivent faire état de la fréquence de mesure, des conditions de température et d'humidité, conjointement à la puissance assignée. Lorsque celle-ci est établie par le calcul, cette méthode doit être mentionnée.

6.5 *Epreuve à la tension assignée*

Un signal de fréquence et de tension de crête spécifiées est appliqué à l'antenne à l'essai au moins 10 fois de façon quasi ininterrompue pendant une période de cinq minutes. Un appareil d'indication approprié doit être employé pour indiquer s'il ne se produit pas de claquage ou d'amorçage d'arc. La puissance moyenne appliquée ne doit pas dépasser la puissance assignée.

Copyright International Electrotechnical Commission
Provided by IHS under license with IEC
No reproduction or networking permitted without license from IHS Not for Resale

SWR is less than 10% when the antenna is moved in a horizontal direction a minimum of $\lambda/2$ on each of eight azimuth directions, 45° apart, and up and down + or − $\lambda/2$.

For certain applications, such as side-mounted vertical antennas, the supporting structure is in the r.f. field. In this case, the supporting structure shall be included in the mounting of the antenna under test.

6.2 *SWR measurement procedure*

The antenna under test shall be connected to a suitably matched signal source at the desired frequency, through a SWR measuring device, that has a nominal impedance equal to that of the transmission line and a residual SWR of not more than 1.05 below 500 MHz and 1.10 above 500 MHz. This residual SWR should be measured with all connectors to be used in the measurement included and with the line terminated in a matched load with a SWR of not more than 1.01. The measurement shall be made at each frequency of interest.

The SWR, as read on the measuring device, will be the SWR of the antenna under test at the selected frequency. If the r.f. loss in the line connecting the antenna to the measuring device exceeds 0.5 dB, the measured SWR values shall be properly corrected to take account of the line loss.

6.2.1 *Presentation of results*

At least the maximum (corrected) SWR for each frequency of interest shall be provided, together with the nominal impedance of the measuring device.

6.3 *Impedance measurement procedure*

The antenna impedance may be measured with a r.f. impedance bridge or other suitable device at the specified frequency.

6.3.1 *Presentation of results*

Measured impedance shall be stated in the form $R \pm jX$ at frequency f MHz, or graphically.

6.4 *Power rating test procedure*

The stated power rating may be proven either by an analytical method or by physical measurements.

The antenna under test shall be connected to a r.f. signal source through a SWR measuring device, and a specified power at the specified frequency shall be applied for a period of 4 h, under specified temperature and humidity conditions. No damage or deformation shall be observed; the change in SWR shall be less than 10%.

6.4.1 *Presentation of results*

The results shall state the power rating, the test frequency and the environmental temperature and humidity. Where the power rating is determined analytically, the method of analysis shall be shown.

6.5 *Voltage rating test procedure*

A r.f. signal of specified frequency and peak voltage shall be applied almost continuously, at least 10 times to the antenna under test during a period of five minutes. A suitable indicating device shall be provided to show whether a breakdown or a flashover has occurred. The average power applied shall not exceed the rated power.

Copyright International Electrotechnical Commission
Provided by IHS under license with IEC
No reproduction or networking permitted without license from IHS Not for Resale

7. Mesure du diagramme de rayonnement

7.1 *Généralités*

En vertu du principe de réciprocité, on obtient les mêmes résultats de mesure en employant l'antenne source en émission et l'antenne à l'essai en réception ainsi qu'en employant l'antenne source en réception et l'antenne à l'essai en émission. Par commodité, on suppose que l'antenne source est en émission.

On peut mesurer le diagramme de rayonnement soit dans le plan horizontal, soit dans le plan vertical.

7.2 *Conditions de mesure*

L'antenne à l'essai munie de son système de fixation doit être placée sur une base de mesure, voir annexe A, dans les conditions suivantes:

a) les deux antennes ont la même polarisation;

b) la distance entre l'antenne source et l'antenne à l'essai ne doit pas être inférieure à 10 longueurs d'onde, ni à:

$$\frac{2\,L^2}{\lambda}$$

en désignant par L la plus grande dimension de l'antenne à l'essai et par λ la longueur d'onde du signal d'essai, en mètres, et

c) l'antenne à l'essai doit être installée dans un site où la valeur du champ est sensiblement constante. Cette uniformité sera auparavant vérifiée au moyen d'un doublet demi-onde dans le volume effectif de l'antenne à l'essai. Si les variations de la valeur du champ dépassent 1,5 dB, la base d'essai ne devra pas être employée.

7.3 *Méthode de mesure*

1. Disposer l'antenne à l'essai conformément à la figure A1 de l'annexe A, page 22.
2. Charger l'antenne avec une résistance égale à l'impédance nominale.
3. Relier à l'antenne source un générateur de signaux réglé sur la fréquence d'essai.
4. Mesurer avec un voltmètre sélectif le niveau de signal reçu aux bornes de la résistance de charge.
5. Tourner l'antenne à l'essai de 360° autour de l'axe (voir figure A1 de l'annexe A) et enregistrer le niveau de signal en fonction de l'angle de rotation.
6. Répéter les opérations 3, 4 et 5 pour chaque fréquence d'essai.
7. Répéter les opérations 1 à 6 pour chaque plan présentant de l'intérêt.

7.4 *Présentation des résultats*

Les résultats obtenus pour chaque fréquence d'essai doivent être portés sur un diagramme indiquant, en fonction de l'angle de rotation, les niveaux du signal reçu exprimés en décibels ou en rapports de tension. Les niveaux sont rapportés à la valeur maximale enregistrée. La dynamique de mesure doit être au moins de 20 dB au-dessous de la valeur maximale.

La fréquence d'essai et la polarisation doivent être aussi indiquées et l'orientation de l'antenne doit être repérée par un schéma.

8. Gain

Sauf spécifications contraires, la «direction spécifiée» (paragraphe 3.10) pour le gain est dans le plan horizontal.

Copyright International Electrotechnical Commission
Provided by IHS under license with IEC
No reproduction or networking permitted without license from IHS Not for Resale

7. Radiation pattern measurements

7.1 *General*

By the principle of reciprocity, test results obtained with the source antenna transmitting and the antenna under test receiving are the same as those obtained with the source antenna receiving and the antenna under test transmitting. For convenience, it will be assumed that the source antenna is the transmitting antenna.

The radiation pattern for either the horizontal plane or the vertical plane may be measured.

7.2 *Test conditions*

The antenna under test together with its mounting system shall be installed on a test range (see Appendix A), where:

a) both antennas have the same polarization;

b) the separation between the source antenna and the antenna under test shall be at least 10 wavelengths, or

$$\frac{2L^2}{\lambda}$$

where L is the maximum dimension of the antenna under test and λ is the wavelength of the test frequency in metres, whichever is greater, and

c) the antenna under test shall be placed in an area where the field is substantially uniform. The field shall previously be probed by a half-wave dipole over the effective antenna volume of the antenna under test. If the field-intensity variation exceeds 1.5 dB, the test site shall be considered unusable.

7.3 *Measurement procedure*

1. Mount the antenna under test in accordance with Figure A1 of Appendix A, page 22.
2. Terminate the antenna under test with a resistive load equal to its nominal impedance.
3. Connect a r.f. signal generator, adjusted to the test frequency, to the source antenna.
4. Measure the signal level received across the resistive load with a selective voltmeter.
5. Rotate the antenna under test through 360° around the axis (shown in Figure A1, of Appendix A) and record the signal level as a function of angle of rotation.
6. Repeat steps 3, 4 and 5 at each test frequency.
7. Repeat steps 1 to 6 for each plane of interest.

7.4 *Presentation of results*

The results for each test frequency should be plotted on a graph showing levels as a function of angle of rotation, expressed in decibels or voltage ratios relative to the maximum recorded value. All measured values to 20 dB below the maximum should be shown.

Test frequency and polarization shall be stated and the orientation of the antenna shall be shown by a diagram.

8. Gain

Unless otherwise specified, the "stated direction" (Sub-clause 3.10) of gain is in the horizontal plane.

Copyright International Electrotechnical Commission
Provided by IHS under license with IEC
No reproduction or networking permitted without license from IHS Not for Resale

8.1 *Conditions d'essai*

Les conditions d'essai sont celles du paragraphe 7.2.

8.2 *Méthode de mesure*

1. Disposer l'antenne à l'essai conformément à la figure A1 de l'annexe A, page 22.
2. Charger l'antenne avec une résistance égale à l'impédance nominale.
3. Relier à l'antenne source un générateur de signaux réglé sur la fréquence d'essai.
4. Mesurer avec un voltmètre sélectif le niveau de signal reçu aux bornes de la résistance de charge.
5. Tourner l'antenne à l'essai de 360° autour de l'axe (voir figure A1 de l'annexe A) et enregistrer le niveau de signal en fonction de l'angle de rotation.
6. Tourner l'antenne jusqu'à la direction du maximum de niveau de signal (V_a).
7. Remplacer l'antenne à l'essai par une antenne étalonnée de substitution, couvrant la ou les fréquences d'essai et répéter l'opération 6 pour obtenir le niveau maximal. Augmenter l'affaiblissement pour changer le niveau jusqu'à la valeur V_a. L'atténuation A_D est relevée. (Voir l'annexe B qui donne un exemple d'antenne étalonnée de substitution.)
8. Répéter la mesure pour chaque fréquence d'essai.

8.3 *Calcul des résultats*

Le gain de l'antenne est:

$$G_a = A_D + G_s$$

où:

on indique par A_D l'atténuation (opération 7, paragraphe 8.2) et par G_s le gain de l'antenne étalonnée de substitution; tous ces paramètres sont exprimés en décibels.

Note. — Correction de circularité

Si l'antenne à l'essai est conçue pour être omnidirectionnelle dans le plan horizontal, on doit appliquer une correction pour tenir compte de la différence de gain en azimut et pour obtenir G_0, qui est le gain moyen en décibels de l'antenne à l'essai pour tous les azimuts par rapport à un doublet demi-onde sans pertes.

8.4 *Présentation des résultats*

a) Le gain de l'antenne à l'essai, par rapport au doublet demi-onde, doit être exprimé en fonction de la fréquence, soit sous forme de tableau, soit sous forme de graphique. On doit indiquer toute valeur mesurée dans le domaine de fréquence de l'antenne soumise aux mesures. L'orientation de l'antenne étalonnée de substitution et de l'antenne à l'essai doit être aussi indiquée.

b) Lorsque la direction voulue de rayonnement de l'antenne à l'essai est différente de celle du rayonnement maximal à cause d'une inclinaison du rayonnement en élévation, on inscrit G_b à la place de G_a.

c) Lorsque le gain de l'antenne à l'essai varie avec la direction horizontale, on inscrit G_0 à la place de G_a.

Note. — Correction de l'inclinaison

Si la direction de rayonnement maximal prévue pour l'antenne à l'essai diffère en élévation de la direction horizontale, le gain corrigé G_0 doit être encore corrigé pour obtenir:

$$G_b = G_0 + L_b$$

où l'on indique par L_b la différence de gain, en décibels, due à l'angle d'inclinaison. La valeur de L_b peut être déduite du diagramme de rayonnement vertical de l'antenne.

Copyright International Electrotechnical Commission
Provided by IHS under license with IEC
No reproduction or networking permitted without license from IHS Not for Resale

8.1 *Test conditions*

The test conditions are as set forth in Sub-clause 7.2.

8.2 *Method of measurement*

1. Mount the antenna under test in accordance with Figure A1 of Appendix A, page 22.
2. Terminate the antenna under test with a resistive load equal to its nominal impedance.
3. Connect a r.f. signal generator, adjusted to the test frequency, to the source antenna.
4. Measure the signal level received across the resistive load with a selective voltmeter.
5. Rotate the antenna under test through 360° around the axis (shown in Figure A1 of Appendix A) and record the signal level as a function of angle of rotation.
6. Rotate the antenna to the direction of signal maximum (V_a).
7. Replace the antenna under test by a transfer standard antenna covering the frequency or frequencies of interest and repeat step 6 for maximum level. Add attenuation to change reading of level to the value V_a. Note the attenuation A_D. (See Appendix B for an example of a 50 Ω transfer standard antenna.)
8. Repeat the measurement for each frequency of interest.

8.3 *Calculation of results*

The gain of the antenna is:

$$G_a = A_D + G_s$$

where:

A_D is the attenuation (step 7, Sub-clause 8.2) and G_s is the gain of the transfer standard antenna; all the figures are expressed in decibels.

Note. — Circularity correction

If the antenna is intended for omnidirectional coverage in the horizontal plane, the measured gain shall be corrected to take into account the angular variations of gain and to give G_0, which is the average antenna gain in decibels in azimuth with reference to a lossless half-wave dipole.

8.4 *Presentation of results*

a) The gain of the antenna under test, with reference to a lossless half-wave dipole, shall be stated as a function of frequency in either tabular or graphical form. All measured values across the frequency range of the antenna under test shall be shown. Orientation of the transfer-standard antenna and the antenna under test shall be stated.

b) Where the intended direction of radiation from the antenna under test differs from the direction of maximum radiation due to beamtilt, the measured gain G_a shall be replaced by G_b.

c) Where the antenna under test has an irregular azimuth pattern, the value of G_a shall be replaced by G_0.

Note. — Beamtilt correction

If the intended direction of maximum radiation from the antenna under test differs from the horizontal direction due to the beamtilt, then the corrected gain G_0 shall be further corrected to give

$$G_b = G_0 + L_b$$

where L_b is the increase in gain due to the intended beamtilt and G_b is the gain in the intended direction. The value L_b can be obtained from the vertical radiation pattern of the antenna.

Copyright International Electrotechnical Commission
Provided by IHS under license with IEC
No reproduction or networking permitted without license from IHS Not for Resale

ANNEXE A

DÉTAILS D'UNE BASE D'ESSAIS

La disposition typique pour la mesure du diagramme de rayonnement est donnée sur la figure A1, page 22. Il y a trois types de dispositions possibles:

Disposition basse (au niveau du sol)

Les deux antennes sont près du sol. Les hauteurs de l'antenne source et de l'antenne à l'essai, h_s et h_a (figure A1), sont ajustées de façon que le champ résultant de l'antenne source et de son image soit suffisamment uniforme sur l'antenne à l'essai.

Disposition haute

Les deux antennes sont assez élevées pour placer un minimum du diagramme de rayonnement de l'antenne source au point de réflexion. Les axes des lobes principaux des deux antennes sont alignés. Les deux hauteurs, h_a et h_s (figure A1), sont en général égales.

Disposition oblique

L'antenne source est placée près du sol, et l'antenne à l'essai est élevée. L'angle α (figure A1) est de l'ordre de quelques dizaines de degrés.

Copyright International Electrotechnical Commission
Provided by IHS under license with IEC
No reproduction or networking permitted without license from IHS Not for Resale

APPENDIX A

DETAILS OF A TEST RANGE

A typical arrangement for radiation pattern measurement is shown in Figure A1, page 22. Three possible types of test range are described as follows:

Ground-level range

A ground-level range is a range where both antennas are close to the ground. The source and test antenna heights, h_s and h_a in Figure A1, are adjusted in order that the resultant field of the source antenna and its image be substantially uniform at the test antenna.

Elevated range

An elevated range is a range where both the antenna under test and the source antenna are elevated sufficiently to place a minimum lobe of the source antenna pattern at the reflection point, while simultaneously aligning the main lobe axes of both antennas. The two heights, h_a and h_s in Figure A1, are generally equal.

Slant range

A slant range is a range where the source antenna is placed near the ground and the antenna under test is placed at an elevated point. The angle α in Figure A1 is in the order of tens of degrees.

Copyright International Electrotechnical Commission
Provided by IHS under license with IEC
No reproduction or networking permitted without license from IHS Not for Resale

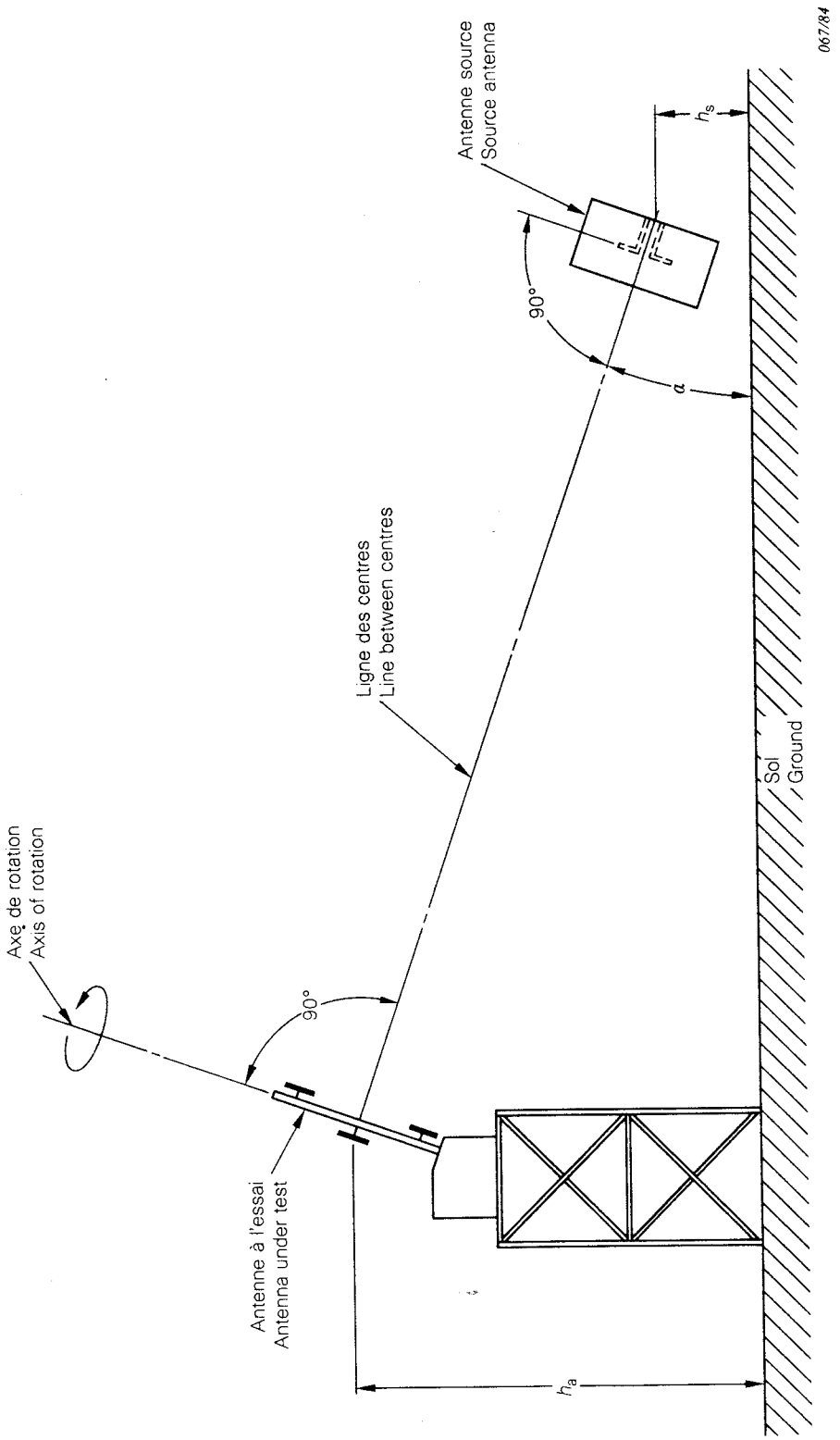

FIG. A1. — Base d'essais.
Test range.

Copyright International Electrotechnical Commission
Provided by IHS under license with IEC
No reproduction or networking permitted without license from IHS

Not for Resale

— Page blanche —
— Blank page —

Copyright International Electrotechnical Commission
Provided by IHS under license with IEC
No reproduction or networking permitted without license from IHS Not for Resale

ANNEXE B

DÉTAILS D'UNE ANTENNE ÉTALONNÉE DE SUBSTITUTION DE 50 Ω

Pour la mesure du gain de l'antenne, on emploie une antenne étalonnée de substitution. La structure d'une telle antenne est indiquée à la figure B1, page 26. Elle est constituée de deux doublets demi-onde parallèles, reliés en parallèle par deux sections symétriques de ligne symétrique ouverte, comme indiqué. La distance entre les doublets est d'une demi-longueur d'onde. Ils sont placés à une hauteur d'un quart de longueur d'onde au-dessus d'un plan conducteur de masse de section carrée, dont le côté vaut une longueur d'onde. On utilisera une antenne étalonnée de substitution pour chacune des gammes de fréquences indiquées au tableau I, où figurent les dimensions de ces antennes.

Les gains de ces antennes étalonnées de substitution, déterminés par des mesures, sont indiqués au tableau II.

Copyright International Electrotechnical Commission
Provided by IHS under license with IEC
No reproduction or networking permitted without license from IHS Not for Resale

APPENDIX B

DETAILS OF A 50 Ω TRANSFER-STANDARD ANTENNA

A transfer-standard antenna is used for the measurement of antenna gain. The configuration of such an antenna is shown in Figure B1, page 26. It consists of two parallel half-wave dipoles connected in parallel by two symmetrical sections of balanced open-wire lines as shown. The dipoles are spaced one-half wavelength apart and are located one-quarter wavelength away from a conducting ground screen which is one wavelength by one wavelength in size. There shall be one transfer-standard antenna for each of the bands noted. Table I gives the dimensions for each antenna.

The gains of these transfer-standard antennas, as determined by measurements, are given in Table II.

Copyright International Electrotechnical Commission
Provided by IHS under license with IEC
No reproduction or networking permitted without license from IHS Not for Resale

Copyright International Electrotechnical Commission
Provided by IHS under license with IEC
No reproduction or networking permitted without license from IHS
Not for Resale

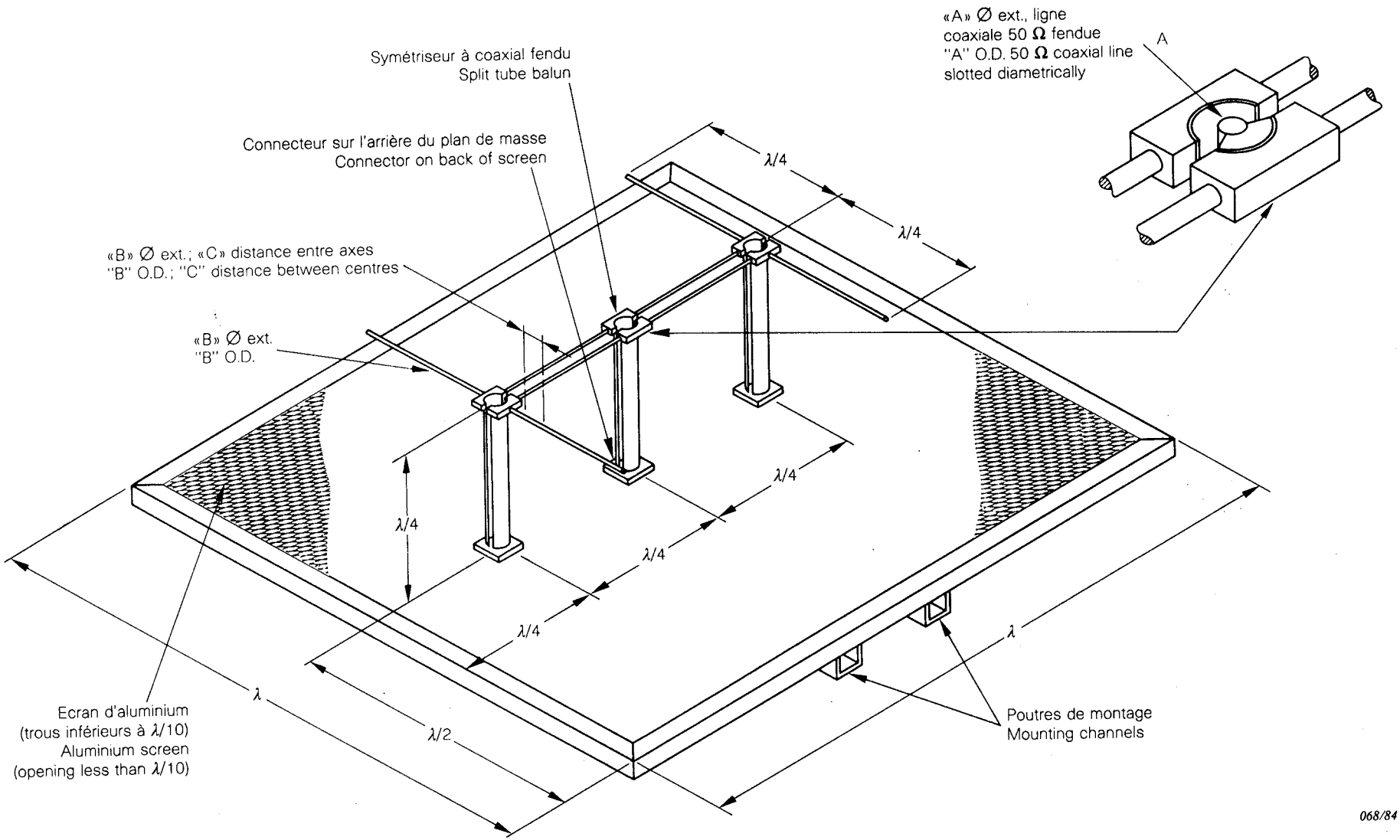

FIG. B1. — Antenne étalonnée de substitution.
Transfer-standard antenna.

Note. — λ est la longueur d'onde correspondant à la fréquence centrale des bandes considérées (160 MHz, 428 MHz, 481 MHz et 882 MHz). Pour les dimensions de A, B et C, voir le tableau I.

Note. — λ is the wavelength of a centre frequency of a given band, namely 160 MHz, 428 MHz, 481 MHz and 882 MHz. For dimensions A, B and C, see Table I.

TABLEAU I – TABLE I

Bande Band (MHz)	λ	A	B	C
148-174	1,875 m	4,11 cm	1,745 cm	3,838 cm
406-450	0,701 m	2,21 cm	0,792 cm	1,745 cm
450-512	0,622 m	2,21 cm	0,792 cm	1,745 cm
800-960	0,343 m	0,79 cm	0,475 cm	1,044 cm

TABLEAU II – TABLE II

Bande Band (MHz)	Fréquence Frequency (MHz)	Gain (dB(d))
148-174	148 160 174	7,5 7,7 8,0
406-450	406 428 450	7,6 7,7 7,9
450-512	450 481 512	7,5 7,7 7,9
800-960	800 882 960	7,5 7,7 8,0

Copyright International Electrotechnical Commission
Provided by IHS under license with IEC
No reproduction or networking permitted without license from IHS
Not for Resale

--`,,,``,,-`-`,,`,,`,`,,`---

Copyright International Electrotechnical Commission
Provided by IHS under license with IEC
No reproduction or networking permitted without license from IHS

Not for Resale

Copyright International Electrotechnical Commission
Provided by IHS under license with IEC
No reproduction or networking permitted without license from IHS
Not for Resale

ICS 33.120.40

Typeset and printed by the IEC Central Office
GENEVA, SWITZERLAND

Copyright International Electrotechnical Commission
Provided by IHS under license with IEC
No reproduction or networking permitted without license from IHS

Not for Resale