INTERNATIONAL STANDARD

IEC 60489-6

Third edition
1999-07

Radio equipment used in mobile services – Methods of measurement –

Part 6: Data equipment

Matériel de radiocommunication utilisé dans les services mobiles – Méthodes de mesure –

Partie 6:
Matériel numérique



Reference number
IEC 60489-6:1999(E)

Copyright International Electrotechnical Commission
Provided by IHS under license with IEC
No reproduction or networking permitted without license from IHS
Not for Resale

Numbering

As from 1 January 1997 all IEC publications are issued with a designation in the 60000 series.

Consolidated publications

Consolidated versions of some IEC publications including amendments are available. For example, edition numbers 1.0, 1.1 and 1.2 refer, respectively, to the base publication, the base publication incorporating amendment 1 and the base publication incorporating amendments 1 and 2.

Validity of this publication

The technical content of IEC publications is kept under constant review by the IEC, thus ensuring that the content reflects current technology.

Information relating to the date of the reconfirmation of the publication is available in the IEC catalogue.

Information on the subjects under consideration and work in progress undertaken by the technical committee which has prepared this publication, as well as the list of publications issued, is to be found at the following IEC sources:

- **IEC web site***
- **Catalogue of IEC publications**
  Published yearly with regular updates
  (On-line catalogue)*
- **IEC Bulletin**
  Available both at the IEC web site* and as a printed periodical

Terminology, graphical and letter symbols

For general terminology, readers are referred to IEC 60050: *International Electrotechnical Vocabulary* (IEV).

For graphical symbols, and letter symbols and signs approved by the IEC for general use, readers are referred to publications IEC 60027: *Letter symbols to be used in electrical technology*, IEC 60417: *Graphical symbols for use on equipment. Index, survey and compilation of the single sheets* and IEC 60617: *Graphical symbols for diagrams.*

* See web site address on title page.

--`,,`,,`-`-`,,`,,`,`,,`---

Copyright International Electrotechnical Commission
Provided by IHS under license with IEC
No reproduction or networking permitted without license from IHS Not for Resale

INTERNATIONAL STANDARD

IEC 60489-6

Third edition
1999-07

Radio equipment used in mobile services – Methods of measurement –

Part 6: Data equipment

Matériel de radiocommunication utilisé dans les services mobiles – Méthodes de mesure –

Partie 6:
Matériel numérique

© IEC 1999 — Copyright - all rights reserved

No part of this publication may be reproduced or utilized in any form or by any means, electronic or mechanical, including photocopying and microfilm, without permission in writing from the publisher.

International Electrotechnical Commission 3, rue de Varembé Geneva, Switzerland
Telefax: +41 22 919 0300 e-mail: inmail@iec.ch IEC web site http://www.iec.ch

Commission Electrotechnique Internationale
International Electrotechnical Commission
Международная Электротехническая Комиссия

PRICE CODE XB

For price, see current catalogue

--`,,`,,`-`-`,,`,,`,`,,`---

Copyright International Electrotechnical Commission
Provided by IHS under license with IEC
No reproduction or networking permitted without license from IHS Not for Resale

CONTENTS

Page

FOREWORD 4

Clause

1 General 5
1.1 Scope and object 5
1.2 Emission characteristics 5
1.3 System characteristics 6
1.4 Normative references 7
2 Terms and definitions 7
3 Test conditions 12
3.1 Standard test conditions 12
3.2 Supplementary test conditions 12
3.3 Characteristics of the measuring equipment 18
4 Measurements of receiver-decoder radio-frequency parameters 22
4.1 Sensitivity (data) 22
4.2 Adjacent radio-frequency signal selectivity (data) 24
4.3 Co-channel interference rejection (data) 28
4.4 Adjacent-channel selectivity (data) 28
4.5 Spurious response immunity (data) 28
4.6 Intermodulation immunity (data) 32
4.7 Sensitivity under multipath propagation conditions (data) 36
4.8 Acceptable radio-frequency displacement (data) 39
4.9 Impulsive-noise tolerance (data) 41
5 Measurements of receiver-decoder radio-frequency parameters (selective calling only) 45
5.1 Protection from radio-frequency intermodulation false operation (selective calling) 45
5.2 False responses due to noise (selective calling) 46
5.3 Signalling attack time (selective calling) 48
5.4 Recovery time (selective calling) 48
5.5 Required protection time (selective calling) 49
5.6 Signal-to-residual output-power ratio (selective calling) 49
6 Measurements of receiver-decoder conducted and radiated spurious components 50
6.1 Conducted spurious components (data and selective calling) 50
6.2 Radiated spurious components (data) 51
7 Measurements of encoder-transmitters radio-frequency parameters 51
7.1 Frequency error (data) 51
7.2 Average radio-frequency output power (data) 55
7.3 Spurious narrow bandwidth radio-frequency emission power (data) 56
7.4 Adjacent and alternate channel power (data) 58
8 Audio-frequency band measurements of encoder output characteristics (selective calling) 65
8.1 Tone pulse-rise time (selective calling) 65
8.2 Tone pulse duration (selective calling) 65
8.3 Tone pulse-decay time (selective calling) 66

Copyright International Electrotechnical Commission
Provided by IHS under license with IEC
No reproduction or networking permitted without license from IHS Not for Resale

Clause Page

8.4 Frequency of tone(s) (selective calling) 66
8.5 RMS voltage of tone(s) (selective calling) 67
8.6 Encoder overall operate time (selective calling) 67
9 Audio-frequency band measurements of decoder characteristics (selective calling) 68
9.1 Decoder operation level range (selective calling) 68
9.2 Decoder attack time (selective calling) 68
9.3 Decoder recovery time (selective calling) 68
9.4 Decoder required protection time (selective calling) 69
9.5 Decoder alarm time (selective calling) 69
10 Overall measurements in simulated systems (selective calling) 70
10.1 General 70
10.2 Supplementary conditions of measurement for system response times 70
10.3 System overall operate time (selective calling) 70
10.4 System recovery time (selective calling) 70
11 Measurements of receiver-decoder radio-frequency parameter (integral antenna) 71
11.1 Radiation sensitivity (data) 71
11.2 Selectivity (data) 74
11.3 Acceptable radio-frequency displacement 74
11.4 Impulsive-noise tolerance (integral antenna) 74
12 Measurements of encoder-transmitters radio-frequency parameters (integral antenna) .. 75
12.1 Radiated radio-frequency power (data) 75

Annex A (normative) Examples of combining networks 89
Annex B (normative) Recommended characteristics of measuring equipment and methods of test 92
Annex C (normative) Rayleigh fading simulator 94
Annex D (informative) Intermodulation response 100
Annex E (normative) Accuracy and dispersion of methods of measurement and compliance tests for sensitivity (data and selective calling) and degradation measurements (data and selective calling) 101
Annex F (normative) Mean time between false calling responses (*M*) (selective calling) . 133
Annex G (normative) General information on impulsive noise and random impulse generator 136
Annex H (informative) Example of a mains power line impedance stabilization network 142
Annex I (informative) Measuring error of the occupied bandwidth centre frequency using spectrum analyser 145

Copyright International Electrotechnical Commission
Provided by IHS under license with IEC
No reproduction or networking permitted without license from IHS Not for Resale

INTERNATIONAL ELECTROTECHNICAL COMMISSION

_____

RADIO EQUIPMENT USED IN MOBILE SERVICES – METHODS OF MEASUREMENT –

Part 6: Data equipment

FOREWORD

1) The IEC (International Electrotechnical Commission) is a worldwide organization for standardization comprising all national electrotechnical committees (IEC National Committees). The object of the IEC is to promote international co-operation on all questions concerning standardization in the electrical and electronic fields. To this end and in addition to other activities, the IEC publishes International Standards. Their preparation is entrusted to technical committees; any IEC National Committee interested in the subject dealt with may participate in this preparatory work. International, governmental and non-governmental organizations liaising with the IEC also participate in this preparation. The IEC collaborates closely with the International Organization for Standardization (ISO) in accordance with conditions determined by agreement between the two organization.
2) The formal decisions or agreements of the IEC on technical matters express. as nearly as possible, an international consensus of opinion on the relevant subjects since each technical committee has representation form all interested National Committees.
3) The documents produced have the form of recommendations for international use and are published in the form of standards, technical reports or guides and they are accepted by the National Committees in that sense.
4) In order to promote international unification, IEC National Committees undertake to apply IEC International Standards transparently to the maximum extend possible in their national and regional standards. Any divergence between the IEC Standard and the corresponding national or regional standard shall be clearly indicated in the latter.
5) The IEC provides no marking procedure to indicate its approval and cannot be rendered responsible for any equipment declared to be in conformity with one of its standards.
6) Attention is drawn to the possibility that some of the elements of this International Standard may be the subject of patent rights. The IEC shall not be held responsible for identifying any or all such patent rights.

International Standard IEC 60489-6 has been prepared by IEC technical committee 102: Equipment used in radio communications for mobile services and for satellite communication systems.

This third edition of IEC 60489-6 cancels and replaces the second edition, published in 1987, amendment 1 (1989) and amendment 2 (1991). This third edition constitutes a technical revision.

The text of this standard is based on the following documents:

FDIS	Report on voting
102/44/FDIS	102/54/RVD

Full information on the voting for the approval of this standard can be found in the report on voting indicated in the above table.

This publication has been drafted in accordance with the ISO/IEC Directives, Part 3.

IEC 60489-6 forms one of a series of publications under the general title*: Radio equipment used in mobile services – Methods of measurement.* Future standards in this series will carry the new general title as cited above. Titles of existing standards in this series will be updated at the time of the next revision.

Annexes A, B, C, E, F and G form an integral part of this standard.

Annexes D, H and I are for information only.

A bilingual version of this standard may be issued at a later date.

Copyright International Electrotechnical Commission
Provided by IHS under license with IEC
No reproduction or networking permitted without license from IHS Not for Resale

RADIO EQUIPMENT USED IN MOBILE SERVICES – METHODS OF MEASUREMENT –

Part 6: Data equipment

1 General

1.1 Scope and object

This part of IEC 60489 refers specifically to mobile radio transmitters and receivers for the transmission of data (telegraphy) signals having the emission characteristics given in 1.1.

This standard is intended to be used in conjunction with IEC 60489-1. The terms and definitions and the conditions of measurement set forth in this standard are intended for type and acceptance tests.

The object of this standard is to standardize the definitions, the conditions and the methods of measurement used to ascertain the radio-frequency performance of data and selective call equipment, thus making possible meaningful comparisons of the results of measurements made by different observers and on different equipment.

This standard will cover the following types of data signals:

– bit streams;
– character strings;
– messages;
– selective calling.

Selective calling differs from messages in their intended functions; it may be considered as data signals, analogous to messages transmitting only the information required to activate an alarm on one receiver or a group of receivers.

The methods of measurements for the radio-frequency parameters are appropriate for the four types of data signals.

To differentiate between the radio-frequency parameters (e.g. adjacent channel power, frequency error) measured in this standard from those in associated standards, the name of each parameter is followed by either “(bit stream)” or “(character string)” or “(message)” or “(selective calling)”. After each radio-frequency parameter the general term “(data)” is used. When each equipment is measured, the proper data type “(bit stream)” “(character string)” “(message)” or “(selective calling)” will be substituted for “(data)”.

1.2 Emission characteristics

This standard is applicable to the following emission characteristics expressed according to the ITU Radio Regulations Emission Designation.

Emission characteristics are expressed by four symbols:

a) – b) – c) – d)

where

a) is the type of modulation of the main carrier;

Copyright International Electrotechnical Commission
Provided by IHS under license with IEC
No reproduction or networking permitted without license from IHS Not for Resale

b) is the nature of signals modulating the main carrier;

c) is the type of information to be transmitted;

d) is the detail of signal(s) (optional).

a) Type of modulation of the main carrier (first symbol):

(A) double-sideband;

(H) single-sideband, full carrier;

(R) single-sideband, reduced or variable level carrier;

(J) single-sideband, suppressed carrier;

(F) frequency modulation;

(G) phase modulation.

b) Nature of signal(s) modulating the main carrier (second symbol):

(1) a single channel containing quantized or digital information without the use of a modulating sub-carrier;

(2) a single channel containing quantized or digital information with the use of a modulating sub-carrier;

(3) two or more channels containing quantized or digital information.

c) Type of information to be transmitted (third symbol):

(A) telegraphy – for aural reception;

(B) telegraphy – for automatic reception;

(C) facsimile;

(D) data transmission, telemetry or telecommand.

d) Details of signal(s) (fourth symbol, optional):

(A) two-condition code with elements of differing numbers and/or durations;

(B) two-condition code with elements of the same number and duration without error-correction;

(C) two-condition code with elements of the same number and duration with error-correction;

(D) four-condition code in which each condition represents a signal element (of one or more bits);

(E) multi-condition code in which each condition represents a signal element (of one or more bits);

(F) multi-condition code in which each condition or combination of conditions represents a character.

NOTE – See ITU Radio Regulations (edition 1982), Article 4 and Appendix 6 (AP6, part A) for details and definition of the emission characteristics.

1.3 System characteristics

1.3.1 Transmitter

The transmitters that are measured using the methods in this standard may be capable of simultaneously transmitting two or more data signals or voice and a data signal. The operational characteristics of the system in which the transmitter will be used will establish if the transmitter will be required to simultaneously transmit several types of signals.

Many of the systems that require the transmitter to transmit both analogue voice and data arrange it so that either voice or data are transmitted, but not simultaneously. In this instance this standard would be used to measure the transmitter radio-frequency parameters with the transmitter in the data mode only. IEC 60489-2 should be used to measure the radio-frequency parameters with the transmitter in the analogue voice mode.

Copyright International Electrotechnical Commission
Provided by IHS under license with IEC
No reproduction or networking permitted without license from IHS Not for Resale

When the system requires that the transmitter transmit simultaneously more than one signal, the radio-frequency parameters will be measured with the transmitter transmitting only the maximum number of simultaneous signals required by the system. For example, a transmitter may be capable of transmitting three types of signals, but the system may require under some circumstances that two signals be transmitted simultaneously and, at all other times, only one signal will be transmitted. In this case, the measurements should be made while the transmitter is transmitting the two simultaneous signals.

When the system requires that input signals, other than the data signal to be used in the measurement, be applied simultaneously with the data signal to the transmitter under test, they should be applied to the proper port and at the signal levels specified by the manufacturer. The measurements in this standard will then be made using simultaneously the data signal and the other required signals (see figure 1).

1.3.2 Receiver

In this standard, the subclauses entitled “Method of measurement” are designed to measure the value of a radio-frequency parameter. In some cases, it is only necessary to determine if the receiver-decoder is compliant with the radio-frequency parameter specification. This can usually be done more simply and with less effort than measuring the radio-frequency parameter. For the more frequently measured radio-frequency parameters, a compliance test method is included in the appropriate clauses. The specified value for the radio-frequency parameter will be the appropriate value specified by a regulation, contract or equipment specification.

The degradation measurements for receivers (4.3 to 5.1) requires the knowledge of the sensitivity. This sensitivity is used to derive a value for the wanted signal level. In one case, the sensitivity to use is the measured usable sensitivity – MUS – (determined according to 4.2 for every equipment under test). Alternatively, it is possible to use the specified usable sensitivity – SUS – applicable for a set of equipment.

According to the type of measurement performed, it is necessary to add, immediately after the name of each measured parameter, either “(referred to MUS)” or “(referred to SUS)”.

1.4 Normative references

The following normative documents contain provisions which, through reference in this text, constitute provisions of this part of IEC 60489. For dated references, subsequent amendments to, or revisions of, any of these publications do not apply. However, parties to agreements based on this part of IEC 60489 are encouraged to investigate the possibility of applying the most recent editions of the normative documents indicated below. For undated references, the latest edition of the normative document referred to applies. Members of IEC and ISO maintain registers of currently valid International Standards.

IEC 60050(721), *International Electrotechnical Vocabulary – Chapter 721: Telegraphy, facsimile and data communication*

IEC 60489-1, *Methods of measurement for radio equipment used in the mobile services – Part 1: General definitions and standard conditions of measurement*

IEC 60489-2, *Methods of measurement for radio equipment used in the mobile services – Part 2: Transmitters employing A3E, F3E or G3E emissions*

2 Terms and definitions

For the purpose of this part of IEC 60489, the definitions given in IEC 60489-1, as well as the following supplementary definitions, apply.

Copyright International Electrotechnical Commission
Provided by IHS under license with IEC
No reproduction or networking permitted without license from IHS Not for Resale

2.1
average frequency
number of positive (or negative) going zero crossings of the signal divided by the total time duration of the measurement

2.2
binary digit bit
member of a set of two elements commonly used to represent information [IEV 721-02-08]

2.3
bit rate
number of bits transmitted per unit of time, expressed in bit/s, kbit/s or Mbit/s

2.4
bit stream
continuous series of bits

2.5
character
member of a set of elements agreed upon to be used for organization, representation or control of information

NOTE – Characters may be letters, digits, punctuation marks or other symbols and, by extension, function controls such as space shift, carriage return or line feed contained in a message.

[IEV 721-03-09]

2.6
character string
character or sequence of characters

2.7
comparator (data)

2.7.1
comparator (bit stream or character string)
device capable of

– storing a reference sequence of bits or characters,
– counting the number of bits or characters that are transmitted,
– comparing the bits or characters received with the reference sequence of bits or characters,
– counting the number of correctly received bits or characters

2.7.2
comparator (message or selective calling)
device or person capable of

– storing a reference message or call,
– counting the number of times a message or a call is transmitted,
– comparing the message or the call received with the reference message or call,
– counting the number of correctly received message or calls

2.8
data
information represented in a manner suitable for automatic processing

[IEV 721-01-02]

--`,,`,,`-`-`,,`,,`,`,,`---

Copyright International Electrotechnical Commission
Provided by IHS under license with IEC
No reproduction or networking permitted without license from IHS Not for Resale

2.9
data source
device that generates the standard baseband test signals in the form of an electrical signal. For character and messages, this is normally specified by the equipment manufacturer

2.10
decoder
device, which may be in the receiver, that translates the demodulated signal into the intended output signal.

For selective calling, the output signal is only an alarm, indicating that any or all receivers and their associated decoders have received their intended coded signals

NOTE – The alarm may be a lamp, a “bleep” generated within the decoder, a vibrator, or only the opening of a mute or squelch circuit. The latter is usually indicated by an increase in the residual noise level at the output of the receiver.

2.11
encoder
device which translates a group of input signals into a unique group of output signals suitable for transmission (see figure 1)

NOTE – Examples of functions that may be involved are

– addition of synchronization bits,

– addition of error correction bits,

– parallel/serial conversion,

– amplitude and phase shaping.

2.12
erroneous bit, character or message
any decoded bit, character or message that is not the same as the transmitted bit, character or message

2.13
error
failure to decode correctly the intended transmitted bit, character, message or selective calling

NOTE – Another type of error is the reception of data in the absence of any intended transmission (false reception). The mean time between two successive false receptions is generally so high that a measurement would be impractical; this parameter is estimated by calculation.

2.14
error ratio
number of erroneous bits, character messages or selective callings received, divided by the total number of bits, characters, messages or selective callings transmitted, respectively.

For selective calling (1 – error ratio) is also called “calling probability”

2.15
message
group of characters and function control sequences which is transferred as an entity from a transmitter to a receiver, where the arrangement of the characters is determined at the transmitter

[IEV 721-09-01]

2.16
message format
description of the elements and their arrangement in a message

NOTE – The arrangements may include among other items, synchronization bits, address bits, text, flag bits and additional bits for error correction and/or detection:

a) synchronization bits: additional bits which are provided only for the purpose of synchronization;

Copyright International Electrotechnical Commission
Provided by IHS under license with IEC
No reproduction or networking permitted without license from IHS Not for Resale

b) address: information that identifies the address or identifies the sending unit;

c) function: information that identifies which of a plurality of responses is to be executed;

d) text: information (e.g. character string);

e) error control bits: bits which are provided solely for the purpose of error correction and/or detection.

2.17
modulation

NOTE – The detailed description of the modulation should be given in specifications of equipment under test.

2.17.1
analogue modulation

2.17.1.1
amplitude modulation:
– peak envelope amplitude: the amplitude of one radio-frequency oscillation at the crest of the envelope of the modulated wave;

– modulation depth: for double-sideband amplitude modulation, the modulation depth, in per cent, is given by the following:

$$\text{modulation depth} = \frac{(V_{max} - V_{min})}{(V_{max} + V_{min})} \times 100\ \%$$

where

V_{max} is the peak-to-peak voltage at the crest of modulation;

V_{min} is the peak-to-peak voltage at the valley of modulation

2.17.1.2
frequency or phase modulation
– maximum permissible deviation: the value to which the peak frequency or phase deviation is limited by an agreed convention for a particular class of service;

– deviation: the variation of the carrier wave in frequency or phase, expressed in per cent of the maximum permissible deviation

2.17.2
digital modulation

2.17.2.1
keying method
for example,

– frequency-shift keying (FSK)

– phase-shift keying (PSK)

– minimum-shift keying (MSK)

2.17.2.2
roll-off factor and its transmitter percentage
– roll-off factor is expressed by the product of the pulse-shaping function baseband filter cut-off frequency and the modulation symbol time

– transmitter percentage is the ratio percentage of the roll-off factor, which is performed by transmitters, the residual percentage being performed by receivers

2.18
port
place of access to a device or network where energy, representing data, may be supplied or withdrawn, or where the device or network variable may be observed or measured

--`,,`,,`-`-`,,`,,`,`,,`---

Copyright International Electrotechnical Commission
Provided by IHS under license with IEC
No reproduction or networking permitted without license from IHS Not for Resale

2.19
radio pager
small radio receiver-decoder which produces an alarm following reception of a selective call; intended to be worn on a person and usually has an integral antenna

2.20
reference error ratio
the following reference error ratios apply for an equipment measured with the standard test signal code (data):

– reference error ratio (bit stream or character string) 0,01 or 1 %;

– reference error ratio (message or selective calling) 0,2 or 20 %.

For selective calling (1 – reference error ratio) = 0,8 or 80 % is also called “standard calling probability”

2.21
selective-calling system
system whereby the transmission of a signal code from a station enables another predetermined station or group of stations to be called exclusively; it may be used as “selective calling” or “selective call”

2.22
standard baseband test signals
for the purpose of the measurements described in this standard the following definitions apply:

a) reference sequence of bits

binary sequence pattern of 511 bits which are generated in a pseudo-random order

NOTE – For details concerning the generation of the pseudo-random binary sequence (PRBS) pattern, see CCITT Fascicle VIII.1, Recommendation O.153.

b) reference sequence of characters

character sequence pattern comprising all elements of a specified character set arranged in a specified pseudo-random order

c) reference message or selective call

message or selective call whose content is defined in the equipment specification

NOTE – This unique message is repeated three or four times in the “up and down” method.

2.23
standard coded test signal (data): SCTS (data)
radio-frequency signal applied to a data receiver-decoder that simulates the output of a transmitter which is modulated by one of the following standard baseband test signals:

– the reference sequence of bits; or

– the reference sequence of characters, or

– the reference message or the selective call

– at the bit rate defined in the data equipment specification

All parameter tolerances (e.g. rise time, tone frequencies, phase-shift angles) should be small enough to ensure that the results are not significantly influenced. In addition to any other parameters, the equipment specification should define the appropriate values for

– the modulation depth of double-sideband modulation, or

– the frequency/phase deviation of angle modulation, or

– the amplitude relationship to the carrier of single-sideband, full, reduced or variable carrier modulation,

– the frequency relationship to the carrier of single-sideband, full, reduced or variable carrier modulation

Copyright International Electrotechnical Commission
Provided by IHS under license with IEC
No reproduction or networking permitted without license from IHS Not for Resale

2.24
standard train of standard coded test signal (bit stream or character string)

NOTE 1 – The length of the standard trains has been chosen in order to achieve a dispersion of ±1 dB for the measurement of reference sensitivity and of ±2 dB for all other measurements.

For all measurements and compliance tests, except sensitivity reduction under multipath propagation conditions (bit stream or character string), the standard trains are

– for bit stream : 2 556 bits of SCTS;

– for character string : 2 556 characters of SCTS

NOTE 2 – For the measurements in this standard, the required reliability is obtained if the transmission is stopped after 26 bit or character errors are detected.

2.25
standard unwanted signal (data)
the standard unwanted signal for measuring spurious response immunity and intermodulation immunity is not modulated.

The standard unwanted signal for measuring adjacent radio-frequency signal selectivity or co-channel interference rejection is continuously modulated with a binary sequence pattern of 32 767 bits which is generated in a pseudo-random order. The modulation is identical with the modulation characteristics of the system transmitter

2.26
telegraphy
form of telecommunication in which the transmitted information is intended to be recorded on arrival as a graphic document; the transmitted information may sometimes be presented in an alternative form or may be stored for subsequent use

NOTE 1 – A graphic document records information in a permanent form and is capable of being filed and consulted; for example, it may take the form of written or printed matter or of a fixed image.

NOTE 2 – This is the definition given in the International Telecommunication Convention (Nairobi, 1982).

NOTE 3 – Telegraphy does not include television or videography.

[IEV 721-01-06, modified]

3 Test conditions

3.1 Standard test conditions

3.1.1 Unless otherwise stated, measurements shall be performed under the general test conditions as stated in IEC 60489-1 and the supplementary test conditions given in 3.2.

3.1.2 In this standard, the methods of measurement have been developed under the assumption that automatic test equipment is available.

3.1.3 If the data source and encoder are external to the transmitter but are dedicated to its application, the manufacturer shall supply to the organization making the measurements either detailed information so that the items can be fabricated, or the device itself.

3.2 Supplementary test conditions

3.2.1 Receivers

3.2.1.1 Receiver-decoder having an integral antenna

In this standard, the methods of measurement and compliance tests have been written for receivers having antenna terminals. For receivers with integral antennas, the following test conditions apply:

Copyright International Electrotechnical Commission
Provided by IHS under license with IEC
No reproduction or networking permitted without license from IHS Not for Resale

– for average radiation sensitivity (data) (see 11.1.6), measurements and compliance tests are made on a test site;

– measurements and compliance tests in 4.1 through 4.9 (data) for receiver-decoders having an integral antenna are made with the receiver in a suitable radio-frequency coupling device (RFCD).

The RFCD may be

– a test fixture device for coupling a given equipment with an integral antenna to an input socket. It is generally designed and provided by the manufacturer. It allows relative measurements to be performed at the same frequency or around the same frequency. Therefore the measurements and compliance tests in 4.5 (spurious response immunity) and in 6.1 (radiated spurious components) are excluded;

– a stripline arrangement as described in IEC 60489-1, annex A, clause A.3. This is a measuring instrument for coupling any equipment with integrated antenna to an input socket. It allows relative measurement of signals to be performed situated at different frequencies.

The same procedures are used as for receivers having antenna terminals, except that the input-signal level recorded is that introduced at the input terminals of the RFCD instead of at the antenna terminals of the receiver.

NOTE 1 – For message or selective calling, the measurements and compliance tests (4.1 through 4.9) have been designed for non-automatic use: the number of trials in these measurements and compliance tests have been reduced to the minimum required to obtain the necessary accuracy and variation. Various automatic measurement procedures may be used, but it is not proposed that they be standardized at this time. On the other hand, for bit stream and character string, the measurements and compliance tests (4.1 through 4.9) have been designed to use automatic error counting equipment.

NOTE 2 – The measurements in 4.1 through 4.9 (message or selective calling) can be used for continuous signal (e.g. continuous tone controlled squelch systems) provided that a time for the operation of the decoder is specified (e.g. 300 ms).

3.2.1.2 Input-signal arrangements for testing receivers equipped with suitable antenna terminals

Depending on the type of modulation and the measuring equipment available, one of the three measuring arrangements described below shall be employed.

a) Arrangement A

The arrangement comprises the following pieces of equipment:

– a test data source and an encoder as required, or a test encoder combining these two functions;

– a radio-frequency signal generator or an alternate signal source (see 3.3.9) capable of being modulated in accordance with the type of modulation used by the receiver;

– an impedance matching network (or pad; see (3) of figure 2) placed as close as possible to the receiver under test.

NOTE – Examples of impedance matching networks and combining networks are given in annex A.

b) Arrangement B

For some types of single-sideband modulation, with corresponding characteristics as given in 1.2 b) (1), it may be possible to simulate the modulated signal by using two radio-frequency generators. In this case, an arrangement similar to arrangement A may be used, but with the signal generator or alternate signal source replaced by two radio-frequency signal generators, the outputs of which are connected to a combining network terminated in an adjustable attenuator.

c) Arrangement C

The arrangement is similar to arrangement A, except that it also requires a means to convert the output frequency of the alternate signal source to the nominal frequency specified for the receiver. This is accomplished by using a radio-frequency signal generator

Copyright International Electrotechnical Commission
Provided by IHS under license with IEC
No reproduction or networking permitted without license from IHS Not for Resale

and a frequency converter which is terminated in an adjustable attenuator. Some measurements require an unwanted signal to be added. This signal is supplied by a radio-frequency signal generator connected to one of the inputs of a combining network which is inserted at a convenient place in the transmission line (2) shown in figure 2.

The presentation of results shall state which of the arrangements A, B or C has been used.

For arrangements A and C, the performance of the alternate signal source should be such that the receiver parameters may be measured up to values which are at least 10 dB greater than the receivers specified values.

3.2.1.2.1 Source impedance of the measuring arrangement for receivers requiring a specified source resistance

This subclause applies to receivers which are connected to the antenna by means of a transmission line (which is synonymous with “feeder line”) having a specified characteristic impedance, for example equal to R_n, R_n being the specified nominal radio-frequency input impedance of the receiver.

The source impedance R_s of the measuring arrangement shown in figure 2 shall be equal to the specified source resistance, or, in the absence of such specification, to the specified nominal radio-frequency input impedance R_n of the receiver.

The nominal radio-frequency input impedance is that value stated by the manufacturer for which the equipment performance will be optimum when connected to an antenna or transmission line of the same impedance.

3.2.1.2.2 Input-signal source for receivers tested with the aid of an artificial antenna

This subclause is applicable to receivers intended to operate with an antenna having a complex impedance.

The input-signal source shall consist of a radio-frequency signal generator, a transmission line, an impedance matching network, and an artificial antenna. The characteristics of the artificial antenna shall be specified by the manufacturer of the receiver.

3.2.1.2.3 Receivers tested with the aid of an artificial antenna

The input-signal level is the e.m.f. of the source connected to the input terminals of an artificial antenna. It should be expressed in μV or dB(μV).

3.2.1.3 Input-signal measuring convention

3.2.1.3.1 Receiver requiring a specified source resistance

The input-signal level should preferably be determined by measuring the electromotive force present at the output terminals of the unterminated input-signal source (e.m.f. of figure 2).

Alternatively, the input-signal level may be determined by measuring the matched-load (ml) voltage across a resistance having a value equal to R_s.

The matched-load (ml) voltage is one-half the value of the e.m.f.

When the input-signal level is determined with a voltmeter incorporated in the equipment supplying the input signal (voltage e_g in figure 2), the loss of the impedance matching network and, if applicable, also the losses of the transmission line and any combining network and adjustable attenuators inserted in the transmission line shall be taken into account.

Copyright International Electrotechnical Commission
Provided by IHS under license with IEC
No reproduction or networking permitted without license from IHS Not for Resale

The presentation of results shall state which voltage has been recorded, for example, 2 μV (e.m.f.) or 1 μV (ml). The source resistance R_S, shall be stated with the results.

3.2.1.3.2 Input-signal level

In this standard, the input-signal levels of the wanted and unwanted signals shall be expressed in terms of r.m.s. values as follows:

– for angle (type G or F: phase or frequency) modulation, including frequency-shift and phase-shift modulation or keying: the r.m.s. voltage of the signal, either modulated or unmodulated;
– for on-off modulation, or keying of a sinusoidal carrier which may or may not be modulated with an additional signal: the r.m.s. voltage of the continuous carrier, without modulation;
– for double-sideband amplitude (type A) modulation with full carrier: the r.m.s. voltage of the unmodulated carrier;
– for single-sideband amplitude (type H or R) modulation with full, reduced or variable carrier: the r.m.s. value of a sinusoidal voltage, the peak value of which is equal to the amplitude of one radio-frequency cycle at the crest of the envelope of the modulated wave.

The input-signal levels may be expressed in μV or dB(μV) and shall be determined in accordance with 3.2.1.2.

3.2.1.4 Connections of the measuring equipment

The data measuring equipment shall be connected to the port that provides signals for the intended application.

Care should be taken that the input impedance of the measuring equipment does not affect the loading conditions specified for the receiver.

3.2.1.5 Standard input signal

3.2.1.5.1 Standard input signal (type A, G or F modulation)

A radio-frequency signal at standard input-signal level with standard modulation, at the standard input-signal frequency.

3.2.1.5.2 Standard input signal (type H or R modulation)

A radio-frequency signal or linear combination of two radio-frequency signals from a signal source that simulates the single-sideband emission from a transmitter when it is modulated with an audio-frequency signal of 1 000 Hz.

The frequencies and the levels of the input signal are dependent upon the class of emission they represent. Two frequencies, one of which represents the carrier and the other the sideband, are chosen so that when demodulated they will produce an audio output at a frequency of 1 000 Hz.

The standard input-signal levels are

Class of emission	**Signal representing carrier** dB(μV)	**Signal representing sideband** dB(μV)
R3E	+42	+60
H3E	+54	+54

Copyright International Electrotechnical Commission
Provided by IHS under license with IEC
No reproduction or networking permitted without license from IHS Not for Resale

3.2.1.6 Standard input-signal level

Unless otherwise specified, the standard input-signal level for a receiver of the type considered in this standard is 60 dB(μV) (e.m.f.) or 54 dB(μV) (ml).

3.2.1.7 Standard input-signal frequency

For all tests, except where otherwise specified, the standard input-signal frequency is one of the specified nominal frequencies. For SSB type of modulation, the nominal frequency is the frequency of the carrier.

3.2.1.8 Standard modulation of an input signal

a) for digital modulation

The standard modulation is the nominal modulation specified in the systems to be used. The modulation type (e.g. GMSK or π/4 shifted QPSK), the pulse-shaping function, its transmitter percentage and the symbol rate will be the dominant parameters of the digital modulation.

b) for analogue modulation

The modulation due to an input signal of 1 000 Hz at a level to produce

– a modulation depth of 30 %;

– 60 % of maximum permissible frequency (or phase) deviation.

3.2.1.9 Input-signal arrangements for testing the receiving part of equipment for duplex operation

When the performance of the receiving part of equipment for duplex operation is to be evaluated while the associated transmitting part is operating, precautions should be taken in order to ensure that the operation of the signal generator or generators used for testing the receiving part is not affected by the radio-frequency signal of the transmitting part and that the latter is terminated by its proper load impedance.

3.2.1.9.1 Input-signal source

An example of a suitable arrangement for making measurements on receivers of equipment for duplex operation is shown in figure 3.

Connect the input-signal source (1) (levels adjusted in accordance with 3.2.1.3) to point A'. The centre frequency of the band-stop filter (2) is adjusted to the operating frequency of the transmitter under test.

The impedance at point B' shall be such that the transmitting part is operating under the specified matched conditions. To ensure that the VSWR will be less than 1,25, irrespective of any mismatch caused by the band-stop filter (2) and the combining unit (4), the attenuation of the attenuator (3) should be at least 30 dB. It should be noted that the attenuator will dissipate nearly all of the power from the transmitting part and therefore shall have suitable power-handling capability.

3.2.1.9.2 Input-signal level

The level of the radio-frequency input signal shall be determined at point B' of figure 3.

3.2.1.9.3 Input-signal location

The radio-frequency input signal shall be determined at point B' of figure 3.

Copyright International Electrotechnical Commission
Provided by IHS under license with IEC
No reproduction or networking permitted without license from IHS Not for Resale

3.2.2 Transmitter

3.2.2.1 General

This standard allows for the measurement of many types of data signals. While some of the data signals are continuous or extend for many seconds, there are others that have a duration of only a few milliseconds. In this standard, the radio-frequency parameter is measured and the results averaged only over the duration of the data signal. However, in the case of short duration signal, this signal may be repeated for the purpose of the measurement.

For transmitters used in systems that require the transmitter to transmit more than one signal simultaneously, the measurement is made while the transmitter is transmitting the maximum number of signals required by the system. If one of the data signals has a short duration, the measurement is made during that short duration.

This standard recognizes that the methods of measurements that are suitable for making the measurements for long-duration data signals may not be suitable when the data signals are of short duration. Therefore, this standard contains different methods of measurement for different equipment and provides a guide for determining when each method of measurement should be used.

3.2.2.2 Selection guideline for methods of measurement

A guideline for selecting the correct method of measurement to be used for the transmitter under test is provided. The operation mode of a transmitter is characterized by modulation state (unmodulated or modulated), transmission mode (continuous or intermittent) and modulating signal (random date or non-random data). Such characteristics propose several types of signal:

a) Type 1: Continuous emission, capable of unmodulated carrier transmission

   Transmitters which can emit an unmodulated carrier which may be considered to be continuous for the purpose of the measurement.

b) Type 2: Continuous emission, allowed state

   Transmitters (e.g. FSK modulation) which can emit a radio-frequency signal that represent one of the allowed states (e.g. mark or space for a two-state system) and may be considered to be continuous for the purpose of the measurement.

c) Type 3: Continuous emission, modulated carrier

   Transmitter which cannot be operated unless the carrier is modulated, and whose signal may be considered to be continuous for the purpose of the measurement.

   This type is further classified by the type of modulating signal for the purpose of the frequency error measurement:

   Type 3 a: modulated with random data (symmetrical spectrum);

   Type 3 b: modulated with non-random data (asymmetrical spectrum).

   NOTE – Standard baseband test signal (bit stream) (see 2.22) is a kind of random data for the purpose of this measurement. Another source signal is not necessarily random for the purpose of this measurement.

d) Type 4: Short emission, modulated carrier

   Transmitters which may only emit a data modulated radio-frequency signal for a short time (however, such transmitters may emit for a longer period of time either unmodulated or modulated with another signal) but repeatedly, either periodically or manually triggered.

   This type is further classified by the type of modulating signal for the purpose of the frequency measurement:

   Type 4 a: modulated with random data (symmetrical spectrum);

   Type 4 b: modulated with non-random data (asymmetrical spectrum).

   NOTE – It is possible to define a type 5: short emission, unmodulated carrier but this type is not necessary in this standard.

Copyright International Electrotechnical Commission
Provided by IHS under license with IEC
No reproduction or networking permitted without license from IHS Not for Resale

3.2.2.3 Output signal measuring arrangements for transmitters having accessible antenna terminals

3.2.2.3.1 Test load

A non-radiating load, with an impedance and power rating specified by the transmitter manufacturer, to replace the antenna including any associated transmission line when the transmitter is being tested.

3.2.2.3.2 Connections to the measuring equipment

Care should be taken to ensure that measuring equipment and any coupling devices do not adversely affect the transmitter loading conditions.

3.3 Characteristics of the measuring equipment

Where necessary (for measuring equipment which may not be commercially available), and to ensure that different operators at different locations will obtain similar results when measuring the same receiver, certain characteristics of the measuring equipment and test sites have been specified. Procedures for verifying that the measuring equipment meets these specifications are also given.

3.3.1 Signal generator intermodulation characteristics

A method for identifying intermodulation between signal generators, the outputs of which are combined, is given in annex B.

3.3.2 Signal generator noise characteristics

A method for identifying signal generator noise is given in annex B.

3.3.3 Selective measuring device

The selective measuring device may be a frequency selective voltmeter, a spectrum analyser or a calibrated field-strength meter. The bandwidth of the measuring device shall be appropriate for the measurement being made or shall be adjusted to the value stated in the method of measurement.

3.3.4 Radio-frequency coupling device (RFCD) characteristics and measurements

The measurements in this standard are applicable to receivers having either antenna terminals or an integral antenna.

Measurements of the radio-frequency parameters of receivers having an integral antenna are performed in an RFCD. The RFCD may be

– a test fixture, device for coupling a given equipment with an integral antenna to an input socket. It is generally designed and provided by the manufacturer. It allows relative measurements to be performed at the same frequency or around the same frequency. Therefore, the measurements and compliance tests of measured usable sensitivity, of spurious response immunity and radiated spurious components are excluded;
– a stripline arrangement as described in IEC 60489-1, annex A, clause A.3. This is a measuring instrument for coupling any equipment with integrated antenna to an input socket. It allows relative measurement of signals to be performed situated at different frequencies.

When making these measurements, precautions shall be taken to ensure that

– the receiver is adequately shielded from electromagnetic disturbance;

--`,,`,,`-`-`,,`,,`,`,,`---

Copyright International Electrotechnical Commission
Provided by IHS under license with IEC
No reproduction or networking permitted without license from IHS Not for Resale

– the attenuation of the coupling between the radiation source and the receiver being measured is sufficiently low, stable and constant throughout the measuring frequency range.

The coupling loss depends on the particular measuring arrangement, the frequency being used and the receiver being measured. Normally it is not precisely measured, as it is only useful for a particular measuring arrangement and frequency.

The coupling loss shall be sufficiently low so that the output power requirements at the signal generators used in this standard will not exceed the power output capability of commercially available signal generators.

To ensure measurement repeatability, an RFCD which includes the following should be used in the measurement arrangement:

– a radiating element;
– a radio-frequency input terminal connected to the radiating element through a transmission line;
– a means to ensure that the input impedance of the RFCD is the same as the impedance of the transmission line from the radio-frequency signal generator;
– a means for positioning the receiver being measured in a precise, repeatable and stable manner;
– a means to ensure that the presence of the person making the measurement does not affect the results.

It shall also have the following characteristics:

– a coupling loss between the radio-frequency input terminal and the receiver being measured of less than 30 dB;
– a coupling loss variation over the frequency range used in the measurement which does not exceed 2 dB;
– no non-linear elements which can affect the measurement results.

3.3.5 Combining networks

Examples of combining networks are given in annex A.

3.3.6 Rayleigh fading simulator characteristics

Annex C contains the following items:

– an example of a Rayleigh fading simulator;
– specifications for the required parameters;
– a method of measurement for the required parameters.

3.3.7 Characteristics of radiation test sites

IEC 60489-1, annex A, clause A.2 provides a guide for selection, characteristics, basic measuring procedure, construction, evaluation measurement and calibration method for OATS (Open area test site), LRTS (Low reflection test site), AC (Anechoic chamber) and RFM (Random field measurement) test sites.

3.3.8 Simulated man

A simulated man is required when the average radiation sensitivity (selective calling) of a radio pager is measured. A description of a simulated man and its use is given in IEC 60489-1, annex A, clause A.4.

Copyright International Electrotechnical Commission
Provided by IHS under license with IEC
No reproduction or networking permitted without license from IHS Not for Resale

3.3.9 Alternate signal source

For certain measurements, it may not be possible to modulate a radio-frequency signal generator to produce the necessary input signals, for example for single-sideband. In these circumstances, a transmitter may have to be used as an alternate signal source for the wanted or unwanted signal.

Some measurements require that the frequency be moved. A local oscillator, balanced mixer and filters may be used to make the frequency translation.

The characteristics of the alternate signal source should be such that the receiver parameters may be measured up to values which are at least 10 dB greater than the receivers' specified values.

Care shall be taken to shield the receiver from the transmitter.

3.3.10 Signal generators

Signal generators are normally characterized for sine-wave modulation, and application of non-sinusoidal waveforms, which are often encountered in the transmission of data, may lead to monitoring or modulation problems. Such problems can affect the overall accuracy of any measurements that are made.

3.3.10.1 Monitoring problems

If the signal generator is provided with a voltmeter system to monitor the applied external modulation signal, the readings may be in error when non-sinusoidal waveforms are applied. It is recommended that an oscilloscope be used to monitor the peak voltage of the applied data signal and that the level be adjusted to be equal to the amplitude of a pure sine-wave which would produce the required modulation condition. If the signal generator monitor shows the same indication on both input-signal conditions, then the user can be confident that inaccuracies due to monitoring will not be a problem.

3.3.10.2 Modulating problems

The signal generator modulating system has a finite bandwidth which is determined by high-pass and low-pass filters. The high-pass filter can introduce phase and amplitude errors at low frequencies, and the user should assess the suitability of the instrument from the data provided by the manufacturer. In some circumstances, a signal source with a response extending down to a sufficiently low frequency (e.g. 1 Hz) will be satisfactory.

The effect of the low-pass filter on the signal source will be most noticeable when modulating signals with fast rise and fall times are applied. Depending on the characteristics of the filters, the modulation applied to the carrier signal will exhibit overshoot or degradation of the rise and fall times. In practice, these problems can be eliminated by filtering the modulating signal before it is applied to the signal generator, so that the source correctly simulates a narrow-band transmitter.

3.3.11 Power meter

A device that responds to mean power.

3.3.12 Frequency measuring device

3.3.12.1 The accuracy of the frequency measuring device shall be at least 10 times more precise than the frequency tolerance given in the transmitter specification.

--`,,`,,`-`-`,,`,,`,`,,`---

Copyright International Electrotechnical Commission
Provided by IHS under license with IEC
No reproduction or networking permitted without license from IHS Not for Resale

3.3.12.2 When measuring frequency, phase-modulated or unmodulated continuous signals, conventional frequency counters which measure the number of positive- (or negative-) going zero crossings of the signal, divided by the duration of the measurement, may be used.

Systematic measuring error may exist depending on randomness of the modulating signal, but this may become negligible for the purpose of this standard if the 511-bit length pseudo-random binary sequence is used as a modulating signal.

3.3.12.3 When measuring a pulsed signal, a frequency counter with synchronous trigger mode may be used. Measuring accuracy and required measuring time depends on the pulse duration. When the pulse duration is longer than several milliseconds, this method may give a permissible measuring accuracy for the purpose of this standard in a practical measuring time. Measuring accuracy may be improved by averaging operation among multiple pulses.

NOTE – If pulse durations and gate width (GW) are 5 ms, pulse period Tp is 20 ms and resolution (R) is set at 10 Hz:

– measuring accuracy = ±0,5/GW
  = ±100 Hz r.m.s.
– measuring time = $Tp \times 1/(R \times GW)^2$
  = 8 s

3.3.12.4 When measuring other type of signals, a digital storage spectrum analyser may be used to measure the centre frequency of the frequency band occupied by an emission.

3.3.13 Power measuring receiver

Details for the power measuring receiver are given in annex B, clause B.3.

3.3.14 Waveform recorder

When a short or complex voltage waveform has to be averaged over the duration of the data modulation, the waveform should be captured so that the averaging calculations can be made. A digital sampling waveform recorder is one instrument that has this capability.

A waveform recorder is a voltage sampling device that has the following features:

– an envelope detector which has a bandwidth of at least three times the highest modulating frequency;
– an analogue-to-digital converter that produces words of at least 8 bits for each sample;
– a memory to store the digitized samples: the memory size shall be at least equal to the sampling rate times the modulation duration;
– a means to start and stop the sampling at the beginning and end of the data signal. This is the sampling gate. The duration of the data signal is usually given in the equipment specification;
– a means to delay the sampling gate. In some transmitters, it may be impossible to obtain a signal from the data source or encoder that coincides with the start of the data signal. The equipment specifications will usually indicate that the data signal will start at a given time after some other event, for example activation of the transmitter or an input function, which can be used to activate the delaying circuit;
– a means to read and transfer the stored samples to a computing device for calculations;
– a sampling rate that is at least three times the highest modulating frequency. This instrument may be a separate unit or it may be part of another instrument, for example a digital oscilloscope.

Copyright International Electrotechnical Commission
Provided by IHS under license with IEC
No reproduction or networking permitted without license from IHS Not for Resale

4 Measurements of receiver-decoder radio-frequency parameters

4.1 Sensitivity (data)

4.1.1 Measured usable sensitivity (MUS) (data)

4.1.1.1 Definition

The radio-frequency level of the standard coded test signal (SCTS) (data), at a specified frequency, which will result in the reference error ratio (data).

4.1.1.2 Method of measurement for bit stream or character string

a) Connect the equipment as illustrated in figure 4 with the switches in position b. Test equipment items (1) and (2) and a comparator are required (see 2.7).

b) Adjust the frequency of the radio-frequency signal generator (2) to one of the specified nominal frequencies or to the nominal frequency if this frequency is unique.

c) Using the encoder (1) modulate the radio-frequency signal generator (2) with the standard train of coded test signal (bit stream or character string) to generate the SCTS (bit stream or character string) (see 2.22, 2.23 and 2.24).

d) Adjust the level of the input signal to the receiver-decoder to the value of the measured usable sensitivity (bit stream or character string) stated in the equipment specification.

e) Transmit the standard train of SCTS (see 2.24).

f) Calculate and note the error ratio.

g) If the error ratio equals the reference error ratio (bit stream or character string), terminate the measurement. Record the radio-frequency signal level as the measured usable sensitivity (bit stream or character string) and proceed to step b) of 4.1.1.3.

   If the error ratio is less than the reference error ratio (bit stream or character string), decrease the input-signal level to the receiver-decoder by 0,5 dB.

   If the error ratio is greater than the reference error ratio (bit stream or character string), increase the input-signal level to the receiver-decoder by 0,5 dB.

h) Repeat steps e) through g) until two consecutive values of error ratio have been obtained, which bracket the reference error ratio (bit stream or character string). Record the input-signal level, V, in dB(μV) that corresponds to the error ratio which is just greater than the reference error ratio (bit stream or character string).

4.1.1.3 Presentation of results for bit stream or character string

a) Calculate the measured usable sensitivity (bit stream or character string), S, as:

$$S = V + 0{,}25 \quad (\text{dB}(\mu\text{V}))$$

   where V is the value of the input-signal level to the receiver-decoder recorded in step h) of 4.1.1.2.

b) Record the input signal arrangement used, characteristics of the SCTS (bit stream or character string) and the measured usable sensitivity (bit stream or character string).

4.1.1.4 Method of measurement for message or selective calling

a) Connect the equipment as illustrated in figure 4 with the switches in position b. Test equipment items (1), (2) and (3) are required (see 2.7).

b) Adjust the frequency of the radio-frequency signal generator (2) to one of the specified nominal frequencies or to the nominal frequency if this frequency is unique.

c) Apply to the attenuator (3) a signal having the standard input-signal frequency and at a level of approximately 60 dB(μV). Record this level as A.

Copyright International Electrotechnical Commission
Provided by IHS under license with IEC
No reproduction or networking permitted without license from IHS Not for Resale

d) Using the encoder (1) modulate the radio-frequency signal generator (2) with the reference sequence of messages or selective callings to generate the SCTS (message or selective calling) (see 2.22 and 2.23).

e) Adjust the step attenuator (3) to a value which will produce a high error ratio (e.g. 50 % or greater).

f) 1) Transmit the SCTS a maximum of three times, terminating the transmission sequence, if the receiver-decoder does not recognizes any of its SCTS. Adjust the step attenuator(3) according to step f)2) or f)3) whichever is appropriate.

2) If the receiver-decoder fails to recognize either the first, second or third SCTS, decrease the attenuation of (3) by 2 dB and repeat step f)1).

3 If the receiver-decoder recognizes the three SCTS, record the attenuation value in decibels, increase the attenuation of (3) by 1 dB, record the new attenuation value in decibels, and proceed to step g)1).

g) 1) Transmit the SCTS a maximum of three times, terminating the transmission sequence, if the receiver-decoder does not recognizes any of its SCTS. Adjust the step attenuator (3) according to step g)2) or g)3), whichever is appropriate.

2) If the receiver-decoder fails to recognize either the first, second or third SCTS, decrease the attenuation of (3) by 1 dB, record the new attenuation value in decibels, and repeat step g)1). See step h).

3) If the receiver-decoder recognizes the three SCTS, increase the attenuation of (3) by 1 dB, record the new attenuation value in decibels, and repeat step g) 1). See step h).

h) Continue steps g)1), g)2) and g)3) until attenuator values have been recorded 10 times.

NOTE – A careful study of the example in figure E.8 of annex E, is recommended to avoid the possibility of misunderstanding steps g) and h).

4.1.1.5 Presentation of results for message or selective calling

a) Calculate the average of the attenuation values recorded in decibels in steps f)3), g)2) and g)3) of 4.1.1.4.

b) The measured usable sensitivity (message or selective calling) is:

$$A - B \quad (\text{dB}(\mu\text{V}))$$

where

A is the value recorded in step c) of 4.1.1.4;

B is the average of the attenuation values calculated in step a) in decibels.

c) Record the input signal arrangement used, characteristics of the SCTS (message or selective calling) and measured usable sensitivity (message or selective calling).

4.1.2 Specified usable sensitivity (SUS) (data)

4.1.2.1 Definition

The radio-frequency level of the standard coded test signal (SCTS) (data) specified by the regulatory authority, manufacturer or customer at the specified frequency, which results in an error ratio equal to or smaller than the reference error ratio (data).

NOTE – To make meaningful measurements, the specified input-signal level should be chosen taking into account the dispersion of the sensitivities of various equipments in defined environmental conditions.

4.1.2.2 Compliance test method – sensitivity (SUS) (data)

a) Connect the equipment as illustrated in figure 4 with the switches in position b, using test equipment items (1) and (2) and a comparator (see 2.7).

Copyright International Electrotechnical Commission
Provided by IHS under license with IEC
No reproduction or networking permitted without license from IHS Not for Resale

b) Adjust the frequency of the radio-frequency signal generator (2) to one of the specified nominal frequencies or to the nominal frequency if this frequency is unique.

c) Using the encoder (1), modulate the radio-frequency signal generator (2) with the standard train of coded test signal (data) or with the specified message or selective call to generate the standard coded test signal (SCTS) (data) (see 2.16, 2.22, 2.23 and 2.24).

d) Adjust the level of the input signal to the receiver-decoder to the value of sensitivity (SUS) (data).

e) Transmit the standard train of SCTS for bit stream or character string (see 2.24), or 18 specified messages or selective calls.

f) If there are 25 or less errors for bit stream or character string, or three or less errors for message or selective calls, record that the receiver-decoder complies with the sensitivity (SUS) (data) specification, otherwise record that it does not comply.

g) Record the input signal arrangement used, characteristics of the SCTS (data) and the sensitivity (SUS) (data).

4.2 Adjacent radio-frequency signal selectivity (data)

4.2.1 General

Selectivity is the ability of a receiver to discriminate between wanted and unwanted input signals.

The selectivity methods of measurement described in this standard deal only with interference that degrades the receiver output signal due to the simultaneous presence of a wanted and an unwanted input-signal. It is to be noted, however, that unwanted signals may also be objectionable when the wanted signal is not present.

The methods of measurement are described in a manner which allows the limit for the selectivity of the receiver to be expressed either as

a) the ratio of the level of the unwanted input signal to the level of the wanted signal, which is set to the SUS (see 4.1.2) plus 3 dB; this is expressed as “selectivity (SUS)”;

or

b) the ratio of the level of the unwanted input-signal level to the value of the sensitivity (MUS) (see 4.1.1), the wanted signal being set 3 dB above the value of the MUS; this is expressed as “selectivity (MUS)”.

Figure 5 illustrates the two methods.

These two methods of measurement are intended to cover different practical applications.

The SUS method is intended to cover the case of mobile radio systems used in environments having a high level of interference (e.g. in areas where the cell size is mainly determined by interference) and where the frequency planning is based on parameters virtually common to all radio systems implemented in that area.

The MUS method is intended to cover the case of mobile radio systems used in environments having a low level of interference (e.g. rural areas), where the actual measured usable sensitivity (MUS) and radio-frequency field coverage are the key factors, together with the overall power budget of the links.

These two methods generally provide different results. In the special case where the sensitivity (MUS) of a particular equipment is equal to the sensitivity (SUS), the level of the wanted and unwanted signals used in both measurements will be the same but the results calculated according to the two methods will differ by 3 dB.

Copyright International Electrotechnical Commission
Provided by IHS under license with IEC
No reproduction or networking permitted without license from IHS Not for Resale

4.2.2 Definition

The ability of the receiver-decoder to minimize the degrading effect of an unwanted adjacent signal on the desired response at the output of the receiver-decoder. It is the ratio, expressed in decibels, of

a) the level of an unwanted input signal that causes a wanted input signal, which is 3 dB in excess of the sensitivity (SUS or MUS) (data), to produce an error ratio equal to the reference error ratio (data), to

b) the wanted signal level (sensitivity (SUS) plus 3 dB), or the sensitivity (MUS) (the wanted signal level is the sensitivity (MUS) plus 3 dB).

4.2.3 Method of measurement for bit stream or character string

NOTE – The value of the sensitivity (MUS or SUS) (bit stream or character string) determined in 4.1.1.3 or defined in 4.1.2.1 is required for this measurement.

a) Connect the equipment as illustrated in figure 4 with the switches in position b. Test equipment items (1), (2), (4), (5) and (6) and a comparator are required (see 2.7). Item (5) is replaced with an unwanted signal encoder.

b) Adjust the frequency of the radio-frequency signal generator (2) to one of the specified nominal frequencies or to the nominal frequency if this frequency is unique.

c) Using the encoder (1) modulate the radio-frequency signal generator (2) with the standard train of standard coded test signal (bit stream or character string) to generate the standard coded test signal (SCTS) (bit stream or character string) (see 2.22, 2.23 and 2.24).

d) In the absence of the unwanted signal, adjust the wanted signal level at the input of the matching and combining network (4) to be 3 dB in excess of the sensitivity (SUS or MUS) (bit stream or character string) determined in 4.2 plus the loss of the matching and combining network (4).

e) Using the encoder (1), modulate radio-frequency generator (6) with the standard unwanted signal (data) to generate the unwanted signal at the upper (“lower” for step j) specified frequency of the adjacent unwanted signal (see 2.25).

   Adjust the level to the input of the matching and combining network (4) to equal the sensitivity (SUS or MUS) (bit stream or character string) multiplied by the ratio of the adjacent radio-frequency signal selectivity (bit stream or character string), stated in the equipment specification plus the loss of the matching and combining network (4).

f) Transmit the standard train of SCTS (see 2.24).

g) Calculate and note the error ratio.

h) If the error ratio equals the reference error ratio (bit stream or character string), terminate the measurement. Record the unwanted radio-frequency signal level, G, in dB(μV), and proceed to step b) of 4.2.4.

   If the error ratio is less than the reference error ratio (bit stream or character string), increase the unwanted signal level by 0,5 dB.

   If the error ratio is greater than the reference error ratio (bit stream or character string), decrease the unwanted signal level by 0,5 dB.

i) Repeat steps e) through h) until two consecutive values of error ratio have been obtained which bracket the reference error ratio (bit stream or character string). Record the unwanted radio-frequency signal level, U, in dB(μV) that corresponds to the error ratio which is just greater than the reference error ratio (bit stream or character string).

j) Repeat steps e) through i) for the lower specified frequency of the adjacent unwanted signal.

NOTE – This method of measurement is suitable for making measurements at other than the specified unwanted signal frequency.

Copyright International Electrotechnical Commission
Provided by IHS under license with IEC
No reproduction or networking permitted without license from IHS Not for Resale

4.2.4 Presentation of results for bit stream or character string

a) Calculate the level of the unwanted radio-frequency, G, as follows:

$$G = U - 0{,}25 \quad (\text{dB}(\mu\text{V}))$$

b) Calculate the upper and the lower adjacent radio-frequency signal selectivities, *S*, either as:

$$S = G - R \text{ (for selectivity MUS)} \quad (\text{dB}); \text{ or}$$

$$S = G - R - 3 \text{ (for selectivity SUS)} \quad (\text{dB})$$

where

G is the value recorded in step h) of 9.3 or in step a) of 9.4;

R is the sensitivity (SUS or MUS) (bit stream or character string) plus the loss of the matching and combining network (4).

c) Record the adjacent radio-frequency signal selectivity (referred to SUS or MUS) (bit stream or character string) as the smaller of the values of *S* calculated above.

d) Record the input signal arrangement used, the characteristics of the SCTS (bit stream or character string), the characteristics of the unwanted signal, the frequencies of the specified unwanted adjacent signals and the sensitivity (SUS or MUS) (bit stream or character string).

4.2.5 Method of measurement for message or selective calling

NOTE – The value of the sensitivity (MUS or SUS) (message or selective calling) determined in 4.1.1.5 or defined in 4.1.2.1 is required for this measurement.

a) Connect the equipment as illustrated in figure 4 with the switches in position b. Test equipment items (1), (2), (4), (5), (6) and (9) and a comparator are required (see 2.7). Item (5) is replaced with an unwanted signal encoder.

b) Adjust the frequency of the radio-frequency signal generator (2) to one of the specified nominal frequencies or to the nominal frequency if this frequency is unique.

c) Using the encoder (1), modulate the radio-frequency signal generator (2) with the reference sequence of messages or selective callings to generate the standard coded test signal (SCTS) (message or selective calling) (see 2.22 and 2.23).

d) In the absence of the unwanted signal, adjust the signal level at the input of the matching and combining network (4) to be 3 dB in excess of the sensitivity (SUS or MUS) (message or selective calling) determined in 4.2 plus the loss of the matching and combining network (4).

e) Using the encoder (1), modulate the radio-frequency generator (6) with the standard unwanted signal (data) to generate the unwanted signal at the upper (“lower” for step j) specified frequency of the adjacent unwanted signal (see 2.25). Apply a high-level signal (e.g. 100 dB(μV)) to the attenuator (9). Record this value, A, in dB(μV).

f) Adjust the step attenuator (9) to a value which will produce a high error ratio (e.g. 50 % or greater).

g) 1) Transmit the SCTS a maximum of three times, terminating the transmission sequence if the receiver-decoder does not recognize any of the SCTS. Adjust the step attenuator (9) according to step g)2) or g)3), whichever is appropriate.

2) If the receiver-decoder fails to recognize either the first, second or third SCTS, increase the attenuation of (9) by 2 dB and repeat step g)1).

3) If the receiver-decoder recognizes the three SCTSs, record the attenuation value in decibels, decrease the attenuation of (9) by 1 dB, record the new attenuation value in decibels, and proceed to step h)1).

Copyright International Electrotechnical Commission
Provided by IHS under license with IEC
No reproduction or networking permitted without license from IHS Not for Resale

h) 1) Transmit the SCTS a maximum of the three times, terminating the transmission sequence if the receiver-decoder does not recognize any of the SCTS. Adjust the step attenuator (9) according to step h)2) or h)3), whichever is appropriate.

2) If the receiver-decoder fails to recognize either the first, second or third SCTS, increase the attenuation of (9) by 1 dB, record the new attenuation value in decibels, and repeat step h)1). See step i).

3) If the receiver-decoder recognizes the three SCTS, decrease the attenuation of (9) by 1 dB, record the new attenuation value in decibels, and repeat step h)1). See step i).

i) Continue steps h)1), h)2) and h)3) until attenuator values have been recorded 20 times.

NOTE – A careful study of the example in figure E.10 of annex E, is recommended to avoid the possibility of misunderstanding step h) and i).

j) Repeat steps e) through i) for the lower specified frequency of the adjacent unwanted signal.

4.2.6 Presentation of results for message or selective calling

a) Calculate the average of the attenuation values recorded in decibels in steps g)3), h)2) and h)3) of 8.5 for the upper frequency of the adjacent unwanted signal.

b) Calculate the average of the attenuation values recorded in decibels in steps g)3), h)2) and h)3) of 8.5 for the lower frequency of the adjacent unwanted signal.

c) Calculate the upper and lower adjacent radio-frequency signal selectivity, S, either as:

$$S = A - B - R \quad \text{(for selectivity MUS)} \quad \text{(dB), or}$$

$$S = A - B - R - 3 \quad \text{(for selectivity SUS)} \quad \text{(dB)}$$

where

A is the value recorded in dB(μV) in step e)of 8.5;

B is the average of the attenuation values calculated in step a) and in step h) in decibels;

R is the sensitivity (SUS or MUS) (message or selective calling) plus the loss of the matching and combining network (4).

d) Record the adjacent radio-frequency signal selectivity (referred to SUS or MUS) (message or selective calling) as the smaller of the values of S calculated above.

e) Record the input signal arrangement used, the characteristics of the SCTS (message or selective calling), the characteristics of the unwanted signal and the frequencies of the specified unwanted adjacent signals and sensitivity (SUS or MUS) (message or selective calling).

4.2.7 Compliance test method – Adjacent radio-frequency signal selectivity (data)

NOTE – The value of the sensitivity (MUS or SUS) (data) determined in 4.1.1.3 or 4.1.1.5 or defined in 4.1.2.1 is required for this measurement.

a) Connect the equipment as illustrated in figure 4 with the switches in position b. Test equipment items (1), (2), (4), (5), (6) and a comparator are required (see 2.7). Item (5) is replaced with an unwanted signal encoder.

b) Adjust the frequency of the radio-frequency signal generator (2) to one of the specified nominal frequencies or to the nominal frequency if this frequency is unique.

c) Using the encoder (1), modulate the radio-frequency signal generator (2) with the standard train of standard coded test signal (data) or with the specified message to generate the standard coded test signal (SCTS) (data) (see 2.16, 2.22, 2.23 and 2.24).

d) Adjust the wanted signal level at the input of the matching and combining network (4) to be 3 dB in excess of the sensitivity (SUS or MUS) (data) determined in 4.1, plus the loss of the matching and combining network (4).

--`,,`,,`-`-`,,`,,`,`,,`---

Copyright International Electrotechnical Commission
Provided by IHS under license with IEC
No reproduction or networking permitted without license from IHS Not for Resale

e) Using the encoder (1), modulate the radio-frequency generator (6) with the standard unwanted signal (data) to generate the unwanted signal at the upper specified adjacent frequency (see 2.25).

f) Adjust the unwanted signal level at the input of the matching and combining network (4) to equal the sensitivity (SUS) plus 3 dB or the sensitivity (MUS), determined in 4.1, increased by the specified value of the adjacent radio-frequency signal selectivity (data) plus the loss of the matching and combining network (4).

g) Transmit the standard train of SCTS for bit stream or character string (see 2.24), or 33 specified messages or selective calls.

h) If there are 25 or less errors for bit stream or character string, or six or less errors for message or selective call, record that for the upper specified frequency the receiver-decoder does comply with the adjacent radio-frequency signal selectivity (data) specification.

i) Repeat steps e) through h) for the lower specified adjacent frequency.

j) If it was recorded in step h) that the receiver-decoder does comply for both specified frequencies, then record that it does comply with the adjacent radio-frequency signal selectivity (data) specification, otherwise record that it does not comply.

k) Record the input signal arrangement used, characteristics of the SCTS (data), the sensitivity (SUS or MUS) (data) and the specified adjacent radio-frequency signal selectivity (data).

4.3 Co-channel interference rejection (data)

Co-channel interference rejection (data) is a special case of adjacent radio-frequency signal selectivity (data). It is measured using the method of measurement given in 4.2 with the frequency of the standard unwanted signal (data) the same as the wanted signal.

4.4 Adjacent-channel selectivity (data)

When mobile radio services use discrete channel spacings, the value of adjacent radio-frequency signal selectivity (data) measured for a signal spacing equal to the discrete channel spacing may be quoted as the value of the adjacent-channel selectivity (data). Adjacent-channel selectivity (data) is measured using the method of measurement given in 4.2, with the frequency of the standard unwanted signal displaced one channel space.

4.5 Spurious response immunity (data)

4.5.1 Definition

The ability of the receiver-decoder to prevent a single unwanted spurious signal from degrading the desired response. It is the ratio, expressed in decibels, of

a) the level of an unwanted input signal that causes a wanted input signal, which is 3 dB in excess of the sensitivity (SUS or MUS) (data), to produce an error ratio equal to the reference error ratio (data), to

b) the wanted signal level (sensitivity (SUS) plus 3 dB), or the sensitivity (MUS) (the wanted signal level is the sensitivity (MUS) plus 3 dB).

4.5.2 Method of measurement for bit stream or character string

NOTE 1 – The value of the sensitivity (MUS or SUS) (bit stream or character string) determined in 4.1.1.3 or defined in 4.1.2.1 is required for this measurement.

a) Connect the equipment as illustrated in figure 4 with the switches in position b. Test equipment items (1), (2), (4) and (6) and a comparator are required (see 2.7).

b) Adjust the frequency of the radio-frequency signal generator (2) to one of the specified nominal frequencies or to the nominal frequency if this frequency is unique.

--`,,`-`-`,,`,,`,`,,`---
Copyright International Electrotechnical Commission
Provided by IHS under license with IEC
No reproduction or networking permitted without license from IHS Not for Resale

c) Using the encoder (1), modulate radio-frequency signal generator (2) with the standard train of standard coded test signal (bit stream or character string) to generate the standard coded test signal (SCTS) (bit stream or character string) (see 2.22, 2.23 and 2.24).

d) In the absence of the unwanted signal, adjust the signal level at the input of the matching and combining network (4) to be 3 dB in excess of the sensitivity (SUS or MUS) (bit stream or character string) determined in 4.2 plus the loss of the matching and combining network (4).

e) Adjust the radio-frequency generator (6) to a frequency that may degrade the response of the receiver-decoder. Note the unwanted signal frequency (see 2.25).

Adjust the level to the input of the matching and combining network (4) to equal the sensitivity (SUS or MUS) (bit stream or character string), multiplied by the ratio of the spurious response immunity (bit stream or character string), stated in the equipment specification, plus the loss of the matching and combining network (4).

NOTE 2 – The method of measurement of spurious response immunity requires that the operator search for the frequencies of the unwanted signals which may degrade the output of the receiver (e.g. signal-to-noise ratio or error ratio). When the receiver has an audio output, this is normally done by applying only the unwanted signal to the receiver at a high level. Then the frequency of the unwanted signal is slowly moved across the frequency band of interest and the frequencies that produce a change in the signal-to-noise ratio are noted. These frequencies are then used in the spurious response immunity method of measurement.

If the receiver-decoder does not have an audio output, other methods for making the search should be used. One method of making the search is to use a sensitive detector (e.g. a communication receiver tuned to the intermediate frequency of the receiver-decoder) and a pick-up (antenna) which may also be tuned to the intermediate frequency. By placing the pick-up near the later stages of the intermediate frequency amplifier, the activity of this amplifier can be monitored. When the above procedure is used, changes in the signal in the intermediate frequency amplifier can be detected and the frequency of the unwanted signal noted.

f) Transmit the standard train of SCTS (see 2.24).

g) Calculate and note the error ratio.

h) If the error ratio equals the reference error ratio (bit stream or character string), terminate the measurement. Record the unwanted radio-frequency signal level, G, in dB(μV), and proceed to step b) of 4.5.3.

If the error ratio is less than the reference error ratio (bit stream or character string), increase the unwanted signal level by 0,5 dB.

If the error ratio is greater than the reference error ratio (bit stream or character string), decrease the unwanted signal level by 0,5 dB.

i) Repeat steps f) through h) until two consecutive values of error ratio have been obtained which bracket the reference error ratio (bit stream or character string). Record the unwanted radio-frequency signal level, U in dB(μV), that corresponds to the error ratio which is just greater than the reference error ratio (bit stream or character string).

j) Repeat steps d) through i) for other unwanted signal frequencies that may degrade the response of the receiver-decoder.

4.5.3 Presentation of results for bit stream or character string

a) Calculate the radio-frequency level G, as follows:

$$G = U - 0{,}25 \quad \text{dB}(\mu\text{V})$$

where

U is the value recorded in step i) of 4.5.2.

b) Calculate the spurious response immunity, S, for each of the unwanted signals, either as:

$$S = G - R \quad \text{(for immunity MUS)} \quad \text{(dB), or}$$

$$S = G - R - 3 \quad \text{(for immunity SUS)} \quad \text{(dB)}$$

where

G is the value recorded in step h) of 4.5.2 or in step a) of 4.5.3.

Copyright International Electrotechnical Commission
Provided by IHS under license with IEC
No reproduction or networking permitted without license from IHS Not for Resale

R is the sensitivity (SUS or MUS) (bit stream or character string) plus the loss of the matching and combining network (4).

c) Record the spurious response immunity (referred to SUS or MUS) (bit stream or character string) as the smaller of the values of *S* calculated above.

d) Record the input signal arrangement used, the characteristics of the SCTS (bit stream or character string), the characteristics of the unwanted signal, the frequencies of the specified unwanted adjacent signals and the sensitivity (SUS or MUS) (bit stream or character string).

4.5.4 Method of measurement for message or selective calling

NOTE 1 – The value of the sensitivity (MUS or SUS) (message or selective calling) determined in 4.1.1.5 or defined in 4.1.2.1 is required for this measurement.

a) Connect the equipment as illustrated in figure 4 with the switches in position b. Test equipment items (1), (2), (4), (6) and (9) and a comparator are required (see 2.7).

b) Adjust the frequency of the radio-frequency signal generator (2) to one of the specified nominal frequencies or to the nominal frequency if this frequency is unique.

c) Using the encoder (1), modulate radio-frequency signal generator (2) with the reference sequence of messages or selective calls to generate the standard coded test signal (SCTS) (message or selective calling) (see 2.22 and 2.23).

d) In the absence of the unwanted signal, adjust the signal level at the input of the matching and combining network (4) to be 3 dB in excess of the sensitivity (SUS or MUS) (message or selective calling) determined in 4.2, plus the loss of the matching and combining network (4).

e) Adjust the radio-frequency generator (6) to a frequency that may degrade the response of the receiver-decoder and apply a high level signal (e.g. 100 dB(μV)) to the attenuator (9) (see 2.25). Record this value in dB(μV) as A. Record this frequency.

NOTE 2 – The method of measurement of spurious response immunity requires that the operator search for the frequencies of the unwanted signals which may degrade the output of the receiver (e.g. signal-to-noise ratio or error ratio). When the receiver has an audio output, this is normally done by applying only the unwanted signal to the receiver at a high level. Then the frequency of the unwanted signal is slowly moved across the frequency band of interest and the frequencies that produce a change in the signal-to-noise ratio are noted. These frequencies are then used in the spurious response immunity method of measurement.

If the receiver-decoder does not have an audio output, other methods for making the search should be used. One method of making the search is to use a sensitive detector (for example, a communication receiver tuned to the intermediate frequency of the receiver-decoder) and a pick-up (antenna) which may also be tuned to the intermediate frequency. By placing the pick-up near the later stages of the intermediate frequency amplifier the activity of this amplifier can be monitored. When the above procedure is used, changes in the signal in the intermediate frequency amplifier can be detected and the frequency of the unwanted signal noted.

f) Adjust the step attenuator (9) to a value which will produce a high error ratio (e.g. 50 % or greater).

g) 1) Transmit the SCTS a maximum of three times, terminating the transmission sequence if the receiver-decoder does not recognize any of its STS. Adjust the step attenuator (9) according to step g)2) or g)3), whichever is appropriate.

2) If the receiver-decoder fails to recognize either the first, second or third SCTS, increase the attenuation of (9) by 2 dB and repeat step g)1).

3) If the receiver-decoder recognizes the three SCTS, record the attenuation value in decibels, decrease the attenuation of (9) by 1 dB, record the new attenuation value in decibels, and proceed to step h)1).

h) 1) Transmit the SCTS a maximum of three times, terminating the transmission sequence if the receiver-decoder does not recognize any of its SCTS. Adjust the step attenuator (9) according to step h)2) or h)3), whichever is appropriate.

2) If the receiver-decoder fails to recognize either the first, second or third SCTS, increase the attenuation of (9) by 1 dB, record the new attenuation value in decibels, and repeat step h)1). See step i).

3) If the receiver-decoder recognizes the three SCTS decrease the attenuation of (9) by 1 dB, record the new attenuation value in decibels, and repeat step h)1). See step i).

Copyright International Electrotechnical Commission
Provided by IHS under license with IEC
No reproduction or networking permitted without license from IHS Not for Resale

i) Continue steps h)1), h)2) and h)3) until attenuator values have been recorded 20 times.

NOTE 3 – A careful study of the example in figure E.10 of annex E is recommended to avoid the possibility of misunderstanding steps g) and h).

j) Repeat steps e) through i) using other unwanted signal frequencies that may degrade the response of the receiver-decoder.

4.5.5 Presentation of results for message or selective calling

a) Calculate the average of the attenuation values recorded in decibels in steps g)3), h)2) and h)3) of 4.5.4 for each of the unwanted signals.

b) Calculate the spurious response immunity (message or selective calling), *S*, for each of the unwanted signals, either as:

$$S = A - B - R \quad \text{(for immunity MUS)} \quad \text{(dB), or}$$

$$S = A - B - R - 3 \quad \text{(for immunity SUS)} \quad \text{(dB)}$$

where

A is the value recorded in step e) of 4.5.4;

B is the average of the attenuation values calculated in step a) in decibels;

R is the sensitivity (SUS or MUS) (message or selective calling) plus the loss of the matching and combining network (4).

c) Record the spurious response immunity (referred to SUS or MUS) (message or selective calling) as the smaller of the values of S calculated above.

d) Record the input signal arrangement used, the characteristics of the SCTS (message or selective calling), the characteristics of the unwanted signal, the frequencies of the unwanted signals and the sensitivity (SUS or MUS) (message or selective calling).

4.5.6 Compliance test method – Spurious response immunity (data)

NOTE 1 – The value of the sensitivity (MUS or SUS) (data) determined in 4.1.1.3 or 4.1.1.5 or defined in 4.1.2.1 is required for this measurement.

a) Connect the equipment as illustrated in figure 4 with the switches in position b, using test equipment items (1), (2), (4) and (6) and a comparator (see 2.7).

b) Adjust the frequency of the radio-frequency signal generator (2) to one of the specified nominal frequencies or to the nominal frequency if this frequency is unique.

c) Using the encoder (1), modulate radio-frequency signal generator (2) with the standard train of standard coded test signal (data) or with the specified message to generate the standard coded test signal (SCTS) (data) (see 2.16, 2.22, 2.23 and 2.24).

d) Adjust the wanted signal level at the input of the matching and combining network (4) to be 3 dB in excess of the sensitivity (SUS or MUS) (data) determined in 4.2, plus the loss of the matching and combining network (4).

e) Adjust the radio-frequency generator (6) to a frequency that may degrade the response of the receiver-decoder. Note the unwanted signal frequency (see 2.25).

NOTE 2 – The method of measurement of spurious response immunity requires that the operator search for the frequencies of the unwanted signals which may degrade the output of the receiver (e.g. signal-to-noise ratio or error ratio). When the receiver has an audio output, this is normally done by applying only the unwanted signal to the receiver at a high level. Then the frequency of the unwanted signal is slowly moved across the frequency band of interest and the frequencies that produce a change in the signal-to-noise ratio are noted. These frequencies are then used in the spurious response immunity method of measurement.

--`,,`,,`-`-`,,`,,`,`,,`---

Copyright International Electrotechnical Commission
Provided by IHS under license with IEC
No reproduction or networking permitted without license from IHS Not for Resale

If the receiver-decoder does not have an audio output, other methods for making the search shall be used. One method of making the search is to use a sensitive detector (e.g. a communication receiver tuned to the i.f. frequency of the receiver) and a pick-up (antenna) which may also be tuned to the i.f. frequency. By placing the pick-up near the later stages of the i.f. amplifier, the activity of the i.f. amplifier can be monitored. When the above procedure is used, changes in the signal in the i.f. amplifier can be detected and the frequency of the unwanted signal noted.

f) Adjust the unwanted signal level at the input of the matching and combining network (4) to equal the sensitivity (SUS) + 3 dB or the sensitivity (MUS) (data), determined in 4.2, increased by the specified value of the spurious response immunity (data) plus the loss of the matching and combining network (4).

g) Transmit the standard train of SCTS for bit stream or character string (see 2.24), or 33 specified messages or selective calls.

h) If there are 25 or less errors for bit stream or character string, or six or less errors for message or selective call, record that the receiver-decoder does comply for this unwanted frequency with the spurious response immunity (data) specification.

i) Repeat steps e) through h) for other unwanted signal frequencies that may degrade the response of the receiver-decoder.

j) If it was recorded in step h) for all of the unwanted frequencies selected in step e) that the receiver-decoder did comply, then record that the receiver-decoder does comply with the spurious response immunity (data) specification, otherwise record that it does not comply.

k) Record the input signal arrangement used, characteristics of the SCTS (data), sensitivity (SUS or MUS) (data) and specified spurious response immunity (data).

4.6 Intermodulation immunity (data)

4.6.1 Definition

The ability of the receiver-decoder to prevent two unwanted adjacent signals which have specific frequency relationships to the wanted signal frequency (see annex D), from degrading the desired response of the receiver-decoder. It is the ratio, expressed in decibels, of

a) the common level of two unwanted input signals that cause a wanted input signal, which is 3 dB in excess of the sensitivity (SUS or MUS) (data), to produce an error ratio equal to the reference error ratio (data), to

b) the wanted signal level (sensitivity (SUS) plus 3 dB), or the sensitivity (MUS) (the wanted signal level is the sensitivity (MUS) plus 3 dB).

4.6.2 Method of measurement for bit stream or character string

NOTE – The value of the sensitivity (MUS or SUS) (bit stream or character string) determined in 4.1.1.3 or defined in 4.1.2.1 is required for this measurement.

a) Connect the equipment as illustrated in figure 4 with the switches in position b. Test equipment items (1), (2), (4), (6), (7), (8) and (9) and a comparator are required (see 2.7). Step attenuator (9) will need 0,5 dB steps.

   Matching and combining networks (4) and (7) have two inputs and may not have identical losses for each of the inputs. If there is a difference in the losses, it should be accounted for in the calculation of the intermodulation immunity (bit stream or character string).

b) Adjust the frequency of the radio-frequency signal generator (2) to one of the specified nominal frequencies or to the nominal frequency if this frequency is unique.

c) Using the encoder (1), modulate the radio-frequency signal generator (2) with the standard train of coded test signal (bit stream or character string) to generate the standard coded test signal (SCTS) (bit stream or character string) (see 2.22, 2.23 and 2.24).

d) In the absence of the unwanted signal, adjust the signal level at the input of the matching and combining network (4) to be 3 dB in excess of the sensitivity (SUS or MUS) (bit stream or character string) determined in 4.2 plus the loss of the matching and combining network (4).

Copyright International Electrotechnical Commission
Provided by IHS under license with IEC
No reproduction or networking permitted without license from IHS Not for Resale

e) Choose a pair of frequencies, f_n and f_r, that may produce an intermodulation response (see annex D). Record these frequencies.

f) Adjust the attenuator (9) to 8 dB.

g) Adjust the frequency of the radio-frequency generator (6) to f_n and the radio-frequency generator (8) to f_r.

Adjust the levels of the unwanted signals f_n and f_r to the input of matching and combining network (7) to equal the sensitivity (SUS or MUS) (bit stream or character string) multiplied by the ratio of the intermodulation immunity (bit stream or character string), stated in the equipment specification plus the losses of matching and combining networks (7) and (4) plus 8 dB. Record this value as G in dB(μV).

h) Transmit the standard train of SCTS (see 2.24).

i) Calculate and note the error ratio.

j) If the error ratio equals the reference error ratio (bit stream or character string), terminate the measurement. Record the attenuation value of the attenuator (9), C, and proceed to step b) of 4.6.3.

If the error ratio is less than the reference error ratio (bit stream or character string) decrease the attenuation of (9) by 0,5 dB.

If the error ratio is greater than the reference error ratio (bit stream or character string), increase the attenuation of (9) by 0,5 dB.

k) Repeat steps h) through j) until two consecutive values of error ratio have been obtained which bracket the reference error ratio (bit stream or character string). Record the attenuation value of attenuator (9), A, that corresponds to the error ratio which is just greater than the reference error ratio (bit stream or character string).

l) Repeat steps d) through k) using other pairs of unwanted signal frequencies that may produce an intermodulation response.

4.6.3 Presentation of results for bit stream or character string

a) Calculate the attenuation, C, for each of the unwanted pairs of frequencies as:

$$C = A + 0{,}25 \quad \text{(dB)}$$

where

A is the attenuation value of the attenuator (9) recorded in step k) or l) of 4.6.2.

b) The intermodulation immunity, S, for each of the unwanted pairs of frequencies is either as:

$$S = G - L - C - R \quad \text{(for immunity MUS)} \quad \text{(dB), or}$$

$$S = G - L - C - R - 3 \,\text{(for immunity SUS)} \quad \text{(dB)}$$

where

C is the value recorded in step j) of 4.6.2 or calculated in step a);

G is the unwanted input-signal level of matching and combining network (7) in dB(μV) recorded in step g) of 4.6.2;

L is the loss of matching and combining network (7) in decibels;

R is the sensitivity (SUS or MUS) (bit stream or character string) plus the loss of the matching and combining network (4).

c) Record the intermodulation immunity (referred to SUS or MUS) (bit stream or character string) as the smaller of the values of S calculated in step b).

d) Record the input signal arrangement used, the characteristics of the SCTS (bit stream or character string), the characteristics of the unwanted signals, the frequencies of the unwanted signals and the sensitivity (SUS or MUS) (bit stream or character string).

Copyright International Electrotechnical Commission
Provided by IHS under license with IEC
No reproduction or networking permitted without license from IHS Not for Resale

4.6.4 Method of measurement for message or selective calling

NOTE 1 – The value of the sensitivity (MUS or SUS) (message or selective calling) determined in 4.1.1.5 or defined in 4.1.2.1 is required for this measurement.

a) Connect the equipment as illustrated in figure 4 with the switches in position b. Test equipment items (1), (2), (4), (6), (7), (8) and (9) and a comparator are required (see 2.7).

Matching and combining networks (4) and (7) have two inputs and may not have identical losses for each of the inputs. If there is a difference in the losses it must be accounted for in the calculation of the intermodulation immunity (message or selective calling).

b) Adjust the frequency of the radio-frequency signal generator (2) to one of the specified nominal frequencies or to the nominal frequency if this frequency is unique.

c) Using the encoder (1), modulate the radio-frequency signal generator (2) with the reference sequence of messages to generate the standard coded test signal (SCTS) (message or selective calling) (see 2.22 and 2.23).

d) In the absence of the unwanted signal, adjust the signal level at the input of the matching and combining network (4) to be 3 dB in excess of the sensitivity (SUS or MUS) (message or selective calling) determined in 4.1, plus the loss of the matching and combining network (4).

e) Choose a pair of frequencies, f_n and f_r, that may produce an intermodulation response (see annex D). Record these frequencies.

f) Adjust the frequency of radio-frequency generator (6) to f_n and radio-frequency generator (8) to f_r. Adjust the output of each of the generators to apply the same high signal level (e.g. 100 dB(μV)) to the matching and combining network (7). Record this level, A, in dB(μV).

g) Adjust the step attenuator (9) to a value which will produce a high error ratio (e.g. 50 % or greater).

h) 1) Transmit the SCTS a maximum of three times, terminating the transmission sequence. Adjust the step attenuator (9) according to step h)2) or h)3), whichever is appropriate.

2) If the receiver-decoder fails to recognize either the first, second or third SCTS, increase the attenuation of (9) by 2 dB and repeat step h)1).

3) If the receiver-decoder recognizes the three SCTS, record the attenuation value in decibels, reduce the attenuation of (9) by 1 dB, record the new attenuation value in decibels, and proceed to step i)1).

i) 1) Transmit the SCTS a maximum of three times, terminating the transmission sequence. Adjust the step attenuator (9) according to step i)2) or i)3), whichever is appropriate.

2) If the receiver-decoder fails to recognize either the first, second or third SCTS, increase the attenuation of (9) by 1 dB, record the new attenuation value in decibels, and repeat step i)1). See step j).

3) If the receiver-decoder recognizes the three SCTS, reduce the attenuation of (9) by 1 dB, record the new attenuation value in decibels, and repeat step i)1). See step j).

j) Continue steps i)1), i)2), and i)3) until attenuator values have been recorded 20 times.

NOTE 2 – A careful study of the example in figure E.10 of annex E is recommended to avoid the possibility of misunderstanding steps h) and i).

k) Repeat steps e) through j) using other pairs of unwanted signal frequencies that may degrade the response of the receiver-decoder.

4.6.5 Presentation of results for message or selective calling

a) Calculate the average of the attenuation values recorded in decibels in steps h)3), i)2) and i)3) of 4.7.4 for each of the pairs of unwanted signals.

b) Calculate the intermodulation immunity, S, for each of the unwanted signals, either as:

$$S = A - B - D - R \quad \text{(for immunity MUS)} \quad \text{(dB), or}$$

Copyright International Electrotechnical Commission
Provided by IHS under license with IEC
No reproduction or networking permitted without license from IHS Not for Resale

$$S = A - B - D - R - 3 \quad \text{(for immunity SUS)} \quad \text{(dB)}$$

where

A is the value recorded in step f) of 4.6.4;

B is the average of the attenuation values calculated in step a) in decibels;

D is the loss of the combining network (7) in decibels;

R is the sensitivity (SUS or MUS) (message or selective calling) plus the loss of the matching and combining network (4)

c) Record the intermodulation immunity (referred to SUS or MUS) (message or selective calling) as the smaller of the values of *S* calculated above.

d) Record the input signal arrangement used, the characteristics of the SCTS (message or selective calling), the characteristics of the unwanted signal, the frequencies of the unwanted signals and the sensitivity (SUS or MUS) (message or selective calling).

4.6.6 Compliance test method – Intermodulation immunity (data)

NOTE 1 – The value of the sensitivity (MUS or SUS) (data) determined in 4.1.1.3 or 4.1.1.5 or defined in 4.1.2.1 is required for this measurement.

a) Connect the equipment as illustrated in figure 4 with the switches in position b, using test equipment items (1), (2), (4), (6), (7) and (8), and a comparator (see 2.7).

NOTE 2 – Matching and combining networks (4) and (7) have two inputs and may not have identical losses for each of the inputs. If there is a difference in the losses it should be accounted for in determining the levels of the unwanted signals.

b) Adjust the frequency of the radio-frequency signal generator (2) to one of the specified nominal frequencies or to the nominal frequency if this frequency is unique.

c) Using the encoder (1), modulate the radio-frequency generator (2) with the standard train of standard coded test signal (data) or with the specified message to generate the standard coded test signal (SCTS) (data) (see 2.16, 2.22, 2.23 and 2.24).

d) Adjust the wanted signal level at the input of the matching and combining network (4) to be 3 dB in excess of the sensitivity (SUS or MUS) (data) determined in 4.1, plus the loss of the matching and combining network (4).

e) Choose a pair of frequencies, f_n and f_r, that may produce an intermodulation response (see annex D). Record these frequencies.

f) Adjust the frequency of the radio-frequency generator (6) to f_n and the radio-frequency generator (8) to f_r.

g) Adjust the unwanted signal levels of f_n and f_r at the input of matching and combining network (7) to equal the sensitivity (SUS) plus 3 dB or the sensitivity (MUS) determined in 4.2, increased by the specified value of the intermodulation immunity (data), plus the losses of matching and combining networks (7) and (4).

h) Transmit the standard train of SCTS for bit stream or character string (see 2.24), or 33 specified messages or selective calls.

i) If there are 25 or less errors for bit stream or character string, or six or less errors for message or selective call, record that the receiver-decoder for this pair of unwanted frequencies does comply with the intermodulation immunity (data) specification.

j) Repeat steps e) through i) for other unwanted frequency pairs that may degrade the response of the receiver-decoder.

k) If it was recorded in step j) for all of the unwanted frequency pairs selected in step e) that the receiver-decoder did comply, then record that the receiver-decoder does comply with the intermodulation immunity (data) specification, otherwise record that it does not comply.

l) Record the input signal arrangement used, characteristics of the SCTS (data), the sensitivity (SUS or MUS) (data) and the specified intermodulation immunity (data).

--`,,`,,`-`-`,,`,,`,`,,`---
Copyright International Electrotechnical Commission
Provided by IHS under license with IEC
No reproduction or networking permitted without license from IHS
Not for Resale

4.7 Sensitivity under multipath propagation conditions (data)

Variations of amplitude and phase of a radio-frequency signal are created by multipath reflections in the propagation medium whenever the transmitting or receiving antennas are in motion. These signal variations are a function of both the antenna velocity and the radio-frequency of the desired signal.

The resulting variations of signal amplitude and phase show a Rayleigh distribution in limited areas where the direct signal is missing. They can be simulated by an appropriate method of modulating both the envelope and phase.

4.7.1 Measured usable sensitivity under multipath propagation conditions (MUSM) (data)

4.7.1.1 Definition

The r.m.s. value of a Rayleigh faded input-signal level that produces the reference error ratio (data). The input signal is the standard coded test signal (SCTS) (data), at a specified frequency.

NOTE – The median value of the envelope is 1,6 dB less than the r.m.s. value.

4.7.1.2 Method of measurement for bit stream or character string

a) Connect the equipment as illustrated in figure 6 (see annex C for details of the Rayleigh fading simulator). A comparator is also needed (see 2.7).

b) Adjust the frequency of the radio-frequency signal generator (2) to one of the specified nominal frequencies or to the nominal frequency if this frequency is unique.

c) Using the encoder (1), modulate the radio-frequency signal generator (2) with the standard train of standard coded test signal (bit stream or character string) to generate the standard coded test signal (SCTS) (bit stream or character string) (see 2.22, 2.23 and 2.24).

d) Adjust the Rayleigh fading simulator (3) for a velocity of 100 km/h if the receiver-decoder under test is mobile, or 10 km/h if the receiver-decoder under test is portable.

e) Record the r.m.s. value of the output signal, *J*, of the Rayleigh fading simulator in dB(μV).

f) Adjust the attenuator (4) to produce a radio-frequency input-signal level to the input of the receiver-decoder, equal to the sensitivity under multipath propagation conditions (SUSM) (bit stream or character string) as stated in the equipment specification to the nearest decibel.

g) Transmit the standard train of SCTS (see 2.24).

h) Calculate and note the error ratio.

i) If the error ratio equals the reference error ratio (bit stream or character string), terminate the measurement. Record the attenuation, *M*, of step attenuator (4) and proceed to step b) of 4.7.1.3.

   If the error ratio is less than reference error ratio (bit stream or character string), increase the attenuation by 1 dB.

   If the error ratio is greater than the reference error ratio (bit stream or character string), decrease the attenuation by 1 dB.

j) Repeat steps g) through i) until two consecutive values of error ratio have been obtained which bracket the reference error ratio (bit stream or character string). Record the value of attenuation, *A*, that corresponds to the error ratio which is just greater than the reference error ratio (bit stream or character string).

k) Repeat steps d) through j) for velocities of 50 km/h, 20 km/h and 10 km/h if the receiver-decoder under test is mobile, or 5 km/h, 2 km/h and 1 km/h if the receiver-decoder under test is portable.

Copyright International Electrotechnical Commission
Provided by IHS under license with IEC
No reproduction or networking permitted without license from IHS Not for Resale

4.7.1.3 Presentation of results for bit stream or character string

a) Calculate the attenuator values, *M*, for the three velocities as

$$M = A - 0{,}5 \quad \text{(dB)}$$

where

A is the attenuation recorded in step j) of 4.7.1.2.

b) Calculate the sensitivity under multipath propagation conditions (bit stream or character string), *S*, in decibels, for each velocity using

$$S = J - M \quad \text{(dB)}$$

where

J is the r.m.s. level of the output of the Rayleigh fading simulator in dB(μV), recorded in step e) of 4.7.1.2

M is the value recorded in step i) of 4.7.1.2 or calculated in step a) in decibels.

c) Record the input signal arrangement used, the characteristics of the SCTS (bit stream or character string), the velocities and the sensitivity under multipath propagation conditions (MUSM) (bit stream or character string).

4.7.1.4 Method of measurement for message or selective calling

a) Connect the equipment as illustrated in figure 6 (see annex C for details of the Rayleigh fading simulator). A comparator is also needed (see 2.7)

b) Adjust the frequency of the radio-frequency signal generator (2) to one of the specified nominal frequencies or to the nominal frequency if this frequency is unique.

c) Using the encoder (1), modulate the radio-frequency signal generator (2) with the reference sequence of messages to generate the standard coded test signal (SCTS) (message or selective calling) (see 2.22 and 2.23).

d) Adjust the Rayleigh fading simulator (3) for a velocity of 100 km/h if the receiver-decoder under test is mobile, or 10 km/h if the receiver-decoder under test is portable.

e) Record the r.m.s. value of the output signal, *J*, of the Rayleigh fading simulator in dB(μV).

f) Adjust the attenuator (4) to a value which will produce a high error ratio (e.g. 50 % or greater).

g) 1) Transmit the SCTS a maximum of three times, terminating the transmission sequence, if the receiver-decoder does not recognize any of its SCTS. Adjust the step attenuator (4) according to step g)2) or g)3), whichever is appropriate.

2) If the receiver-decoder fails to recognize either the first, second or third SCTS, reduce the attenuation of (4) by 2 dB and repeat step g)1).

3) If the receiver-decoder recognizes the three SCTS, record the attenuation value in decibels, increase the attenuation of (4) by 1 dB, record the new attenuation value in decibels, and proceed to step h)1).

h) 1) Transmit the SCTS a maximum of three times, terminating the transmission sequence, if the receiver-decoder does not recognize any of its SCTS. Adjust the step attenuator (4) according to step h)2) or h)3), whichever is appropriate.

2) If the receiver-decoder fails to recognize either the first, second or third SCTS, reduce the attenuation of (4) by 1 dB, record the new attenuation value in decibels, and repeat step h)1). See step i).

3) If the receiver-decoder recognizes the three SCTS, increase the attenuation of (4) by 1 dB, record the new attenuation value in decibels, and repeat step h)1). See step i).

i) Continue steps h)1), h)2) and h)3) until attenuator values have been recorded 20 times.

NOTE – A careful study of the example in figure E.10 of annex E is recommended to avoid the possibility of misunderstanding steps g) and h).

--`,,`,,`-`-`,,`,,`,`,,`---
Copyright International Electrotechnical Commission
Provided by IHS under license with IEC
No reproduction or networking permitted without license from IHS Not for Resale

j) Repeat steps d) through i) for velocities of 50 km/h, 20 km/h and 10 km/h if the receiver-decoder under test is mobile, or 5 km/h, 2 km/h and 1 km/h if the receiver-decoder under test is portable.

4.7.1.5 Presentation of results for message or selective calling

a) Calculate the average of the attenuation values recorded in decibels in steps g)3), h)2) and h)3) of 4.7.1.4 for each velocity.

b) The sensitivity under multipath propagation conditions (message or selective calling), *S*, is given by

$$S = J - B \quad \text{(dB)}$$

where

J is the value recorded in step e) of 4.7.1.4;

B is the average of the attenuation values calculated in step a) in decibels.

c) Record the input signal arrangement used, the characteristics of the SCTS (message or selective calling), the velocities and the sensitivity under multipath propagation conditions (MUSM) (message or selective calling).

4.7.2 Specified usable sensitivity under multipath propagation conditions (SUSM) (data)

4.7.2.1 Definition

The r.m.s. value of a Rayleigh faded input-signal level of the standard coded test signal (SCTS) (data) specified by the Regulatory Authority, manufacturer or customer at the specified frequency, which results in an error ratio equal to or smaller than the reference error ratio (data).

NOTE 1 – To make meaningful measurements, the specified input-signal level should be chosen taking into account the dispersion of the sensitivities of various equipments in defined environmental conditions.

NOTE 2 – The median value of the envelope is 1,6 dB less than the r.m.s. value.

4.7.2.2 Compliance test method – Sensitivity under multipath propagation conditions (SUSM) (data)

a) Connect the equipment as illustrated in figure 6 and include a comparator (see annex C for details of the Rayleigh fading simulator and 2.7 for the comparator).

b) Adjust the frequency of the radio-frequency signal generator (2) to one of the specified nominal frequencies or to the nominal frequency if this frequency is unique.

c) Using the encoder (1), modulate the radio-frequency signal generator (2) with the standard train of coded test signal (data) or with the specified message or selective call to generate the standard coded test signal (data) (SCTS) (see 2.16, 2.22, 2.23 and 2.24)

d) Adjust the Rayleigh fading simulator (3) for a velocity of 100 km/h if the receiver-decoder under test is a mobile, or 10 km/h if the receiver-decoder under test is a portable.

e) Record the r.m.s. value of the output signal, *J*, of the Rayleigh fading simulator in dB(μV).

f) Adjust the attenuator (4) to produce a radio-frequency input level at the input of the receiver-decoder, equal to the sensitivity under multipath propagation conditions (SUSM) (data).

g) Transmit the standard train of SCTS for bit stream or character string (see 2.24), or 78 specified messages or selective calls.

h) If there are 25 or less errors for bit stream or character string, or 15 or less errors for message or selective call, record that the receiver decoder does comply for this velocity with the specified sensitivity reduction under multipath propagation conditions (data) specification.

Copyright International Electrotechnical Commission
Provided by IHS under license with IEC
No reproduction or networking permitted without license from IHS Not for Resale

i) Repeat steps d) through h) for velocities of 50 km/h, 20 km/h and 10 km/h if the receiver-decoder under test is a mobile, or 5 km/h, 2 km/h and 1 km/h if the receiver-decoder under test is a portable.

j) If it was recorded in step h) for all the velocities selected in step d) that the receiver-decoder did comply, then record that the receiver-decoder does comply with the specified usable sensitivity under multipath propagation conditions (SUSM) (data) specification, otherwise record that it does not comply.

k) Record the characteristics of the SCTS (data) and the specified sensitivity under multipath propagation conditions (SUSM) (data).

4.8 Acceptable radio-frequency displacement (data)

4.8.1 Definition

The ability of a receiver-decoder to minimize the degradation of the desired response of the receiver-decoder when the input signal frequency is displaced from the specified nominal frequency.

It is the smaller of the two possible radio-frequency displacements that causes an input signal, which is 6 dB in excess of the sensitivity (SUS or MUS) (data) to produce an error ratio equal to the reference error ratio (data).

NOTE 1 – Radio-frequency displacement is an absolute value and an increase in the displacement moves the radio-frequency away from the nominal frequency.

NOTE 2 – Measured values with bit stream, character string or message may differ from each other in accordance with the construction of the character or the message.

4.8.2 Method of measurement for bit stream or character string

NOTE – The value of the sensitivity (MUS or SUS) (bit stream or character string) determined in 7.1.3 or defined in 7.2.1 is required for this measurement.

a) Connect the equipment as illustrated in figure 4 with the switches in position b. Test equipment items (1) and (2) and a comparator are required (see 2.7).

b) Adjust the frequency of the radio-frequency signal generator (2) to one of the specified nominal frequencies or to the nominal frequency if this frequency is unique.

c) Using the encoder (1), modulate the radio-frequency signal generator (2) with the standard train of coded test signal (bit stream or character string) to generate the standard coded test signal (SCTS) (bit stream or character string) (see 2.22, 2.23, and 2.24).

d) Adjust the level of the input signal to the receiver-decoder to a value 6 dB in excess of the sensitivity (SUS or MUS) (bit stream or character string), determined in 4.1.

e) Adjust the input signal frequency displacement to the value of the acceptable radio-frequency displacement (bit stream or character string) stated in the equipment specification.

f) Transmit the standard train of SCTS (see 2.24).

g) Calculate and note the error ratio.

h) If the error ratio equals the reference error ratio (bit stream or character string), terminate the measurement. Record the radio-frequency displacement, *F*, as the acceptable radio-frequency displacement (SUS or MUS) (bit stream or character string), and proceed to step b) of 4.8.3.

   If the error ratio is less than the reference error ratio (bit stream or character string), increase the frequency displacement by 100 Hz.

   If the error ratio is greater than the reference error ratio (bit stream or character string), decrease the frequency displacement by 100 Hz.

i) Repeat steps f) through h) until two consecutive values of error ratio have been obtained which bracket the reference error ratio (bit stream or character string). Record the frequency displacement, *D*, that corresponds to the error ratio which is just greater than the reference error ratio (bit stream or character string).

Copyright International Electrotechnical Commission
Provided by IHS under license with IEC
No reproduction or networking permitted without license from IHS Not for Resale

j) Repeat steps e) through i) for the frequency displacement on the other side of the specified nominal frequency.

4.8.3 Presentation of results for bit stream or character string

a) Calculate the upper and lower radio-frequency displacement, *F*, as

$$F = D - 50 \quad \text{(Hz)}$$

where

D is the magnitude of the frequency displacement recorded in step i) or j) of 4.9.2.

b) The acceptable radio-frequency displacement (SUS or MUS) is the smallest value of *F*.

c) Record the input signal arrangement used, characteristics of the SCTS (bit stream or character string) and the acceptable radio-frequency displacement (referred to SUS or MUS) (bit stream or character string).

NOTE – This method of measurement is suitable for making measurements at levels other than the 6 dB increase per step d) of 4.8.2

4.8.4 Method of measurement for message or selective calling

NOTE – The value of the sensitivity (MUS or SUS) (message or selective calling) determined in 7.1.5 or defined in 7.2.1 is required for this measurement.

a) Connect the equipment as illustrated in figure 4 with the switches in position b. Test equipment items (1) and (2) and a comparator are required (see 2.7).

b) Adjust the frequency of the radio-frequency signal generator (2) to one of the specified nominal frequencies or to the nominal frequency if this frequency is unique.

c) Using the encoder (1), modulate the radio-frequency signal generator (2) with the reference sequence of message or selective calls to generate the standard coded test signal (SCTS) (message or selective calling) (see 2.22 and 2.23).

d) Adjust the level of the input signal to the receiver-decoder to a value 6 dB in excess of the sensitivity (SUS or MUS) (message or selective calling) determined in 4.1.

e) Increase the input-signal frequency displacement to a value which will produce a high error ratio (e.g. 50 % or greater).

f) 1) Transmit the SCTS a maximum of four times, terminating the transmission sequence, if the receiver-decoder does not recognize any of its SCTS, adjust the input signal frequency displacement according to step f)2) or f)3), whichever is appropriate.

   2) If the receiver decoder fails to recognize either the first, second, third, or fourth SCTS, decrease the input signal frequency displacement by 100 Hz, and repeat step f)1).

   3) If the receiver decoder recognizes four SCTS, record the frequency.

g) Repeat steps e) to f) for the frequency displacement on the other side of the specified nominal frequency.

4.8.5 Presentation of results for message or selective calling

a) Record the acceptable radio-frequency displacement (referred to SUS or MUS) (message or selective calling) as the smaller of the values in step f)3) of 4.8.4.

b) Record the input signal arrangement used, characteristics of the SCTS (message or selective calling) and the sensitivity (SUS or MUS) (message or selective calling).

NOTE – This method of measurement is suitable for making measurements at levels other than the 6 dB increase per step d) of 4.8.4.

Copyright International Electrotechnical Commission
Provided by IHS under license with IEC
No reproduction or networking permitted without license from IHS Not for Resale

4.8.6 Compliance test method – Acceptable radio-frequency displacement (data)

NOTE – The value of the sensitivity (MUS or SUS) (data) determined in 7.1.3 or 7.1.5 or defined in 7.2.1 is required for this measurement.

a) Connect the equipment as illustrated in figure 4 with the switches in position b, using test equipment items (1) and (2) and a comparator (see 2.7).

b) Adjust the frequency of the radio-frequency signal generator (2) to one of the specified nominal frequencies or to the nominal frequency if this frequency is unique.

c) Using the encoder (1), modulate the radio-frequency signal generator (2) with the standard train of coded test signal (data) or with the specified message or selective call to generate the standard coded test signal (data) (SCTS) (see 2.16, 2.22, 2.23 and 2.24).

d) Adjust the level of the input signal to the receiver-decoder to a value 6 dB in excess of the sensitivity (SUS or MUS) (data) determined in 4.1.

e) Adjust the input signal frequency displacement to the upper (“lower” for step h)) specified value of the acceptable radio-frequency displacement (data).

f) Transmit the standard train of SCTS for bit stream or character string (see 2.24), or 18 specified messages or selective calls.

g) If there are 25 or less errors for bit stream or character string, or three or less errors for message or selective call, record that for this displacement the receiver-decoder does comply with the upper specified acceptable radio-frequency displacement (data) specification, otherwise record that it does not comply.

h) Repeat steps e) through g) for the frequency displacement on the lower side of the specified nominal frequency.

i) If it was recorded in step g) that the receiver-decoder does comply for both frequency displacements, then record that it does comply with the acceptable radio-frequency displacement (data) specification, otherwise record that it does not comply.

j) Record the input signal arrangement used, characteristics of the SCTS (data) the sensitivity (SUS or MUS) (data) and the specified value of the acceptable radio-frequency displacement (data).

4.9 Impulsive-noise tolerance (data)

4.9.1 Definition

The ability of a receiver to prevent impulsive-noise from degrading the desired response at the output of the receiver.

It is expressed as the ratio of

a) the median level of spectrum amplitude of the impulsive-noise that causes a wanted signal, which is 3 dB in excess of the sensitivity (SUS or MUS) (data), to produce an error ratio equal to the reference error ratio (data), to

b) the wanted signal level (sensitivity (SUS) plus 3 dB) or the sensitivity (MUS) (the wanted signal level is the sensitivity (MUS) plus 3 dB).

4.9.2 Method of measurement for bit stream or character string

NOTE 1 – The value of the sensitivity (MUS or SUS) (bit stream or character string) determined in 7.1.3 or defined in 7.2.1 is required for this measurement.

NOTE 2 – For information on the characteristics and calibration of a random impulse generator, see annex G.

a) Calibrate the random impulse generator in accordance with clause G.3 of annex G and record the spectrum amplitude S in dB(μV)/MHz.

b) Connect the equipment as illustrated in figure 4, and connect the random impulse generator to the input of step attenuator (9). Increase the attenuation of attenuator (9) to a high value.

Copyright International Electrotechnical Commission
Provided by IHS under license with IEC
No reproduction or networking permitted without license from IHS Not for Resale

c) Adjust the frequency of the radio-frequency signal generator (2) to one of the specified nominal frequencies or to the nominal frequency if this frequency is unique.

d) Modulate the radio-frequency signal generator (2) with the standard coded test signal (SCTS).

e) In the absence of the impulsive noise, adjust the signal at the input of matching and combining network (4) to be 3 dB in excess of the sensitivity (SUS or MUS) (bit stream or character string) determined in 4.1, plus the loss of the matching and combining network.

f) Adjust the random impulse generator to the following settings:

- a frequency 100 kHz below the standard input frequency;
- an average pulse repetition rate of 100 impulses per second;
- a pulse duration of 0,2 μS;
- a standard deviation of amplitude of 6 dB;
- a 10 Hz cut-off frequency of the low-pass filter for random amplitude distribution;
- a minimum spectrum amplitude (the same state as step a)).

NOTE 3 – The random impulse generator settings simulate the radio-frequency noise produced by city traffic that would impinge on the antenna of a nearby mobile land station. The above settings of the random impulse generator are not applicable to other environments.

g) Adjust the step attenuator (9) to produce the sensitivity (SUS or MUS) (bit stream or character string) multiplied by the ratio of the impulse-noise tolerance (bit stream or character string) stated in the equipment specification, plus the loss of the matching and combining network (4).

h) Transmit the standard train of SCTS (see 2.24).

i) Calculate and note the error ratio.

j) 1) If the error ratio equals the reference error ratio (bit stream or character string), terminate the measurement. Record the attenuation *D* of the step attenuator (9) and proceed to step b) of 4.9.3.

2) If the error ratio is less than the reference error ratio (bit stream or character string), decrease the attenuation of the step attenuator (9) by 1 dB.

3) If the error ratio is greater than the reference error ratio (bit stream or character string) increase the attenuation of the step attenuator (9) by 1 dB.

k) Repeat steps h) to j) until two consecutive values of error ratio have been obtained which bracket the reference error ratio (bit stream or character string). Record the attenuation U in decibels of the step attenuator that corresponds to the error ratio which is just greater than the reference error ratio (bit stream or character string).

NOTE – The above procedure does not use the random impulse generator internal attenuator which would need to be set to the minimum constant value. If the attenuation variable range of the attenuator (9) is not sufficient, the internal attenuator may be used, in addition, and the attenuation value change could be added to or subtracted from the attenuation value of the attenuator (9).

4.9.3 Presentation of results for bit stream or character string

a) Calculate the attenuation level *D* as follows:

$$D = U - 0{,}5 \quad \text{(dB)}$$

where:

U is the attenuation recorded in step k) of 4.9.2.

b) Calculate the impulsive-noise tolerance, *I*, either as:

$$I = S - D - R \quad \text{(for tolerance MUS)} \quad \text{(dB(μV)/MHz), or}$$

$$I = S - D - R - 3 \quad \text{(for tolerance SUS)} \quad \text{(dB(μV)/MHz)}$$

Copyright International Electrotechnical Commission
Provided by IHS under license with IEC
No reproduction or networking permitted without license from IHS Not for Resale

where

S is the spectrum amplitude recorded in step a) of 4.9.2;

D is the attenuation value calculated in step a) or the value recorded in step j) of 4.9.2;

R is the sensitivity (SUS or MUS) (bit stream or character string) in dB(μV) plus the loss of the matching and combining network (4).

c) Record the impulsive-noise tolerance (referred to SUS or MUS) (bit stream or character string), the standard input frequency, the sensitivity (SUS or MUS) (bit stream or character string) and the settings of the random impulse generator.

4.9.4 Method of measurement for message or selective calling

NOTE 1 – The value of the sensitivity (MUS or SUS) (message or selective calling) determined in 7.1.5 or defined in 7.2.1 is required for this measurement.

NOTE 2 – For information on the characteristics and calibration of a random impulse generator, see annex G.

a) Calibrate the random impulse generator in accordance with clause G.3 of annex G and record the spectrum amplitude *S* in dB(μV)/MHz.

b) Connect the equipment as illustrated in figure 4, and connect the random impulse generator to the input of step attenuator (9). Increase the attenuation of attenuator (9) to a high value.

c) Adjust the frequency of the radio-frequency signal generator (2) to one of the specified nominal frequencies or to the nominal frequency if this frequency is unique.

d) Modulate the radio-frequency signal generator (2) with the standard coded test signal (SCTS).

e) In the absence of the impulsive noise, adjust the signal at the input of matching and combining network (4) to be 3 dB in excess of the sensitivity (SUS or MUS) (message or selective calling) determined in 4.1 plus the loss of the matching and combining network.

f) Adjust the random impulse generator to the following settings:

- a frequency 100 kHz below the standard input frequency;
- an average pulse repetition rate of 100 impulses per second;
- a pulse duration of 0,2 μS;
- a standard deviation of amplitude of 6 dB;
- a 10 Hz cut-off frequency of the low-pass filter for random amplitude distribution;
- a minimum attenuation (the same state as step a)).

NOTE 3 – The random impulse generator settings simulate the radio-frequency noise produced by city traffic that would impinge on the antenna of a nearby mobile land station. The above settings of the random impulse generator are not applicable to other environments.

g) Decrease the step attenuator (9) to a value which will produce a high error ratio (e.g. 50 % or greater).

h) 1) Transmit the SCTS a maximum of three times, terminating the transmission sequence. Adjust the step attenuator (9) according to step h)2) or h)3), whichever is appropriate.

2) If the receiver-decoder fails to recognize either the first, second or third SCTS, increase the attenuation of (9) by 2 dB and repeat step h)1).

3) If the receiver-decoder recognizes the three SCTS, record the attenuation value in decibels, decrease the attenuation of (9) by 1 dB, record the new attenuation value in decibels, and proceed to step i)1).

i) 1) Transmit the SCTS a maximum of three times, terminating the transmission sequence. Adjust the step attenuator (9) according to step i)2) or i)3), whichever is appropriate.

2) If the receiver-decoder fails to recognize either the first, second or third SCTS, increase the attenuation of (9) by 1 dB, record the new attenuation value in decibels, and repeat step i)1). See step j).

3) If the receiver-decoder recognizes the three SCTS, reduce the attenuation of (9) by 1 dB, record the new attenuation value in decibels, and repeat step i)1). See step j).

--`,,`,,`-`-`,,`,,`,`,,`---

Copyright International Electrotechnical Commission
Provided by IHS under license with IEC
No reproduction or networking permitted without license from IHS Not for Resale

j) Continue steps i)1), i)2), and i)3) until attenuator values have been recorded 20 times.

NOTE 4 – A careful study of the example in figure E.10 of annex E, is recommended to avoid the possibility of misunderstanding steps h) and i).

NOTE 5 – The above procedure does not use the random impulse generator internal attenuator which would need to be set to the minimum constant value. If the attenuation variable range of the attenuator (9) is not sufficient, the internal attenuator may be used, in addition, and the attenuation value change could be added to the attenuation value of the attenuator (9).

4.9.5 Presentation of results for message or selective calling

a) Calculate *D*, the average of the attenuation values recorded in steps h)3), i)2) and i)3) of 4.9.4.

b) Calculate the impulsive-noise tolerance, *I*, either as:

$$I = S - D - R \quad \text{(for tolerance MUS) (dB(μV)/MHz), or}$$

$$I = S - D - R - 3 \quad \text{(for tolerance SUS)} \quad \text{(dB(μV)/MHz)}$$

where:

S is the spectrum amplitude recorded in step a) of 4.9.4;

D is the attenuation value calculated in step a) or the value recorded in step j) of 4.9.4;

R is the sensitivity (SUS or MUS) (bit stream or character string) in dB(μV) plus the loss of the matching and combining network (4).

c) Record the impulsive-noise tolerance (referred to SUS or MUS) (message or selective calling), the standard input frequency, the sensitivity (SUS or MUS) (message or selective calling) and the settings of the random impulse generator.

4.9.6 Compliance test method – Impulsive-noise tolerance (data)

NOTE 1 – The value of the sensitivity (MUS or SUS) (data) determined in 7.1.3 or 7.1.5 or defined in 7.2.1 is required for this measurement.

a) Calibrate the random impulse generator in accordance with clause G.3 of annex G and record the spectrum amplitude *S* in dB(μV)/MHz.

b) Connect the equipment as illustrated in figure 4, and connect the random impulse generator to the input of step attenuator (9). Increase the attenuation of attenuator (9) to a high value.

c) Adjust the frequency of the radio-frequency signal generator (2) to one of the specified nominal frequencies or to the nominal frequency if this frequency is unique.

d) Modulate the radio-frequency signal generator (2) with the standard train of standard coded test signal (SCTS) (data) or with the specified message or selective call to generate the standard coded test signal (SCTS) (data) (see 2.16, 2.22, 2.23 and 2.24).

e) In the absence of the impulsive noise, adjust the signal at the input of the matching and combining network (4) to be 3 dB in excess of the sensitivity (SUS or MUS) (data) determined in 4.2, plus the loss of the matching and combining network (4).

f) Adjust the random impulse generator to the following settings:

– a frequency 100 kHz below the standard input frequency;

– an average pulse repetition rate of 100 impulses per second;

– a pulse duration of 0,2 μS;

– a standard deviation of amplitude of 6 dB;

– a 10 Hz cut-off frequency of the low-pass filter for random amplitude distribution;

– a minimum attenuation (the same state as step a)).

NOTE 2 – The random impulse generator settings simulate the radio-frequency noise produced by city traffic that would impinge on the antenna of a nearby mobile land station. The above settings of the random impulse generator are not applicable to other environments.

Copyright International Electrotechnical Commission
Provided by IHS under license with IEC
No reproduction or networking permitted without license from IHS Not for Resale

g) Adjust the step attenuator (9) to obtain a signal level at the input of the matching and combining network (4) which equals the sensitivity (SUS) plus 3 dB or the sensitivity (MUS) (data) determined in 4.1, increased by the specified value of the impulsive-noise tolerance (data), plus the loss of the matching and combining network (4).

h) Transmit the standard train of SCTS for bit stream or character string (see 2.24), or 33 specified messages or selective calls.

i) If there are 25 or less errors for bit stream or character string, or six or less errors for message or selective call, record that the receiver-decoder does comply with the impulsive-noise tolerance (data) specification, otherwise record that it does not comply.

j) Record the input signal arrangement used, characteristics of the SCTS (data), sensitivity (SUS or MUS) (data) and specified impulsive-noise tolerance (data).

5 Measurements of receiver-decoder radio-frequency parameters (selective calling only)

5.1 Protection from radio-frequency intermodulation false operation (selective calling)

5.1.1 Definition

The ability of the receiver-decoder to prevent two unwanted signals (one of which is modulated by the SCTS) having a specific frequency relationship to the wanted signal frequency, from causing unwanted responses at the output of the receiver-decoder due to intermodulation (see annex D).

It is the ratio, expressed in decibels, of

a) the level of the modulated unwanted signal that produces the standard calling probability, to

b) MUS or SUS.

NOTE – This method of measurement provides the two-signal intermodulation characteristic. For specific modulation processes, the modulating signal may have to be inverted.

5.1.2 Method of measurement

NOTE 1 – The value of the sensitivity (MUS or SUS) (message or selective calling) determined in 7.1.5 or defined in 7.2.1 required for this measurement.

a) Connect the equipment as illustrated in figure 4, with the switches in position a.

b) Choose a pair of frequencies f_n and f_r that may produce an intermodulation response (see annex D). Record these frequencies.

c) Adjust the modulated radio-frequency signal generator (6) to frequency f_r, modulated with the SCTS and adjust the signal level to a high value, for example 80 dB(μV). Record this level.

d) Apply the unwanted unmodulated input signal of frequency f_n from the output of the radio-frequency signal generator (8) to the combining network (7) at the same level as in step c).

e) Increase the step attenuator (9) to a value which will produce a high error ratio (e.g. 50 % or greater).

f) Transmit the SCTS repeatedly and adjust the step attenuator (9) according to the following rules:

g) 1) Transmit the SCTS a maximum of three times, terminating the transmission sequence, if the receiver-decoder fails to recognize the signal any one of those times. Adjust the step attenuator (9), according to step g)2) or g)3), whichever is appropriate.

2) If the receiver-decoder fails to recognize either the first, second, or third SCTS, decrease the attenuation of (9) by 2 dB, and repeat step g)1).

3) If the receiver-decoder recognizes the three SCTSs, record the attenuation value in decibels, increase the attenuation of (9) by 1 dB, record the new attenuation value in decibels, and proceed to step h)1).

Copyright International Electrotechnical Commission
Provided by IHS under license with IEC
No reproduction or networking permitted without license from IHS Not for Resale

h) 1) Transmit the SCTS a maximum of three times, terminating the transmission sequence, if the receiver-decoder fails to recognize the signal any one of those times. Adjust the step attenuator (9), according to step h)2) or h)3), whichever is appropriate.

2) If the receiver-decoder fails to recognize either the first, second, or third SCTS, decrease the attenuation of (9) by 1 dB, record the new attenuation value in decibels, and repeat step h)1). See step i).

3) If the receiver-decoder recognizes the three SCTS, increase the attenuation of (9) by 1 dB, record the new attenuation value in decibels, repeat step h)1). See step i).

i) Continue steps h)1), h)2) and h)3) until attenuator values have been recorded 20 times.

NOTE – A careful study of the example in figure E.10, of annex E is recommended to avoid the possibility of misunderstanding steps g) and h).

j) Steps b) to i) may be repeated for other unwanted signal frequencies.

5.1.3 Presentation of results

a) Calculate the average of the attenuation values recorded in steps g) and h) of 5.1.2.

b) The protection from radio-frequency intermodulation false operation (selective calling) in decibels is:

$$A - B - C - D - E$$

where

A is the output level of the radio-frequency signal generator (6) (the output of the radio-frequency signal generator (8) is set at the same level) recorded in step c) of 5.1.2 in dB(μV);

B is the loss of the combining network (7) in decibels;

C is the loss of the combining network (4) in decibels;

D is the average of the attenuation values calculated in step a) of this subclause, in decibels;

E is the sensitivity (MUS or SUS) (message or selective calling) in dB(μV) determined in 7.1.5 or defined in 7.2.1.

c) Record in a table the values of the departure from the standard input-signal frequency of the unwanted signals and the protection from radio-frequency intermodulation false operation (selective calling) in step b).

d) Record the sensitivity (MUS or SUS) (message or selective calling) in dB(μV) and the standard input-signal frequency.

5.2 False responses due to noise (selective calling)

Receiver noise can cause the decoder to produce false calling responses in the absence of selective calling signals.

5.2.1 Definition

The mean time between false calling responses (*M*) is defined as the average time between consecutive false calling responses.

For the purpose of this measurement, this time is estimated by observing the time required to produce eight false calling responses and dividing it by eight.

5.2.2 Method of measurement

NOTE 1 – Five per cent of the measurements will require more than 13 times the mean time (*M*) of the equipment (see annex E). If the required measurement time is too long to be practical, this measurement should not be specified.

--`,,`,,`-`-`,,`,,`,`,,`---
Copyright International Electrotechnical Commission
Provided by IHS under license with IEC
No reproduction or networking permitted without license from IHS Not for Resale

NOTE 2 – This test is applicable only to receivers in which the squelch can be disabled, thus allowing receiver noise to reach the decoder.

a) Terminate the input terminals of the receiver as specified by the manufacturer and, with no input signal applied to the receiver, deactivate the receiver squelch.

b) Adjust receiver gain and volume control, if fitted for normal decoder operation, in accordance with the manufacturer's instructions.

c) Monitor the operation of the decoder until eight false operations have occurred. Record the total time interval (*H*) in hours.

5.2.3 Presentation of results

Calculate *M*, using:

$$M = \frac{H}{8} \text{ (hours)}$$

5.2.4 Compliance test method

This test is applicable only to receivers in which the squelch can be disabled, thus allowing receiver noise to reach the decoder.

a) For receiver-decoders with antenna terminals, terminate the input terminals of the receiver as specified by the manufacturer. Receiver-decoders with an integral antenna should be shielded. With no input signal applied to the receiver-decoder, deactivate the receiver squelch.

b) Adjust the receiver gain and volume control, if fitted for normal decoder operation in accordance with the manufacturer's instructions.

c) Test the receiver-decoder for a maximum period of 8,67 times *M*. Note the number of false calling responses *F* in the elapsed time *T*.

M is the specified mean time between consecutive false calling responses

T is in the same units as *M*

F is the number of false calling responses

Record that the receiver-decoder does comply with the false responses due to noise (selective calling) specification if:

1) at the end of the test period, *F* is 8 or less,

or

2) at any time during the test period, *T* is greater than *F* + 3. The test is then terminated.

Record that the receiver-decoder does not comply with the false responses due to noise (selective calling) specification if:

1) at any time during the test period, *F* is greater than 8. The test is then terminated,

or

2) at any time during the test period, *F* is greater than *T* + 3. The test is then terminated.

Example:

An equipment with *M* = 1,6 h will comply with the specification if 8 or less false calling responses are detected in 13,87 h (8,67 × 1,6 h) or if only two false calling responses have been detected after 8 h (5 × 1,6 h).

Copyright International Electrotechnical Commission
Provided by IHS under license with IEC
No reproduction or networking permitted without license from IHS Not for Resale

5.3 Signalling attack time (selective calling)

5.3.1 Definition

The elapsed time from the instant when the radio-frequency input-signal modulated by the standard coded test signal is applied at the receiver until the receiver-decoder successfully responds. If the response is an audio output, then the signalling attack time (selective calling) is measured when the audio output reaches 50 % of the steady-state value.

5.3.2 Method of measurement

a) Connect the equipment as illustrated in figure 7.

b) Modulate the radio-frequency signal generator (5) with the SCTS.

c) Adjust the radio-frequency signal generator (5) to the standard input-signal frequency and to produce a level 30 dB above reference sensitivity (selective calling) at the receiver input terminals.

d) Display the encoder voltage on one trace of a double-beam oscilloscope and display the decoder alarm indicating signals on the other beam.

e) Measure the time interval from the instant when the coded signal voltage applied to the radio-frequency signal generator exceeds 50 % of its maximum level until the alarm circuit output has reached 50 % of its maximum amplitude.

NOTE – If the receiver has no alarm device, the activation of the squelch circuit shall be used as an indication of response.

5.4 Recovery time (selective calling)

5.4.1 Definition

The minimum time interval that is needed between two successive encoded calling sequences to ensure that the decoder will respond correctly to the second sequence.

This characteristic can be observed only when the decoder automatically resets.

5.4.2 Method of measurement

a) Connect the equipment specified by the manufacturer as illustrated in figure 7.

b) Modulate the radio-frequency signal generator (5) with the SCTS.

c) Adjust the radio-frequency signal generator (5) to the standard input-signal frequency and to produce a level 30 dB above reference sensitivity (selective calling).

d) Arrange for the interval between two successive SCTSs to be variable from zero to at least twice the recovery time stated by the manufacturer.

e) With the time interval set for zero, transmit the two SCTSs repeatedly and observe whether the second SCTS is successfully decoded. After each transmission series, adjust the interval according to the following rules:

   – if the receiver-decoder fails to decode the signal, increase the interval by 20 % of the value of the recovery time stated by the manufacturer;

   – if the receiver-decoder successfully decodes the signal, do not change the interval until there have been four consecutive successes. Then record this value of the interval. This is the recovery time (selective calling).

Copyright International Electrotechnical Commission
Provided by IHS under license with IEC
No reproduction or networking permitted without license from IHS Not for Resale

5.5 Required protection time (selective calling)

5.5.1 Definition

The maximum time during which a partially operated decoder requires protection from other coded signals containing the complementary part of the necessary code (see figure 8).

5.5.2 Method of measurement

a) Connect the equipment as illustrated in figure 4.

b) The encoder used to make the measurement shall incorporate a means to vary the time interval between transmission of the two parts of the SCTS.

c) Adjust the radio-frequency signal generator (2) to the standard input-signal frequency and to produce a level 30 dB above reference sensitivity (selective calling) at the receiver input terminals.

d) Arrange the encoder to initially send the first part of an SCTS and, after an interval, adjustable up to recovery time, send the remaining part of the SCTS.

e) Increase the interval to a value which will produce a low calling probability (e.g. less than 10 %).

f) Transmit the SCTS repeatedly and observe whether the signal is successfully decoded.

   After each transmission, adjust the interval according to the following rules:

   – if the receiver-decoder (10) fails to decode the signal, decrease the interval by 20 % of the value of protection time stated by the manufacturer;

   – if the receiver-decoder (10) successfully decodes the signal, do not change the interval until there have been four consecutive successes. Record this value of time interval. This is the protection time (selective calling).

NOTE – In individual-tone sequential systems having more than two tones, it may be necessary to repeat this measurement with the time interval in different positions of the SCTS.

5.6 Signal-to-residual output-power ratio (selective calling)

This characteristic is only applicable to receivers and decoders employing continuous individual-tone selective calling signalling and having accessible audio-terminals.

5.6.1 Definition

The ratio, expressed in decibels, of

a) the receiver output power when a signal modulated with 1 000 Hz plus the continuous selective calling tone is applied to its input, to

b) the receiver output power when a signal modulated only by the continuous selective calling tone is applied to its input.

5.6.2 Method of measurement

a) Connect the equipment as illustrated in figure 9.

b) Connect the audio-frequency test load and an audio-frequency voltmeter to the output of the receiver.

c) Apply a standard input signal modulated with 1 000 Hz and the continuous selective calling tone at a level 30 dB above the level which produces 12 dB SINAD to the input of the receiver.

   The composite modulation should be adjusted in accordance with the manufacturer's instructions.

Copyright International Electrotechnical Commission
Provided by IHS under license with IEC
No reproduction or networking permitted without license from IHS Not for Resale

d) Adjust the receiver volume control to produce the reference output power at the test load.

e) Remove the standard 1 kHz modulation but not the continuous individual-tone modulation and record the reduction, in decibels, of the power dissipated in the audio-frequency load.

6 Measurements of receiver-decoder conducted and radiated spurious components

6.1 Conducted spurious components (data and selective calling)

6.1.1 Definition

Conducted spurious components are radio-frequency components that are usually characterized by having a dominant component at a discrete frequency or in a narrow band of frequencies. They may be present at the antenna or a.c. power terminals of the receiver.

6.1.2 Method of measurement of antenna terminal conducted spurious components

a) Connect the equipment as shown in figure 10.

b) With the receiver operating, adjust the frequency of the selective measuring device (4) over the specified range of measurements to search for the spurious components.

c) Record the frequency and level of each spurious component found.

NOTE 1 – For the purpose of this measurement, the impedance of the test load (3) including the effect of the selective measuring device (4) should be equal to the source impedance required by the artificial antenna (or the receiver).

NOTE 2 – Measurement precautions: precautions should be taken to prevent interfering voltages from entering the measuring equipment, either by radiation or through the mains supply leads.

NOTE 3 – This test method is limited to the case of metre and decimetre wavelengths, since the voltage measured across a test load connected to the antenna terminals is not representative of the interference in the case of hectometre waves. In the case of a ship, the result obtained, when the installation is built, depends to a considerable extent on the position of the antenna with respect to the superstructure.

6.1.3 Presentation of results

The levels recorded in step c) of 6.1.2 expressed as a voltage or as a power, are the antenna terminal conducted spurious components. Record their frequency and the impedance of the test load. Record the component values of the artificial antenna and of the test load. Also record the characteristic impedance and the length of the cable between the receiver and the length of the cable between the receiver and the artificial antenna.

6.1.4 Method measurement of a.c. power terminal conducted spurious components (for frequencies below 30 MHz)

a) The asymmetrical components are measured using the arrangement shown in figure 10 but with switch (6) in position B.

NOTE – An example of a mains power line impedance stabilization (isolation) network, also known as an artificial mains network, is given in annex H.

b) With the receiver operating, adjust the frequency of the selective measuring device (4) over the specified range of measurements to search for the spurious components.

c) Record the frequency and level of each spurious component found, along with the attenuation due to the mains power line stabilization (isolation) network.

6.1.5 Presentation of results

The levels recorded in step c) of 6.1.4 corrected for the loss of the mains power line impedance stabilization (isolation) network, and expressed as a voltage or as a power, are the a.c. power terminal conducted spurious components.

Copyright International Electrotechnical Commission
Provided by IHS under license with IEC
No reproduction or networking permitted without license from IHS Not for Resale

6.1.6 Method of measurement at the a.c. power terminal (for frequencies up to 1 000 MHz)

No requirement at this time.

6.2 Radiated spurious components (data)

The radiated spurious components are any radiation originating from within a receiver.

The radiated spurious components of a receiver may contain:

– average radiated spurious components;
– maximum effective radiated spurious components;
– RFM (random field measurement) radiated spurious components;
– RFCD radiated spurious components.

The method of measurement for each of the above follows the same procedure as for the radiated radio-frequency power of transmitters described in 12.1.2 to 12.1.5 respectively replacing the words transmitter with receiver and radiated power with radiated spurious components.

Attention is drawn to the difference between the radiated spurious components and the radiated radio-frequency power of transmitters when carrying out the above measurement procedures.

a) The power levels of the radiated spurious components of receivers are far below the radiated radio-frequency power of transmitters and these test sites or RFCD which have a higher coupling loss may not be able to measure low-level ones. A lower coupling loss test site, RFCD or measurement conditions should be chosen.
b) If the receiver has an antenna terminal, it shall be terminated in a test load having an impedance equal to the nominal radio-frequency input impedance.
c) The transmitting frequency or frequencies are known. However, frequencies of the radiated spurious components may not be known and searching and identifying them may be necessary. If necessary, closely couple a selective measuring device to the receiver under test.
d) The polarization of the radiated spurious components may not be the same as the antenna polarization. Confirmation of the radiation polarization may be necessary when measuring antenna polarization change.

7 Measurements of encoder-transmitters radio-frequency parameters

7.1 Frequency error (data)

7.1.1 Definition

a) The frequency error is the difference between the carrier frequency and the nominal frequency related for the test.
b) If a carrier frequency cannot be identified, a characteristic frequency having a specified and fixed position with respect to the carrier shall be used instead of the carrier frequency.
c) If a characteristic frequency cannot be identified, it is still possible to replace the carrier frequency by an average frequency (see 2.1).
d) If the average frequency is not appropriate because of the asymmetry of the spectrum, the average frequency shall be replaced by the centre of the occupied band by an emission.

The frequency error is expressed in parts per 10^6 or in hertz.

--`,,`,,`-`-`,,`,,`,`,,`---
Copyright International Electrotechnical Commission
Provided by IHS under license with IEC
No reproduction or networking permitted without license from IHS Not for Resale

7.1.2 Method of measurement – Type 1: continuous emission, capable of unmodulated carrier transmission

This method uses a frequency counter.

a) Connect the equipment as illustrated in figure 11.

b) Operate the transmitter to emit an unmodulated carrier.

c) Record the measured frequency as the frequency of the transmitter.

7.1.3 Method of measurement – Type 2: continuous emission, allowed state

This method uses a frequency counter.

a) Connect the equipment as illustrated in figure 11.

b) Operate the transmitter to emit a signal that is constant at one of the allowed states.

c) Record the measured frequency as the characteristic frequency (data) of the transmitter.

d) Using the relationship of the frequency of the allowed state to the carrier frequency, calculate the frequency of the transmitter.

7.1.4 Method of measurement – Type 3a: continuous emission, modulated carrier, random data (symmetrical spectrum)

This method uses an averaging frequency counter.

a) Connect the equipment as illustrated in figure 11.

b) Operate the transmitter to emit a carrier continuously modulated with a standard baseband test signal.

c) Measure the number of positive-going (or the number of negative-going) zero crossings of the modulation signal, divided by the duration of the measurement. The duration of the measurement shall be longer than 10 s to provide a repeatable measurement of the average frequency.

d) Record the measured average frequency as the frequency of the transmitter.

7.1.5 Method of measurement – Type 3b: continuous emission, modulated carrier, non-random data (asymmetrical spectrum)

This method uses a digital storage spectrum analyser to measure the centre frequency of the frequency band occupied by an emission.

a) Connect the equipment as illustrated in figure 11. The spectrum analyser (6) is a digital storage type and is characterized in annex B, clause B.4.

b) Operate the transmitter to emit a carrier continuously modulated with a standard baseband test signal.

c) Adjust:

- the centre frequency of the spectrum analyser and the total swept bandwidth (B) to its minimum value which will display all spectral components that are greater than –40 dB relative to the maximum spectral component;
- the resolution and video filter bandwidth (R) to the lowest possible setting but not less than the total swept bandwidth divided by 200, nor greater than the total swept bandwidth divided by 40;
- the sweep time to greater than $3B/R^2$;
- record the values of B and R.

Copyright International Electrotechnical Commission
Provided by IHS under license with IEC
No reproduction or networking permitted without license from IHS Not for Resale

d) Measure and record the power spectrum *p(i)* of *N* samples (where *N* is approximately 1 000) uniformly distributed throughout the total swept bandwidth (B). Calculate and record the total power P_S from

$$P_S = \sum_{i=1}^{N} 10^{P(i)/10}$$

e) Identify and record the frequency F_L of the sample $i = L$ that satisfies the inequalities

$$\sum_{i=1}^{L} 10^{P(i)/10} \leq 0{,}005\ P_S \leq \sum_{i=1}^{L+1} 10^{P(i)/10}$$

f) Identify and record the frequency F_U of the sample $i = U$ that satisfies the inequalities

$$\sum_{i=1}^{U} 10^{P(i)/10} \leq 0{,}995\ P_S \leq \sum_{i=1}^{U+1} 10^{P(i)/10}$$

g) Calculate and record the centre frequency F_C of the frequency band occupied by the emission from

$$F_C = \frac{(F_L + F_U)}{2}$$

NOTE – This method of measurement should not be used if a characteristic frequency (see 7.1.1 b)) of the emission can be identified or an average frequency can be measured that conforms to the definition in 2.1.

7.1.6 Method of measurement – Type 4a: short emission, modulated carrier, random data (symmetrical spectrum)

This method uses a frequency counter (see 3.3.12.3).

a) Connect the equipment as illustrated in figure 11.

b) Operate the transmitter to emit a carrier in short burst periodically and modulated with a standard baseband test signal (bit stream).

c) To provide a repeatable measurement for the frequency, measure the frequency for longer than the time determined in the following relationship:

$$\text{measuring time} \geq \frac{T_P}{(R_F \times GW)^2} \quad \text{(s)}$$

where

T_p is the pulse period in seconds (s);

R_F is the frequency resolution in hertz (Hz);

GW is the gate width of the counter ≤ pulse duration in seconds (s).

d) Record the measured average frequency as the frequency of the transmitter.

7.1.7 Method of measurement – Type 4b: short emission, modulated carrier, non-random data (asymmetrical spectrum)

This method uses a digital storage spectrum analyser to measure the centre frequency of the frequency band occupied by an emission.

a) Connect the equipment as illustrated in figure 11. The spectrum analyser (6) is a digital storage type and is characterized in annex B, clause B.4.

Copyright International Electrotechnical Commission
Provided by IHS under license with IEC
No reproduction or networking permitted without license from IHS Not for Resale

b) Operate the transmitter to emit a carrier in short burst periodically and modulated with a standard baseband test signal.

c) Adjust

– the centre frequency of the spectrum analyser and the total swept bandwidth (B) to its minimum value which will display all spectral components that are greater than –40 dB relative to the maximum spectral component;

– the resolution and video filter bandwidth (R) to the lowest possible setting but not less than the total swept bandwidth divided by 200, nor greater than the total swept bandwidth divided by 40;

– the sweep time (T_S) such that

$$T_S > T_P \times N \quad \text{(s)}$$

where

T_p is the burst pulse period in seconds (s);

N is the number of total samples.

NOTE – Each sample point meets at least one burst emission.

– display the mode control to MAX HOLD mode;

– record the values of B and R.

d) Measure and record the power spectrum $P(i)$ of N samples (where N is approximately 1 000) uniformly distributed throughout the total swept bandwidth, B. Calculate and record the total power P_S from

$$P_S = \sum_{i=1}^{N} 10^{P(i)/10}$$

e) Identify and record the frequency F_L of the sample $i = L$ that satisfies the inequalities

$$\sum_{i=1}^{L} 10^{P(i)/10} \leq 0{,}005\ P_S \leq \sum_{i=1}^{L+1} 10^{P(i)/10}$$

f) Identify and record the frequency F_U of the sample $i = U$ that satisfies the inequalities

$$\sum_{i=1}^{U} 10^{P(i)/10} \leq 0{,}995\ P_S \leq \sum_{i=1}^{U+1} 10^{P(i)/10}$$

g) Calculate and record the centre frequency F_C of the frequency band occupied by the emission from

$$F_C = \frac{(F_L + F_U)}{2}$$

NOTE – This method of measurement should not be used if a characteristic frequency (see 7.1.1 b)) of the emission can be identified, or an average frequency can be measured, that conforms to the definition in 2.1.

7.1.8 Presentation of results

Calculate the frequency error (data) as the difference between the frequency of the transmitter as measured in 7.1.2 step c), 7.1.3 step d), 7.1.4 step d), 7.1.5 step g), 7.1.6 step d) and 7.1.7 step g) (as appropriate) and the nominal frequency for the test.

--`,,`,,`-`-`,,`,,`,`,,`---
Copyright International Electrotechnical Commission
Provided by IHS under license with IEC
No reproduction or networking permitted without license from IHS Not for Resale

7.2 Average radio-frequency output power (data)

7.2.1 Definition

The average radio-frequency power supplied to a transmission line

a) measured as a continuous power when the data modulation is continuous, or

b) measured during the time of the data modulation.

7.2.2 Method of measurement – Types 1, 2 and 3: continuous emission

This method applies for frequency or phase modulation.

a) Connect the equipment as illustrated in figure 11.

b) Apply the maximum number of input signals (see 1.3.1) at the levels required by the equipment specification.

c) Operate the transmitter and note the power measured as the average radio-frequency power output (data) in watts. Note the transmitter frequency.

d) If required, repeat steps b) and c) for other channels for which the transmitter is equipped to operate.

7.2.3 Method of measurement – Type 4: short emission, modulated carrier

This method uses a waveform recorder.

a) Connect the equipment as illustrated in figure 11.

b) Apply the maximum number of input signals (see 1.3.1) at the levels required by the equipment specification.

c) Adjust the gating delay and gating circuits of the waveform recorder (see 3.3.14) to open for the duration of the shortest data signal.

d) Operate the transmitter and the data signals and record the sample voltage (V_i). Sample frequency should be greater than two times the symbol rate.

e) Calculate the average radio-frequency power output P_{avg} using the following relationship:

$$P_{avg} = \frac{\sum^{N} (k \times V_i)^2}{R_L \times N} \quad \text{(w)}$$

where

k is a calibration constant determined by applying a known radio-frequency voltage to the waveform recorder;

V_i is the sample voltage;

N is the number of samples;

R_L is the test load resistance.

Note the calculated P_{avg}.

f) If required, repeat steps b) through e) for each channel for which the transmitter is equipped to operate.

7.2.4 Method of measurement – Type 4: short emission, modulated carrier

This method uses a power meter.

a) Connect the equipment as illustrated in figure 11.

--`,,`,,`-`-`,,`,,`,`,,`---

Copyright International Electrotechnical Commission
Provided by IHS under license with IEC
No reproduction or networking permitted without license from IHS Not for Resale

b) Apply the maximum number of input signals (see 1.3.1) at the level required by the equipment specification.

c) Operate the transmitter and note the power measured as P_{mean}.

d) Calculate the average radio-frequency power output (data) during the short emission using the following relationship:

$$P_{avg} = P_{mean} \times \frac{1}{\text{duty ratio}} \quad \text{(w)}$$

where the duty ratio is the ratio of the pulse duration of short emission to the duration of pulse repetition period.

Note the calculated P_{avg}.

e) If required, repeat steps b) through d) for other channels for which the transmitter is equipped to operate.

7.2.5 Presentation of results

a) Record the average power as noted in 7.2.2 step c), 7.2.3 step e) or 7.2.4 step d).

b) Record the transmitter frequency and the data signal parameters.

7.3 Spurious narrow bandwidth radio-frequency emission power (data)

7.3.1 Definition

Harmonic and non-harmonic emissions and parasitic emissions that are usually characterized by a signal having a dominant emission at a discrete frequency or in a narrow band of frequencies.

Emissions in the immediate vicinity of the necessary band, which are the result of the modulation process for the transmission of information, are excluded.

7.3.2 Method of measurement – Types 1, 2 and 3: continuous emission

NOTE 1 – Knowledge of the average radio-frequency output power measured in 7.2.2 is required for this measurement.

a) Connect the equipment as illustrated in figure 11.

b) Apply to the transmitter the maximum number of input signals, at the levels required by the specified system.

c) Operate the transmitter.

d) Adjust the spectrum analyser as follows:

– set the resolution bandwidth to the smallest available bandwidth wider than the transmitter necessary bandwidth designated in the equipment specification. Record this as R;

When measuring harmonics, the resolution bandwidth shall be set to at least $N \times R$ where N is the order of the observed harmonics (e.g. 2, 3, 4,...).

NOTE 2 – At higher order harmonics, the selected resolution bandwidth may result in an insufficient measurement dynamic range. A filter can be used to reduce the carrier level presented to the analyser while passing the harmonics. The analyser sensitivity can then be increased to observe the harmonics above the noise floor without overloading the analyser. The reference level is still relative to the previous unattenuated carrier level.

– set total swept bandwidth to the frequency band to be measured and record this as B;

– set the sweep time to greater than $3B/R^2$;

– set the coupler attenuation to a value which is compatible with the input characteristics of the spectrum analyser.

--`,,`,,`-`-`,,`,,`,`,,`---

Copyright International Electrotechnical Commission
Provided by IHS under license with IEC
No reproduction or networking permitted without license from IHS Not for Resale

e) Note the amplitude of the modulated carrier in decibels as $dB_{(carrier)}$.

f) Search for spurious emissions. Note the frequency and the amplitude, in decibels, as $dB_{(spur)}$, of the largest spurious emission.

NOTE 3 – If different limit values are specified for different frequency bands, care must be taken to identify and note the largest spurious emission for each frequency band.

g) If required, repeat steps b) through f) for each channel where measurements are required.

7.3.3 Presentation of results

a) Calculate the average power of the spurious emission (data) as follows:

$$P_{spurious} = P_{avg} \times 10^{[dB_{(spur)} - dB_{(carrier)}]/10} \quad (w)$$

where P_{avg} is the average radio-frequency power output measured in 7.2.2.

b) Record the transmitter frequency, the frequency of the largest spurious component, the average radio-frequency power output (data) and the average power of the spurious emission (data).

c) If required, repeat steps a) and b) for each channel measured in 7.3.2.

7.3.4 Method of measurement – Type 4: short emission, modulated carrier

This method uses a digital storage spectrum analyser to measure the spurious narrow bandwidth average radio-frequency power of short emission.

NOTE 1 – Knowledge of the average radio-frequency power output P_{avg} measured in 7.2.3 step e) is required for this measurement.

a) Connect the equipment as illustrated in figure 12.

b) Apply to the transmitter the maximum number of input signals, at the levels required by the specified system.

c) Adjust the gating delay and gating circuits to open for the duration of the shortest data signal.

d) Operate the transmitter.

e) Adjust the spectrum analyser to display the spectrum of the transmitter output. Care should be taken to observe the transmitter output during the time that the shortest data signal is being transmitted.

f) Set the resolution bandwidth of the spectrum analyser to the smallest available bandwidth wider than the bandwidth required to observe the transmitter output, and record this resolution bandwidth as *R*.

NOTE 2 – The resolution bandwidth generally becomes the bandwidth immediately above the necessary bandwidth for the transmitter. Sometimes wider bandwidths may be required because of short transmitter transient time.

g) Adjust the spectrum analyser so that the transmitter output is centered on the display. Set the sweep rate of the spectrum analyser to zero and take the samples. Record the attenuator setting of the spectrum analyser as *A(T)* in decibels.

h) Adjust the spectrum analyser as follows:

– set the total swept bandwidth to the frequency band to be measured and record this as B.

– set the sweep time to greater than $3B/R^2$.

i) Search for spurious emissions. Note the frequency and the amplitude of the largest spurious emission. Care should be taken to observe the spurious emission during the time that the shortest data signal is be transmitted.

NOTE 3 – If different limit values are specified for different frequency bands, care must be taken to identify and note the largest spurious emission for each frequency band.

j) Adjust the spectrum analyser so the transmitter spurious emission is centered on the display. Set the sweep rate of the spectrum analyser to zero and take the samples. Record the attenuator setting of the spectrum analyser as *A(S)* in decibels.

Copyright International Electrotechnical Commission
Provided by IHS under license with IEC
No reproduction or networking permitted without license from IHS Not for Resale

k) If required, repeat steps b) through j) for each channel where measurements are required.

7.3.5 Presentation of results

a) Calculate the average radio-frequency power output (reference) using the following relationship:

$$\text{average } (T) = \frac{\sum_{i=1}^{N} (V_i)^2}{N} \text{ (reference)}$$

where

V_i is a sample of voltage taken in 7.3.4 step g);

N is the number of samples.

b) Calculate the average radio-frequency power output (spurious) using the following relationship:

$$\text{average } (S) = \frac{\sum_{i=1}^{N} (V_i)^2}{N} \text{ (spurious)}$$

where

V_i is a sample of the voltages taken in 7.4.4 step j).

N is the number of samples.

c) Calculate the average radio-frequency spurious power using the following relationship:

$$\text{average spurious power} = P_{avg} \times \frac{\text{average } (S)}{\text{average } (T)} \times 10^{\frac{[A(S)-A(T)]}{10}} \quad \text{(w)}$$

where

P_{avg} is the average transmitter output power measured in 7.2.3;

average(T) is the value calculated in step a);

average(S) is the value calculated in step b);

$A(T)$ is the attenuator value recorded in 7.3.4 step g);

$A(S)$ is the attenuator value recorded in 7.3.4 step j).

d) Record the transmitter frequency, the data signal parameters, the frequency of the spurious emission, and the average spurious power.

e) If required, repeat steps a) through d) for each channel measured in 7.3.4 step k).

7.4 Adjacent and alternate channel power (data)

7.4.1 Definitions

7.4.1.1 Adjacent and alternate channel power (data)

The adjacent and alternate channel power (data) of transmitters operating in systems allocated on a channel basis and in continuous mode, is that part of the total mean power output of a transmitter which falls within a specified bandwidth, centered on the centre frequency of either of the adjacent or first or second alternate channels.

Copyright International Electrotechnical Commission
Provided by IHS under license with IEC
No reproduction or networking permitted without license from IHS Not for Resale

7.4.1.2 Adjacent and alternate channel power due to modulation (data)

The adjacent and alternate channel power due to modulation (data) of transmitters operating in systems allocated on a channel basis and in burst repetition mode, is that part of the total mean power output of a transmitter resulting from the modulation which falls within the specified bandwidth centered on the centre frequency of either of the adjacent or first or second alternate channels during the burst.

7.4.1.3 Adjacent and alternate channel power due to switching transients (data)

The adjacent and alternate channel power due to switching transients (data) of transmitters operating in systems allocated on a channel basis and in burst repetition mode, is the greatest mean of that part of the total power resulting from the ramping-on and ramping-off of a transmitter, which falls within the specified bandwidth centered on the centre frequency of either of the adjacent or first or second alternate channels.

7.4.1.4 Adjacent and alternate channel power during a burst period (data)

The adjacent and alternate channel power during a burst period (data) of transmitters operating in systems allocated on a channel basis and in burst repetition mode, is that part of the total mean power output of a transmitter during a burst period which falls within the specified bandwidth centered on the centre frequency of either of the adjacent or first or second alternate channels during the burst.

7.4.2 Method of measurement – Type 1: continuous emission, capable of unmodulated carrier transmission

This method uses a power measuring receiver. This power measuring receiver has its –6 dB response frequencies displaced from the transmitter carrier frequency by amounts derived from the channel spacing. This measurement provides the ratio, expressed in decibels, of the average power to the average adjacent channel power. For the purpose of this measurement, this ratio is called the “adjacent channel power ratio (data)”.

See annex B, clause B.3 for the required characteristics of the power measuring receiver.

NOTE 1 – This measurement requires knowledge of the average power (data) (see 7.2.5).

NOTE 2 – For the first or second alternate channel measurement, the words “adjacent channel” should be replaced by “alternate channels” or “first alternate channel” or “second alternate channel” and the phrase “the channel spacing minus one-half of the specified bandwidth” in step f) should be replaced by “two channel spacing minus one-half of the specified bandwidth” or “three channel spacing minus one-half of the specified bandwidth” respectively.

a) Connect the equipment as illustrated in figure 11, using a power measuring receiver of specified selectivity.

b) Operate the transmitter unmodulated at the average power (data) as measured in 7.3.5.

c) Set the i.f. attenuator to a high value, for example 70 dB, then adjust the coupler/attenuator to provide a signal level which is within the linear range of the power measuring receiver.

d) Adjust the frequency of the local oscillator to obtain a maximum reading on the r.m.s. meter. Record this reading, and the attenuation of the i.f. attenuator, in decibels.

e) Increase the frequency of the local oscillator until the indication on the r.m.s. meter is reduced by 6 dB. Record the frequency of the local oscillator.

f) Increase the frequency of the local oscillator by an additional amount equal to the channel spacing minus one-half of the specified bandwidth. The reference frequency of the power measuring receiver is thus adjusted to the lower (“upper” for step k)) band edge of the upper (“lower” for step k)) adjacent channel. The local oscillator frequency can be lower or higher than the frequency of the transmitter but should be kept within steps e) to h).

Table 1 provides several of the commonly used specified channel spacings and bandwidths.

Copyright International Electrotechnical Commission
Provided by IHS under license with IEC
No reproduction or networking permitted without license from IHS Not for Resale

Table 1 – Commonly used specified channel spacings and bandwidths

Channel spacing kHz	Modulation	Data rate b kbps	Specified bandwidth Bs kHz	PMR filter bandwidth kHz	Reference frequency displacement kHz
50	QPSK	42	21	21	39,5
25	GMSK	16	16	16	17
12,5	GMSK	8	8,5	8,5	8,25
NOTE – Specified bandwidths (Bs) are specified by the equipment specification for the measurement of adjacent channel power. Bs is related to the necessary bandwidth defined in Article 1, No. 146 of the ITU Radio Regulations.					

g) Apply to the transmitter the maximum number of input signals, at the levels, required by the specified system, and operate it.

h) Adjust the i.f. attenuator until the indication of the r.m.s. meter is approximately the same as was recorded in step c). Record the reading of the r.m.s. meter and the attenuation of the i.f. attenuator, in decibels.

i) The adjacent channel power ratio, A, is the difference of the attenuation values, recorded in steps d) and h), corrected for the difference in readings of the r.m.s. meter in these steps. Record this value.

j) Remove the modulation from the transmitter, and set the i.f. attenuator to the value recorded in step d).

k) Repeat steps e) through i), but decrease the frequency of the local oscillator used in steps e) and f).

7.4.3 Presentation of results

a) Calculate and state the power, $P_{(\text{adjacent channel})}$, in each of the adjacent channels from the ratios A recorded in step i) above and the carrier power P_{avg} measured as described in 7.2.5.

$$P_{(\text{adjacent channel})} = P_{\text{avg}} \times 10^{-A/10} \quad \text{(w)}$$

b) Record the transmitter frequency and the largest $P_{(\text{adjacent channel})}$ calculated in step a) as the adjacent channel power (data).

c) Calculate and state the –6 dB bandwidth of the power measuring receiver. This is the difference between the two values of the local oscillator frequency recorded in successive iterations of step e) of 7.4.2.

7.4.4 Method of measurement – Type 2: continuous emission, allowed state

This method uses a power measuring receiver. This power measuring receiver has its –6 dB response frequencies displaced from the transmitter carrier frequency by amounts derived from the channel spacing. This measurement provides the ratio, expressed in decibels, of the average power to the average adjacent channel power. For the purpose of this measurement, this ratio is called the “adjacent channel power ratio (data)”.

See annex B, clause B.3 for the required characteristics of the power measuring receiver.

NOTE 1 – This measurement requires knowledge of the average power (data) (see 7.2.5) and the frequency of the transmitter (see 7.1.3 and 7.1.8).

NOTE 2 – For the first or second alternate channel measurement, the words “adjacent channel” should be replaced by “alternate channels” or “first alternate channel” or “second alternate channel” and the phrase “the channel spacing minus one-half of the specified bandwidth” in step f) should be replaced by “two channel spacing minus one-half of the specified bandwidth” or “three channel spacing minus one-half of the specified bandwidth” respectively.

--`,,`,,`-`-`,,`,,`,`,,`---

Copyright International Electrotechnical Commission
Provided by IHS under license with IEC
No reproduction or networking permitted without license from IHS Not for Resale

a) Connect the equipment as illustrated in figure 12, using a power-measuring receiver of the specified selectivity.

b) Operate the transmitter at the average power (data) as measured in 7.2.5

c) Set the i.f. attenuator to a high value, for example 70 dB, then adjust the coupler/attenuator to provide a signal level which is within the linear range of the power measuring receiver.

d) Adjust the frequency of the local oscillator to obtain a maximum reading on the r.m.s. meter. Record this reading, and the attenuation of the i.f. attenuator, in decibels.

e) Adjust the frequency of the radio-frequency signal generator to equal the frequency of the transmitter (see 7.1.3 and 7.1.8).

f) Replace the transmitter with the radio-frequency signal generator. Increase the frequency of the local oscillator until the indication on the r.m.s. meter is reduced by 6 dB. Record the frequency of the local oscillator.

g) Increase the frequency of the local oscillator by an additional amount equal to the channel spacing minus one-half of the specified bandwidth. The reference frequency of the power measuring receiver is thus adjusted to the lower ("upper" for step m)) band edge of the upper ("lower" for step m)) adjacent channel. The local oscillator frequency can be lower or higher than the frequency of the transmitter but should be kept within steps f) to j).

The following table provides several of the commonly used specified channel spacings and bandwidths.

Table 2 – Commonly used specified channel spacings and bandwidths

Channel spacing	Modulation	Data rate b	Specified bandwidth Bs	PMR filter bandwidth	Reference frequency displacement
kHz		kbps	kHz	kHz	kHz
50	QPSK	42	21	21	39,5
25	GMSK	16	16	16	17
12,5	GMSK	8	8,5	8,5	8,25
NOTE – Specified bandwidths (Bs) are specified by the equipment specification for the measurement of adjacent channel power. Bs is related to the necessary bandwidth defined in Article 1, No. 146 of the ITU Radio Regulations.					

h) Replace the radio-frequency generator with the transmitter.

i) Apply to the transmitter the maximum number of input signals, at the levels required by the specified system and operate it.

j) Adjust the i.f. attenuator until the indication of the r.m.s. meter is approximately the same as was recorded in step c). Record the reading of the r.m.s. meter and the attenuation of the i.f. attenuator, in decibels.

k) The adjacent channel power ratio, A, is the difference of the attenuation values, recorded in steps d) and j), corrected for the difference in readings of the r.m.s. meter in these steps. Record this value.

l) Remove the modulation from the transmitter and set the i.f. attenuator to the value recorded in step d).

m) Repeat steps e) through k), but decrease the frequency of the local oscillator in steps f) and g).

7.4.5 Presentation of results

a) Calculate and state the power, $P_{(\text{adjacent channel})}$, in each of the adjacent channels from the ratio A recorded in step j) and the carrier power P_{avg} measured as described in 7.2.5.

$$P_{(\text{adjacent channel})} = P_{\text{avg}} \times 10^{-A/10} \quad \text{(w)}$$

Copyright International Electrotechnical Commission
Provided by IHS under license with IEC
No reproduction or networking permitted without license from IHS Not for Resale

b) Record the largest $P_{(\text{adjacent channel})}$ calculated in step a) as the adjacent channel power (data). Record the transmitter frequency.

c) Calculate and state the –6 dB bandwidth of the power measuring receiver. This is the difference between the two values of the local oscillator frequency recorded successively in step f) of 7.4.4.

7.4.6 Method of measurement – Type 3: continuous emission, modulated carrier

This method uses a power measuring receiver. This power measuring receiver has its –6 dB response frequencies displaced from the transmitter carrier frequency by amounts derived from the channel spacing. This measurement provides the ratio, expressed in decibels, of the average power to the average adjacent channel power. For the purpose of this measurement, this ratio is called the "adjacent channel power ratio (data)".

See annex B, clause B.3 for the required characteristics of the power measuring receiver.

NOTE 1 – This measurement requires knowledge of the average power (data) (see 7.2.5) and the average frequency measured in 7.1.4 or 7.1.5 depending on the modulating data.

NOTE 2 – For the first or second alternate channel measurement, the words "adjacent channel" should be replaced by "alternate channels" or "first alternate channel" or "second alternate channel" and the phrase "the channel spacing minus one-half of the specified bandwidth" in step f) should be replaced by "two channel spacing minus one-half of the specified bandwidth" or "three channel spacing minus one-half of the specified bandwidth", respectively.

a) Connect the equipment as illustrated in figure 12, using a power measuring receiver of specified selectivity.

b) Apply to the transmitter the maximum number of input signals at the levels required by the specified system. Operate the transmitter at the average power (data) as measured in 7.2.5.

c) Set the i.f. attenuator to a high value, for example 70 dB, then adjust the coupler/attenuator to provide a signal level which is within the linear range of the power measuring receiver.

NOTE 3 – For the keying modulation of which roll-off factor transmitter percentage (see 2.17.2.2) is far below 100 %, the carrier level should be measured using a sufficiently wider bandwidth than the specified bandwidth because the transmitted spectrum is wider than the receiver bandwidth. If such a bandwidth is not available, the carrier level should be calculated using the radio-frequency signal generator substitution.

d) Adjust the frequency of the radio-frequency signal generator to equal the average frequency of the transmitter.

e) Replace the transmitter with the radio-frequency signal generator. Increase the frequency of the local oscillator until the indication on the r.m.s. meter is reduced by 6 dB. Record the frequency of the local oscillator.

f) Increase the frequency of the local oscillator by an additional amount equal to the channel spacing minus one-half of the specified bandwidth. The reference frequency of the power measuring receiver is thus adjusted to the lower ("upper" for step i)) band edge of the upper ("lower" for step i)) adjacent channel. The local oscillator frequency can be lower or higher than the frequency of the transmitter but should be kept within steps e) to h).

The following table provides several of the commonly used specified channel spacing and bandwidth.

Table 3 – Commonly used specified channel spacings and bandwidths

Channel spacing kHz	Modulation	Data rate b kbps	Specified bandwidth Bs kHz	PMR filter bandwidth kHz	Reference frequency displacement kHz
50	QPSK	42	21	21	39,5
25	GMSK	16	16	16	17
12,5	GMSK	8	8,5	8,5	8,25
NOTE – Specified bandwidths (Bs) are specified by the equipment specification for the measurement of adjacent channel power. Bs is related to the necessary bandwidth defined in Article 1, No. 146 of the ITU Radio Regulations.					

Copyright International Electrotechnical Commission
Provided by IHS under license with IEC
No reproduction or networking permitted without license from IHS Not for Resale

g) Replace the radio-frequency generator with the transmitter.

h) Adjust the i.f. attenuator until the indication of the r.m.s. meter is approximately the same as was recorded in step c). Record the attenuation, in decibels.

i) Repeat steps e) through h), but decrease the frequency of the local oscillator in steps e) and f).

7.4.7 Presentation of results

a) Calculate and state the power, $P_{(\text{adjacent channel})}$, in each of the adjacent channels from the ratio A recorded in step h) and the carrier power P_{avg} measured as described in 7.3.5:

$$P_{(\text{adjacent channel})} = P_{avg} \times 10^{-A/10} \quad \text{(w)}$$

b) Record the largest $P_{(\text{adjacent channel})}$ calculated in step a) as the adjacent channel power (data). Record the transmitter frequency.

c) Calculate and state the –6 dB bandwidth of the power measuring receiver. This is the difference between the two values of the local oscillator frequency recorded successively in step e) of 7.4.6.

7.4.8 Method of measurement – Type 3: continuous emission, modulated carrier

This method of measurement uses a digital storage spectrum analyser to measure the power.

NOTE 1 – For the first or second alternate channel measurement, the words “adjacent channel” should be replaced by “alternate channels” or “first alternate channel” or “second alternate channel”.

a) Connect the equipment as illustrated in figure 11, using a digital storage spectrum analyser.

b) Apply to the transmitter the maximum number of input signals at the levels required by the specified system. Operate the transmitter at the average power (data) as measured in 7.2.5.

c) Adjust the spectrum analyser as follows:

- set the resolution and video filter bandwidth to the lowest possible setting, but not less than the specified bandwidth divided by 200 nor greater than the specified bandwidth divided by 40, and record this as R.
- set the total swept bandwidth to the lowest possible setting which is equal to or greater than the specified bandwidth and record this as B.
- set the sweep time to greater than $3B/R^2$.
- set the coupler attenuation to a value which is compatible with the input characteristics of the spectrum analyser.

The following table provides several of the commonly used specified channel spacings and bandwidths.

Table 4 – Commonly used specified channel spacings and bandwidths

Channel spacing kHz	Modulation	Data rate b kbps	Specified bandwidth Bs kHz	PMR filter bandwidth kHz	Reference frequency displacement kHz
50	QPSK	42	21	21	39,5
25	GMSK	16	16	16	17
12,5	GMSK	8	8,5	8,5	8,25
NOTE – Specified bandwidths (Bs) are specified by the equipment specification for the measurement of adjacent channel power. Bs is related to the necessary bandwidth defined in Article 1, No. 146 of the ITU Radio Regulations.					

d) Adjust the spectrum analyser so that the centre of the displayed figure coincides with the average frequency of the transmitter as measured in 7.1.4 or 7.1.5.

Copyright International Electrotechnical Commission
Provided by IHS under license with IEC
No reproduction or networking permitted without license from IHS Not for Resale

e) Adjust the coupler attenuation and the sensitivity of the spectrum analyser to values suitable to provide a displayed figure on the screen which is in the linear range of the spectrum analyser.

f) Operate the digital storage spectrum analyser to record the values *Ci* in dBm for at least 200 samples uniformly distributed throughout the specified bandwidth. Calculate and record the indicated carrier power.

NOTE 2 – For the keying modulation of which roll-off factor transmitter percentage is far below 100 %, the total swept band width should be sufficiently wide with respect to the specified bandwidth and *Ci* should be recorded throughout the total swept bandwidth.

$$P_c = 10 \lg \sum_{i=1}^{N} 10^{Ci/10} \quad \text{(dBm)}$$

where *N* is the number of samples.

g) Adjust the spectrum analyser so that the centre of the displayed figure coincides with the centre frequency of the upper (“lower” for step i)) adjacent channel.

h) Operate the digital storage spectrum analyser to record the values A_i in dBm for the same number of samples used in step f) uniformly distributed throughout the specified bandwidth. Calculate and record the indicated adjacent channel power:

$$P_a = 10\lg \sum_{i=1}^{N} 10^{Ai/10} \quad \text{(dBm)}$$

where *N* is the number of samples.

i) Using the lower adjacent channel repeat steps g) and h).

7.4.9 Presentation of results

a) Calculate the ratio P_r for the upper adjacent channel using the following relationship:

$$P_r = P_c - (P_a + 1) \quad \text{(dB)}$$

where

P_c is the value recorded in 7.4.8, step f);

P_a is the value recorded in 7.4.8, step h) for the upper adjacent channel.

NOTE – For an explanation of the 1 dB in the equation, see 4.2.5.4 in IEC 60489-2.

b) Repeat step a) for the lower adjacent channel.

c) Record the lower value of P_r calculated in steps a) and b) as the adjacent channel power ratio (data).

d) Calculate the power (adjacent channel) $P_{(\text{adjacent channel})}$ using the following relationship:

$$P_{(\text{adjacent channel})} = P \times 10^{\text{ ACPR/10}} \quad \text{(dBm)}$$

where

P is the carrier power measured in 7.2.2 in watts;

ACPR is the value recorded in step c),

Record this value as the adjacent channel power (data).

e) Record the channel spacing, the specified bandwidth and the carrier power.

7.4.10 Method of measurement – Type 4: short emission, modulated carrier

This method of measurement uses a power measuring receiver to measure the power and the power measuring receiver uses digital signal processor (DSP) technology for realizing the channel band-pass filter.

Copyright International Electrotechnical Commission
Provided by IHS under license with IEC
No reproduction or networking permitted without license from IHS Not for Resale

a) Connect the equipment as illustrated in figure 11.

b) Modulate the transmitter on a traffic channel with pseudo-random data field bits. The output of the transmitter will be on only during the time slots corresponding to the traffic channel. The transmitter operates at the average power (data) as measured in 7.3.5.

c) Adjust the coupler attenuation to a value which is compatible with the input characteristics of the power measuring receiver.

d) Adjust the centre frequency of the power-measuring receiver to the operating frequency of the transmitter. Measure the level with the same method as 7.2.3 using the digital band-pass filter of sufficiently wider bandwidth than the specified bandwidth.

e) Adjust the centre frequency of the power-measuring receiver to the adjacent channels, the first alternate channels, and the second alternate channels. Write the output data into the memory.

f) Read the data from memory and calculate the adjacent, first and second alternate channels power due to modulation (data), due to switching transients (data) and during a burst period (data), according to the definitions. Display the larger one for each definition.

8 Audio-frequency band measurements of encoder output characteristics (selective calling)

8.1 Tone pulse-rise time (selective calling)

8.1.1 Definition

The tone pulse-rise time is the interval during which the amplitude of the pulse envelope increases from 10 % to 90 % of its steady-state value.

8.1.2 Method of measurement

a) Terminate the encoder output with the load specified by the manufacturer.

b) Connect the vertical display of an oscilloscope in parallel with the output load and adjust the encoder in accordance with the manufacturer's instructions. Derive the synchronizing pulse for the calibrated horizontal sweep of the oscilloscope from the signal that starts the encoder sequence.

c) Arrange for the encoder to send a single standard coded test signal (see 2.23) and measure the interval during which the pulse envelope value increases from 10 % to 90 % of its steady-state value.

d) This measurement may be repeated for any other coded signal.

8.2 Tone pulse duration (selective calling)

8.2.1 Definition

The duration of a tone pulse is the interval between the first and last instants during which the amplitude of the pulse envelope exceeds 50 % of its steady-state value.

8.2.2 Method of measurement

a) Terminate the encoder output with the load impedance specified by the manufacturer.

Copyright International Electrotechnical Commission
Provided by IHS under license with IEC
No reproduction or networking permitted without license from IHS Not for Resale

b) Connect the vertical display of an oscilloscope in parallel with the output load and adjust the encoder in accordance with the manufacturer's instructions. Derive the synchronizing pulse for the calibrated horizontal sweep of the oscilloscope from the signal that starts the encoder sequence.

c) Arrange for the encoder to send a single-tone pulse and measure the interval between the first and last instants during which the amplitude of the pulse envelope exceeds 50 % of its steady-state value.

d) This measurement may be repeated for any other tone pulses.

e) For sequential tone systems, this method can be used to determine:

   – the duration of individual tone pulses;

   – the pulse-spacing time, for example, the interval during which the amplitude of the pulses is less than 10 % of the maximum amplitude;

   – the total duration of a single coded signal.

8.3 Tone pulse-decay time (selective calling)

8.3.1 Definition

The tone pulse-decay time is the interval between the instants during which the amplitude of the pulse envelope decreases from 90 % to 10 % of its steady-state value.

8.3.2 Method of measurement

a) Terminate the encoder output with the load specified by the manufacturer.

b) Connect the vertical display of an oscilloscope in parallel with the output load and adjust the encoder in accordance with the manufacturer's instructions. Derive the synchronizing pulse for the calibrated horizontal sweep of the oscilloscope from the signal that starts the encoder sequence.

c) Arrange for the encoder to send a single standard coded test signal and measure the time interval during which the amplitude of the pulse envelope decreases from 90 % to 10 % of its steady-state value.

8.4 Frequency of tone(s) (selective calling)

8.4.1 Definition

The frequency of the tone(s) is the fundamental frequency (or frequencies) of the tone(s) within the duration of one tone pulse.

8.4.2 Method of measurement

a) Terminate the output of the encoder with the load specified by the manufacturer.

b) Connect a period-measuring device in parallel with the output load.

c) Arrange for the encoder to send a single tone pulse.

d) Start the period-measuring device after the pulse envelope has reached its steady-state value.

e) Measure the period of at least 10 cycles of the tone frequency and compute the frequency from the period thus measured.

   NOTE – Alternatively, the frequency of a single-tone pulse may be measured with a frequency-counting test instrument if the tone pulse duration is significantly longer than the counting period of the measuring instrument.

f) For sequential tone systems, arrange for the encoder to send each tone pulse individually.

g) For simultaneous tone systems, band-pass filters, at the nominal frequency of the tone required to be measured, should be used to reject all other tones.

Copyright International Electrotechnical Commission
Provided by IHS under license with IEC
No reproduction or networking permitted without license from IHS Not for Resale

8.5 RMS voltage of tone(s) (selective calling)

8.5.1 Definition

The r.m.s. voltage of the tone output of the decoder is the r.m.s. voltage of the tone pulse measured when the output is correctly terminated.

8.5.2 Method of measurement

a) Terminate the encoder output with the load specified by the manufacturer.

b) Connect the vertical input of an oscilloscope in parallel with the output load and adjust the encoder according to the manufacturer's operating instructions.

c) Arrange for the encoder to send a single coded signal. Measure the peak-to-peak amplitude of any or all of the tone pulses.

d) Because the amplitude of the tones may depend on the tone frequency, measurements should be repeated until all possible tones have been measured.

e) For simultaneous tone systems, band-pass filters at the nominal frequencies of the coded signal should be used to reject all tones except the one to be measured.

f) The peak-to-peak values should be converted to r.m.s. values, assuming that the tones are sinusoidal.

NOTE – If the manufacturer provides a facility for adjustment to the amplitude, both the maximum and minimum amplitudes obtained should be recorded.

8.5.3 Presentation of results

If a large number of tones is involved, the results should be recorded in graphical form.

8.6 Encoder overall operate time (selective calling)

8.6.1 Definition

The encoder overall operate time is the elapsed time from the start of the encoder enabling sequence until the complete coded signal has been observed at the output terminals. See figure 13.

8.6.2 Method of measurement

a) Terminate the encoder output with the load specified by the manufacturer.

b) Connect the vertical display of an oscilloscope in parallel with the output load and adjust the encoder according to the manufacturer's instructions. Derive the synchronizing pulse for the calibrated horizontal scan of the oscilloscope from the signal that starts the encoder sequence.

c) Arrange for the encoder to send a signal and measure the overall operate time from the start of the scan until the amplitude of the envelope of the final pulse has fallen to 50 % of its steady-state value.

d) The measurement should be repeated for all coded signals having different initial tone frequencies.

8.6.3 Presentation of results

If the encoder overall operate is dependent on the initial tone frequency, the results should be recorded on a graph showing operate time versus frequency.

--`,,`,,`-`-`,,`,,`,`,,`---

Copyright International Electrotechnical Commission
Provided by IHS under license with IEC
No reproduction or networking permitted without license from IHS Not for Resale

9 Audio-frequency band measurements of decoder characteristics (selective calling)

9.1 Decoder operation level range (selective calling)

9.1.1 Definition

The decoder operating level range is the range of input levels over which the calling probability exceeds a specified value. Each input level of this range shall be expressed by its ratio in decibels to the nominal input level, specified by the manufacturer.

9.1.2 Method of measurement

a) Connect the equipment as shown in figure 14.

b) Apply the standard coded test signal to the input of the decoder at the nominal input level through a matching network as specified by the manufacturer.

c) Vary the input level in steps of 1 dB both below and above the specified nominal level and record the number of successful calls at each input level. Continue to vary the input level in steps of 1 dB until the calling probability is less than 80 %.

9.1.3 Presentation of results

Plot decoder relative input level versus calling probability as shown in figure 15. Record the input level corresponding to 0 dB. Record the number of trials.

9.2 Decoder attack time (selective calling)

9.2.1 Definition

The decoder attack time is the elapsed time from the instant that its intended coded signal at the decoder input terminals exceeds 10 % of the maximum steady-state value until the decoder successfully responds. If the response is an audio output, successful response is 50 % of the maximum steady-state output voltage (see figure 16).

For multi-tone decoders, the manufacturer shall specify the characteristics of the coded signal.

9.2.2 Method of measurement

a) Apply a standard coded test signal to the input of the decoder at the nominal input level through a matching network as specified by the manufacturer.

b) Display the input voltage to the decoder on one beam of a double-beam oscilloscope and connect the other beam across the alarm indicating circuits.

c) Measure the elapsed time from when the input signal exceeds 10 % of its maximum level to the time when the alarm circuit has reached 50 % of its steady-state output voltage.

NOTE – When the alarm circuit is only a means of de-muting an associated receiver, it may be necessary to feed an audio-frequency tone into the auxiliary circuit of the decoder to measure an audio response.

9.3 Decoder recovery time (selective calling)

9.3.1 Definition

The decoder recovery time is the minimum time that is needed between two successive encoded calling sequences to achieve a successful decoder response on the second encoder sequence.

This characteristic can be observed only when the decoder automatically resets.

Copyright International Electrotechnical Commission
Provided by IHS under license with IEC
No reproduction or networking permitted without license from IHS Not for Resale

9.3.2 Method of measurement

a) Connect an encoder or code simulator to the decoder, with means of recording the number of successful calls (see figure 14).

b) Arrange that the interval between two successive coded signals can be progressively varied from zero to a time equal to at least twice the recovery time stated by the manufacturer.

c) With the time interval at maximum, ensure that a satisfactory success rate is obtained. Reduce the time interval until a significant number of failures is observed, for example, up to 20 %.

This time interval is the decoder recovery time.

9.4 Decoder required protection time (selective calling)

9.4.1 Definition

The decoder required protection time is the maximum time during which a partially operated decoder may respond to other coded signals containing the complementary part of the standard coded test signal (see figure 17).

9.4.2 Method of measurement

a) Connect an encoder or code simulator to the decoder, with means of recording the number of successful calls (see figure 14).

b) Arrange that the encoder initially sends the first part of a particular code and, after an interval, adjustable up to the recovery time, sends the remaining part of the code.

c) With the time interval set to a minimum, ensure that a satisfactory success rate is obtained. Increase the time interval until a significant number of failures is observed, i.e. up to 20 %. This time interval is the decoder protection time.

NOTE – The decoder must be protected from complementary signals until they no longer result in a significant percentage of positive responses.

d) In individual tone sequential systems having more than two tones, it may be necessary to repeat this measurement with the time interval inserted in different positions of the code sequence.

9.5 Decoder alarm time (selective calling)

9.5.1 Definition

The decoder alarm time is the elapsed time between a successful decoder alarm response, i.e. the output voltage exceeding 50 % of its maximum steady-state value, and at cessation of alarm, the decrease of the output voltage to this 50 % value (see figure 16).

This characteristic can be observed only when the alarm is fitted with automatic cancellation.

9.5.2 Method of measurement

a) Arrange to display the alarm signal on an oscilloscope which has a calibrated time base.

NOTE – Should the alarm signal be of a form which cannot be readily displayed, then it may be necessary to arrange for an auxiliary signal to be provided to enable the measurement to be made, for example, an audio-frequency-tone, a d.c. voltage, etc.

b) Apply a standard coded test signal through a matching network, as specified by the manufacturer, to the input of the decoder, at the nominal input level.

c) Measure the duration of the alarm signal, i.e. the time from when the alarm signal first exceeds 50 % of the maximum steady-state amplitude to when it falls to the 50 % value (see figure 13).

Copyright International Electrotechnical Commission
Provided by IHS under license with IEC
No reproduction or networking permitted without license from IHS Not for Resale

d) If the alarm time is dependent upon the coded signal, the measurement should be repeated for the limiting values of the controlling element of the coded signal.

10 Overall measurements in simulated systems (selective calling)

10.1 General

In this section, system measurements are described in which the radio-frequency transmission medium must be simulated. It is imperative that the measuring arrangement is such that the test results will not be affected by undesired coupling between the transmitter and the receiver.

10.2 Supplementary conditions of measurement for system response times

a) Connect the system to be measured as shown in figure 18.

b) Except for continuous individual-tone systems, adjust the radio-frequency attenuation to produce the reference signalling sensitivity for the receiver/decoder.

c) For continuous individual-tone systems, adjust the radio-frequency attenuation to produce the standard input-signal level at the receiver antenna terminals.

10.3 System overall operate time (selective calling)

10.3.1 Definition

The system overall operate time is the elapsed time from the start of the encoder-enabling signal, this instant being simultaneous with the start of the transmit function and the moment when the decoder alarm successfully responds. If the response is an audio output, successful response is when the audio output reaches 50 % of the maximum steady-state output voltage (see figure 19).

NOTE – This method of measurement applies only when the encoder and transmitter are enabled simultaneously.

10.3.2 Method of measurement

a) Connect the vertical display of an oscilloscope in parallel with the decoder alarm-initiating circuit.

b) Derive the synchronizing pulse for the calibrated horizontal sweep of the oscilloscope from the encoder-enabling signal.

c) The system overall operate time is the interval between the start of the encoder-transmitter enabling signal and the moment when the decoder alarm-initiating circuit response reaches 50 % of the maximum steady-state output voltage.

d) Repeat this measurement for all coded signals having different initial tone frequencies.

NOTE – When the alarm circuit is only a means of de-muting the associated receiver, it may be necessary to simultaneously apply standard test modulation to the transmitter to measure the audio response or, alternatively, the rise-time of the signal that performs the de-muting function.

10.3.3 Presentation of results

If the overall operate time is dependent on the initial tone frequency, the results should be recorded on a graph showing overall operate time versus initial tone frequency.

10.4 System recovery time (selective calling)

10.4.1 Definition

The system recovery time is the minimum time needed between two successive encoded calling sequences to achieve a successful decoder response on the second encoder sequence.

Copyright International Electrotechnical Commission
Provided by IHS under license with IEC
No reproduction or networking permitted without license from IHS Not for Resale

This characteristic can be measured only when the decoder automatically resets.

10.4.2 Method of measurement

a) Connect an encoder or code simulator to the transmitter with a means of recording the number of successful calls.
b) Arrange that the interval between two successive coded signals can be varied from zero to a time at least twice the recovery time stated by the manufacturer.

With the time interval at maximum, ensure that a satisfactory success rate is obtained.

Reduce the time interval until a significant number of failures is observed, for example up to 20 %.

This time interval is the system recovery time.

11 Measurements of receiver-decoder radio-frequency parameter (integral antenna)

11.1 Radiation sensitivity (data)

11.1.1 General

The radiation sensitivity of a receiver may contain

– reference radiation sensitivity (MUS) (data),
– normal radiation sensitivity (SUS or MUS) (data),
– RFM radiation sensitivity (SUS or MUS) (data),
– RFCD (radio-frequency coupling device) radiation sensitivity (SUS or MUS) (data),
– average radiation sensitivity (SUS or MUS) (data),
– diversity radiation sensitivity (SUS or MUS) (data).

Receivers having an integral antenna or having no facility for connecting the external measuring equipment require special measuring arrangements. The arrangements for the former ones are test sites or RFCD and for the latter ones are the baseband signal connection arrangements. They are described in IEC 60489-1, annex A.

Deviations from standard atmospheric conditions may occur for measurements made out of doors. The actual conditions, however, should not cause the measurement results to deviate appreciably from those which have been obtained under standard test conditions.

11.1.2 Reference radiation sensitivity (MUS) (data)

11.1.2.1 Definition

The minimum field strength of a signal at a specified frequency with standard coded test signals (SCTS) which will produce the reference error ratio (data). It will be found in a horizontal plane direction.

NOTE – The reference sensitivity can be measured in OATS (open area test sites), LRTS (low reflection test sites) or AC (anechoic chambers). Measured values in OATS have possibilities of difference from the values measured in the two other test sites because of the ground-reflected wave effect.

Copyright International Electrotechnical Commission
Provided by IHS under license with IEC
No reproduction or networking permitted without license from IHS Not for Resale

11.1.2.2 Method of measurement for reference radiation sensitivity (MUS) (data)

a) Choose the test site and the measuring distance suitable for the frequency, the environmental conditions, the required measurement error and receiver dimensions, from those described in annex A of IEC 60489-1.

b) Calibrate the test site and place the receiver under test as illustrated in the chosen example of the above-mentioned annex.

c) Measure the sensitivity (MUS) according to the combination of the same method of measurement for receivers equipped with suitable antenna terminals (see 7.1) and the basic measuring procedure for radiation measurement described in the above chosen subclause. Record this level in microvolts.

d) Rotate the equipment under test 45° clockwise, in a horizontal plane, and measure this direction sensitivity (MUS) using the same procedure as in step c).

e) Repeat step d) until values have been obtained for eight azimuth positions.

f) Make a table of results and, if desired, plot them as points on a polar diagram.

g) If the results indicate that, at a particular azimuth angle, the level is significantly less than at other angles, determine the minimum level required to open the squelch, by proceeding as follows:

   – in the vicinity of the assumed azimuth for the minimum level, select smaller azimuthal rotation angles, for example 15°, and for each azimuthal position, measure the level. Record the lowest level.

The field strength is the reference radiation sensitivity (MUS) (data).

11.1.3 Normal radiation sensitivity (SUS or MUS) (data)

11.1.3.1 Definition

The field strength of a signal for the normal direction of a receiver, at a specified frequency with standard coded test signals (SCTS) which will produce the reference error ratio (data). The normal direction is specified by the manufacturer.

NOTE 1 – The normal direction of the equipment under test is usually the operation accessing side and is specified by the manufacturer. The normal direction may be the specific direction used for RFCD calibration measurements.

NOTE 2 – The normal radiation sensitivity can be measured in OATS (open area test sites), LRTS (low reflection test sites) or AC (anechoic chamber). Measured values in OATS have possibilities of difference from the values measured in the two other test sites because of the ground-reflected wave effect.

11.1.3.2 Method of measurement for normal radiation sensitivity (MUS) (data)

a) Choose the test site and the measuring distance suitable for the frequency, the environmental conditions, the required measurement error and receiver dimensions, from those described in annex A of IEC 60489-1.

b) Calibrate the test site and place the receiver under test as illustrated in the chosen example of the above-mentioned annex.

c) Measure the sensitivity (MUS) (data) for the normal direction of the equipment, according to the combination of the same method of measurement for receivers equipped with suitable antenna terminals (see 7.1) and the basic measuring procedure for radiation measurement described in the above chosen subclause. Record this level in microvolts.

The field strength is the normal radiation sensitivity (MUS) (data).

11.1.3.3 Compliance test method – Normal radiation sensitivity (SUS) (data)

a) Choose the test site and the measuring distance suitable for the frequency, the environmental conditions, the required measurement error and receiver dimensions, from those described in annex A of IEC 60489-1.

Copyright International Electrotechnical Commission
Provided by IHS under license with IEC
No reproduction or networking permitted without license from IHS Not for Resale

b) Calibrate the test site and place the receiver under test as illustrated in the chosen example of the above-mentioned annex.

c) Execute and judge with the same procedure of the sensitivity (SUS) (data) for receivers equipped with suitable antenna terminals (see 7.2)

11.1.4 RFM radiation sensitivity (SUS or MUS) (data)

This method is under consideration.

11.1.5 RFCD radiation sensitivity (SUS or MUS) (data)

11.1.5.1 Definition

Radiation sensitivity (SUS or MUS) (data) measured in a calibrated RFCD at the determined position and direction.

11.1.5.2 Method of measurement for RFCD radiation sensitivity (MUS) (data)

a) Choose the RFCD suitable for the frequency, the environmental conditions and receiver dimensions, from those described in annex A of IEC 60489-1.

b) Calibrate the RFCD and place the receiver under test as described in the chosen RFCD in the above annex. The receiver output should be connected to the comparator (data) using one of the baseband connection arrangements described in the above annex.

c) Measure the RFCD input-signal level which will result in the reference error ratio with the same method for receivers equipped with suitable antenna terminals (see 7.1). Read the calibrated value for the RFCD input-signal level.

NOTE – A similar measurement to 11.1.2 or 11.1.6 is possible with a similar rotating measurement.

11.1.5.3 Compliance test – RFCD radiation sensitivity (SUS)

a) Choose the RFCD suitable for the frequency, the environmental conditions and receiver dimensions, from those described in annex A of IEC 60489-1.

b) Calibrate the RFCD and place the receiver under test as described in the chosen RFCD in the above annex. The receiver output should be connected to the comparator (data) using one of the base band connection arrangement described in that annex.

c) Execute and judge with the same procedure of the sensitivity (SUS) (data) for receivers equipped with suitable antenna terminals (see 7.2).

NOTE – A similar measurement to 11.1.6.4 is possible with a similar rotating measurement.

11.1.6 Average radiation sensitivity (SUS or MUS) (data)

11.1.6.1 Definition

The average of eight field strength measurements at a specified frequency with standard coded test signals (SCTS) each producing the reference error ratio (data) when the receiver under test is rotated in 45° azimuth increments starting at the normal direction.

NOTE 1 – The normal direction of the equipment under test is usually the operation accessing side and is specified by the manufacturer.

NOTE 2 – The average radiation sensitivity (SUS or MUS) (data) can be measured in OATS (open area test sites), LRTS (low reflection test sites) or AC (anechoic chambers). Measured values in OATS have possibilities of difference from the values measured in the two other test sites because of the ground-reflected wave effect.

11.1.6.2 Method of measurement for average radiation sensitivity (MUS) (data)

Perform steps a) to f) of 11.1.2.2.

Copyright International Electrotechnical Commission
Provided by IHS under license with IEC
No reproduction or networking permitted without license from IHS Not for Resale

11.1.6.3 Presentation of results

Calculate the average of the eight levels recorded in steps e) and f) of 11.1.2.2. Record this value.

11.1.6.4 Compliance test – Average radiation sensitivity (SUS) (data)

a) to c) Perform steps a) to c) of 11.1.3.3.

d) Rotate the equipment under test 45° clockwise in a horizontal plane and repeat step c) until eight azimuth positions have been tested.

e) If for five or more of the positions, a compliance with the specification has been recorded, record that the equipment does comply with the average radiation sensitivity (SUS) specification; otherwise record that it does not comply.

11.1.7 Diversity radiation sensitivity (SUS or MUS) (data)

This method is under consideration.

11.2 Selectivity (data)

Selectivity (data) of receiver with integral antennas is recommended to be measured in an RFCD. The input of RFCD is measured with the same method for receivers equipped with suitable antenna terminal (see 4.2 to 4.6). The input of RFCD can be calibrated by the calibration method described in IEC 60489-1, annex A.

The selectivity may be measured in a test site if the test site is clear about the interfering problem described in the above annex.

The selectivity can be evaluated by measuring

– adjacent signal selectivity,

– adjacent channel selectivity,

– cross-modulation,

– spurious response immunity, and

– intermodulation immunity.

11.3 Acceptable radio-frequency displacement

Acceptable radio-frequency displacement of a receiver with integral antennas is recommended to be measured in an RFCD. The input of RFCD is measured with the same method for a receiver equipped with suitable antenna terminal (see 4.8). The input of an RFCD can be calibrated by the calibration method described in IEC 60489-1, annex A.

11.4 Impulsive-noise tolerance (integral antenna)

Degradation measurement of a receiver with integral antennas is recommended to be measured in an RFCD. The input of RFCD is measured with the same method for a receiver equipped with suitable antenna terminal (see 4.9). The input of an RFCD can be calibrated by the calibration method described in IEC 60489-1, annex A.

Copyright International Electrotechnical Commission
Provided by IHS under license with IEC
No reproduction or networking permitted without license from IHS Not for Resale

12 Measurements of encoder-transmitters radio-frequency parameters (integral antenna)

12.1 Radiated radio-frequency power (data)

12.1.1 General

The measured levels may be due to the radiation from the antenna, audio lines, control lines, power mains or from the cabinet. These measurements generally require the use of a test site or an RFCD. Guides for the use of such test sites and RFCDs are given in IEC 60489-1, annex A.

12.1.2 Average radiated power (data)

12.1.2.1 Definition

The average of the radiated powers (data) in eight directions distributed at 45° angles in the horizontal plane.

NOTE – The average radiated power (data) can be measured in OATS (open area test sites) or in LRTS (low reflection test sites) or in AC (anechoic chambers). Measured values in OATS have possibilities of difference from the values measured in the two other test sites because of the ground-reflected wave effect.

12.1.2.2 Method of measurement for average radiated power (data)

a) Choose the test site and the measuring distance suitable for the frequency, the environmental conditions, the required measurement error and transmitter dimensions, from those described in annex A of IEC 60489-1.

b) Place the equipment under test as illustrated in the corresponding subclause of the above annex. Connect the output of the selective measuring device to the power measuring device described in the subclause concerning the method of measurement for the radio-frequency output power (data) of transmitters equipped with suitable antenna terminals (see 7.2). Calibrate the test site.

c) Measure the normal direction radiated power (data) according to the combination of the same method of measurement for transmitters equipped with suitable antenna terminals (see 7.2) and the basic measuring procedure for radiation measurement described in the above chosen subclause.

   NOTE – The normal direction of the equipment under test is usually the operation side and is specified by the manufacturer. The normal direction may be the specific direction used for RFCD calibration measurements.

d) Rotate the equipment under test 45° clockwise and measure this direction radiated power (data) using the same procedure as in step c).

e) Repeat step d) until values have been obtained for eight azimuth positions.

12.1.2.3 Presentation of results

Calculate the average of eight values measured in steps c) and d). Record measurement conditions of the test site.

12.1.3 Maximum effective radiated power (data)

12.1.3.1 Maximum effective radiated power (data) in the horizontal plane

12.1.3.1.1 Definition

The maximum effective radiated power (data) on the horizontal plane.

NOTE – The maximum radiated power (data) can be measured in OATS, LRTS or AC. Measured values in OATS have possibilities of difference from the values measured in the two other test sites because of the ground-reflected wave effect.

Copyright International Electrotechnical Commission
Provided by IHS under license with IEC
No reproduction or networking permitted without license from IHS Not for Resale

12.1.3.1.2 Method of measurement for maximum effective radiated power (data) on the horizontal plane

a) Choose the test site and the measuring distance suitable for the frequency, the environmental conditions, the required measurement error and transmitter dimensions, from those described in annex A of IEC 60489-1.

b) Place the transmitter under test as illustrated in the corresponding subclause of the above annex. Connect the output of the selective measuring device to the power measuring device described in the subclause concerning the method of measurement for the radio-frequency output power (data) of transmitters equipped with suitable antenna terminals (see 7.2). Calibrate the test site.

c) Measure the normal direction radiated power (data) according to the combination of the same method of measurement for transmitters equipped with suitable antenna terminals (see 7.2) and the basic measuring procedure for radiation measurement described in the above chosen subclause.

NOTE – The normal direction of the equipment under test is usually the operation side and is specified by the manufacturer. The normal direction may be the specific direction used for RFCD calibration measurements.

d) Rotate the transmitter under test in the horizontal plane and find the direction which has the maximum indication on the power measuring device. Note the maximum indication.

12.1.3.1.3 Presentation of results

Calculate the maximum effective radiated power on the horizontal plane and record the direction in step d).

12.1.3.2 Maximum effective radiated power (data) on a spherical surface

12.1.3.2.1 Definition

The maximum effective radiated power (data) observed on a closed surface surrounding an antenna.

NOTE – The maximum radiated power (data) can be measured in LRTS or in AC.

12.1.3.2.2 Method of measurement for maximum effective radiated power (data) on a spherical surface

a) to c) Perform steps a) to c) in 12.1.3.1.2

d) Rotate the transmitter under test in the horizontal plane and find the direction which has the maximum indication on the power measuring device.

e) Rotate the transmitter under test 90° in the vertical plane, keeping the direction found in step d) to the measuring antenna.

f) Orient the measuring antenna so that it is horizontally polarized. Rotate the transmitter under test in the horizontal plane and note the maximum indication. This will be the direction which has the maximum radiated power on a spherical surface.

g) If an other direction presents the more radiated power, confirm it for that direction, repeating steps d) to f).

12.1.3.2.3 Presentation of results

Calculate the maximum effective radiated power in step f) and record the direction in step d) as the horizontal plane direction and the direction in step f) as the vertical plane direction.

12.1.4 Random field measurement (RFM) radiated power (data)

12.1.4.1 Definition

The median of radiated power measurements taken along a random path in a random field.

NOTE – The RFM radiated power (data) can be measured in an RFM site.

Copyright International Electrotechnical Commission
Provided by IHS under license with IEC
No reproduction or networking permitted without license from IHS Not for Resale

12.1.4.2 Method of measurement for RFM radiated power (data)

a) Confirm the construction parameter of the RFM site and place the transmitter under test as illustrated in annex A of IEC 60489-1. In the case of a type 4 (short emission, modulated carrier), the micro-computer described in the annex A should have the same function as the waveform recorder described in the subclause concerning the method of measurement for the radio-frequency output power (data) of transmitters equipped with suitable antenna terminals (see 7.2.3).

b) Measure the RFM radiated power (data) according to the combination of the same method of measurement for transmitters equipped with suitable antenna terminals (see 7.2) and the basic measuring procedure for radiation measurement described in annex A of IEC 60489-1.

12.1.4.3 Presentation of results

Record the RFM radiated power, the path length and the DDD value measured in 12.1.4.2 step b).

NOTE – DDD value express the measuring error or repeatability in the test site evaluation measurement described in annex A of IEC 60489-1.

12.1.5 RFCD radiated power (data)

12.1.5.1 Definition

The signal level at the output of an RFCD, in which the transmitter under test operates, calibrated by the specific direction radiated power in a test site.

12.1.5.2 Method of measurement for RFCD radiated power (data)

a) Choose an RFCD for the frequency and size of transmitter under test from those described in annex A of IEC 60489-1.

b) Calibrate or confirm the calibration value for the output signal level of RFCD. The calibration should be performed with the calibration method for the chosen RFCD described in the subclause of the above annex.

c) Place the transmitter under test in the specified position and specified direction and activate the transmitter.

d) Measure the output level of the RFCD according to the same method of measurement for transmitters equipped with suitable antenna terminals (see 7.2).

NOTE 1 – A similar measurement to 12.1.2 or 12.1.3.1 on a horizontal plane is possible with a similar rotating measurement.

NOTE 2 – The similar measurement to 12.1.3.2 is possible with a similar rotating measurement if the coupling difference of the chosen RFCD is specified for the EUT height difference. EUT height will differ under global direction rotation.

12.1.5.3 Presentation of results

Calculate the RFCD radiated power (data) from the relation of the values in step b) and step d). Record the position, the direction of the transmitter under test in the RFCD and the calibration value.

12.1.6 Radiated spurious narrow-bandwidth emission power (data)

The methods of measurement for the radiated spurious narrow-bandwidth emission power (data) are principally the same as those of radiated radio-frequency power (data) described in 12.1.2 to 12.1.5. The only different condition for the radiated spurious measurement is the presence of very high level carrier. Therefore, the measurement conditions are the same as the combination of the above radiated power measurement and the measurement of the terminal spurious narrow-bandwidth radio-frequency emission power in 7.3.

Copyright International Electrotechnical Commission
Provided by IHS under license with IEC
No reproduction or networking permitted without license from IHS Not for Resale

The different kinds of radiated, spurious narrow-bandwidth emission power (data) are as follows:

– average radiated spurious narrow-bandwidth emission power (data);
– maximum effective radiated spurious narrow-bandwidth emission power (data);
– RFM radiated spurious narrow-bandwidth emission power (data);
– RFCD radiated spurious narrow-bandwidth emission power (data).

12.1.7 Radiated adjacent and alternate channel power (data)

12.1.7.1 Definitions

The radiated adjacent and alternate channel power from transmitters with integral antennas.

12.1.7.1.1 Adjacent and alternate channel power (data)

The adjacent and alternate channel power (data) of transmitters operating in systems allocated on a channel basis and in continuous mode, is that part of the total mean power output of a transmitter which falls within a specified bandwidth centered on the centre frequency of either of the adjacent or first or second alternate channels.

12.1.7.1.2 Adjacent and alternate channel power due to modulation (data)

The adjacent and alternate channel power, due to modulation (data) of transmitters operating in systems allocated on a channel basis and in burst repetition mode, is that part of the total mean power output of a transmitter resulting from the modulation which falls within the specified bandwidth centered on the centre frequency of either of the adjacent or first or second alternate channels during the burst.

12.1.7.1.3 Adjacent and alternate channel power due to switching transients (data)

The adjacent and alternate channel power, due to switching transients (data) of transmitters operating in systems allocated on a channel basis and in burst repetition mode, is the greatest mean of that part of the total power resulting from the ramping-on and ramping-off of a transmitter, which falls within the specified bandwidth centered on the centre frequency of either of the adjacent or first or second alternate channels.

12.1.7.1.4 Adjacent and alternate channel power during a burst period (data)

The adjacent and alternate channel power, during a burst period (data) of transmitters operating in systems allocated on a channel basis and in burst repetition mode, is that part of the total mean power output of a transmitter during a burst period which falls within the specified bandwidth centered on the centre frequency of either of the adjacent or first or second alternate channels during the burst.

12.1.7.2 Method of measurement

This method uses RFCD or near-field coupling of the transmitter and the test antenna in the Faraday cage (if necessary) and the output of RFCD or the test antenna is measured with the same method as for the adjacent channel power (data) of transmitters equipped with suitable antenna terminals (see 7.4). The method uses the ratio measurement and the coupling of RFCD or the coupling of the transmitter and the test antenna is calculated from the RFCD radiated power (data) measured as described in 12.1.5 or from the normal direction radiated power (data) measured as described in 12.1.3.1.2, step c).

Copyright International Electrotechnical Commission
Provided by IHS under license with IEC
No reproduction or networking permitted without license from IHS Not for Resale

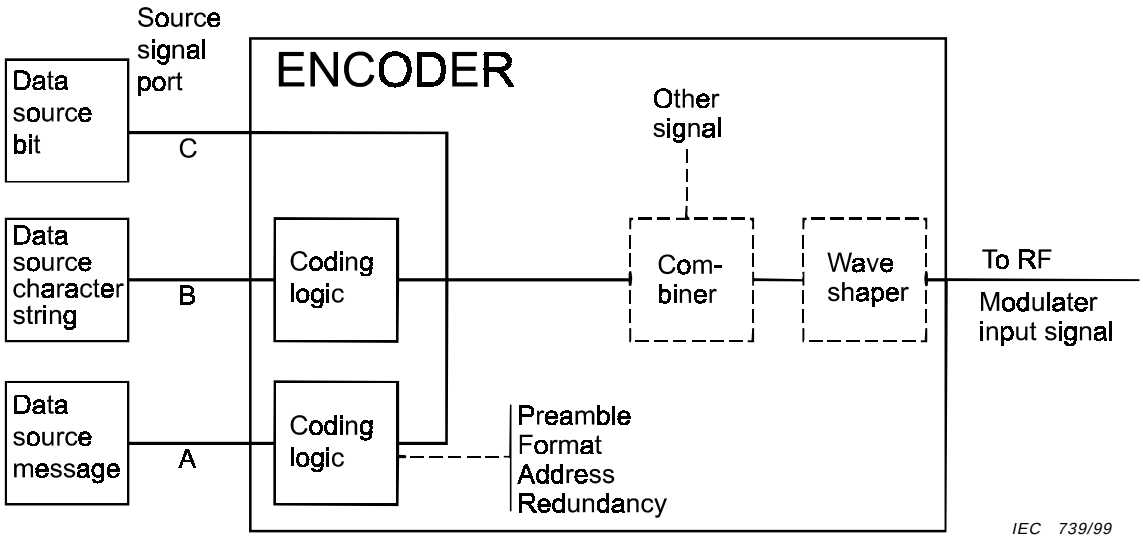

NOTE – All or part of the encoder, combiner and the data source (if required) may be inside the transmitter.

Figure 1 – Input ports and encoder of transmitter

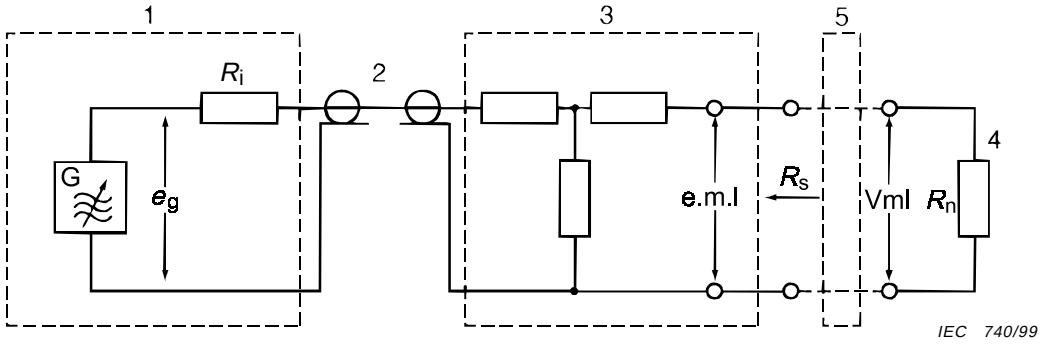

Key

1 Radio-frequency signal generator with source impedance R_i

2 Transmission line

3 Impedance matching network (pad)

4 Nominal input impedance of receiver: R_n

5 Artificial antenna (where required)

R_s Impedance of the input signal source

Figure 2 – Input-signal source test arrangement

Copyright International Electrotechnical Commission
Provided by IHS under license with IEC
No reproduction or networking permitted without license from IHS Not for Resale

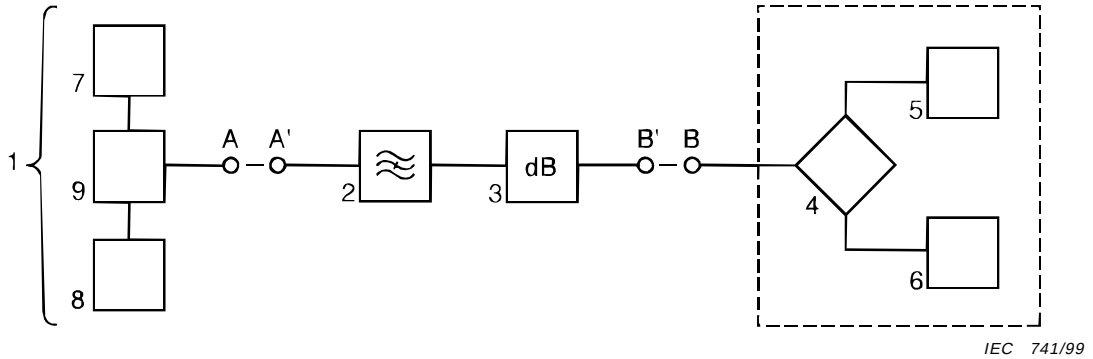

Key
1 Input-signal source
2 Band-stop filter
3 Attenuator
4 Combining unit belonging to the equipment under test
5 Transmitting part of the equipment
6 Receiving part of the equipment
7 Radio-frequency signal generator
8 Radio-frequency signal generator
9 Radio-frequency combining network

Figure 3 – Example of an arrangement for testing receiver for duplex operation

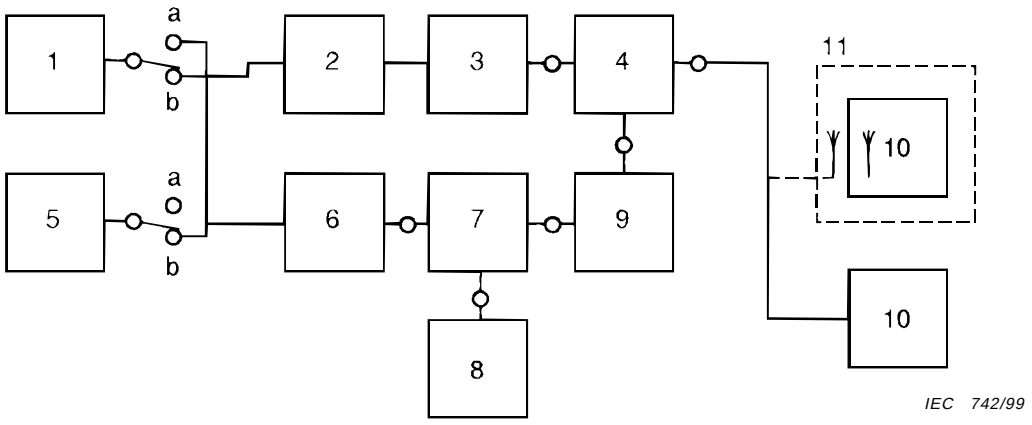

Key
1 Encoder
2 Radio-frequency signal generator
3 60 dB step attenuator (1 dB steps)
4 Matching and combining network
5 Audio-frequency signal generator
6 Radio-frequency signal generator
7 Matching and combining network (if required)
8 Radio-frequency signal generator (if required)
9 60 dB step attenuator (1 dB steps)
10 Receiver-decorder
11 Radio-frequency coupling device (if required)

NOTE – The output signals of all generators should be reduced to zero, unless otherwise indicated in the method of measurement.

Figure 4 – General test arrangement for receiver-decoder characteristics

Copyright International Electrotechnical Commission
Provided by IHS under license with IEC
No reproduction or networking permitted without license from IHS Not for Resale

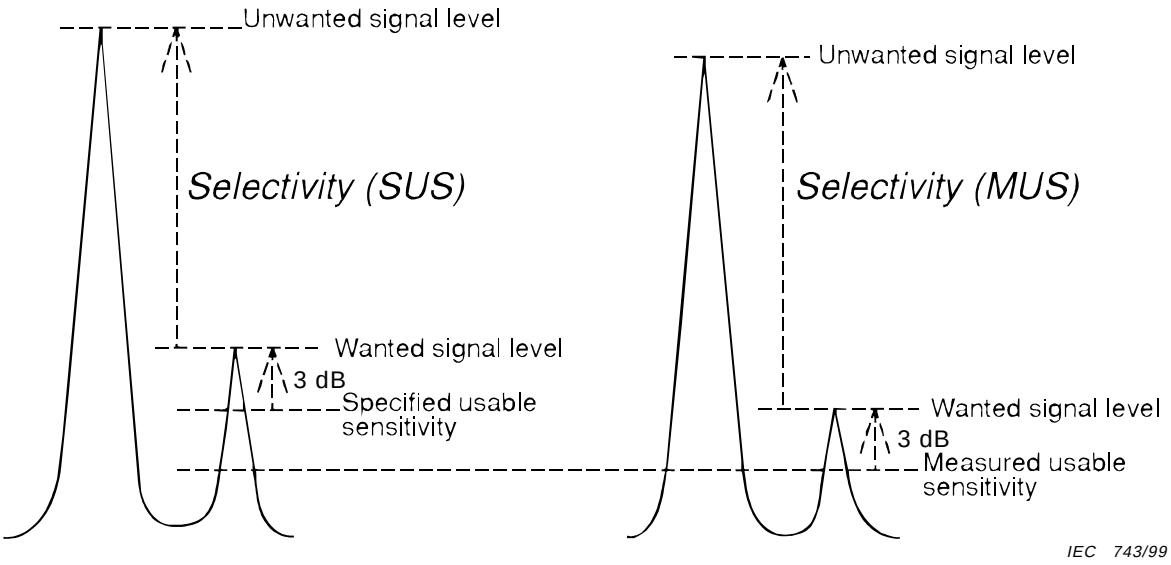

Figure 5a – Selectivity measurement using specified usable sensitivity

Figure 5b – Selectivity measurement using measured usable sensitivity

Figure 5 – Illustration of selectivity (SUS and MUS)

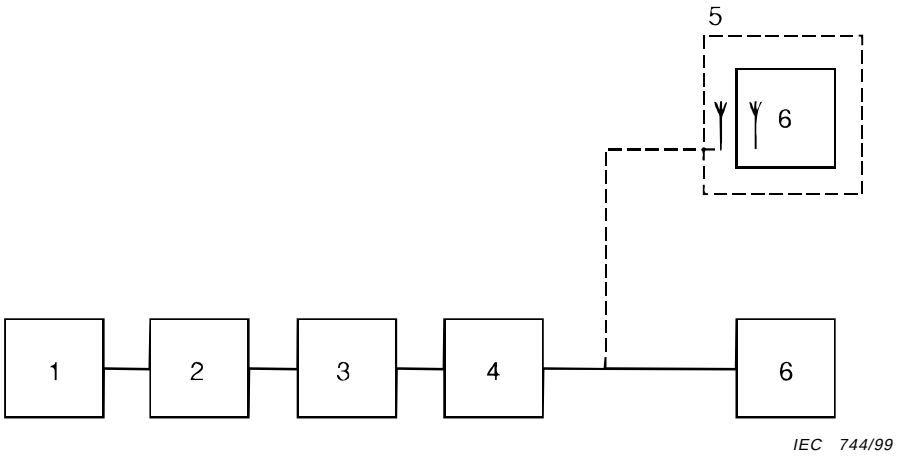

Key
1 Encoder
2 Radio-frequency signal generator
3 Rayleigh fading simulator
4 Step attenuator (1 dB steps)
5 Radio-frequency coupling device
6 Receiver-decoder

Figure 6 – Arrangement for measuring receiver-decoder sensitivity reduction under multipath propagation conditions

Copyright International Electrotechnical Commission
Provided by IHS under license with IEC
No reproduction or networking permitted without license from IHS Not for Resale

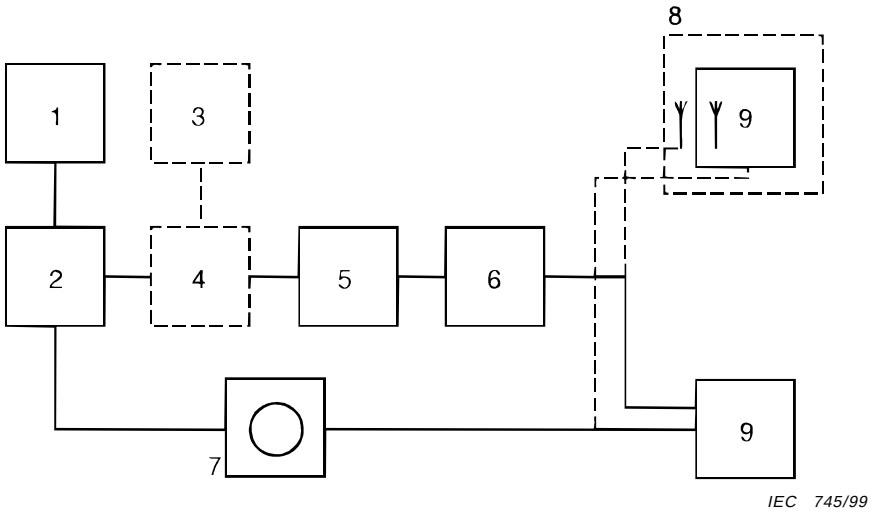

Key
1 Controller (programme)
2 Encoder
3 Audio-frequency signal generator (if required)
4 Matching and communing network (if required)
5 Radio-frequency signal generator
6 Attenuator
7 Oscilloscope
8 Radio-frequency coupling device (if required)
9 Receiver-decoder

Figure 7 – Measuring arrangement

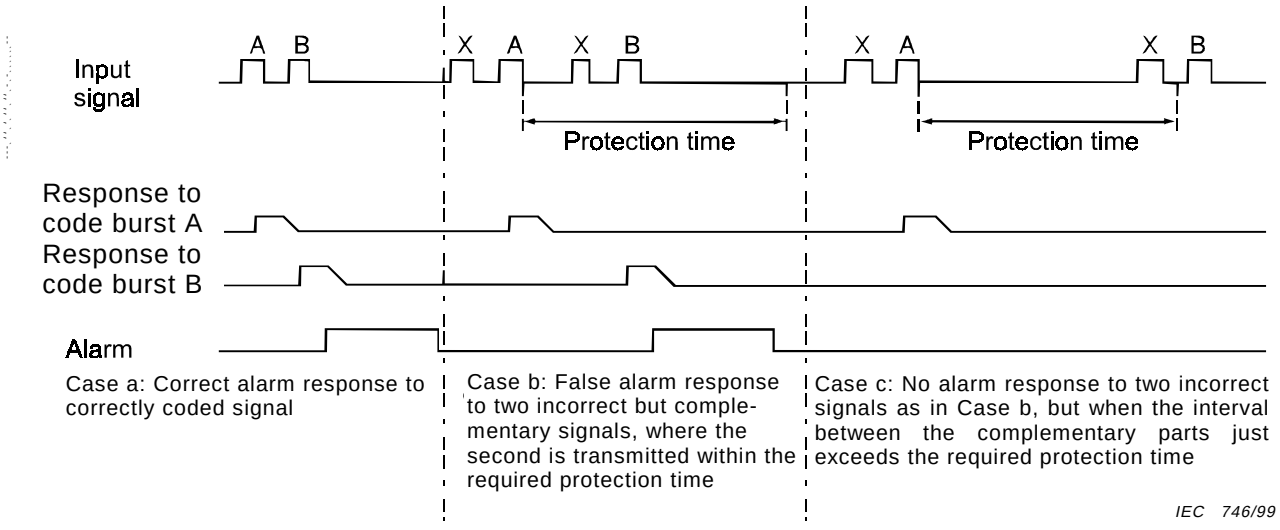

Figure 8 – Protection time

Copyright International Electrotechnical Commission
Provided by IHS under license with IEC
No reproduction or networking permitted without license from IHS Not for Resale

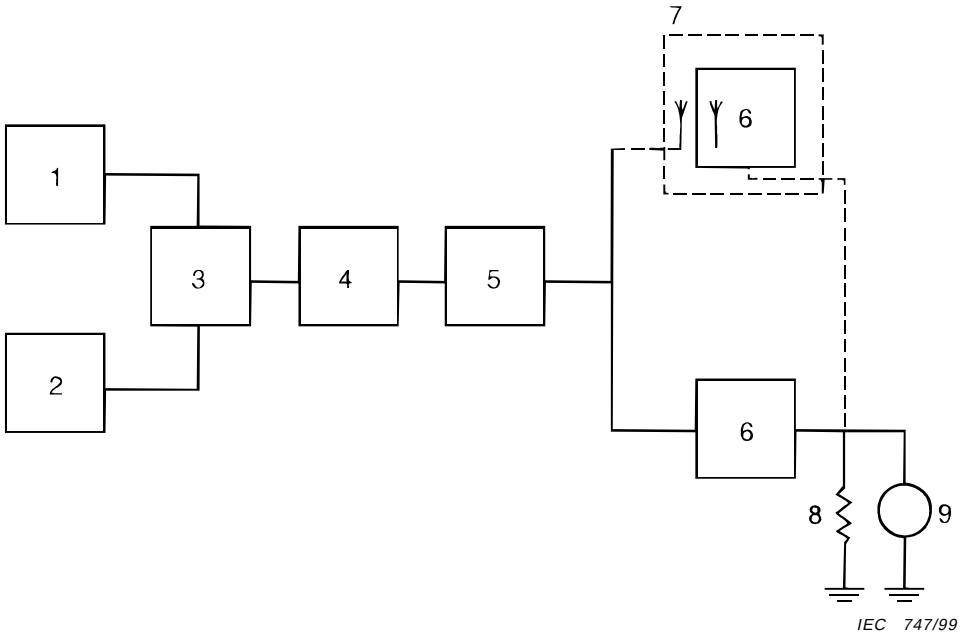

Key
1 1 000 Hz generator
2 Audio-frequency signal generator
3 Matching and combining network
4 Radio-frequency signal generator
5 Attenuator
6 Receiver-decoder
7 Radio-frequency coupling device
8 Audio-frequency test load
9 Audio-frequency voltmeter

Figure 9 – Measuring arrangement for signal-to-residual output-power ratio (selective calling)

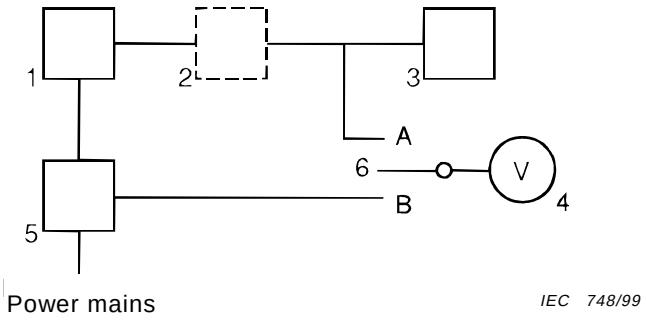

Key
1 Receiver under test
2 Artificial antenna, if required (see 5.1.2.2)
3 Test load
4 Selective measuring device
5 Mains power line impedance stabilization (isolation) network
6 Switch

Figure 10 – Measuring arrangement for antenna terminal and a.c. power terminal conducted spurious components

Copyright International Electrotechnical Commission
Provided by IHS under license with IEC
No reproduction or networking permitted without license from IHS Not for Resale

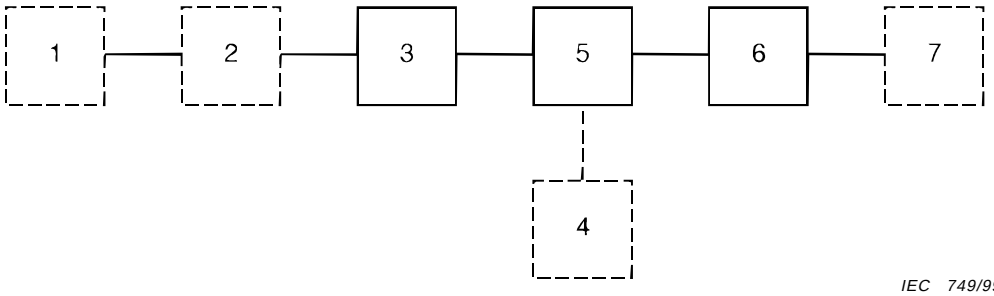

Key
1 Data source (may be incorporated in the transmitter)
2 Encoder (may be incorporated in the transmitter)
3 Transmitter under test
4 Test load
5 Coupler/attenuator
6 Frequency counter or digital storage spectrum analyser for frequency error
– Power meter or waveform recoder for average power spectrum analyser for spurious components
– Power measuring receiver or digital storage spectrum analyser for adjacent channel power
7 Waveform recoder for spurious components (if necessary)

Figure 11 – Measuring arrangement for encoder transmitters

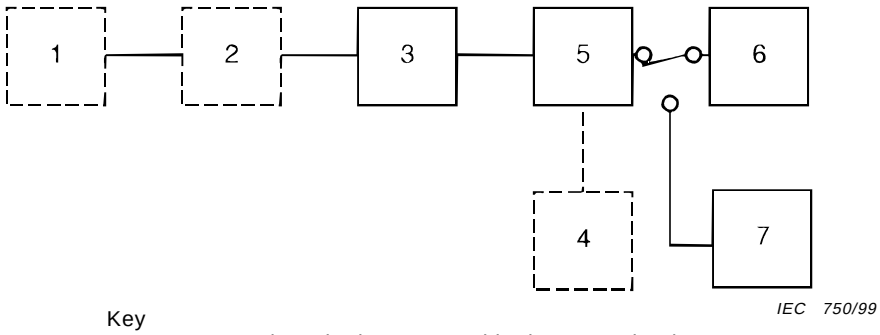

Key
1 Data source (may be incorporated in the transmitter)
2 Encoder (may be incorporated in the transmitter)
3 Transmitter under test
4 Test load
5 Coupler/attenuator
6 Power measuring receiver
7 Radio-frequency generator

Figure 12 – Measuring arrangement for adjacent channel power which needs radio-frequency generator replacement

Copyright International Electrotechnical Commission
Provided by IHS under license with IEC
No reproduction or networking permitted without license from IHS Not for Resale

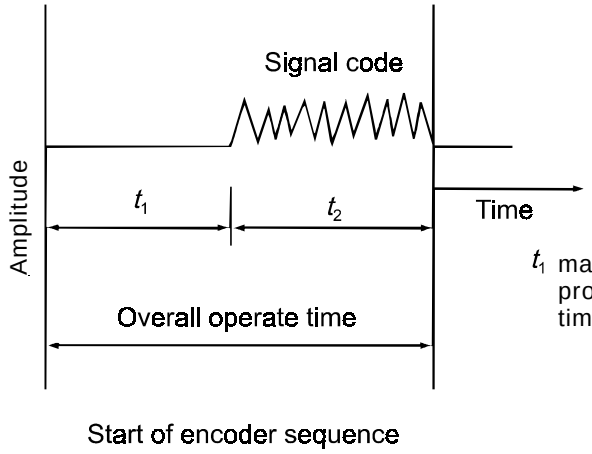

t_1 may be incorporated in the operate time to provide for such other events as transmitter attack time before the signal code is sent in interval t_2

IEC 751/99

Figure 13 – Encoder overall operate time

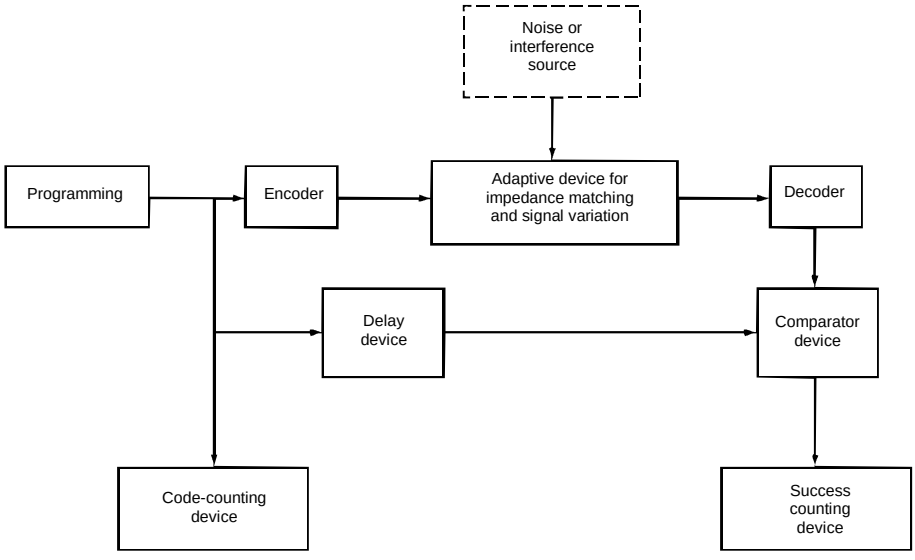

IEC 752/99

Figure 14 - Typical measurement arrangement

Copyright International Electrotechnical Commission
Provided by IHS under license with IEC
No reproduction or networking permitted without license from IHS
Not for Resale

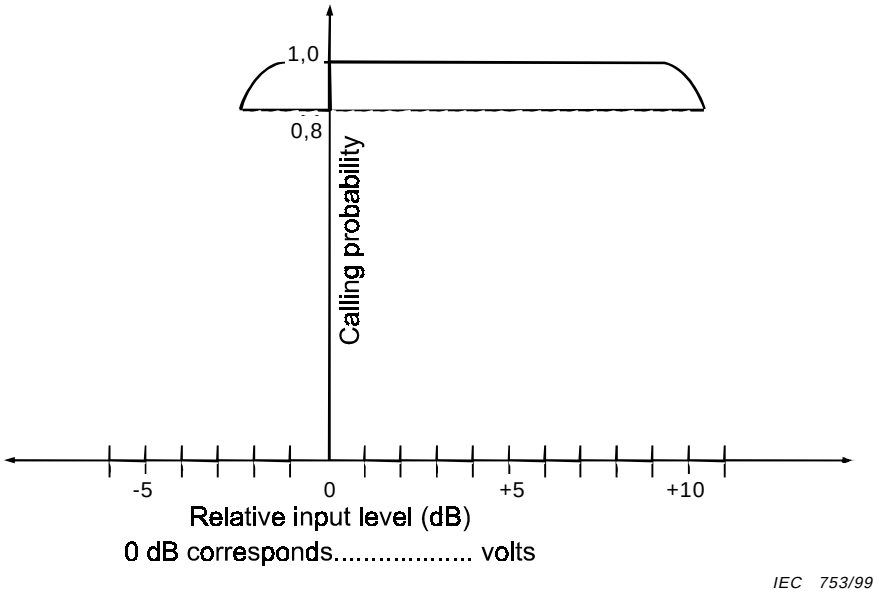

Figure 15 – Decoder operation level range

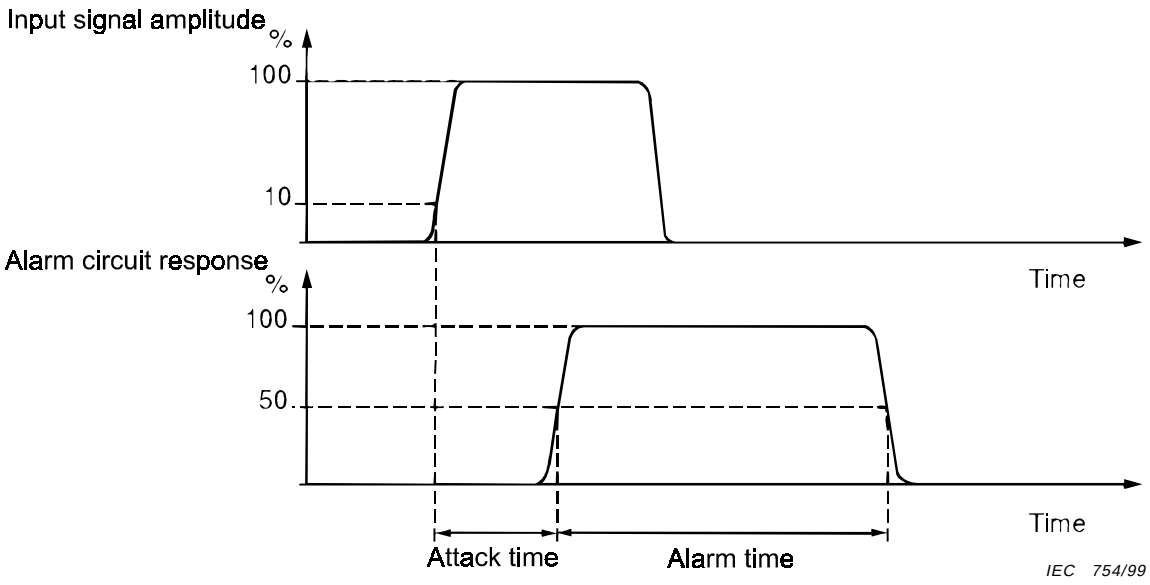

Figure 16 – Decoder attack time

Copyright International Electrotechnical Commission
Provided by IHS under license with IEC
No reproduction or networking permitted without license from IHS
Not for Resale

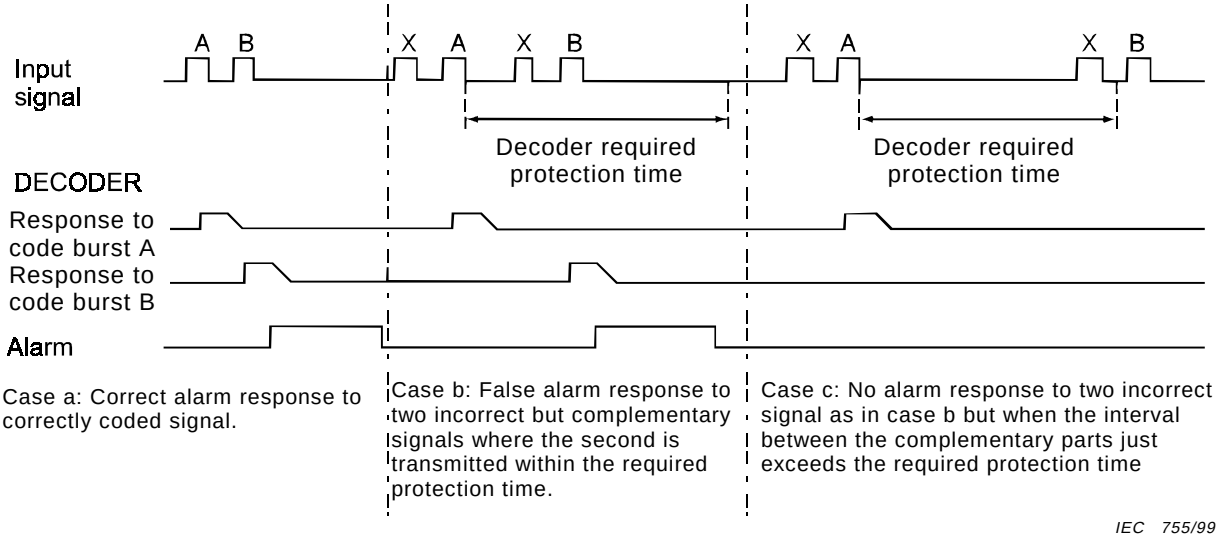

Figure 17 – Decoder required protection time

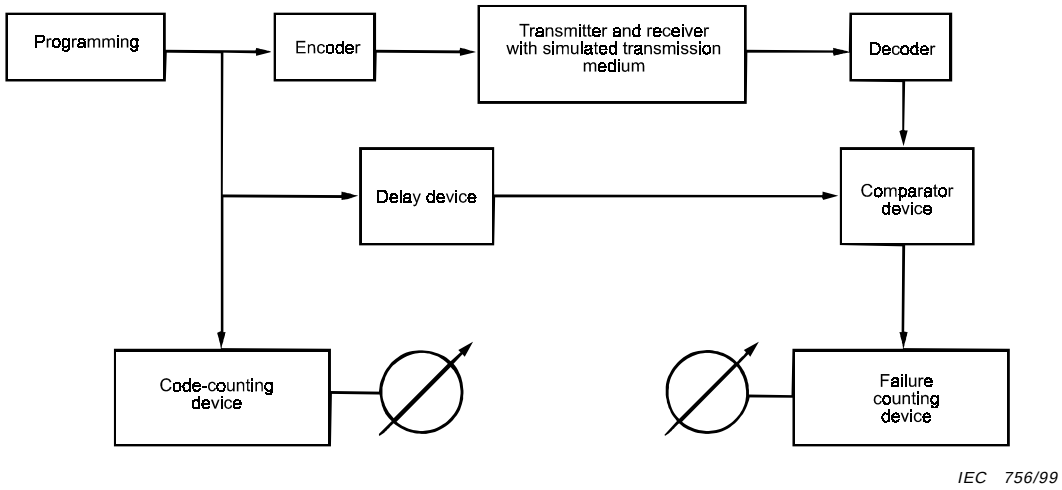

Figure 18 – Typical measuring arrangement

Copyright International Electrotechnical Commission
Provided by IHS under license with IEC
No reproduction or networking permitted without license from IHS
Not for Resale

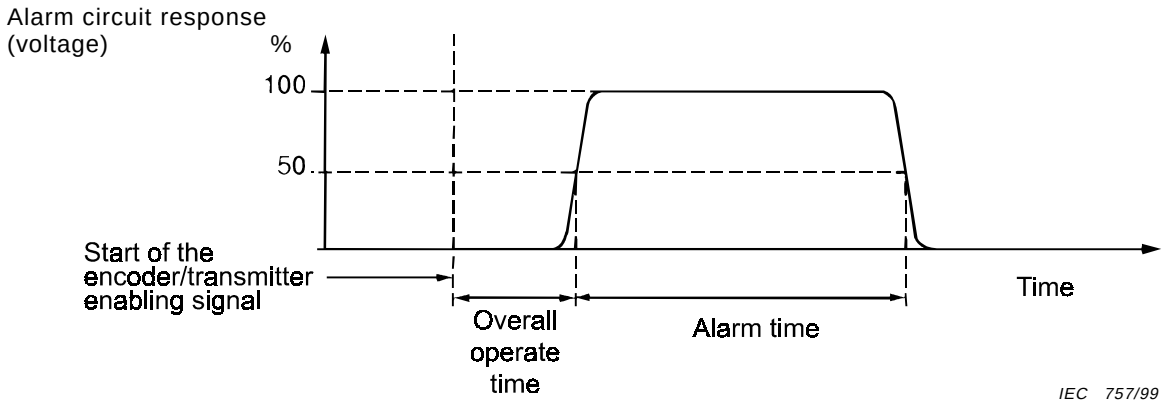

Figure 19 – System overall operate and alarm time

Copyright International Electrotechnical Commission
Provided by IHS under license with IEC
No reproduction or networking permitted without license from IHS
Not for Resale

Annex A
(normative)

Examples of combining networks

A.1 Examples of simple combining networks

Figures A.1 and A.2 illustrate examples of resistance networks suitable for combining the output signals of two or three signal generators.

A.2 Examples of network providing higher isolation between signal generators

Resistance networks, as shown in figures A.1 and A.2, may not provide sufficient isolation between signal generators to avoid intermodulation products appearing in their output. The high isolation networks described in notes 1 and 2 reduce this effect.

NOTE 1 – See IEC 60315-2 (clause 12 and figures 1, 2 and 3).

NOTE 2 – An example of a combining network using a hybrid ring is shown in figure A.3. The operation of this device is as follows.

The coaxial cable of the hybrid ring is cut to lengths of multiples of a quarter wavelength of the median frequency. The power from signal generator G_A will then be divided equally between the termination point A (provided the network is loaded at that point by a resistance R_i) and the resistor R_1, the value of which is equal to R_i. The signals from signal generator G_A at the output terminals of signal generator G_B will cancel each other since the two paths differ by half a wavelength.

The power from signal generator G_B is similarly divided and its signal at the output of the signal generator G_A cancelled.

Because the coaxial cable of the hybrid ring has a relatively low quality factor (Q), the cancellation will be effective over a wide range of frequency difference between the frequencies of the generators G_A and G_B.

The source impedance R_s of the left-hand part of the network at point A is equal to R_i (e.g. 50 Ω) if the characteristic impedance of the cable is $R_i \sqrt{2}$ (e.g. 71 Ω)

If, for certain measurements, a wanted signal in combination with two unwanted signals is needed, the third generator, G_C, supplying the wanted signal should be connected to point A by means of the combining network shown in the right-hand part of figure A.3.

The source impedance R'_s of the complete network at point B is equal to R_i (e.g. 50 Ω) if

$$R_1 = R_2 = R_3 = \frac{R_i}{3}$$

Copyright International Electrotechnical Commission
Provided by IHS under license with IEC
No reproduction or networking permitted without license from IHS Not for Resale

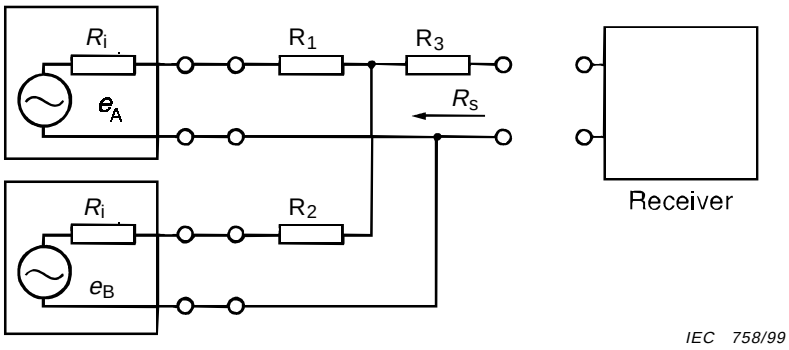

NOTE – The source impedance R_s of the network is equal to R_i if:

$$R_1 = R_2 = R_3 = \frac{R_i}{3}$$

in this case, the network attenuation is about 6 dB.

Figure A.1 – Network for combining two signals

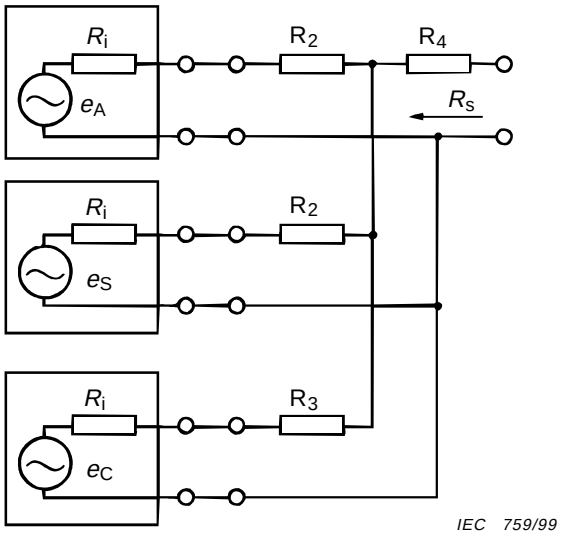

NOTE – The source impedance R_s of the network is equal to R_i if:

$$R_1 = R_2 = R_3 = R_4 = \frac{R_i}{2}$$

in this case, the network attenuation is about 10 dB.

Figure A.2 – Network for combining three signals

Copyright International Electrotechnical Commission
Provided by IHS under license with IEC
No reproduction or networking permitted without license from IHS Not for Resale

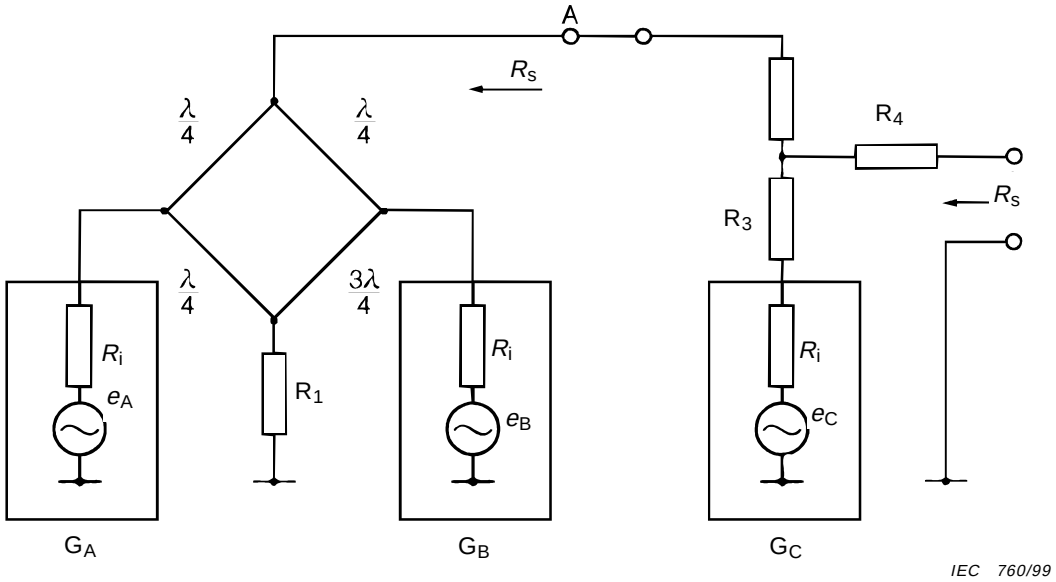

G_A and G_g = signal generators

G_C = additional signal generator, when required

Figure A.3 – Example of combining network using a hybrid ring

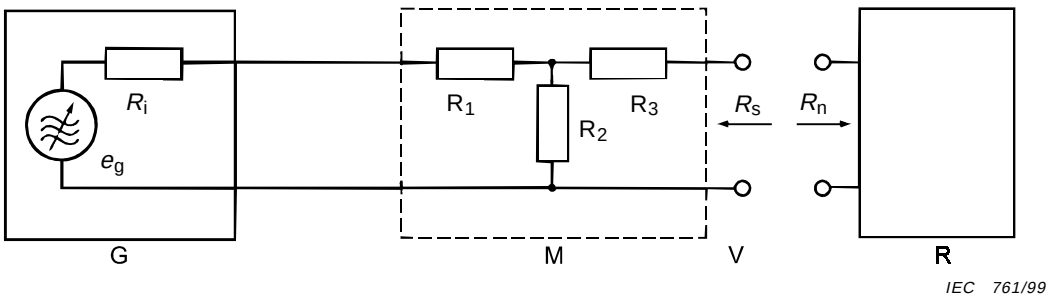

G = radio-frequency signal generator

M = matching network

R = receiver

$$R_2 = \frac{2\sqrt{N \times R_i \times R_n}}{N-1}$$

$$R_1 = R_i\left(\frac{N+1}{N-1}\right) - R_2$$

$$R_3 = R_n\left(\frac{N+1}{N-1}\right) - R_2$$

where N is the required power loss ratio

Figure A.4 – Example of a matching network

Copyright International Electrotechnical Commission
Provided by IHS under license with IEC
No reproduction or networking permitted without license from IHS Not for Resale

Annex B
(normative)

Recommended characteristics of measuring equipment and methods of test

B.1 Method for testing the intermodulation characteristics of the signal generators

The intermodulation in the signal generators may be tested using the following procedure.

Insert a variable attenuator between the combining network and the receiver under test. Increase the attenuation in steps of 1 dB and increase the output voltages of the generators by the same amounts, thus maintaining the original signal level at the input to the receiver.

Since the intermodulation products in the output should remain constant, any increase is caused by intermodulation in the signal generators.

B.2 Method of testing signal generator noise

The measurement of certain characteristics, for example, adjacent channel selectivity, can be erroneous when a signal generator having a high spectral noise constant is used.

At frequencies below 200 MHz, a crystal filter having at least 20 dB rejection at the adjacent channel can be connected at the output of the generator under test as a means of assessing whether a result is influenced by signal generator noise.

B.3 Power measuring receiver

See clause A.7 of annex A of IEC 60489-2.

B.4 Spectrum analyser

See clause A.8 of annex A of IEC 60489-2.

B.5 Power measuring receiver with a digital band-pass filter

This power measuring receiver uses digital signal processor (DSP) technology for realizing the channel band-pass filter. An example of the block diagram of the power measuring receiver is shown in figure B.1. The characteristics of the digital band-pass filter are shown in table B.1.

Table B.1 – Characteristics of digital band-pass filter

	Phase characteristics	**Amplitude tolerance from specified values of a system** dB			
Point		3	6	40	70
Type 1	Designed to be linear	±0,2	±0,5	+3/0	+10/0
NOTE 1 – The listed points should be specified for the receiver filter normal attenuation values in a system. The 0 dB point is the minimum attenuation point. NOTE 2 – If the above points are not specified in a system receiver filter, the interpolated values may be used.					

Copyright International Electrotechnical Commission
Provided by IHS under license with IEC
No reproduction or networking permitted without license from IHS Not for Resale

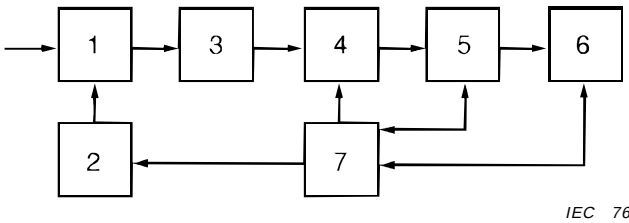

IEC 762/99

Key
1 Mixer
2 Local oscillator
3 A/D converter
4 Digital band-pass filter
5 Memory
6 Display
7 CPU

Figure B.1 – Example of power measuring receiver with a digital band-pass filter

--`,,`,,`-`-`,,`,,`,`,,`---

Copyright International Electrotechnical Commission
Provided by IHS under license with IEC
No reproduction or networking permitted without license from IHS Not for Resale

Annex C
(normative)

Rayleigh fading simulator

C.1 General characteristics of a Rayleigh fading simulator

A Rayleigh fading simulator is a test apparatus which will modulate a radio-frequency signal in a manner which simulates the fast variation of signals encountered in the mobile services. The following three characteristics of a fading simulator must be known:

a) the phase distribution of the fading-modulated signal;

b) the level distribution of the envelope of the modulated signal;

c) the mean rate at which the envelope of the modulated signal crosses a given level (in one direction).

Measurements using Rayleigh fading simulators are meaningful only if the results which are obtained depend only slightly on the simulator used. To ensure this, it is necessary that the Rayleigh simulator has the following characteristics.

1) The phase of the modulated radio-frequency signal shall have a density distribution within ±20 % of 0,5 π with reference to the phase of the radio-frequency input signal over the range of –π to +π radians.

2) The cumulative distribution of the envelope of the modulated radio-frequency signal shall be within ±2 dB of a cumulative Rayleigh distribution over a range of +8 dB to –32 dB referred to the r.m.s. value of the modulated radio-frequency signal. According to the Rayleigh law, *P(Γ)* is the probability that the envelope of the modulated radio-frequency is equal to or less than the value of *x* as calculated below:

$$P\left(\Gamma\right) = 1 - \mathrm{e}^{-\Gamma^2} \qquad \text{(C.1)}$$

where

$$\Gamma = \frac{x}{x\,(\mathrm{r.m.s})} = \frac{\text{instantaneous envelope voltage}}{\text{r.m.s. voltage of the envelope}} \qquad \text{(C.2)}$$

3) The mean level crossing rate (in one direction) shall be within ±20 % of:

$$\overline{N}_\theta = \sqrt{2\pi}\ f_\mathrm{m} \times \theta \times \mathrm{e}^{-\theta^2}, \text{ in } \mathrm{s}^{-1} \qquad \text{(C.3)}$$

for θ varying from +5 dB to –25 dB with $f_\mathrm{m} = v/\lambda$ (C.4)

where

v is the vehicle velocity, in metres per second

λ is wavelength of signal, in metres

$$\Gamma = \frac{x}{y\,(\mathrm{r.m.s})} = \frac{\text{voltage level for envelope crossing rate determination}}{\text{r.m.s. voltage of the envelope}} \qquad \text{(C.5)}$$

The r.m.s. will have large short-term variations. Therefore, to reduce the uncertainty, its value should be determined over a sufficiently long period.

NOTE – The median value of the envelope is 1,6 dB less than the r.m.s. value.

For an example of a Rayleigh fading simulator, see figure C.1.

Copyright International Electrotechnical Commission
Provided by IHS under license with IEC
No reproduction or networking permitted without license from IHS Not for Resale

C.2 Performance verification of a Rayleigh fading simulator

C.2.1 Principle of verification

This verification applies to each of the parameters previously defined under items a), b) and c) of clause C.1. It consists of

1) comparing the values obtained at the simulator output with the theoretical values corresponding to phase distribution, envelope distribution and mean level crossing rate;
2) ensuring that the corresponding deviations do not exceed the permitted tolerance.

C.2.2 Equipment used

A fast logarithmic radio-frequency selective measuring device, a phase meter, and means for analysing a distribution are required to carry out the performance verification. An example of equipment for doing this is illustrated in figure C.2.

The requirements for the equipment are:

– the baseband output of the logarithmic radio-frequency measuring device shall have a flat response from 0 Hz to 3 000 Hz and an output range of 40 dB. The output of the radio-frequency selective measuring device shall be compatible with the input range of the A/D converter;
– the A/D converter shall have 8-bit encoding and have a conversion time no greater than 80 ms;
– the memory should be capable of storing at least 32 000 8-bit words (bytes) at the rate generated by the A/D converter. Although this memory size will not hold all of the information generated in one measurement, statistical significance will not be lost if the samples are taken in several segments, provided that the sum of the samples in the segments is equal to the required number of samples;
– the baseband output of the phase meter shall have a flat response from 0 Hz to 3 000 Hz and be able to make accurate phase measurement over an amplitude range of at least 40 dB;
– the processor should be capable of storing the output of the A/D converter in the memory and then taking the information from the memory and processing it.

NOTE 1 – If the output of the A/D converter is processed in real time to provide an address to a memory position that can be made to correspond to a level or phase, then the memory position content can be increased by 1 each time that it is addressed. This method requires only 256 16-bit words of memory for the amplitude or phase measurement and reduces the time needed to process the data.

NOTE 2 – For the crossing rate measurement, the same process can be used. In this case, however, seven analogue comparators, each connecting to a 16-bit word of memory, would be required.

C.2.3 Method of measurement

C.2.3.1 Method of measurement for phase distribution

NOTE – To achieve statistical significance, this measurement requires that 64 000 phase samples be used to verify the phase performance of the Rayleigh fading simulator.

a) Connect the equipment as illustrated in figure C.2.
b) Adjust the frequency of the clock of the A/D converter to 40 times f_m, in hertz.
c) Adjust the frequency of the radio-frequency signal generator to the frequency band of interest and note the frequency.

   NOTE – The Rayleigh fading simulator should be verified at a radio-frequency which is within 20 % of the frequency of the receiver being measured.

d) Adjust the velocity control of the Rayleigh fading simulator (or bandwidth of the noise lowpass filters) according to equation (4) for a specified velocity of the application of interest and note the velocity.

Copyright International Electrotechnical Commission
Provided by IHS under license with IEC
No reproduction or networking permitted without license from IHS Not for Resale

The specified velocities are:

– 10 km/h, 20 km/h, 50 km/h and 100 km/h for mobile application;

– 1 km/h, 2 km/h, 5 km/h and 10 km/h for portable application.

If the velocity control is adjustable in discrete steps, it shall be set to within 20 % of the specified velocity.

e) Adjust the radio-frequency input level to the Rayleigh fading simulator to the value specified by the manufacturer.

f) Clear the memory, and reset the sample counter (or clock).

g) Run the measurement for 64 000 samples, and store the values of the samples in the memory.

h) Process the information in the memory to determine the number of samples that occurred in each 10 degree phase increment, and record the results.

i) Repeat steps d) to h) for the other specified velocities.

C.2.3.2 Presentation of results

a) Record the radio-frequency noted in step c) and the velocity in step d) of C.2.3.1.

b) Make a table of the phase angles and the number of samples in each of the 36 10-degree increments for each velocity recorded in step d) or C.2.3.1.

c) If the number of samples in each class lies between 1 422 and 2 134, record that the simulator complies with this IEC standard for the phase distribution at the specified velocity and radio-frequency.

C.2.3.3 Method of measurement for crossing rate and envelope distribution

NOTE – To achieve statistical significance, the crossing rate measurement requires that 128 000 samples of the envelope be used to verify the crossing rate performance of the Rayleigh fading simulator. The same samples may be used to measure the envelope distribution of the Rayleigh fading simulator.

a) Connect the equipment as illustrated in figure C.2.

b) Adjust the conversion rate of the A/D converter to 128 times f_m, in hertz.

c) Adjust the frequency of the radio-frequency signal generator to the frequency band of interest, and note the frequency.

NOTE – The Rayleigh fading simulator should be verified at a radio-frequency which is within 20 % of the frequency of the receiver being measured.

d) Adjust the velocity control of the Rayleigh fading simulator (or bandwidth of the noise lowpass filters) according to equation (C.4) for a specified velocity of the application of interest and note the velocity.

The specified velocities are

– 10 km/h, 20 km/h, 50 km/h and 100 km/h for mobile application;

– 1 km/h, 2 km/h, 5 km/h and 10 km/h for portable application.

If the velocity control is adjustable in discrete steps it shall be set to within ±20 % of the specified velocity.

e) Adjust the radio-frequency input level to the Rayleigh fading simulator to the value specified by the manufacturer.

f) Clear the memory, and reset the sample counter (or clock).

g) Run the measurement for 128 000 samples, and store the value of the samples in the memory.

h) Process the information in the memory to determine the cumulative distribution of the samples. It is recommended that each class have a width of 1 dB.

Copyright International Electrotechnical Commission
Provided by IHS under license with IEC
No reproduction or networking permitted without license from IHS Not for Resale

l) Process the information in the memory to determine the number of level crossings (one direction) of the envelope for each level (–25, –20, –15, –10, –5, 0 and +5 dB) referred to the r.m.s. value of the signal envelope.

j) Repeat steps d) to i) for the other specified velocities.

C.2.3.4 Presentation of results for envelope distribution

a) Record the frequency noted in step c) and the velocity noted in step d) of C.2.3.3.

b) Plot the cumulative distribution determined in step h) of C.2.3.3 on Rayleigh graph paper, or make a table of Γ in decibels and the cumulative number of samples.

c) Record the verification that the simulator complies with this IEC standard for the cumulative envelope distribution at the specified velocity and radio-frequency if the value lies within 2 dB of the corresponding value defined by equation (C.1) or if the cumulative number of samples is within the range shown in table C.1.

C.2.3.5 Presentation of results for level crossing rate

a) Make a table of the envelope levels, and the number of crossings for each level and for each velocity observed in step d) of C.2.3.3.

b) Record the verification that the simulator complies with IEC standards for level crossing rate if the number of crossings for each level is within the range shown in table C.2, for each specified velocity and radio-frequency.

Copyright International Electrotechnical Commission
Provided by IHS under license with IEC
No reproduction or networking permitted without license from IHS Not for Resale

Table C.1 – Limits for the cumulative number of samples at each value of decibels

Level dB	Lower limit	Expected value	Upper limit
–32	51	81	128
–31	64	102	161
–30	81	128	203
–29	102	161	255
–28	128	203	321
–27	161	255	404
–26	203	321	509
–25	255	404	640
–24	321	509	805
–23	404	640	1 013
–22	509	805	1 274
–21	640	1 013	1 601
–20	805	1 274	2 013
–19	1 013	1 601	2 529
–18	1 274	2 013	3 175
–17	1 601	2 529	3 984
–16	2 013	3 175	4 996
–15	2 529	3 984	6 257
–14	3 175	4 996	7 827
–13	3 984	6 257	9 774
–12	4 996	7 827	12 181
–11	6 257	9 774	15 141
–10	7 827	12 181	18 761
–9	9 774	15 141	23 153
–8	12 181	18 761	28 432
–7	15 141	23 153	34 702
–6	18 761	28 432	42 036
–5	23 153	34 702	50 456
–4	28 432	42 036	59 893
–3	34 702	50 456	70 159
–2	42 036	59 893	80 911
–1	50 456	70 159	91 653
0	59 893	80 911	101 764
1	70 159	91 653	110 595
2	80 911	101 764	117 617
3	91 653	110 595	122 582
4	101 764	117 617	125 611
5	110 595	122 582	127 148
6	117 617	125 611	127 767
7	122 582	127 148	127 955
8	125 611	127 767	127 994

Table C.2 – Limits for the number of level crossings in the measurements

Level dB	Expected rate f_m	Lower limit	Expected value	Upper limit
–25	0,14	112	141	169
–20	0,25	199	248	298
–15	0,43	345	432	518
–10	0,72	574	717	861
–5	1,02	822	1 027	1 233
0	0,92	738	922	1 107
+5	0,19	151	189	226

Copyright International Electrotechnical Commission
Provided by IHS under license with IEC
No reproduction or networking permitted without license from IHS Not for Resale

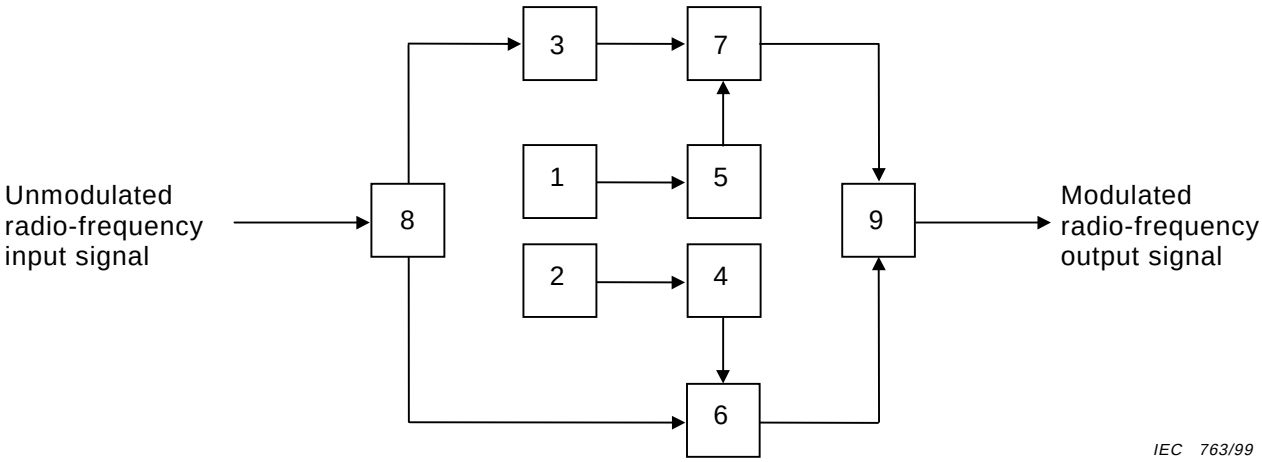

Key
1, 2 Gaussian noise generator
3 90° phase shifter
4, 5 Low-pass filter
6, 7 Balanced mixers
8 Power divider
9 Hybrid

Figure C.1 – Example of a Rayleigh fading simulator

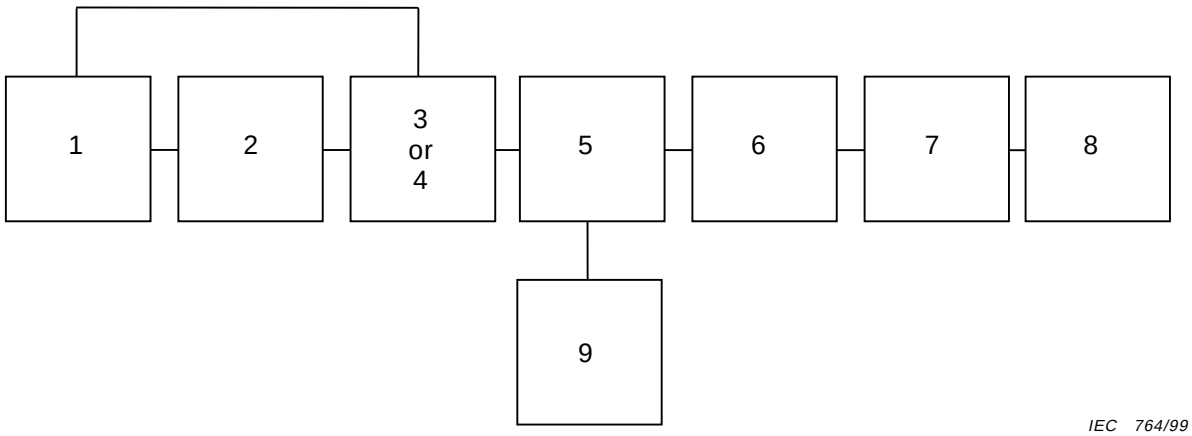

Key
1 Radio-frequency signal generator
2 Rayleigh fading simulator
3 Phase meter
4 Logarithmic, radio-frequency, selective measuring device
5 A/D converter
6 Memory (if necessary)
7 Processor
8 Output device
9 Variable clock

NOTE – If the simulator (2) does not have a zero velocity setting, it should be bypassed and the output of the generator (1) should be adjusted to allow for its attenuation.

Figure C.2 – Example of measuring arrangement for evaluating a Rayleigh fading simulator

Copyright International Electrotechnical Commission
Provided by IHS under license with IEC
No reproduction or networking permitted without license from IHS Not for Resale

Annex D
(informative)

Intermodulation response

D.1 Intermodulation response

Intermodulation responses corresponding to the intermediate frequency are not significant in this class of equipment.

Unwanted signal frequencies which may produce an intermodulation response are related to the wanted signal frequency as follows.

D.1.1 Second-order relationship

$$f_w = f_r \pm f_n$$

NOTE – Commonly used frequency relationships include:

$f_n = f_w + \Delta f$ $\qquad$ $f_n = f_w - \Delta f$

or

$f_r = 2f_w + \Delta f$ $\qquad$ $f_r = 2f_w - \Delta f$

D.1.2 Third-order relationship

$$f_w = 2f_n \pm f_r$$

NOTE – Commonly used frequency relationships include:

$f_n = f_w + \Delta f$ $\qquad$ $f_n = f_w - \Delta f$

or

$f_r = f_w + 2\Delta f$ $\qquad$ $f_r = f_w - 2\Delta f$

D.1.3 Fifth-order relationship

$$f_w = 3f_n \pm 2f_r$$

NOTE – Commonly used signal frequency relationships include:

$f_n = f_w + \Delta f$ $\qquad$ $f_n = f_w - \Delta f$

or

$f_r = f_w + 1{,}5\Delta f$ $\qquad$ $f_r = f_w - 1{,}5\Delta f$

where

f_w is the frequency of the wanted signal

f_n is the frequency of the nearer unwanted signal

f_r is the frequency of the more remote unwanted signal

Δf is the frequency difference between the wanted signal and the nearer unwanted signal

Other intermodulation orders exist. However, selection of a reasonable number of frequencies f_n and f_r is generally sufficient to describe the performance of the equipment considered in this standard with respect to intermodulation.

Annex E

Copyright International Electrotechnical Commission
Provided by IHS under license with IEC
No reproduction or networking permitted without license from IHS Not for Resale

Annex E
(normative)

Accuracy and dispersion of methods of measurement and compliance tests for sensitivity (data and selective calling) and degradation measurements (data and selective calling)

E.1 Introduction

This discussion will show, by analysis of examples, the underlying basis for determining the accuracy and dispersion for the methods of measurement and compliance tests used in this standard. The examples of error ratio curves selected are typical for receiver-decoders that will be measured using the methods in this standard.

The methods of measurement and compliance tests have been designed to provide the desired degree of accuracy and dispersion for equipment that have error ratio versus input-signal level curves that have significantly less slope than the examples used in this discussion.

The analysis given in this annex will allow one to use other examples of error ratio curves to evaluate the methods of measurement or compliance tests used in this standard.

In this standard, there are measurements of receiver radio-frequency parameters for several types of signals each having a standardized reference error ratio. The radio-frequency parameters fall into three classes: sensitivity, sensitivity reduction under multipath propagation conditions and degradation. In this annex sensitivity reduction under multipath propagation conditions will be referred to as fading.

Sensitivity is the level of radio-frequency input signal required to produce the reference error ratio.

In this standard, the fading measurements are made using a Rayleigh fading simulator. However, most of the measurements are made in the static condition and in this annex, unless otherwise stated, the static condition is implied.

The fading margin is the ratio of radio-frequency input-signal level (static) required to produce the reference error ratio to the radio-frequency input-signal level (faded) required to produce the reference error ratio.

In the degradation measurements, the requirement is to find the level of the unwanted input signal that causes a wanted input signal which is 3 dB in excess of the reference sensitivity that will produce the reference error ratio.

Different methods of measurements are used for the different signals. The two methods of measurement used in this standard are named the up/down method and the straddle method. A summary of the types of parameters, signals, the reference error ratio and the method of measurement used are shown in table E.1.

NOTE – In the title of some of the figures the word “bit” has been used for bit stream and “character” has been used for character string. The word “fading” has been used for sensitivity (fading).

Copyright International Electrotechnical Commission
Provided by IHS under license with IEC
No reproduction or networking permitted without license from IHS Not for Resale

Table E.1 – Reference error ratios

Receiver parameter	Type of signal	Reference error ratio	Method of measurement used
Sensitivity	Selective calling	0,20 [1)]	Up/down [2)]
Sensitivity	Data (bit stream)	0,01	Straddle
Sensitivity	Data (character string)	0,01	Straddle
Sensitivity	Data (message)	0,20	Up/down [2)]
Sensitivity (fading)	Selective calling	0,20 [1)]	Up/down [2)]
Sensitivity (fading)	Data (bit stream)	0,01	Straddle
Sensitivity (fading)	Data (character string)	0,01	Straddle
Sensitivity (fading)	Data (message)	0,20	Up/down [2)]
Degradation	Selective calling	0,20 [1)]	Up/down [2)]
Degradation	Data (bit stream)	0,01	Straddle
Degradation	Data (character string)	0,01	Straddle
Degradation	Data (message)	0,20	Up/down [2)]

[1)] Selective calling uses the reference of 80 % calling probability.

For this discussion, the selective calling reference error ratio is 1 – 0,80 or 0,20.

[2)] The method of measurement for messages used in this standard is based on the up/down method. This method seeks a signal level of wanted or unwanted signals so that the message sequence will have an error ratio of 50 %.

The relationship between the number of messages in a sequence and the error ratio for the sequence is:

$$(1 - P_m)^N = 0,5$$

where

P_m is the message error rate of the message sequence;

N is the number of messages in each sequence.

For example, for a P_m of 0,2, N is very nearly 3, which is used in the message measurements. The up/down method of measurement assumes that the errors occur independently from one message to the next, which is indeed the case. However, this method is not used for bit stream or character string measurements, because for these, the assumption does not always hold.

It should be noted that measurements of a radio-frequency parameter, for example reference sensitivity on the same receiver-decoder for bit stream, character string or message, will probably not give the same result.

E.2 Measurement and compliance test

In this standard there are two types of methods of measurement. Both types are included because they serve different purposes.

E.2.1 Measurement

The first type of measurement measures the parameter which is the input-signal level or the unwanted signal level that produces the reference error ratio. Since this method provides an estimate of the parameter, it is a two-sided test and usually requires a longer measurement than the compliance test. This method of measurement in this discussion is referred to as a method of measurement.

Copyright International Electrotechnical Commission
Provided by IHS under license with IEC
No reproduction or networking permitted without license from IHS Not for Resale

E.2.2 Compliance test

The second type of measurement is the compliance test which only determines if the error ratio is greater or smaller than the reference error ratio for a specified level of input signal and unwanted signal(s). This is a one-sided test and, in many cases, can be performed in less time. An important characteristic of a compliance test method is its risk curve (see E.8.4). The concept of the risk curve has a correspondence to the concept of dispersion for methods of measurement.

E.3 Dispersion

Dispersion of a measurement is characterized by a probability distribution of the results of the measurement that can be expected when the measurement is performed many times on the same equipment under the same conditions.

E.3.1 Definition of dispersion

Dispersion varies with test equipment, with operator and, in the measurement of selective call and data receivers, with the statistical process used in the measurement. In this annex, only the latter is discussed for measuring sensitivity, fading and degradation.

The measurements will produce values (estimates) which have a probability distribution that has a bell shape for units of input-signal level in decibels. Since the probability distribution can be different for each receiver-decoder measured, the dispersion is defined as the range of input-signal levels from the level where the cumulative probability distribution equals 0,05 probability to where it equals 0,95 probability (e.g. –1,2 to 0,9 dB).

For compliance tests, dispersion is defined as the difference between the receiver-decoder parameter that has a 0,95 probability of passing and one that has a 0,05 probability of failing (see E.8.4).

E.3.2 Magnitude of dispersion

The design goals for the methods of measurement and compliance test methods in this standard are to have a dispersion and risk of:

±1 dB or less for sensitivity,

±2 dB or less for degradation (e.g. selectivity or intermodulation),

±2 dB or less for fading.

This was done by assuming the lowest slope of the error ratio curves generally experienced in current receiver-decoders and by selecting the number of elements (tones, bits, characters or messages) used in the method of measurement or compliance test method.

While the examples used in this discussion are typical, they have considerable margin to the above goals in their dispersion and risk. The methods of measurement and compliance test methods have been designed with this in mind, as there may be receiver-decoders measured that have error ratio curves that are significantly different from those in the examples.

The number of elements selected for the methods of measurement or compliance test methods have been reduced to the minimum, consistent with the above goals.

While there are many useful methods available for making these measurements and compliance tests, the methods chosen to be standardized for this standard will produce the desired dispersion and risk.

Copyright International Electrotechnical Commission
Provided by IHS under license with IEC
No reproduction or networking permitted without license from IHS Not for Resale

E.4 Accuracy

Accuracy for methods of measurement, in this annex, is characterized by the difference between the average estimate obtained from the measurement and the theoretical value that one would expect to obtain. For example, if the theoretical value for a method of measurement is 0 dB and the average of the estimates obtained from the method of measurement is –0,08 dB, the accuracy of the method of measurement is –0,08 dB. Accuracy should not be confused with the range of dispersion. A method of measurement could have a small dispersion and a high inaccuracy or the opposite. Ideally, the method of measurement should have low values for both dispersion and accuracy.

Accuracy for compliance test methods is the difference between the relative input-signal level that produces 0,5 probability of passing and the theoretical value.

E.5 Shapes of error ratio curves

Important factors that determine the dispersion of a method of measurement or the risk of compliance test methods are the reference error ratio, the shape of the error ratio curve of the equipment under test and the number of elements used in the method of measurement or compliance test method.

The shape of the error ratio curve for a receiver-decoder can be determined by the lengthy process of measuring the error ratio for different input-signal levels and plotting the result. In this standard, it is assumed that the error ratio curve is not known to the operator except for some general bounds and is not required by the method of measurement or the compliance test method. In this annex, however, the examples used provide a model that allows the error ratio curve to be determined for the examples which are used in this discussion.

All of the error ratio curves for the examples used in this annex have been normalized so that 0 dB is at the reference error ratio. The analysis only makes use of the shape of the error ratio curves. Receiver-decoders that require a greater signal-to-noise ratio will have their error ratio curves shifted to the right and if the required signal-to-noise ratio is less, the error ratio curves will be shifted to the left.

E.5.1 Shapes of bit stream error ratio curves

E.5.1.1 For sensitivity measurements

For data (bit stream), common examples of error ratio functions (see page 406 of reference [1])* used for receiver-decoders (static) are:

$$Err_{\text{bit}} = 0{,}5\left[1 - erf\left(\sqrt{C\,/\,A}\right)\right] \qquad \text{(E.1)}$$

where

Err_{bit} is the bit error ratio;

erf is the error function;

C is the ratio of the carrier-to-noise power;

A = 1 for ideal coherent PSK (antipodal signalling);

A = 2 for coherent FSK (orthogonal signalling).

The value of A varies with the modulation system used but it does not affect the shape of the error ratio curve. See curve 1 of figure E.1.

* The figures in square brackets refer to clause E.9.

Copyright International Electrotechnical Commission
Provided by IHS under license with IEC
No reproduction or networking permitted without license from IHS Not for Resale

Other examples of error ratio function are (see page 406 of reference [1]):

$$Err_{\text{bit}} = 0{,}5 \exp\left(-C / A\right) \qquad \text{(E.2)}$$

where

C is the ratio of the carrier-to-noise power;

A = 1 for differentially coherent PSK;

A = 2 for non-coherent FSK.

See curve 2 of figure E.1. It is also assumed in this annex that the carrier power is directly proportional to the input-signal level.

Error ratio curves are most often presented in the format of log error ratio versus input-signal level in decibels.

Error ratio curves measured on receiver-decoders may differ from those in figure E.1, but most will be sufficiently similar to this model. Since the curve for equation (E.1) has the least slope in the region of 0,01 error ratio, it will be used as the bit error ratio curve for the remainder of this discussion. The error ratio curve of a receiver-decoder is not known by the experimenter and can vary significantly from this example. The dispersion and risk obtained using this error ratio curve should be about one-half that stated in E.3.2 so that the methods of measurement and compliance test methods are viable for measuring receiver-decoders that have error ratio curves with slopes of about one-half that of the examples.

E.5.1.2 For degradation measurements

Selectivity, spurious response immunity, intermodulation response immunity and impulsive noise tolerance are degradation measurements as they measure the level of unwanted signals. In this discussion, the following model for degradation measurements will be used; it is also applicable to the compliance test methods.

In these methods of measurement, the wanted signal level is first set at the reference sensitivity without the unwanted power applied to the input of the receiver. Then the wanted signal level is increased 3 dB (twice the power) which accounts for the factor 2 in the numerator in the following equation. The same reference error ratio (the same signal-to-noise ratio) is reproduced by applying the unwanted power.

$$\text{Signal-to-noise ratio} = \frac{2S}{N + U} \qquad \text{(E.3)}$$

where

S is the wanted signal power corresponding to the receiver-decoder reference sensitivity;

N is the noise power of the receiver and is assumed to be constant;

U is the unwanted signal power or the power of the on-channel intermodulation response for spurious and intermodulation immunity measurements.

U is the unwanted power in the receiver (e.g. at the detector) and has been attenuated by the receiver. The input unwanted signal level recorded in the degradation measurements will be a function of the receiver attenuation and of a non-linear coefficient.

In this discussion, for selectivity, spurious response immunity and impulsive noise tolerance, it is assumed that U is proportional to the input level of the unwanted signal(s). If the unwanted power is generated by an intermodulation process then U may vary exponentially as a power of the unwanted signal(s). In this case, the degradation bit error ratio curve will have a steeper slope.

--`,,`,,`-`-`,,`,,`,`,,`---

Copyright International Electrotechnical Commission
Provided by IHS under license with IEC
No reproduction or networking permitted without license from IHS Not for Resale

If the signal-to-noise ratio from equation (E.3) is applied to equation (E.1) as *C*, the result is curve 3 in figure E.1. In the graph, the input-signal level is *U*, so the bit error ratio increases as *U* increases and the slope of the curve near the reference error ratio is less steep than the bit error ratio curve.

E.5.1.3 Sensitivity measurement impact on degradation measurements and compliance tests

Curve 3 in figure E.1 is based on the assumption that the value *S* is replaced by 2*S* in equation (E.3). In the degradation method of measurement, the value of *S* used is an estimate obtained from the sensitivity measurement and has a distribution. If the value of *S* used is not exactly the value for the receiver-decoder sensitivity, the shape of the degradation error ratio curve will move either to the right or to the left as well to change its slope. The result of this effect is that the dispersion and risk are greater than they would be if the exact sensitivity were known and used in the degradation measurements and compliance tests.

E.5.2 Shape of character string error ratio curves

For characters which are composed of a number of bits, the shape of the error ratio curves is derived from the bit error ratio curve. The shape is a function of the number of bits in the character and whether error correction codes are used.

For example, curve 1 of figure E.2 is the character error ratio curve for an 8-bit character with no error correction and curve 2 is for a 15-bit character with one bit of error correction capability.

The main difference between bit stream and character string error ratio curves is that while the maximum error ratio for bit stream is 0,5, the maximum ratio for character string can be almost 1,0. Generally, but not always, the slope of the curve near the reference error ratio of 0,01 is steeper for character strings than for bit streams.

For the remainder of this discussion, a character of 8 bits with no error correction has been used, so the character error ratio is

$$Err_{\text{char}} = 1 - \left(1 - Err_{\text{bit}}\right)^8 \qquad \text{(E.4)}$$

where Err_{bit} is the bit error ratio from equation (E.1).

NOTE – The equation above is correct with the assumption that the bit errors are independent. This assumption is used in this annex. However, there are many cases where this assumption does not hold. For example, in some modulations with differential encoding (e.g. PSK modulation with differentially coherent detection) bit errors occur in pairs. In this case for low bit error ratios:

$$Err_{\text{char}} = 1 - \left(1 - Err_{\text{bit}} / 2\right)^8$$

Other types of modulation, decoders and propagation which tend to have the bit errors correlated may have different relationships which would change the shape of the error ratio curves used in the examples in this annex.

Degradation curve 3 of figure E.2 was derived using the same procedure (see E.5.1.1) as for degradation curve 3 of figure E.1.

Codes that use more bits per character and use error correcting codes generally will have steeper slopes near the reference error ratio.

E.5.3 Shape of message error ratio curves

Messages can take on many configurations and therefore the error ratio curves will vary a great deal. The example chosen for this discussion consists of 128 bits (e.g. 16 8-bit characters) with no error correction and is shown in figure E.3. While the length of the message is not uncommon, most systems would have some form of error control which

Copyright International Electrotechnical Commission
Provided by IHS under license with IEC
No reproduction or networking permitted without license from IHS Not for Resale

generally would make the slope of the error ratio curve greater near the reference error ratio of 0,2. The curve of Err_{mess} is derived from the bit error ratio curve given in curve 1 of figure E.1 using the following function:

$$Err_{mess} = 1 - \left(1 - Err_{bit}\right)^{128} \quad \text{(E.5)}$$

where Err_{bit} is the bit error ratio from equation (E.1).

For this example, a 0,2 message error ratio corresponds to a 0,0017 bit error ratio.

NOTE – The equation above is correct with the assumption that the bit errors are independent. This assumption is used in this annex. However, there are many cases where this assumption does not hold. For example, in some modulations with differential encoding (e.g. PSK modulation with differentially coherent detection) bit errors occur in pairs. In this case for low bit error ratios:

$$Err_{mess} = 1 - \left(1 - Err_{bit} / 2\right)^{128}$$

Other types of modulation, decoders and propagation which tend to have the bit errors correlated may have different relationships which would change the shape of the error ratio curves used in the examples in this annex.

Degradation curve 2 of figure E.3 was derived using the same procedures (see E.5.1.1) as for degradation curve 3 of figure E.1.

Codes that use more bits in the message and use error correcting codes generally will have steeper slopes near the reference message error ratio of 0,2.

E.5.4 Shape of selective calling error ratio curves

E.5.4.1 For digital modulation

When the selective call transmission has a digital form, the results will be very similar to that of message (see above) and for this discussion will be assumed to be the same for both sensitivity and degradation measurements.

E.5.4.2 For analogue modulation

For AM and SSB, when the selective call transmission consists of several audio-frequency tones transmitted simultaneously or in sequence, the selective calling error ratio curve may be similar in shape to the character error ratio curve. For FM and PM, the error ratio curves may have a considerably steeper slope. While the error ratio of each tone detector may have a shape not unlike that of equation (E.1), many designs have the tone detect level located on the steep portion of the FM threshold curve (i.e. below the threshold knee). In this case, the signal-to-noise ratio C in equation (E.1) may vary much faster than the input-signal level and the selective calling error ratio may vary from 0,9 to 0,1 for a one or two decibel change in input level.

E.5.5 Shape of error ratio curves for fading signals

The measurement of sensitivity for fading signal uses an input signal that is produced by a Rayleigh fading simulator (see annex C). The bit stream, character string and message error ratio curves that result from using this signal differ considerably from those obtained from the static condition.

E.5.5.1 Shape of bit stream error ratio curve

For this discussion, the error ratio versus the mean carrier-to-noise power ratio function that models non-coherent FSK (see page 407 of reference [1]) will be used and is:

Copyright International Electrotechnical Commission
Provided by IHS under license with IEC
No reproduction or networking permitted without license from IHS Not for Resale

$$Err_{bit} = \frac{1}{2 + \left(\overline{C} / A\right)} \qquad \text{(E.6)}$$

where

$\overline{C}$ is the mean carrier-to-noise power ratio;

A = 1 for differentially coherent PSK;

A = 2 for non-coherent FSK.

A curve of this function is shown in figure E.4, curve 1. It has been normalized to have a 0 dB input-signal level produce a 0,01 bit error ratio and is shown for ±6 dB about this level. Again it is assumed that the mean carrier power is proportional to the mean input-signal level.

E.5.5.2 Shape of character string error ratio curve

Using the example of a character in E.5.2 applied to equation (E.6), the normalized curve is almost identical to the bit stream error ratio curve and is shown in figure E.4, curve 2.

E5.5.3 Shape of message error ratio curve

Using the example of a message in E.5.3 applied to equation (E.6), the normalized curve for 0 dB to produce 0,2 error ratio is shown in figure E.4, curve 3.

E.6 Models for the straddle method of measurement

The straddle method of measurement is used in this standard for bit stream and character string measurements of sensitivity, fading and degradation. The sensitivity and fading methods of measurement and compliance test methods have been analysed to determine the expected dispersion and risk of the examples used. For the bit stream only, the degradation measurement has been analysed using the assumption that the sensitivity is known. However, to simulate the degradation method of measurement as it is used, Monte Carlo simulations were used to obtain estimates of the dispersion and risk.

E.6.1 Model for bit stream sensitivity measurement

For this discussion, a bit error ratio curve given by equation (E.1) is assumed and the known sensitivity is 0 dB. All other input levels are referenced to 0 dB. See figure E.1, curve 1.

The method of measurement says to start the measurement at an input-signal level corresponding to the specified reference sensitivity. Let us assume, for example, that this starting level L_1 corresponds to a bit error ratio higher than 1 %. The successive input-signal levels L_i (i = 1, 2,..., n) will be increased by steps of 0,5 dB. (A similar analysis could be performed if the initial bit error ratio was lower than 1 %.)

When 2 500 bits are transmitted with level L_i, one of the following events occurs:

– Event X: there are more than 25 bits in error. Then increase the input-signal level by 0,5 dB and $L_{i+1} = L_i + 0{,}5$.

– Event Y: there are exactly 25 bits in error. Then the measurement is terminated ($L_i = L_n$). Record the bit sensitivity as $S = L_n$. The preceding levels tested as possible values of S have been L_1,..., L_i,..., $L_n = S$ (called “series one”).

– Event Z: there are (for the first time) less than 25 bits in error. Then the measurement is terminated ($L_i = L_n$). Record the bit sensitivity as $S = L_n$ – 0,25 dB (or L_{n-1} + 0,25 dB). The preceding levels tested as possible values of S have been (L_1 – 0,25), ..., (L_i – 0,25), ..., (L_n – 0,25 = S) (called “series two”) but the corresponding input-signal levels are 0,25 dB higher than S or equal to L_1, ..., L_i, ..., L_n.

Copyright International Electrotechnical Commission
Provided by IHS under license with IEC
No reproduction or networking permitted without license from IHS Not for Resale

Event Y occurs with a probability:

$$P_Y\left(S = L_i\right) = \frac{2500!\left(1 - Err_{bit}\right)^{2475} Err_{bit}^{25}}{25!2745!} \quad \text{(E.7)}$$

where Err_{bit} is the bit error ratio corresponding to level L_i (see figure E.1).

Event Z occurs with a probability:

$$P_Z\left(S = L_i - 0{,}25\right) = \sum_{k=0}^{k=24} \frac{2500!\left(1 - Err_{bit}\right)^{2500-k} Err_{bit}^{k}}{k!\left(2500 - k\right)!} \quad \text{(E.8)}$$

where Err_{bit} is the bit error ratio corresponding to level L_i (see figure F.1).

Obviously the probability of having event X for an input-signal level equal to L_i is:

$$P_X\left(S = L_i\right) = 1 - P_Y\left(S = L_i\right) - P_Z\left(S = L_i - 0{,}25\right) \quad \text{(E.9)}$$

The probability $P\ (L_i)$ that a level L_i of the "series one" be recorded as the sensitivity corresponds to the probability of event Y multiplied by all the probabilities of preceding events X, i.e.:

$$P\left(S = L_i\right) = P_Y\left(S = L_i\right) \times \prod_{j=1}^{j=i-1} P_X\left(S = L_i\right) \quad \text{(E.10)}$$

The probability P (S = L – 0,25) that a level (L_i – 0,25) of the "series two" be recorded as the sensitivity corresponds to the probability of event Z multiplied by all the probabilities of preceding events X, i.e.:

$$P\left(S = L_i - 0{,}25\right) = P_Z\left(S = L_i - 0{,}25\right) \times \prod_{j=1}^{j=i-1} P_X\left(S = L_i\right) \quad \text{(E.11)}$$

For example, the measurement starts at an input-signal level L_i = –2,8 dB, corresponding to a bit error ratio of 0,06 (see figure E.1). The probability of being at the start level is 1, and

$$P\left(S = -2{,}8\right) = P_Y\left(S = -2{,}8\right)$$

$$P\left(S = -2{,}55\right) = P_Y\left(S = -2{,}55\right)$$

If events Y and Z do not occur, the level is increased by 0,5 dB and L_2 = –2,3 dB.

Then, from equation (E.9) and using equations (E.10) and (E.11) alternately:

$$P\left(S = -2{,}3\right) = P_Y\left(S = -2{,}3\right)\left[1 - P_Y\left(S = -2{,}8\right) - P_Z\left(S = -2{,}55\right)\right]$$

$$P\left(S = -2{,}05\right) = P_Z\left(S = -2{,}05\right)\left[1 - P_Y\left(S = -2{,}8\right) - P_Z\left(S = -2{,}55\right)\right]$$

and so on.

Copyright International Electrotechnical Commission
Provided by IHS under license with IEC
No reproduction or networking permitted without license from IHS Not for Resale

For this example, the different values obtained are plotted in figure E.5 and the values greater than 10^{-6} and the cumulative probability are given in table E.2.

Table E.2 – Cumulative probability

Value of S dB	$P_{(S)}$	Cumulative probability $P_{(S)}$
–0,8	0,001 15	0,001 15
–0,5	0,001 45	0,002 60
–0,3	0,044 14	0,046 74
–0,05	0,123 93	0,170 67
0,2	0,051 53	0,222 20
0,45	0,612 96	0,835 16
0,7	0,000 62	0,835 78
0,95	0,163 49	0,999 27
1,2	$<10^{-6}$	0,999 27
1,45	0,000 73	1,000 00

The results obtained for the example are related to the starting level of –2,8 dB and other starting levels would have slightly different results. By repeating the calculation for many starting levels (e.g. –3 dB to –2,5 dB) an envelope of $P_{(S)}$ can be plotted. This can be considered the probability distribution of $P_{(S)}$ for this example and is curve 1 in figure E.6. The accuracy for this example, at any low starting level, is –0,014 dB.

The cumulative probability $P_{(S)}$ is curve 2 of figure E.6 and shows that 90 % of the results will be between –0,5 dB and 0,4 dB (levels for which $P_{(S)}$ equals 0,05 and 0,95) which is the dispersion for this example for any low starting level.

E.6.2 Bit stream degradation measurement

The analysis for the degradation measurements is similar to that for the sensitivity measurement except for two items.

The first is that U, the unwanted signal level, is used (see E.5.1.2) and, for this example, curve 3 of figure E.1 is used.

The method of measurement uses the same events X, Y and Z mentioned in E.1 except that “input signal” is replaced by “unwanted input signal” and all the words “decrease”, “increase”, “subtract” and “add” are reversed.

The second is that the unwanted input-signal level that results in an initial high error ratio will be high (e.g. 3,4 dB is assumed in this example) and the measurement method will progressively lower the unwanted input-signal level.

The resultant probability distribution, $P_{(S)}$, for a bit stream degradation measurement is curve 3 of figure E.6. The accuracy of this example is 0,112 dB.

Curve 4 of figure E.6 is the cumulative probability of $P_{(S)}$ and shows that for this simplified model given in this example the degradation dispersion is –0,6 dB to 0,9 dB.

Curves 3 and 4, which are helpful in obtaining an understanding of the methods of measurement, are based on the simplifying assumption that the estimate of the bit sensitivity is exactly known and used in the measurement. As discussed in E.5.1.3, this is not the case. As shown in figure E.6, curve 1, the bit sensitivity estimate has a distribution. When this distribution is applied to S of equation (E.3), the resultant degradation dispersion is greater. An easy way to estimate the dispersion for this measurement is to use a Monte Carlo simulation of the degradation measurement. In the simulation, the sensitivity measurement is first simulated and the result obtained is used in the degradation simulation. In this way, the sensitivity

Copyright International Electrotechnical Commission
Provided by IHS under license with IEC
No reproduction or networking permitted without license from IHS Not for Resale

variation is included in the all-over simulation. In the simulation as in the measurement, which is a ratio measurement, the degradation estimate is obtained by subtracting the results of the degradation measurement from the estimate of the sensitivity. Since there is a positive correlation (for this example, the correlation coefficient is 0,52 as determined by the Monte Carlo simulation) between the sensitivity estimate and the degradation, this reduces the dispersion. It is interesting to note that, for this example, curves 3 and 5 are nearly the same. Curve 5 of figure E.6 is a probability histogram of the result of 5 000 simulated measurements, and curve 6 is the cumulative probability. The results of the simulation indicate an accuracy of the degradation measurement of 0,09 dB and a dispersion of –0,6 dB to 1,0 dB.

Since the Monte Carlo simulation is more representative of the method of measurement, for the rest of this annex the degradation dispersion values stated will be from Monte Carlo simulations. However, the analysis given in E.6.1 and E.6.2 provides a good insight into the process of the method of measurement.

E.6.3 Character string sensitivity measurement

The only difference from the bit stream sensitivity analysis (see E.6.1) for character string sensitivity measurement is that Err_{char} is substituted for Err_{bit} in equations (E.7) and (E.8). For this example Err_{char} is given in equation (E.4) and the results are shown in figure E.7, curves 1 and 2. Since the character error ratio curve (see figure E.2, curve 1) is steeper than the bit error ratio curve, the dispersion will be less. The accuracy of this example is –0,003 dB and the dispersion is about –0,35 to 0,3 dB.

E.6.4 Character string degradation measurement

The analysis described in E.6.2 is also true for the character string analysis (see E.5.5.2). For this example, the Monte Carlo simulation results are shown in figure E.7, curves 3 and 4. The accuracy for this example is 0,015 dB and the dispersion is about –0,8 dB to 0,9 dB.

E.7 Model for the up/down method of measurement of selective calling and message sensitivity

For the purpose of this annex, the message will be as described in E.5.3. A careful review of figure E.8 explains the up/down process with 10 measurements recorded. This annex is also applicable to selective calling, however many selective calling error ratio curves will be steeper than the example used here.

For average radiation sensitivity, the number of measurements is reduced to one for each of the eight directions measured as indicated in figure E.9.

Figure E.10 shows an example measurement of selectivity (selective calling) as one of a degradation type measurement.

The up/down method differs from the straddle method in that the input-signal level can be either increased or decreased depending upon the outcome of each transmission. Since the change in signal level depends on the preceding step, the up/down method of measurement can be modelled as a simple Markov chain.

An example of one of the Markov equations is shown below and indicates that the probability of being at level $n + 1$ dB is the sum of two probabilities:

a) the probability of being at the n dB level, times the probability of not having three consecutive successes;

b) the probability of being at the $n + 2$ dB level, times the probability of three successful decodes.

$$P_{n+1} = P_n \left[1 - \left(1 - Err\right)^3\right] + P_{n+2}\left(1 - Err_{n+2}\right)^3 \qquad \text{(E.12)}$$

Copyright International Electrotechnical Commission
Provided by IHS under license with IEC
No reproduction or networking permitted without license from IHS Not for Resale

where

P_n, P_{n+1} and P_{n+2} are the probabilities of being at the decibel levels n, $n + 1$ and $n + 2$;

Err_n and Err_{n+2} are error ratios at the decibel levels n, $n + 1$ and $n + 2$;

the decibel levels n, $n + 1$ and $n + 2$ are the input-signal levels for curve 1 of figure E.3.

NOTE 1 – In the up/down method of measurement, the input-signal levels are spaced at 1 dB intervals.

NOTE 2 – For simplicity, the input-signal level to the receiver is used in this discussion, but many of the methods of measurement are written to adjust the input-signal level using an attenuator.

Similar equations can be written for each input-signal level.

Another equation which says that the sum of the probabilities of being at each level is 1, is:

$$P_{n-6} = P_{n-5} + \ldots + P_{n+6} = 1 \qquad \text{(E.13)}$$

Equation (E.13) along with equation (E.12) for each level, less 1, makes a set of simultaneous equations which can be solved for the values of P_n. Since the values of P_n will be different depending on the starting value, the P_n values for many starting values were calculated and the envelope of the P_n values is shown in figure E.11, curve 1.

E.7.1 Message and selective calling accuracy

The first moment of curve 1 will provide a value for the accuracy for the message sensitivity measurement and, for this example, it is 0,02 dB. This indicates that this method of measurement for this example will, on average, find the input-signal level that will produce an error ratio of 0,2. Similar results will be obtained for error ratio curves that differ considerably from the example used here.

E.7.2 Message and selective calling dispersion

It is somewhat more involved to determine the dispersion for the up/down method, as it is estimated using the statistics of sampling.

The standard deviation, σ, of curve 1 of figure E.11 is 0,94 dB. The probability distribution of the result of the measurement is estimated using the sampling theory. Let each level recorded in the measurement be a sample (there are 10 samples in figure E.8) taken from the distribution of curve 1. For any one measurement, the samples will always be at intervals of 1 dB, but if many measurements starting at many different levels are used, the use of the continuous curve is valid. The result of the method of measurement is the average of these samples. The distribution of the results of the measurement (the averages) will have a normal probability distribution [2] with a mean equal to the mean of the distribution whose standard deviation is the accuracy. The standard deviation of the results of the measurements, s, will be as follows:

$$s = \sigma / x^{1/2} \qquad \text{(E.14)}$$

where

x is the number of samples per measurement;

σ is the standard deviation of each sample.

For example, with $x = 10$ the value of the dispersion is:

$$\text{dispersion} = \text{accuracy} \pm 1{,}645\ \sigma / x^{1/2} = -0{,}02 \pm 0{,}5 \text{ dB} \qquad \text{(E.15)}$$

The cumulative distribution of a normal distribution curve for a mean of 0,02 dB and a dispersion of ±0,5 dB is shown in curve 2 of figure E.11.

Copyright International Electrotechnical Commission
Provided by IHS under license with IEC
No reproduction or networking permitted without license from IHS Not for Resale

For the up/down method of measurement, the dispersion can be made smaller by increasing the number of transmissions of the message used.

E.7.3 Message and selective calling degradation measurements

The analysis of the up/down method of measurement used for degradation measurements is similar to that for sensitivity except that, since it is the unwanted signal that is varied, the direction to change the input signal based on the outcome of the transmission is reversed (see E.5.1.2) and the number of measurements is increased to 20 (see figure E.10).

Using, for this example, the error ratio curve 3 of figure E.3 and a Monte Carlo simulation, curve 3 of figure E.11 is generated. From this, the accuracy of this example is calculated to be about 0,09 dB.

The cumulative distribution of the message degradation is shown in curve 4 of figure E.11 and shows a dispersion for this example of –1,9 dB to 1,7 dB. This is just within the goal given in E.3.2.

E.7.4 Model for fading measurement

E.7.4.1 Bit stream and character string fading measurements

Since these measurements use the straddle method, the analysis of the example of the bit stream and character string is similar to that of E.6.1 and E.6.3 except for using the error ratio curve 1 from figure E.4; the results are shown in figure E.12. Since the bit stream and character string error ratio curves are so similar, the accuracy and dispersion for these measurements are nearly the same. The accuracy is –0,21 dB and the dispersion is about –1,5 dB to 0,6 dB.

E.7.4.2 Message and selective calling fading measurements

This measurement uses the up/down method as described in E.6 and E.6.1, E.6.2 and E.6.3. The faded message error ratio curve shown in figure E.4, curve 3 is used and the results are shown in figure E.13. For this example, the accuracy is about –0,09 dB and the dispersion is about –1,3 dB to 1,3 dB.

E.8 Compliance test

E.8.1 Principle of shared risk

In any compliance test there is a chance that the compliance test will give a wrong decision. Because of this, the compliance tests designed by those who will receive or certify the equipment are designed so there is a high probability of failing the compliance test if the equipment is a little worse than the specification limit. On the other hand, the manufacturer would like to see the compliance tests designed so that there is a high probability of passing the compliance test if the equipment is a little better than the specification limit.

To attempt to meet both requirements, the compliance tests in this standard are designed so that, if a receiver-decoder has a radio-frequency parameter that exactly matches the parameter specification, there will be a 0,5 probability that it will pass or fail the compliance test. This is the principle of shared risk. In this circumstance, the error ratio will be the reference error ratio at the specified input-signal level.

E.8.2 Design objectives

The design goal for sensitivity compliance tests is to meet the principle of shared risk and to have a 0,95 probability of passing the compliance test if the equipment is 1 dB, or less, better than the specification limit, and to have a 0,95 probability of failing the compliance test if the equipment is 1 dB, or less, worse than the specification.

Copyright International Electrotechnical Commission
Provided by IHS under license with IEC
No reproduction or networking permitted without license from IHS Not for Resale

For degradation and fading compliance tests, the 0,95 probability of passing or failing are for equipment that are 2 dB, or less, better or worse than the specification.

E.8.3 Compliance test model

For the compliance tests used in this standard, the probability of passing the compliance test is a function of the receiver-decoder error ratio at the specified input-signal level and is:

$$P_{\text{passing}} = \sum_{k=0}^{k=f} \frac{t!\,(1-Err)^{(t-k)}\,Err^{k}}{k!\,(t-k)!} \qquad \text{(E.16)}$$

where

P_{passing} is the probability of passing the compliance test;

Err is the error ratio when the specified signal level is applied to the receiver-decoder;

t is the number of transmissions in the compliance test (e.g. 18, 33, 78 or 2 556):

f is the number of failures allowed in the compliance test (e.g. 3, 6, 15 or 25).

E.8.4 Risk curve

E.8.4.1 Risk curve for sensitivity measurements

In equation (E.16), *Err* is a function of the input-signal level. For the sensitivity measurement, if the receiver-decoder sensitivity is better (e.g. +2 dB) than the specified sensitivity, then when the specified signal level is applied to the receiver-decoder, *Err* will be smaller and the receiver-decoder will have a higher probability of passing. The opposite is true if the sensitivity is worse than the specified sensitivity. For this discussion, 0 dB is the specified input-signal level.

In the examples used in this annex, *Err* can be determined as a function of the input-signal level from the appropriate equations (E.1) through (E.11), thus P_{passing} is a function of the input-signal level.

When the function in equation (E.17) is plotted with *t* and *f* fixed, and the input-signal level is varied in accordance with the error ratio function of the equipment being tested, the resultant curve is called a risk curve. Note that the input-signal level is given as the ratio of the receiver-decoder parameter (e.g. sensitivity) to the specified value of the parameter. The solid-line curve of figure E.14 is derived from equations (E.1) for the sensitivity bit stream compliance test and is the risk curve. The long-dash curve is for character string and the short-dash curve is for selective calling and message.

E.8.4.2 Risk curve for bit stream degradation compliance tests

This example is derived from the model given in E.5.1.2. The result of a degradation measurement is the ratio of the level of the sensitivity to the unwanted signal level. Therefore, if the sensitivity value used is in error, it will affect the shape of the risk curve. If the sensitivity is low, the risk curve will be shifted to the left, and, if it is high, the curve will be shifted to the right. Curve 1 of figure E.15 was calculated on the basis that the sensitivity was low by –0,5 dB. Curve 2 was calculated using a sensitivity that was high by 0,4 dB (see figure E.6, curve 2). Since for the example used in this annex the estimate of the sensitivity will fall between these points 90 % of the time, it follows that the risk curve will fall between curves 1 and 2 of figure E.15. Curve 3 is the risk curve if the true sensitivity were used. The dispersion for the compliance test of degradation is the limits of the input-signal levels between the 95 % point of curve 1 and the 5 % point of curve 2, or –2,2 dB to 1,6 dB.

Copyright International Electrotechnical Commission
Provided by IHS under license with IEC
No reproduction or networking permitted without license from IHS Not for Resale

E.8.4.3 Risk curve for character string degradation compliance tests

Figure E.16 shows the results of risk curves based on the sensitivity values of –0,4 dB and 0,3 dB (see figure E.7, curve 2); the dispersion is –1,5 dB to 1,2 dB.

E.8.4.4 Risk curve for message and selective calling degradation compliance tests

Figure E.17 shows the results of risk curves based on the sensitivity values of –0,55 dB and 0,5 dB (see figure E.11, curve 2); the dispersion is –2,7 dB to 1,9 dB.

E.8.4.5 Risk curve for fading compliance tests

Figure E.18 shows the risk curve for these examples for fading. The bit stream and character string are almost identical and are shown by the solid-line curve. The selective calling and message curve is the short dash-curve.

E.9 References

[1] M. Schwartz *et al*. "*Communication Systems and Techniques*". McGraw-Hill Book Company, New York, 1966.

[2] American Statistical Association, page 109, Volume 43, by W.J. Dixon and A.M. Mood.

Copyright International Electrotechnical Commission
Provided by IHS under license with IEC
No reproduction or networking permitted without license from IHS Not for Resale

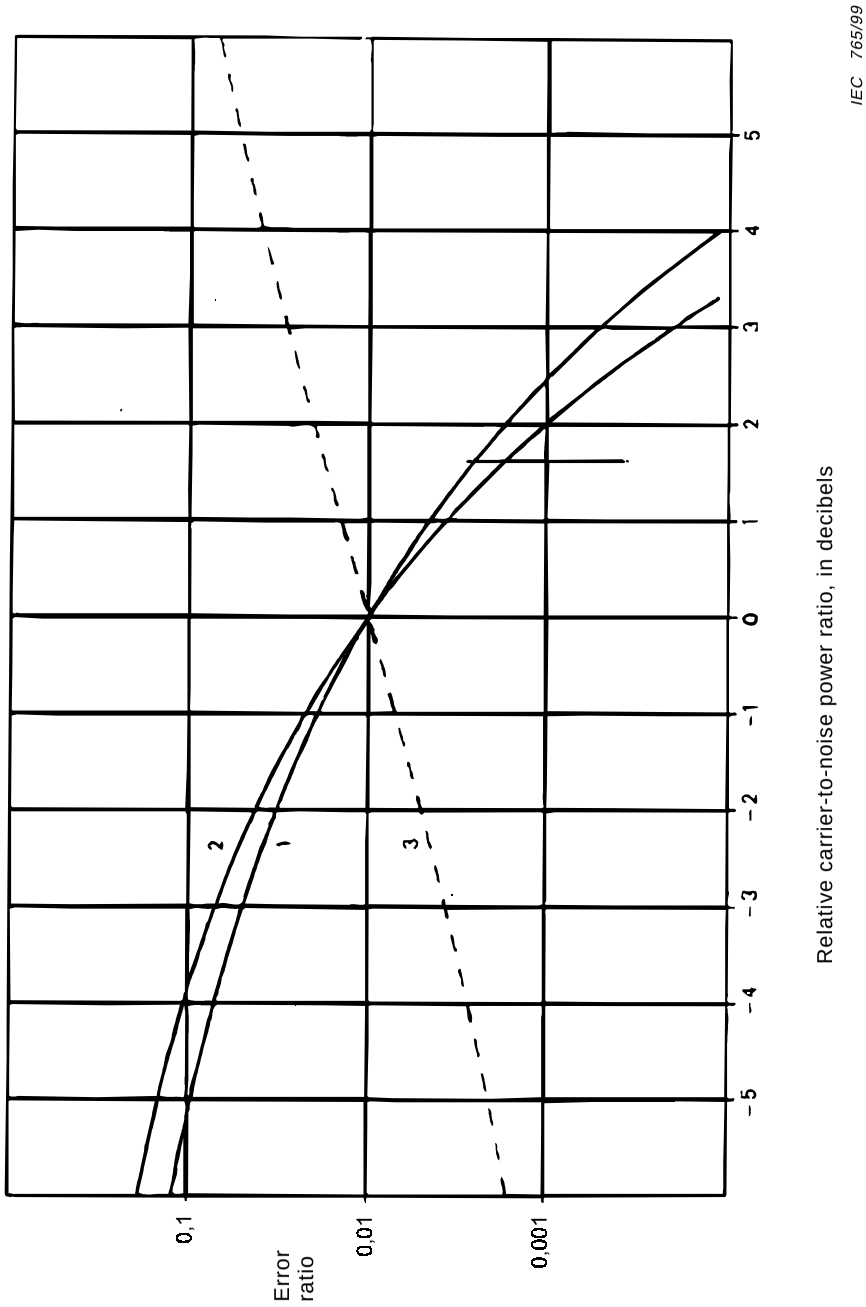

Figure E.1 – Bit error to ratio versus input signal level

Copyright International Electrotechnical Commission
Provided by IHS under license with IEC
No reproduction or networking permitted without license from IHS
Not for Resale

Copyright International Electrotechnical Commission
Provided by IHS under license with IEC
No reproduction or networking permitted without license from IHS
Not for Resale

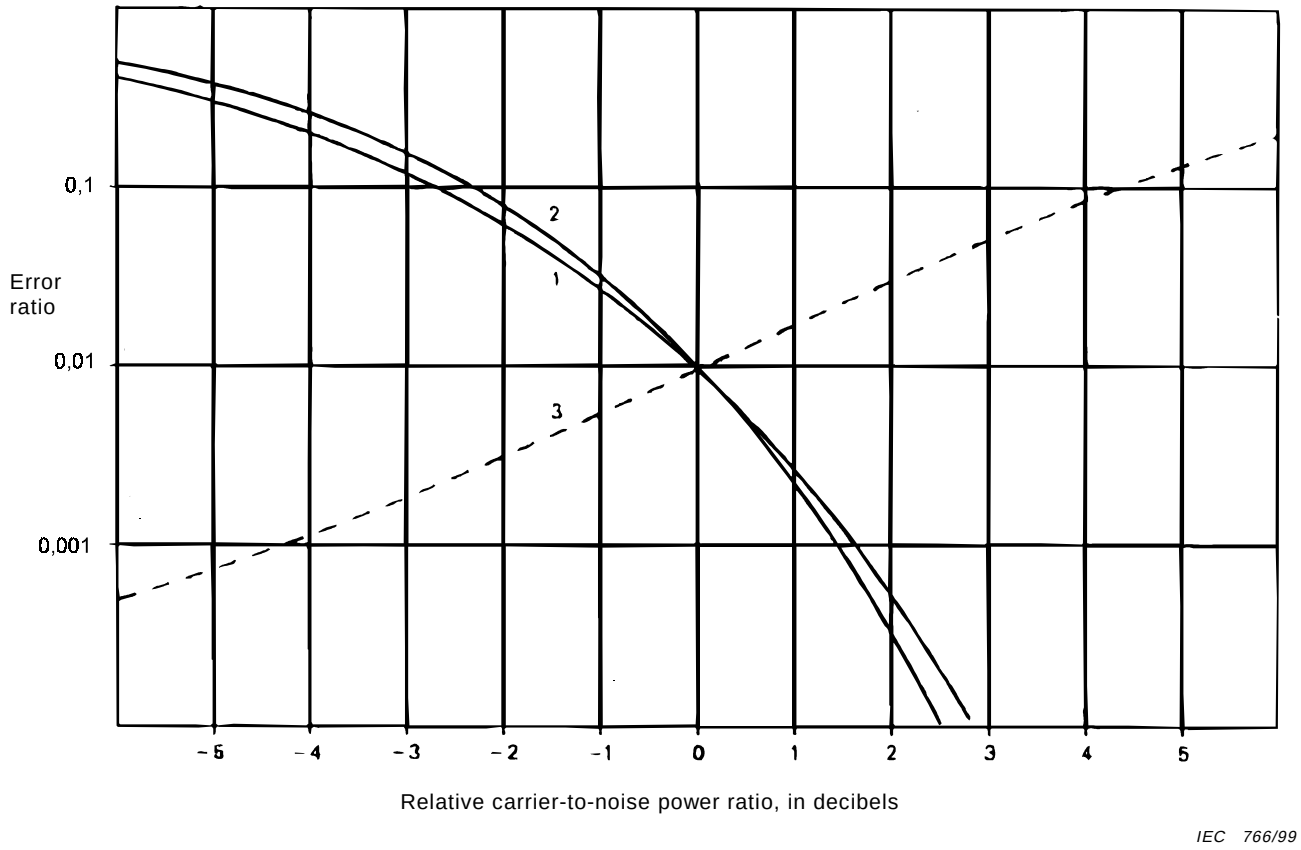

Figure E.2 – Character error ratio versus input signal level

Copyright International Electrotechnical Commission
Provided by IHS under license with IEC
No reproduction or networking permitted without license from IHS
Not for Resale

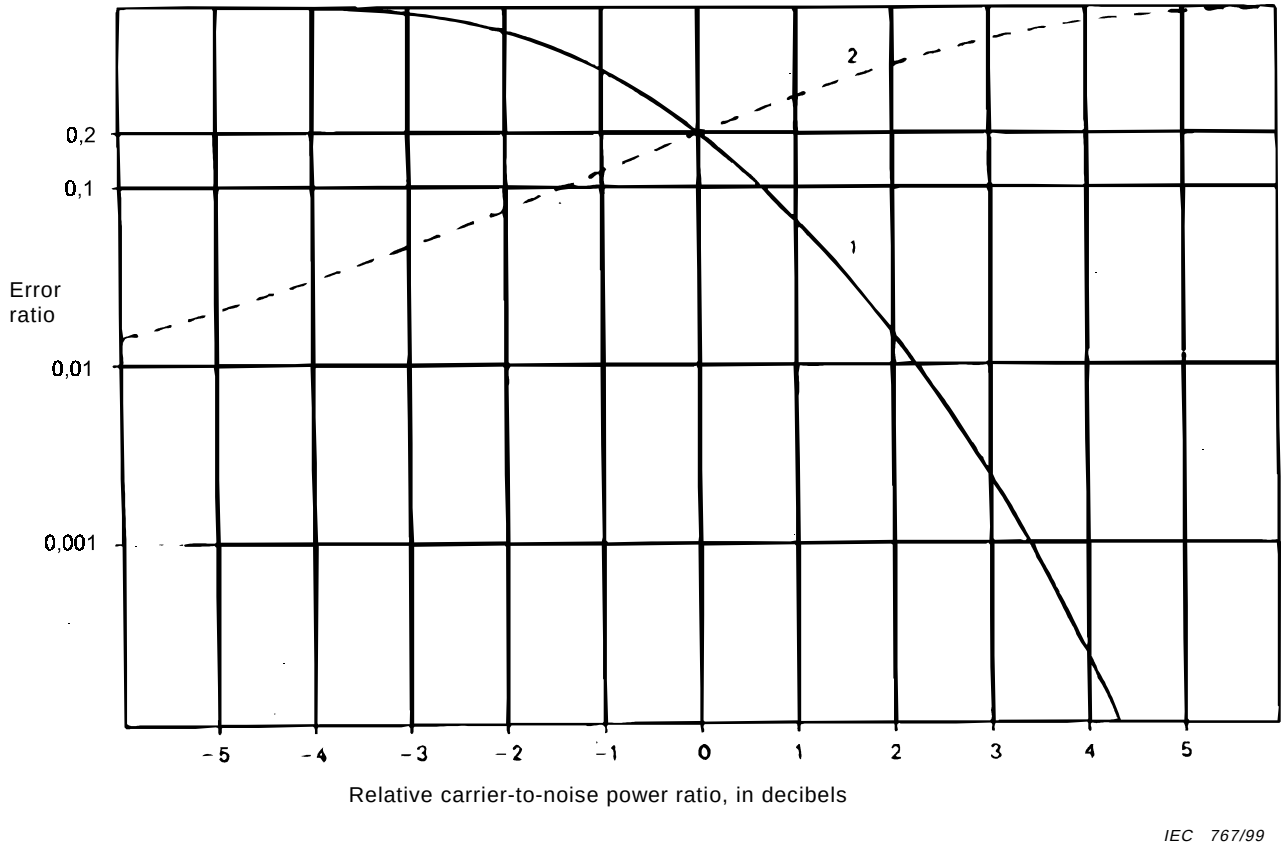

Figure E.3 – Message error ratio versus input signal level

Copyright International Electrotechnical Commission
Provided by IHS under license with IEC
No reproduction or networking permitted without license from IHS
Not for Resale

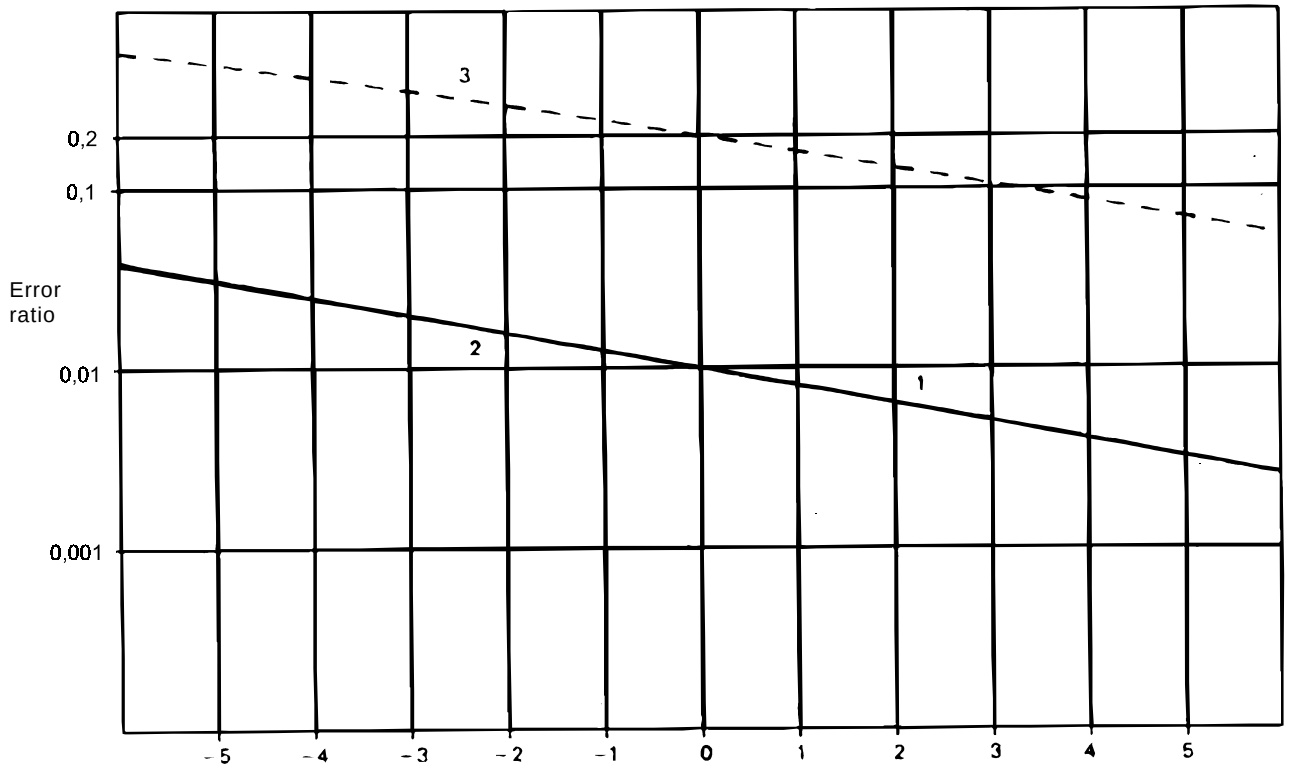

Figure E.4 – Bit, character and message error ratio versus faded input signal level

Copyright International Electrotechnical Commission
Provided by IHS under license with IEC
No reproduction or networking permitted without license from IHS
Not for Resale

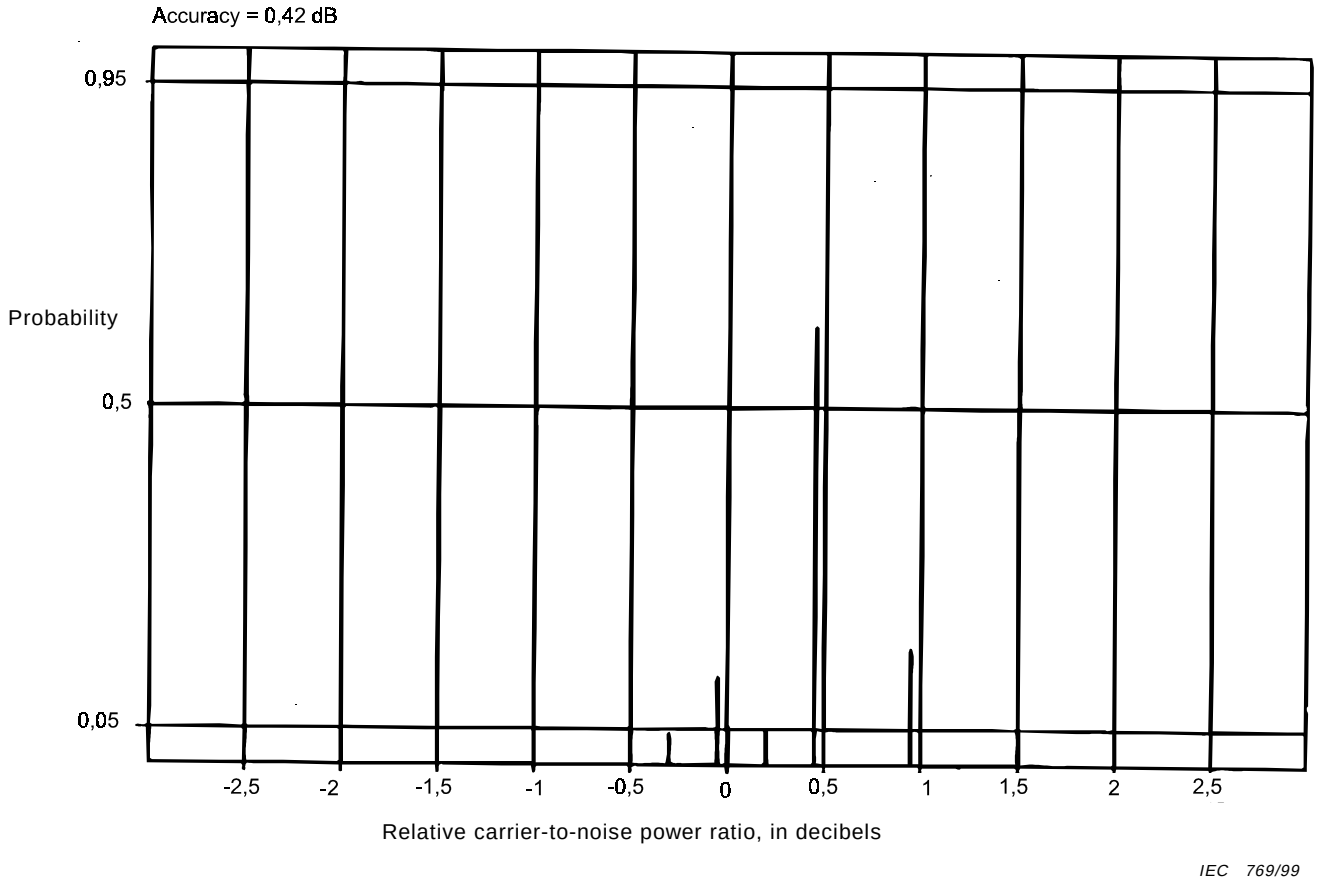

Figure E.5 – Straddle method – Sensitivity (Bit stream)
Accuracy and dispersion

Copyright International Electrotechnical Commission
Provided by IHS under license with IEC
No reproduction or networking permitted without license from IHS
Not for Resale

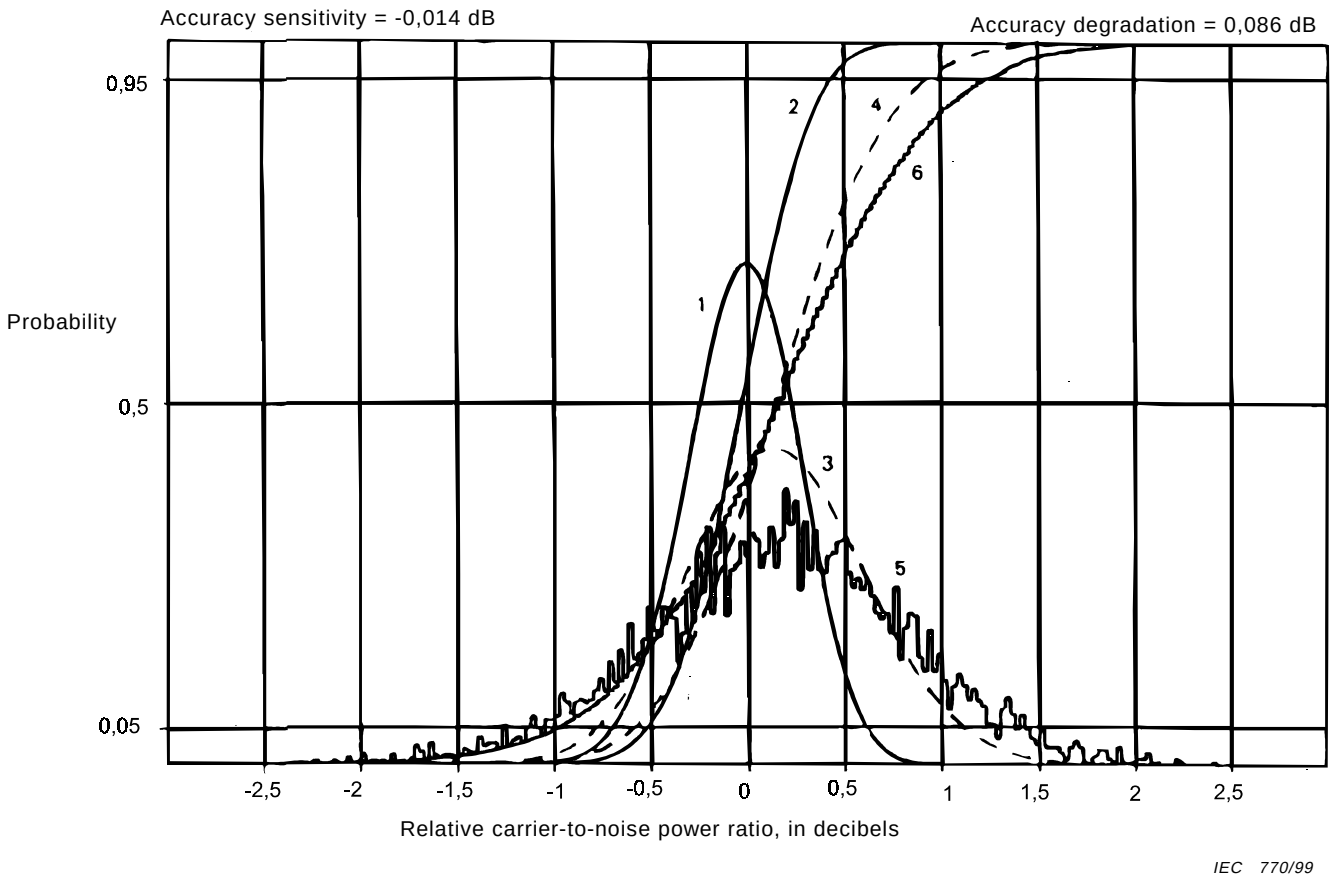

Figure E.6 – Straddle method – Bit stream – Accuracy and dispersion

Copyright International Electrotechnical Commission
Provided by IHS under license with IEC
No reproduction or networking permitted without license from IHS
Not for Resale

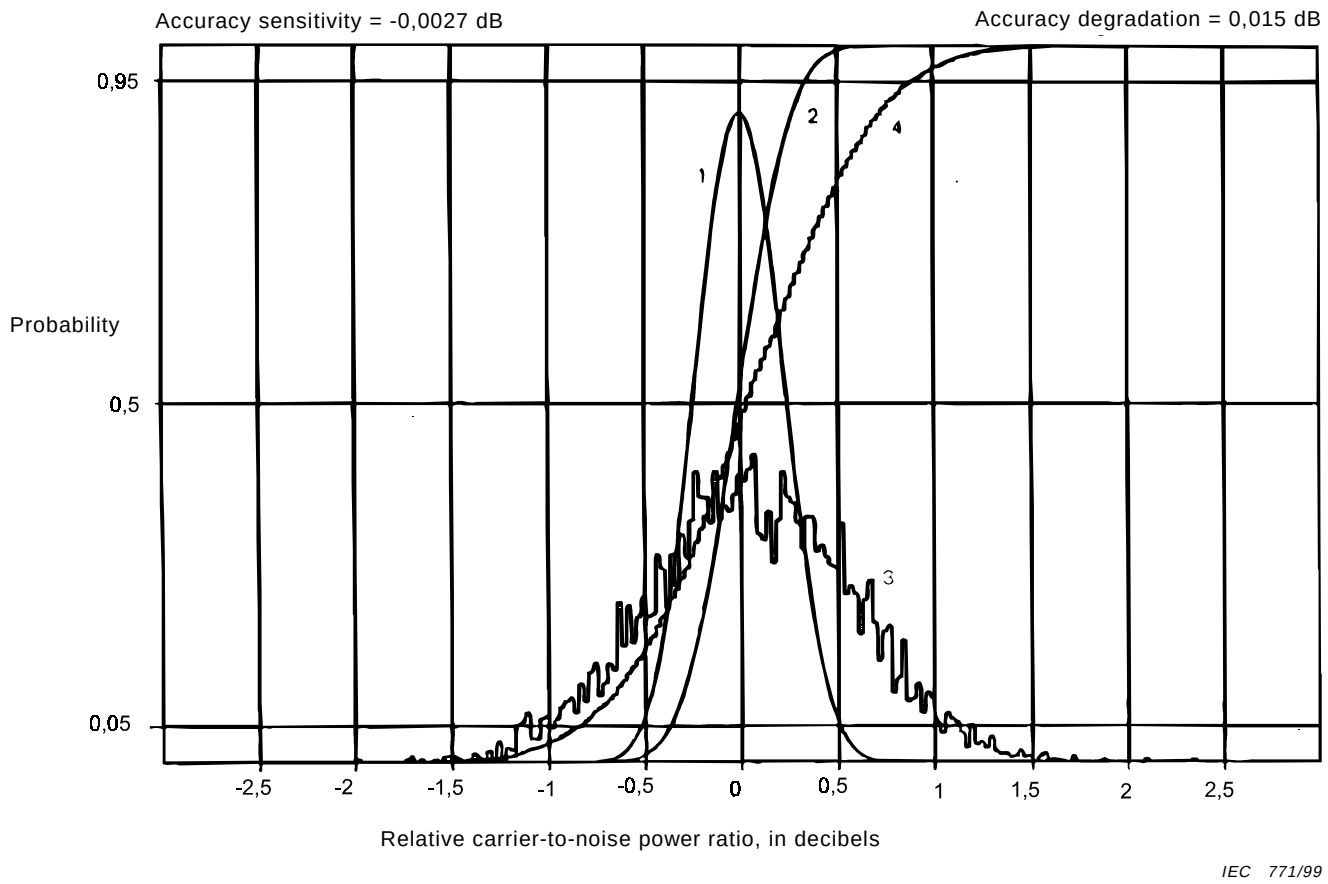

Figure E.7 – Straddle method – Character string – Accuracy and dispersion

Copyright International Electrotechnical Commission
Provided by IHS under license with IEC
No reproduction or networking permitted without license from IHS
Not for Resale

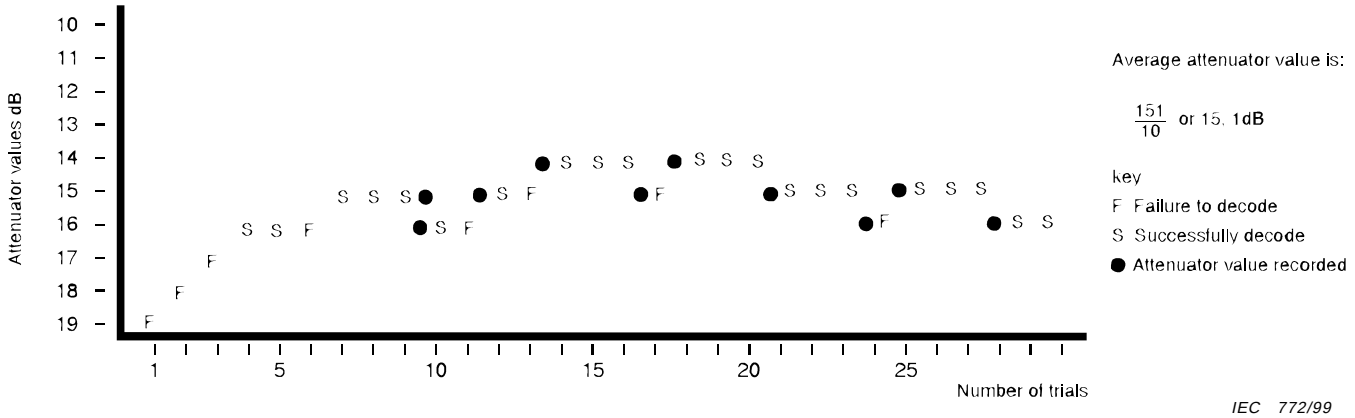

Figure E.8 – Example of measurement of sensitivity (selective calling)

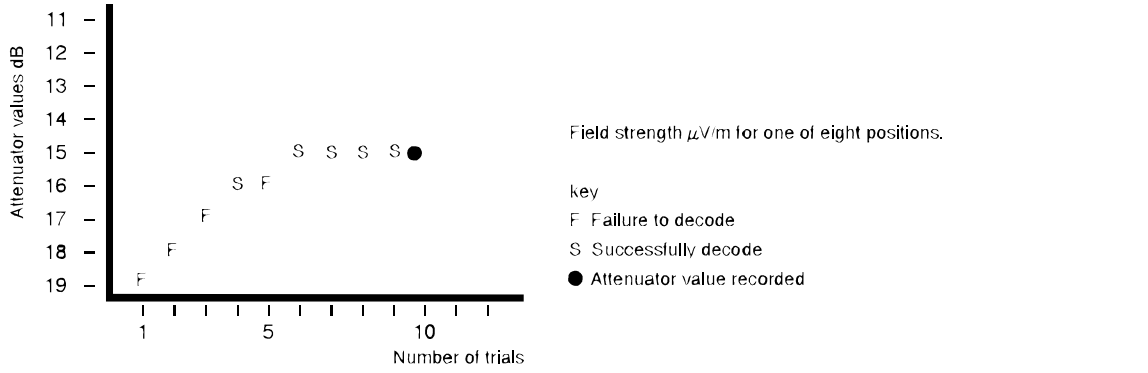

Figure E.9 – Example of measurement of average radiation sensitivity (selective calling)

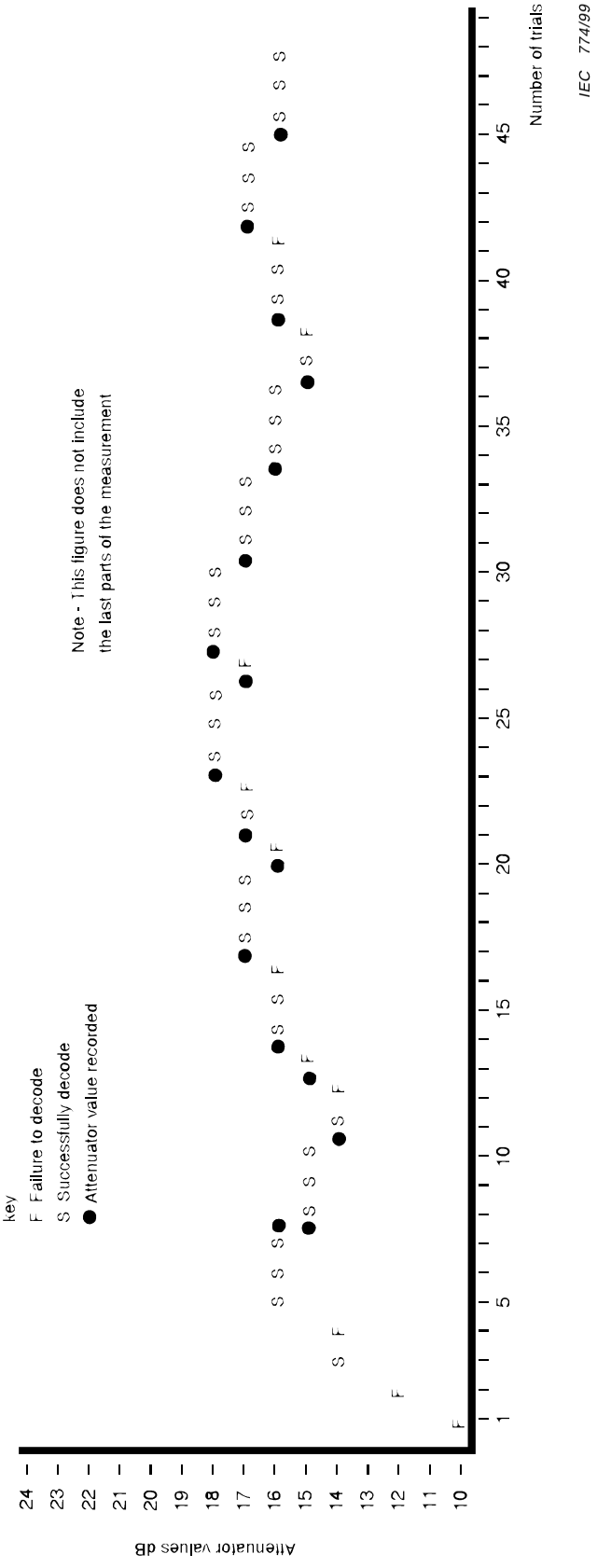

Figure E.10 – Example of measurement of selectivity (selective calling)

Copyright International Electrotechnical Commission
Provided by IHS under license with IEC
No reproduction or networking permitted without license from IHS
Not for Resale

Copyright International Electrotechnical Commission
Provided by IHS under license with IEC
No reproduction or networking permitted without license from IHS
Not for Resale

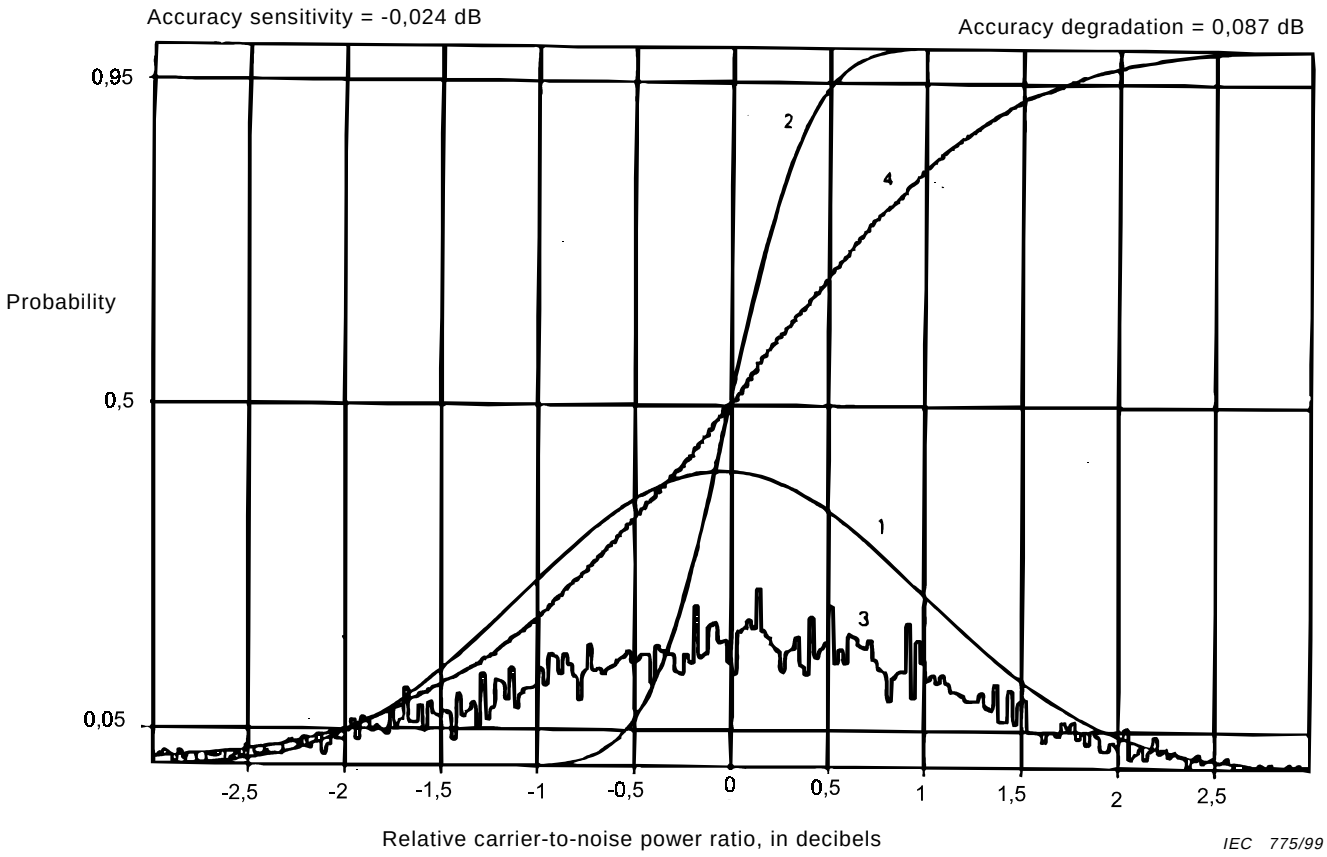

Figure E.11 – Up/Down method – Message – Accuracy and dispersion

Copyright International Electrotechnical Commission
Provided by IHS under license with IEC
No reproduction or networking permitted without license from IHS
Not for Resale

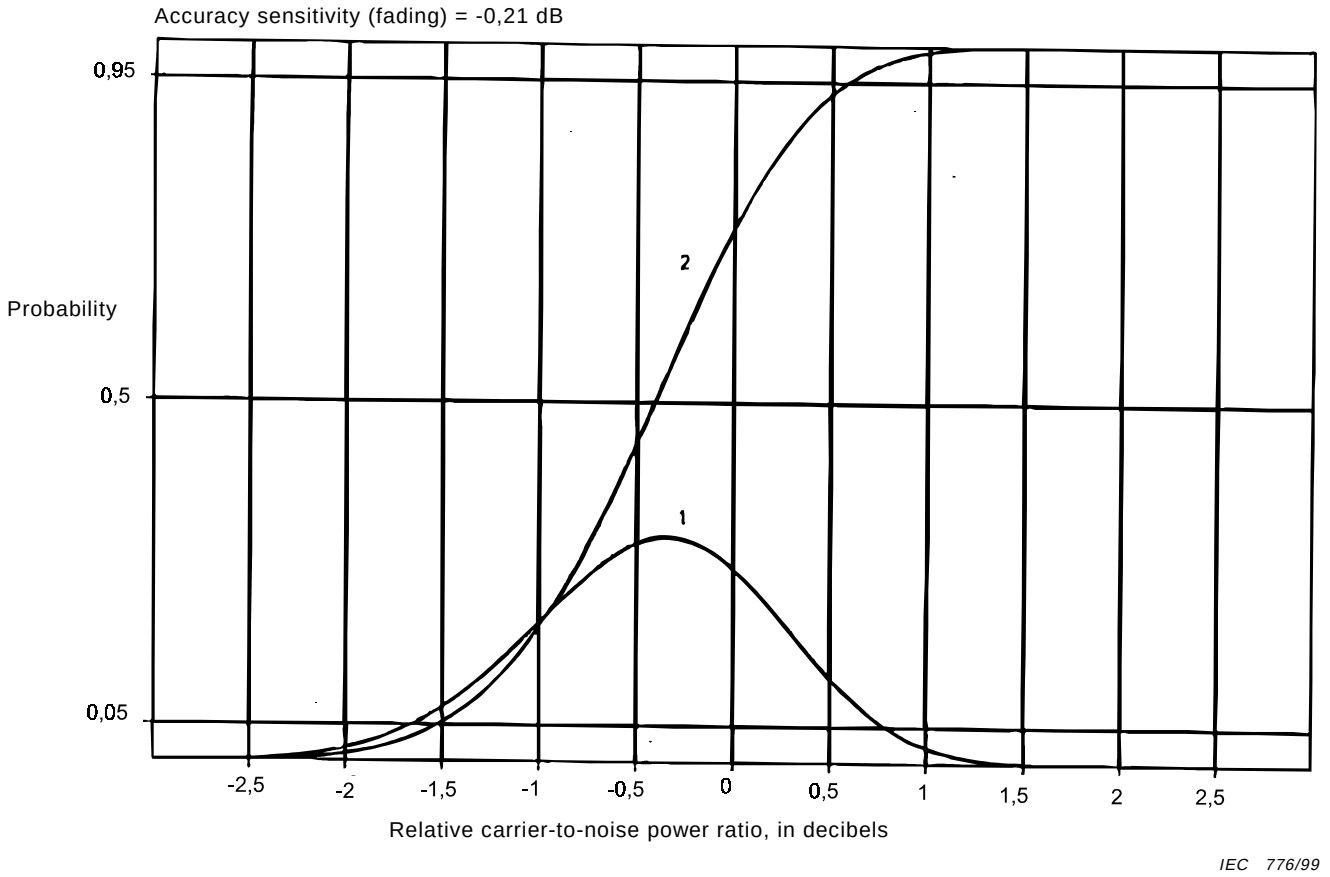

Figure E.12 – Straddle method fading – Bit stream and character string – Accuracy and dispersion

Copyright International Electrotechnical Commission
Provided by IHS under license with IEC
No reproduction or networking permitted without license from IHS
Not for Resale

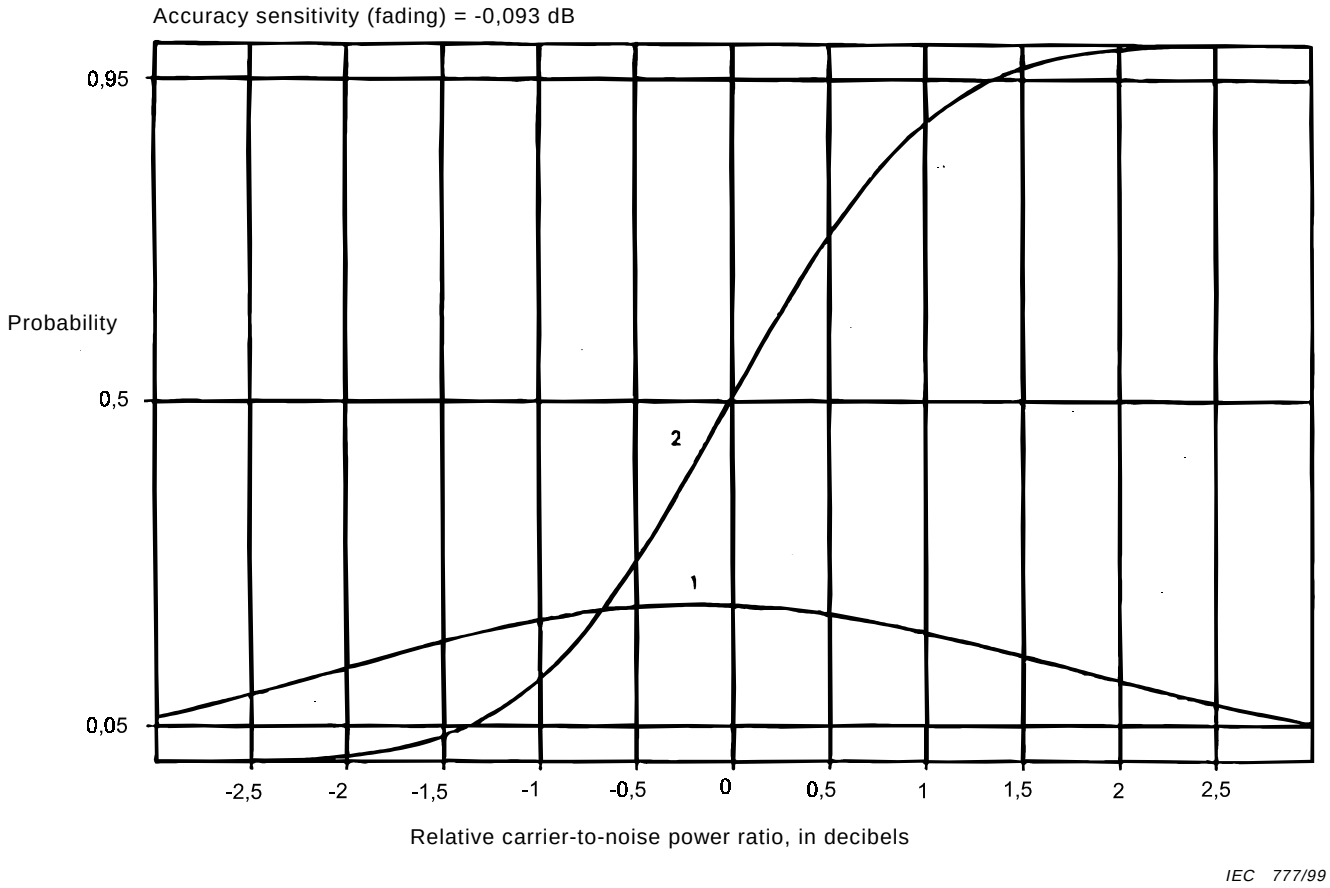

Figure E.13 – Up/Down method fading – Message – Accuracy and dispersion

Copyright International Electrotechnical Commission
Provided by IHS under license with IEC
No reproduction or networking permitted without license from IHS
Not for Resale

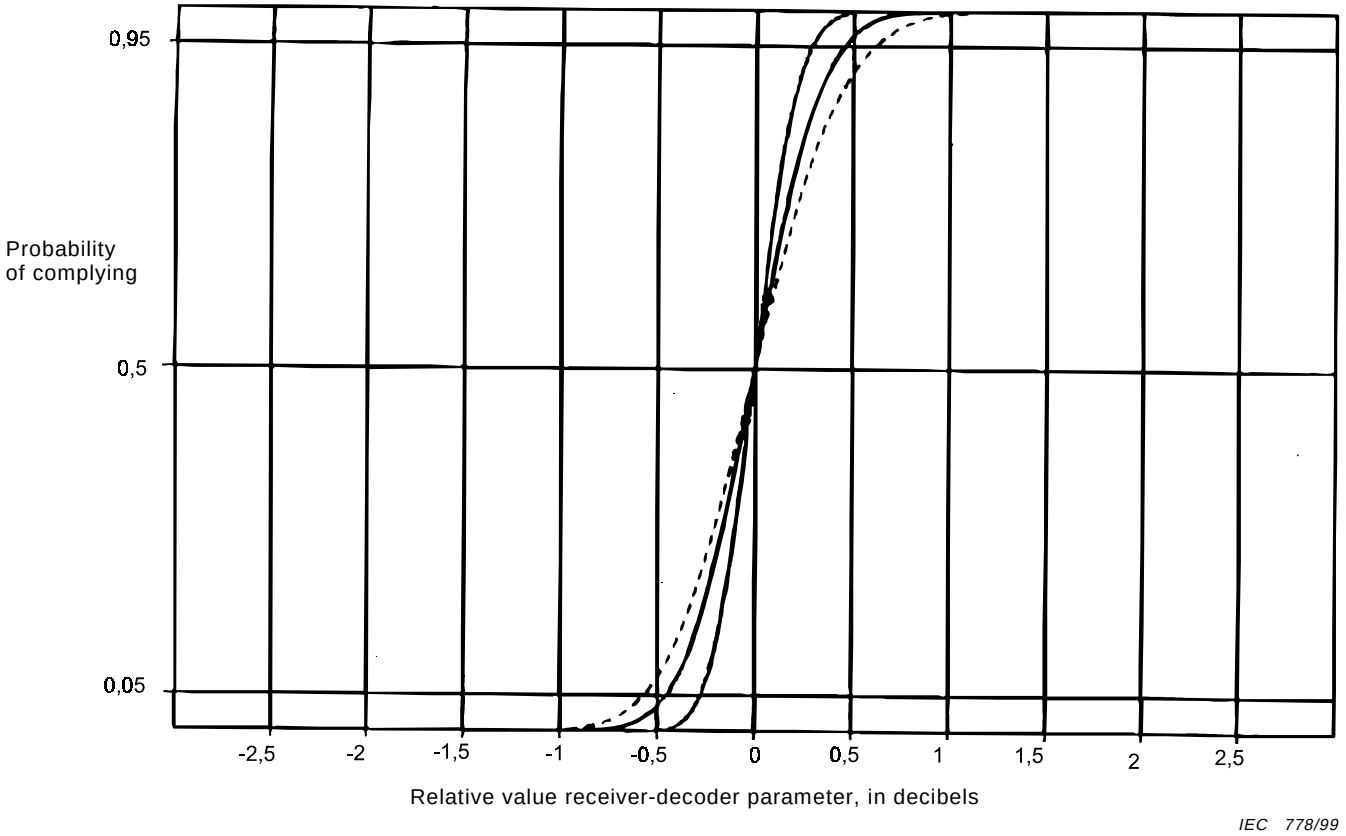

Figure E.14 – Risk curve for sensitivity – Bit stream, character string and message

Copyright International Electrotechnical Commission
Provided by IHS under license with IEC
No reproduction or networking permitted without license from IHS
Not for Resale

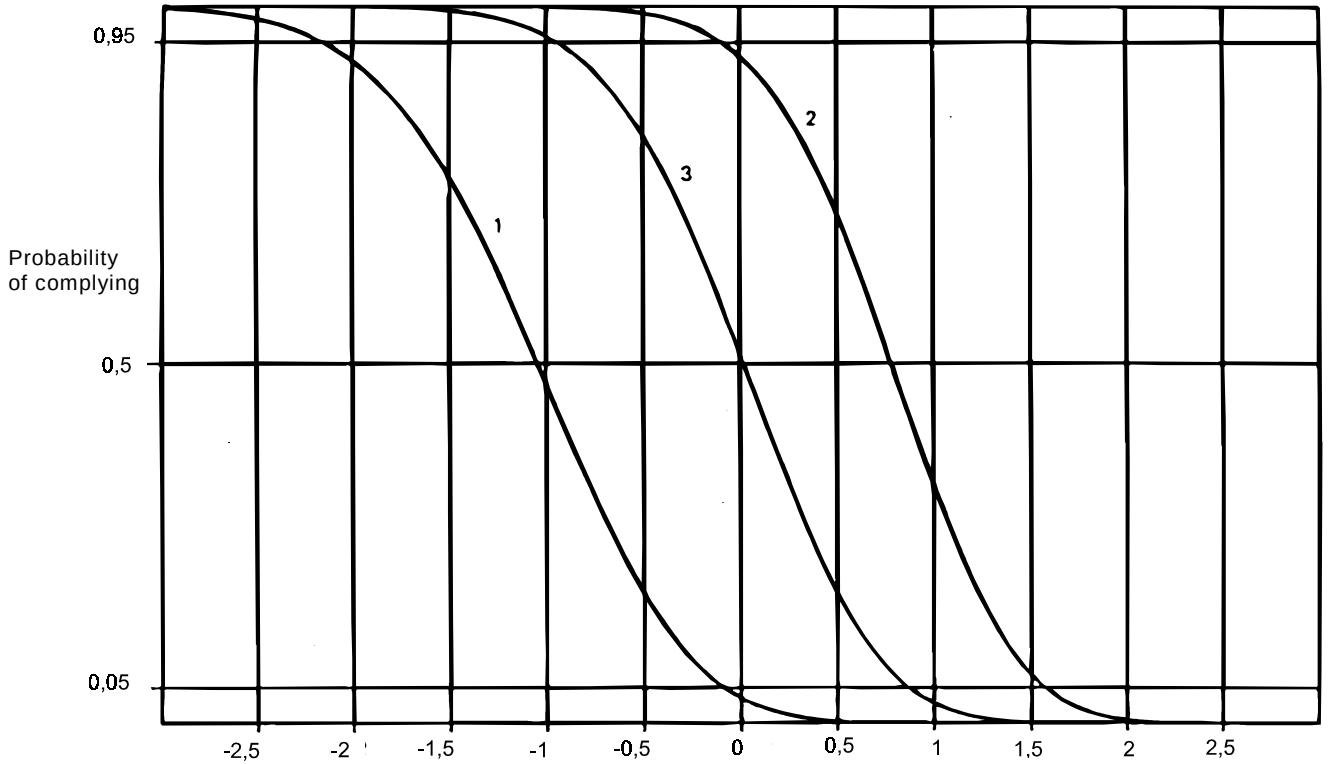

Figure E.15 – Risk curve for degradation – Bit stream

Copyright International Electrotechnical Commission
Provided by IHS under license with IEC
No reproduction or networking permitted without license from IHS
Not for Resale

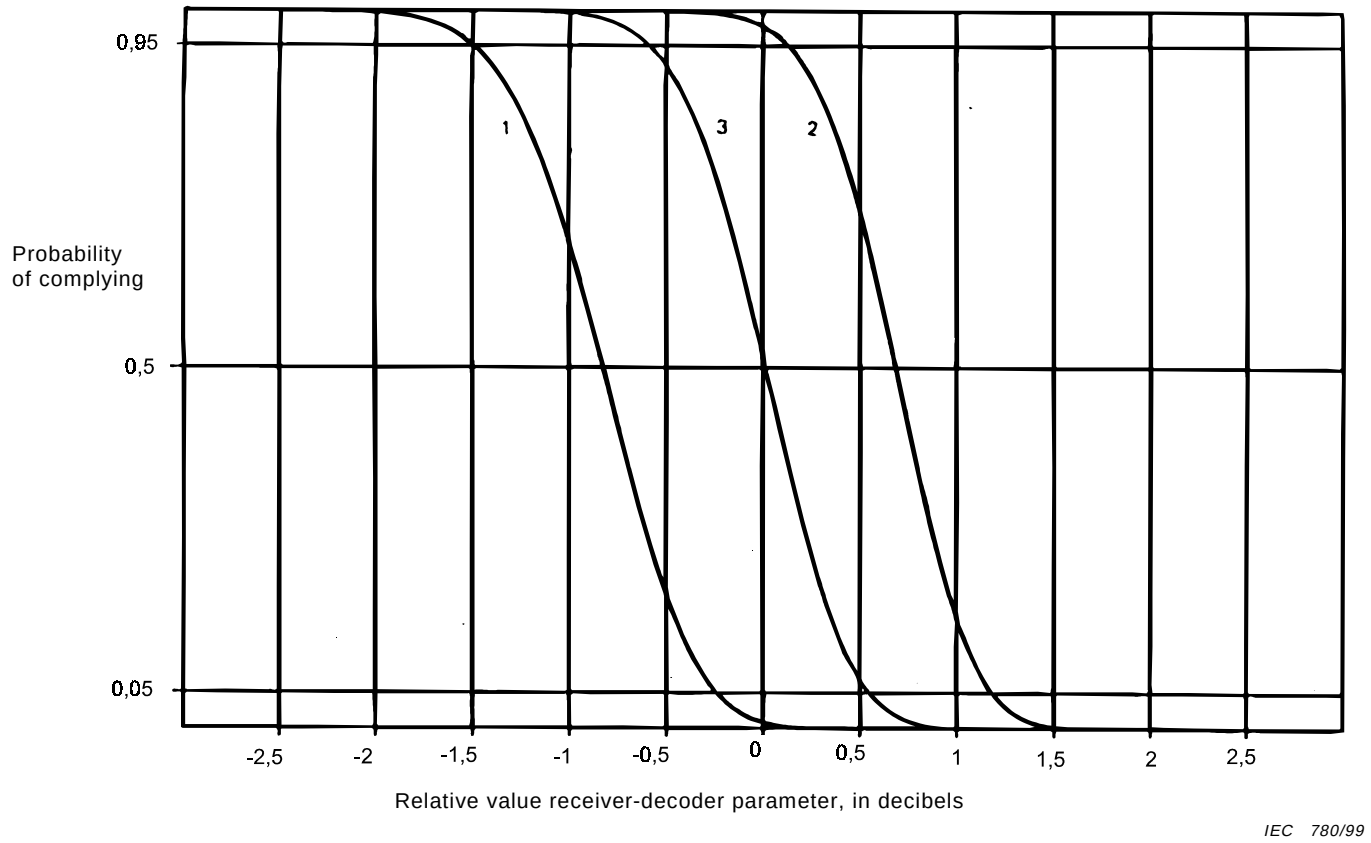

Figure E.16 – Risk curve for degradation – Character string

Copyright International Electrotechnical Commission
Provided by IHS under license with IEC
No reproduction or networking permitted without license from IHS
Not for Resale

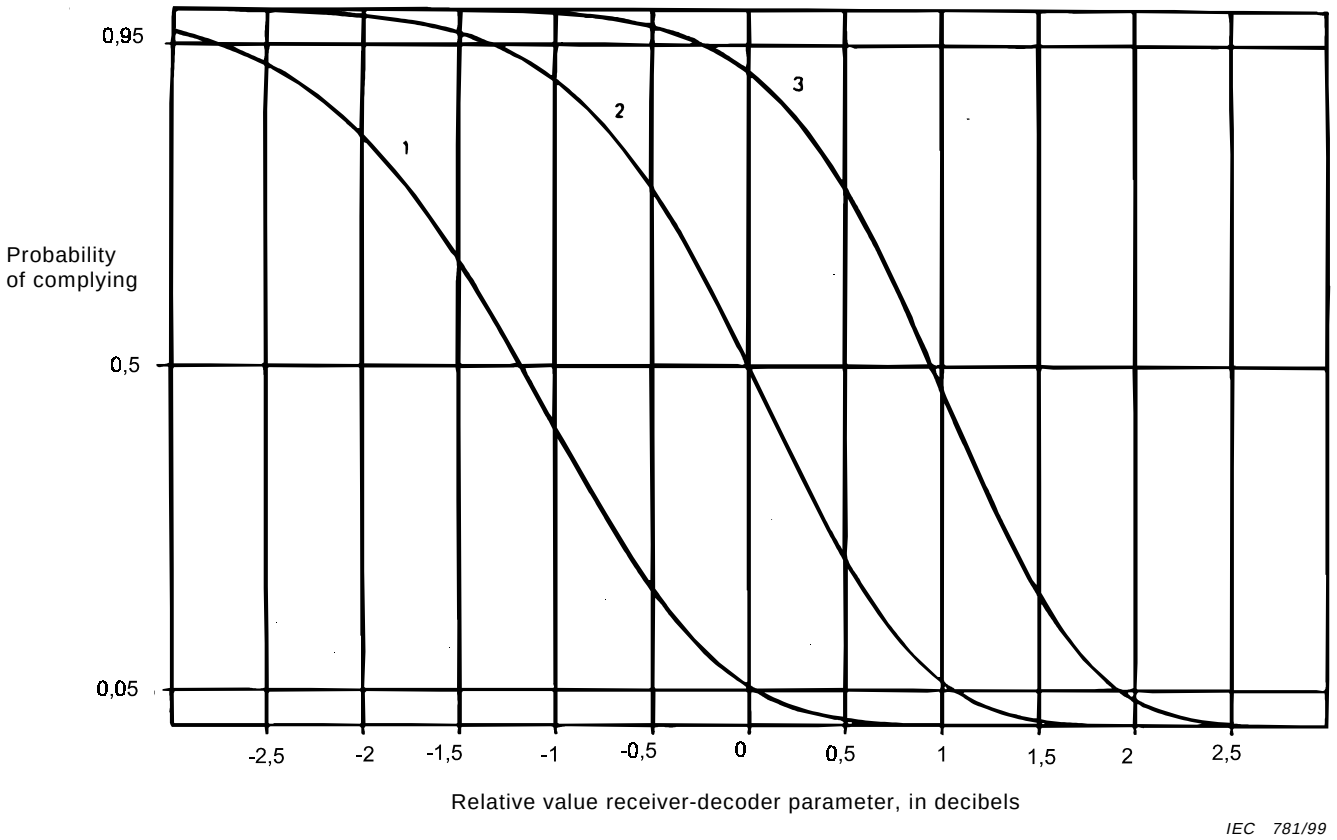

Figure E.17 – Risk curve for degradation – Message

Copyright International Electrotechnical Commission
Provided by IHS under license with IEC
No reproduction or networking permitted without license from IHS
Not for Resale

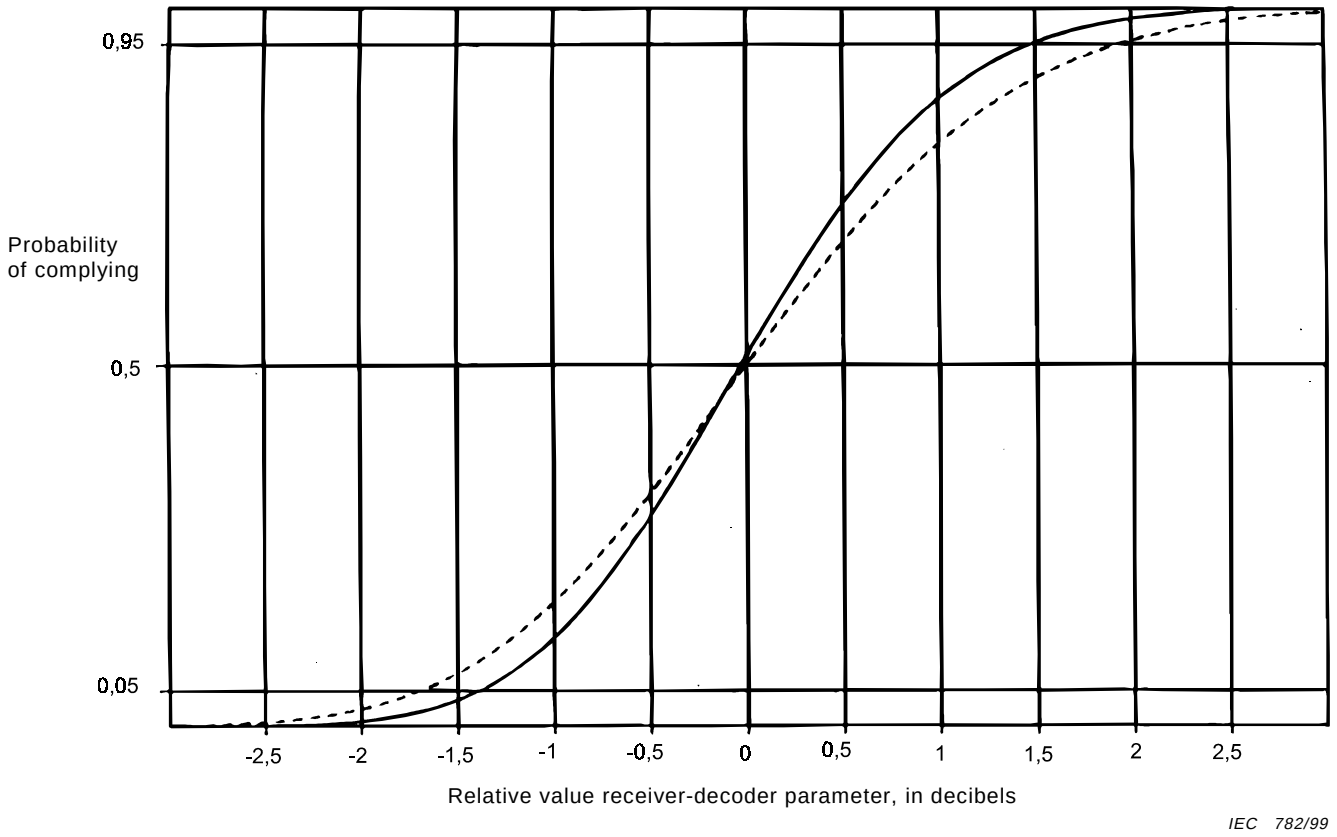

Figure E.18 – Risk curve for fading – Bit stream, character string and message

Annex F
(normative)

Mean time between false calling responses (*M*) (selective calling)

F.1 General

This standard assumes that time between false calling responses has an exponential distribution, and the estimate for *M* is given by the following formula:

$$M = \frac{\text{time for } n \text{ false calling responses to occur}}{n} \text{ in hours}$$

where *n* is the number of false calling responses.

Eight false calling responses have been selected for the noise falsing measurement in order to keep the span for this measurement within a usable value.

The cumulative probability distribution of the estimates of *M* that will be obtained when many measurements are made on the same equipment, as compared with the true value of *M* or the equipment, can be described by the chi-squared distribution where 2*n* is the number of degrees of freedom. From the chi-squared table for 16 degrees of freedom, it is determined that 95 % of the estimates for *M* obtained by this measurement will be 0,5 or more times the true value of *M*, and also that 95 % of the estimates for *M* will be 1,64 or less times the true value of *M.* Therefore, 90 % of the estimates for *M* will be between 0,5 and 1,64 times the true value of *M*, and this is the span of this measurement.

Since the estimate of *M* has the chi-squared distribution, the total time to make the measurement also has this type of distribution. Therefore, 90 % of the measurements will require a total time of between 3,98 and 13,15 times the value of *M* of the equipment being measured.

The measurement should not be specified if it is impractical to measure the equipment for this length of time. If it can be assumed that various different items of equipment have the same value of *M*, this measurement can be made using all these items of equipment simultaneously. The measurement is made until a total of eight false calling responses has occurred, and the time is the sum of the times of each of the different equipment.

F.2 Probability of falsing

The probability of a given number of false calling responses occurring in a specified period of time can be calculated using the following formula:

$$P(t) = \frac{(t\ /\ M)^n}{n!}\, e^{-(t/M)}$$

where

t is the specified period of time;

n is the given number of false calling responses.

--`,,`,,`-`-`,,`,,`,`,,`---

Copyright International Electrotechnical Commission
Provided by IHS under license with IEC
No reproduction or networking permitted without license from IHS Not for Resale

The value of *M* used will be the estimate of *M* obtained from the measurement. The magnitude of the span of the value of *M* has been discussed. When the estimate of *M* is used to estimate the probability of a given number of false calling responses occurring in a specified period, the effect of the span of *M* should be considered. The effect can be very large when the probability is small.

F.3 Discussion of the compliance tests

In any compliance test there is a risk that the test will given a wrong decision. The compliance tests designed by those who will receive or certify equipment will be such that, if the equipment performance is a little worse than the specified limit, there will be a high probability of failure. On the other hand, the manufacturer would like to see the test designed so that there is a high probability of passing the test if the equipment is a little better than the specification limits.

In an attempt to meet both requirements, the compliance tests in this standard are designed so that if a receiver-decoder has a mean time between false calling responses that exactly matches the specification, there will be a 50 % probability that it will pass and a 50 % probability that it will fail the compliance test. This is the principle of shared risk.

The design goal for these tests is to have a 95 % probability of the equipment failing the test if it has an *M* that is one half of the specified value, and a 95 % probability of passing the test if it has an *M* of twice the specified value.

For the type of compliance test used in this standard, the probability of a receiver-decoder passing the test is a function of the ratio *R*, the actual receiver-decoder *M* to the specified value, and is given by:

$$P_{(\text{passing})} = \sum_{i=0}^{i=8} (8{,}67 / R)^{i} \exp(-8{,}67 / R) / i!$$

where

$P_{(\text{passing})}$ is the probability of passing the compliance test;

R is the ratio of the equipment M to the specified value.

When the above equation is plotted it is called a risk curve and it is shown in figure F.1.

When *R* is either small or large, some time can be saved by truncating the test using the following rules. Where *T* is the total time that the test has run measured in the same units as *M*, and *F* is the number of false calling responses observed during the time *T*:

– stop the test and pass the equipment if *T* is greater than 3 + *F*,

– stop the test and fail the equipment if *F* is greater than 3 + *T*.

The modified risk curve is shown by the points in figure F.1. The data points were obtained by simulation.

Copyright International Electrotechnical Commission
Provided by IHS under license with IEC
No reproduction or networking permitted without license from IHS Not for Resale

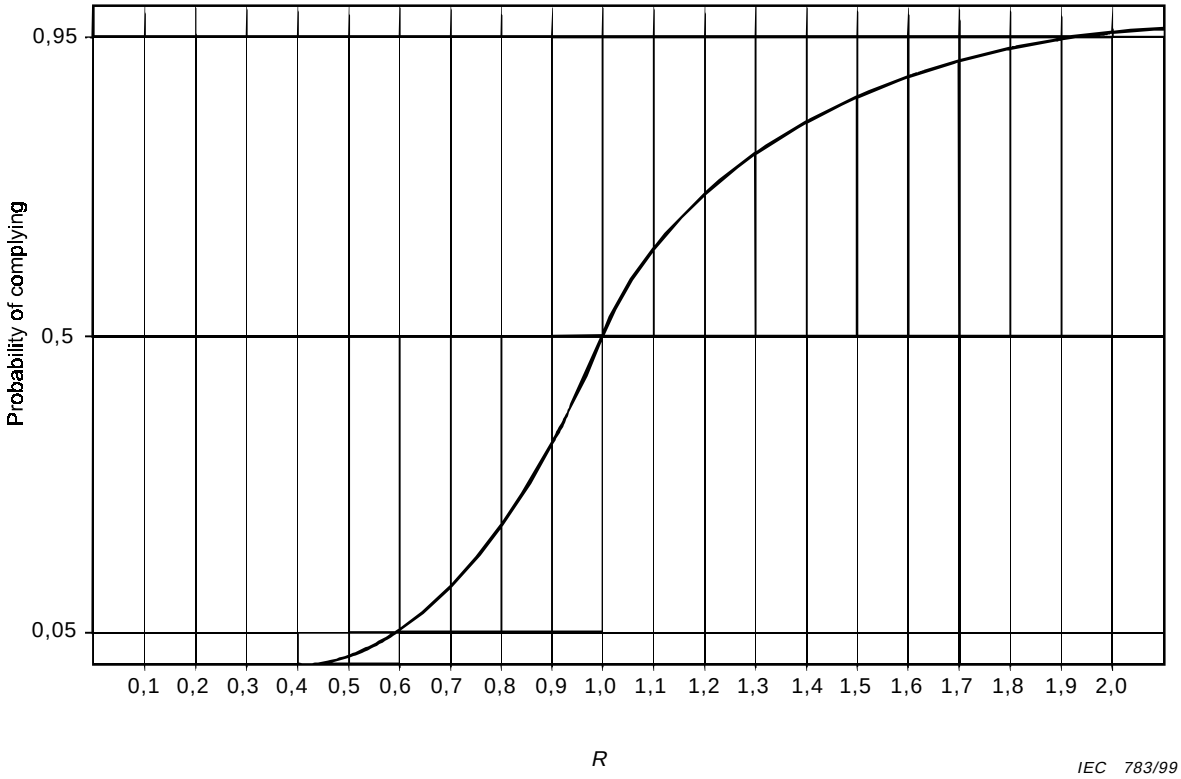

R: the ratio of the receiver-decoder false calling response to the specified false calling response.

Figure F.1 – Risk curve – False responses due to noise (selective calling)

Copyright International Electrotechnical Commission
Provided by IHS under license with IEC
No reproduction or networking permitted without license from IHS
Not for Resale

Annex G
(normative)

General information on impulsive noise and random impulse generator

G.1 General

One of the major sources of impulsive interference in receivers and decoders used in the mobile services is the ignition systems of internal-combustion engines. The noise radiated by ignition systems is characterized by a great number of pulses of various amplitudes and spacings. The number of pulses per time unit exceeding a given value and measured in a given frequency band forms part of the spectrum signature of a noise environment.

The complete noise-amplitude distribution cannot be generated easily for the purpose of evaluating receiver performance. A random impulse generator can, however, be used to simulate the noise produced by city traffic. This has been found to be an effective method of measuring degradation of receiver performance due to impulsive noise.

G.2 Random impulse generator characteristics

A block diagram of an example of a random impulse generator is shown in figure G.1.

The random impulse generators used in the measurements in this standard are of the pulsed carrier type.

G.2.1 Spectrum bandwidth

The output spectrum should be uniform, within 0,5 dB, over the radio-frequency bandwidth of the receiver being measured.

The spectrum amplitude for an individual carrier pulse shall be uniform, within 0,5 dB, up to a radio-input-signal-frequency f (in MHz), of $\pm 186/\tau$, where τ is the duration of the equivalent rectangular pulse in nanoseconds. The pulse duration of the generator is an important factor to consider when determining the offset of the carrier frequency from the nominal frequency of the receiver.

G.2.2 Output

The output of a random impulse generator is in spectrum amplitude. The spectrum amplitude produced by impulsive noise within a given frequency band is the vector sum of the voltage within that frequency band, divided by the bandwidth; it is expressed, for example, in μV/MHz or dB(μV)/MHz.

NOTE – When the output is observed on a wide-band oscilloscope, it will be a series of short pulses of the carrier. When observed on a narrow bandwidth spectrum analyser, it will be a (sin x)/x type frequency distribution.

The random impulse generator should be calibrated in dB(μV)/MHz with an accuracy of ±1 dB, and have a source impedance (R_i) equal to the impedance of the receiver (e.g. 50 Ω), including the matching and combining network. The output is a voltage measured across a test load of 50 Ω.

G.2.3 Average impulse rate

The random impulse generator should have an average impulse rate of 100 impulses per second (i/s).

Copyright International Electrotechnical Commission
Provided by IHS under license with IEC
No reproduction or networking permitted without license from IHS Not for Resale

G.2.4 Random distribution of impulses

The time interval between impulses is random. The distribution of the impulses is given by a Poisson distribution.

One way to generate a satisfactory random distribution is to apply to an “and circuit” the output of three pseudo-random binary sequence pattern generators having lengths of 20, 21 and 22 bits, clocked at 800 bits per second. The output of the “and circuit” is used to trigger the impulse. The average impulse rate shall be 100 i/s and the probability density shall closely approximate that of a Poisson distribution.

G.2.5 Random distribution of the spectrum amplitude and amplitude correlation

The amplitude of each carrier pulse is random. The probability density is given by a log-normal distribution that has a standard deviation of 6 dB. The amplitude correlation between carrier pulses is defined as that produced by band-limited noise of 10 Hz bandwidth.

One way to generate a satisfactory random amplitude distribution is to pass flat noise through a low-pass filter with a 10 Hz cut-off frequency. The probability density of this noise shall have a normal distribution. It is used to modulate the amplitude of the carrier pulses using a modulator that has an exponential characteristic. The standard deviation of the log-normal amplitude distribution can be varied by adjusting the magnitude of the noise applied to the modulator.

G.3 Calibration on the spectrum amplitude

a) Connect the output of the random impulse generator to a test load and connect an oscilloscope to measure the voltage across the test load.

b) Set the frequency of the radio-frequency signal generator to the nominal frequency of the receiver to be measured.

c) Adjust the controls of the random impulse generator to the following values:

   – attenuator to its minimum value;

   – pulse width to 0,2 μs;

   – standard deviation to 0 dB;

   – pulse rate to a constant (if possible).

   NOTE – Most oscilloscopes will be triggered by an impulse even if the impulses occur at random.

   Record the attenuation value.

d) With the oscilloscope adjusted to display one pulsed carrier impulse, measure the peak voltage of the impulse. Record the peak voltage in microvolts.

e) Measure the time between the two points where the envelope of the impulse crosses the level that is 50 % of the value recorded in step d). Record the time in microseconds.

f) Calculate the spectrum amplitude of the impulsive noise as follows:

$$S = \frac{\tau V}{\sqrt{2}} \left(\frac{\mu V}{MHz} \right)$$

where

S is the spectrum amplitude in μV/MHz;

V is the voltage recorded in step d) in μV;

τ is the time period recorded in step e) in μs.

This formula is valid only for that part of the frequency band in which the spectrum amplitude can be considered constant.

Copyright International Electrotechnical Commission
Provided by IHS under license with IEC
No reproduction or networking permitted without license from IHS Not for Resale

NOTE – An impulse of 0,2 μs duration will have a frequency distribution that is constant over a bandwidth of ±0,93 MHz.

Record the spectrum amplitude as the minimum attenuation median spectrum amplitude.

G.4 Performance verification of the random impulse generator

This verification applies to the pulse distribution and the amplitude distribution.

G.4.1 Verification that the pulse distribution is Poisson

G.4.1.1 Method of measurement

a) Connect the equipment as illustrated in figure G.2.

b) Adjust the controls of the random impulse generator as follows:
   - attenuator to its minimum value;
   - pulse width to 0,2 μs;
   - standard deviation to 0 dB;
   - pulse rate to random.

c) Adjust the counter to measure the number of impulses that occur within a 0,1 s period. Measure 1 000 periods at random and record in table G.1 the number of periods where 5, 6, 7... or 15 pulses occurred.

G.4.1.2 Presentation of results

If the number of periods recorded in table G.1 is within the specified limits, record that the random impulse generator complies with this standard for the pulse distribution.

G.4.2 Verification that the amplitude distribution is log-normal

G.4.2.1 Method of measurement

a) Adjust the random impulse generator to a standard deviation of 0 dB.

b) Apply the radio-frequency output signal to an envelope detector with a logarithmic characteristic (e.g. a spectrum analyser), set to zero scan mode and set to a decibel scale. Record V, the pulse amplitude, in decibels.

c) Adjust the random impulse generator to a standard deviation of 6 dB.

d) Measure and record the amplitude, in decibels, of 1 000 independent samples of the pulse amplitude. Take the samples at a rate of about one per second.

G.4.2.2 Presentation of results

a) For each sample i, calculate Z

$$Z_i = X_i - V \text{ in decibels}$$

where

V is the amplitude recorded in step b) of G.4.2.1;

X_i is the amplitude recorded in step d) of G.4.2.1.

b) Record in table G.2 the number of samples that have a value of Z that is less than the values indicated.

c) If the number of samples recorded in table G.2 is within the specified limits, record that the random impulse generator complies with this standard for the log-normal amplitude distribution.

Copyright International Electrotechnical Commission
Provided by IHS under license with IEC
No reproduction or networking permitted without license from IHS Not for Resale

Table G.1 – Performance verification sheet (Poisson distribution)

Number of pulses per period	Lower limit	Measured (number of periods)	Upper limit
5	30		46
6	50		74
7	72		109
8	90		136
9	100		151
10	100		151
11	90		137
12	75		114
13	58		88
14	41		63
15	27		42

Table G.2 – Performance verification sheet (log-normal distribution)

Z (dB) (less than)	Lower limit	Measured (number of periods)	Upper limit
–15	1		13
–14	2		19
–13	6		27
–12	10		38
–11	18		52
–10	28		71
–9	42		95
–8	62		125
–7	86		162
–6	117		205
–5	155		254
–4	200		309
–3	251		370
–2	307		434
–1	434		500
0	500		566
1	566		631
2	630		693
3	691		749
4	746		800
5	795		845
6	838		883
7	875		914
8	905		938
9	929		953
10	948		972
11	962		982
12	973		990
13	973		994
14	981		998
15	987		999

--`,,`,,`,,`,,`---

Copyright International Electrotechnical Commission
Provided by IHS under license with IEC
No reproduction or networking permitted without license from IHS Not for Resale

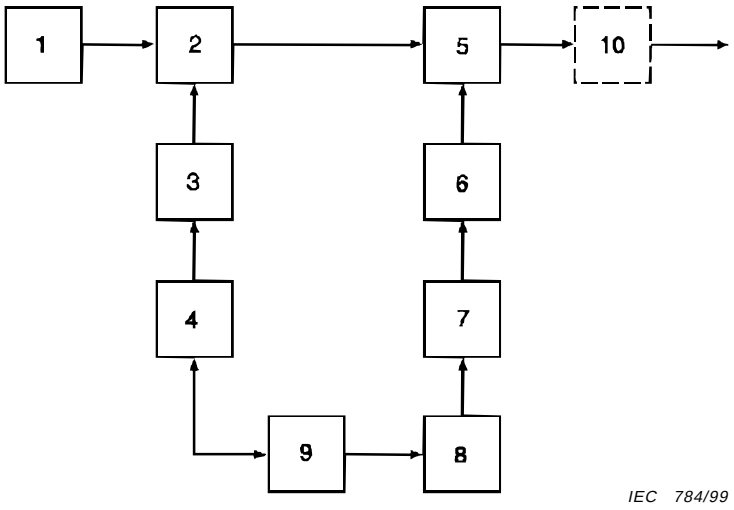

Key
1 Radio-frequency signal generator
2 Product modulator
3 Impulse generator
4 Poisson distribution generator
5 Exponential modulation
6 Gain adjustment
7 Low-pass filter
8 Noise generator
9 Clock
10 Internal attenuator

Figure G.1 – Example of a random impulse generator

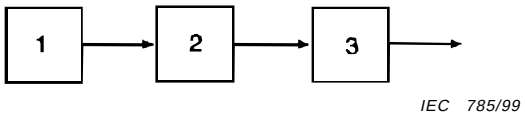

Key
1 Random impulse generator
2 Envelope detector
3 Frequency counter

Figure G.2 – Measuring arrangement for measurement of impulse distribution

Copyright International Electrotechnical Commission
Provided by IHS under license with IEC
No reproduction or networking permitted without license from IHS Not for Resale

G.5 References

[1] “Impulsive Noise Simulator for Land Mobile Radio Communication”. K. Kobayashi, T. Hattori. Trans. IECE 1979/10 Vol. 62-B, No. 10, pp. 925-931. Transactions of the IECE of Japan, Vol. F62, No. 10 Abstracts.

[2] “Impulsive Noise Simulator Type INS 81A”. Micro Control Systems Limited, 102 Lower Guildford Road, Knaphill, Woking, Surrey, GV21 2EP, England.

[3] “City Noise Simulator NJZ-317”. Japan Radio Co., Ltd. Mori Building 5th. 17-1, Toranomon 1 chome, Minato-ku, tokyo 105, Japan.

[4] *IEEE Standard for the Measurement of Impulse Strength and Impulse Bandwidth*. IEEE Std 376-1975. Institute of Electrical and Electronics Engineers, Inc., 345 East 47 Street, New York, N.Y. 10017, USA.

Copyright International Electrotechnical Commission
Provided by IHS under license with IEC
No reproduction or networking permitted without license from IHS Not for Resale

Annex H
(informative)

Example of a mains power line impedance stabilization network

H.1 Introduction

A mains power line impedance stabilization network is required to provide defined impedances at high frequencies between the mains terminals of the receiver and between each of these terminals and earth. The network also provides a suitable filter to isolate the receiver circuit from unwanted radio-frequency voltages that may be present on the supply mains.

The impedance of this filter section at the measuring frequency shall be sufficiently high for the combination of filter and associated network as represented in figure H.1, to give an impedance having a modulus of 150 Ω ± 20 Ω and a phase angle not exceeding 20, both between the terminals of the receiver and between these two terminals connected together and earth.

The symmetrical voltage is the voltage appearing between terminals A and B (see figure H.1).

The asymmetrical voltage is the voltage appearing between terminal C and the earth (see figure H.1).

These voltages may be represented in a theoretical vector diagram as indicated in figure H.2.

H.2 Method of measuring interference voltage

For practical measurements, a mains power line impedance stabilization network (also known as artificial mains network), similar to the example given in figure H.3, may be used. This network is suitable for measuring both symmetrical (position 1 of switch S) and asymmetrical (position 2 of switch S) components, with an unbalanced selective voltmeter.

Copyright International Electrotechnical Commission
Provided by IHS under license with IEC
No reproduction or networking permitted without license from IHS Not for Resale

Table H.1 – Example

Resistance, attenuation and impedance values of the artificial mains network of figure H.3 (note 1) for three different input impedances *Z*, of the measuring equipment			
	Z = 50 Ω	Z = 60 Ω	Z = 75 Ω
Resistance (note 2)			
$R_1 = R_2$	118,7 (120) Ω	112,2 (110) Ω	107,1 (110) Ω
$R_3 = R_5$	152,9 (150) Ω	169,7 (160) Ω	187,5 (180) Ω
R_4	390,7 (390) Ω	483,9 (470) Ω	621,4 (620) Ω
$R_6 = R_7$	275,7 (270) Ω	230,3 (220) Ω	187,5 (180) Ω
$R_8 = R_9$	22,8 (22) Ω	27,6 (27) Ω	34,5 (36) Ω
$R_{10} = R_{11}$	107,8 (110) Ω	129,1 (130) Ω	161,3 (150) Ω
R_{12}	(50) Ω	(60) Ω	(75) Ω
Attenuation (note 3)			
Symmetrical A_{sym}	20 (20) dB	20 (19,7) dB	20 (19,8) dB
Asymmetrical A_{asym}	20 (19,9) dB	20 (19,8) dB	20 (20) dB
Artificial mains network impedance (note 3)			
Symmetrical Z_{sym}	150 (150) Ω	150 (145,7) Ω	150 (151,2) Ω
Asymmetrical Z_{asym}	150 (150) Ω	150 (143,4) Ω	150 (145,2) Ω

NOTE 1 – The ratio of turns of the balanced to unbalanced transformer in figure H.3 is assumed to be $\sqrt{\frac{2,5}{1}}$ with centre tap.

NOTE 2 – Resistance values shown in brackets are the nearest preferred values (tolerance ±5 %).

NOTE 3 – Values shown in brackets are calculated using preferred resistance values nearest to the theoretical values.

Allowance should be made for the attenuation introduced by this network. For all pertinent values, refer to figure H.3 and table H.1 in this annex.

An additional filter section may be required to prevent unwanted radio-frequency signals, carried by the mains power line network, from significantly influencing the measurements.

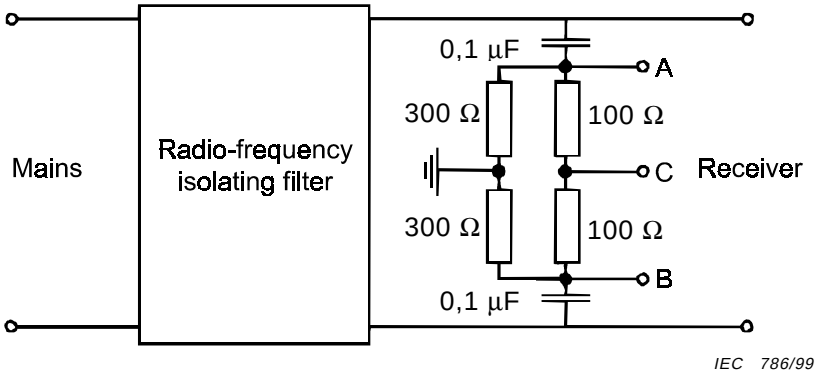

Figure H.1 – Mains power line impedance stabilization network (also known as artificial mains network)

Copyright International Electrotechnical Commission
Provided by IHS under license with IEC
No reproduction or networking permitted without license from IHS Not for Resale

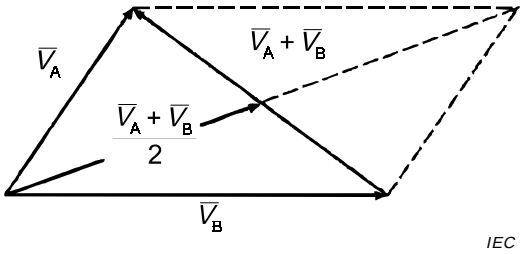

Figure H.2 – Vector diagram of interference voltages

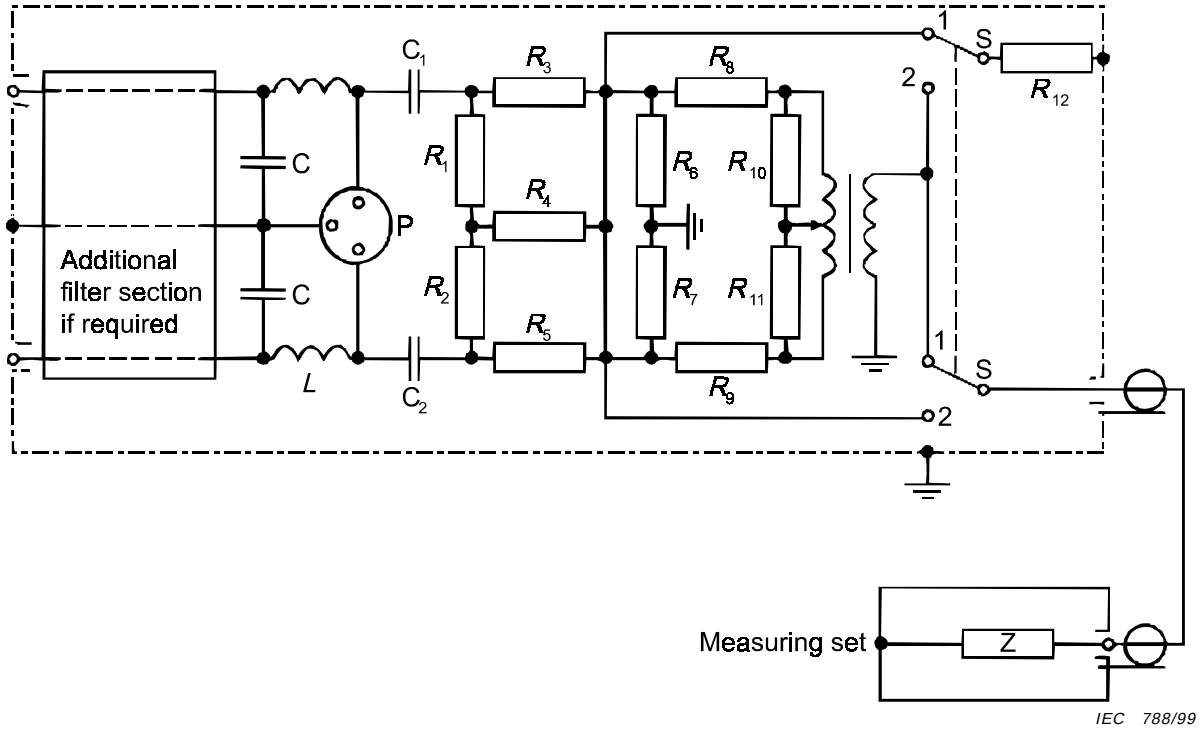

Key
P Connections for receiver
1 Symmetrical component
2 Asymmetrical component

Figure H.3 – Example of a mains power line impedance stabilization network

--`,,`,,`-`-`,,`,,`,`,,`---

Copyright International Electrotechnical Commission
Provided by IHS under license with IEC
No reproduction or networking permitted without license from IHS Not for Resale

Annex I
(informative)

Measuring error of the occupied bandwidth centre frequency using spectrum analyser

The measuring error of the occupied bandwidth (OBW) centre frequency using a digital spectrum analyser comes mainly from the marker display error and power calculation error.

I.1 Marker error

The marker frequency display error is expressed in the following equation:

$$dfm = dfo + \frac{m \times SPAN \times K}{N}$$

where

dfm is the centre frequency display error;

m is a distance between the marker and the centre frequency in the sample point unit;

N is the number of total sample points;

SPAN is the swept frequency bandwidth;

K is the swept frequency bandwidth accuracy;

$$dfo = (1/r) \times SPAN + D$$

where

r is the internal resolution of the digital spectrum analyser;

D is one count of the internal frequency counter of the analyser.

Parameters, N = 1 000, K = 5 %, r = 2 000, D = 20 Hz are typical for present digital spectrum analysers.

If the *SPAN* = 20 kHz, OBW = 4 kHz (N = 100), *dfm* becomes 130 Hz. K can be improved to 1 %, then *dfm* will be reduced to 50 Hz.

I.2 Power calculation error

OBW measurement is based on the calculation of power. In the summation process of signal power spectrum, OBW measurement error occurs when the frequency band, where calculation is carried out, includes noise spectrum.

When the spectrum on the display is indicated in figure I.1, the A % ratio of noise-to-signal power becomes

$$A = \frac{P_n \times (N - n)}{P_S \times n} \times 100$$

If N = 1 000, n = 200 and A = 1 %, then P_s/P_n = 400. This means that at least 26 dBc is required when the OBW is 20 % of the display screen (calculation bandwidth).

Copyright International Electrotechnical Commission
Provided by IHS under license with IEC
No reproduction or networking permitted without license from IHS Not for Resale

Averaging is one of the most powerful techniques for improving the measurement accuracy of the OBW centre frequency even further. A mere 20 Hz deviation from the unmodulated carrier obtained is in the OBW centre frequency measurement by averaging 16 measured data for a 920 MHz carrier, modulated by a pseudo-random bits sequence.

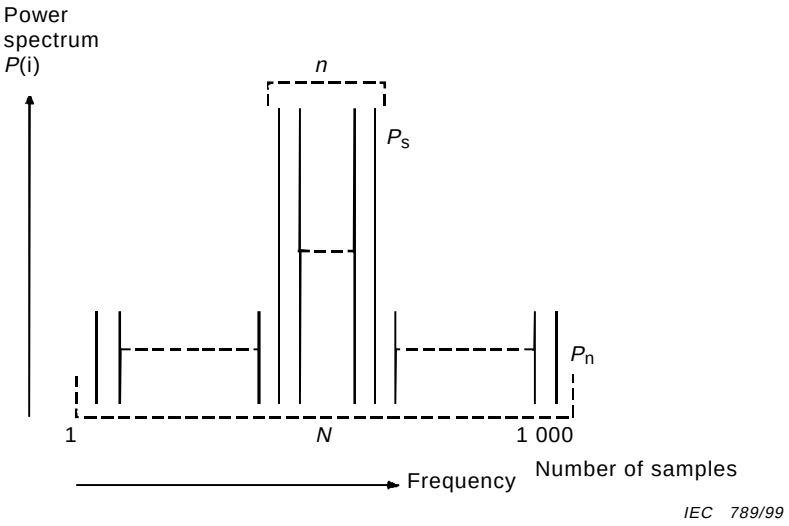

Figure I.1 – Example of displayed power spectrum

Copyright International Electrotechnical Commission
Provided by IHS under license with IEC
No reproduction or networking permitted without license from IHS Not for Resale

Standards Survey

The IEC would like to offer you the best quality standards possible. To make sure that we continue to meet your needs, your feedback is essential. Would you please take a minute to answer the questions overleaf and fax them to us at +41 22 919 03 00 or mail them to the address below. Thank you!

Customer Service Centre (CSC)

International Electrotechnical Commission
3, rue de Varembé
1211 Genève 20
Switzerland

or

Fax to: **IEC**/CSC at +41 22 919 03 00

Thank you for your contribution to the standards-making process.

A Prioritaire

Nicht frankieren
Ne pas affranchir

Non affrancare
No stamp required

RÉPONSE PAYÉE

SUISSE

Customer Service Centre (CSC)
International Electrotechnical Commission
3, rue de Varembé
1211 GENEVA 20
Switzerland

Copyright International Electrotechnical Commission
Provided by IHS under license with IEC
No reproduction or networking permitted without license from IHS
Not for Resale

Q1 Please report on **ONE STANDARD** and **ONE STANDARD ONLY**. Enter the exact number of the standard: *(e.g. 60601-1-1)*

.....

Q2 Please tell us in what capacity(ies) you bought the standard *(tick all that apply).* I am the/a:

purchasing agent ❑
librarian ❑
researcher ❑
design engineer ❑
safety engineer ❑
testing engineer ❑
marketing specialist ❑
other.....

Q3 I work for/in/as a: *(tick all that apply)*

manufacturing ❑
consultant ❑
government ❑
test/certification facility ❑
public utility ❑
education ❑
military ❑
other.....

Q4 This standard will be used for: *(tick all that apply)*

general reference ❑
product research ❑
product design/development ❑
specifications ❑
tenders ❑
quality assessment ❑
certification ❑
technical documentation ❑
thesis ❑
manufacturing ❑
other.....

Q5 This standard meets my needs: *(tick one)*

not at all ❑
nearly ❑
fairly well ❑
exactly ❑

Q6 If you ticked NOT AT ALL in Question 5 the reason is: *(tick all that apply)*

standard is out of date ❑
standard is incomplete ❑
standard is too academic ❑
standard is too superficial ❑
title is misleading ❑
I made the wrong choice ❑
other .....

Q7 Please assess the standard in the following categories, using the numbers:
(1) unacceptable,
(2) below average,
(3) average,
(4) above average,
(5) exceptional,
(6) not applicable

timeliness.....
quality of writing.....
technical contents.....
logic of arrangement of contents .....
tables, charts, graphs, figures.....
other .....

Q8 I read/use the: *(tick one)*

French text only ❑
English text only ❑
both English and French texts ❑

Q9 Please share any comment on any aspect of the IEC that you would like us to know:

.....
.....
.....
.....
.....
.....
.....
.....
.....
.....
.....
.....

Copyright International Electrotechnical Commission
Provided by IHS under license with IEC
No reproduction or networking permitted without license from IHS
Not for Resale

Copyright International Electrotechnical Commission
Provided by IHS under license with IEC
No reproduction or networking permitted without license from IHS
Not for Resale

ISBN 2-8318-4831-8



ICS 33.060.20; 33.060.30

Typeset and printed by the IEC Central Office
GENEVA, SWITZERLAND

Copyright International Electrotechnical Commission
Provided by IHS under license with IEC
No reproduction or networking permitted without license from IHS

Not for Resale