INTERNATIONAL STANDARD

IEC 60489-1

1983

AMENDMENT 2
1999-05

Amendment 2

Methods of measurement for radio equipment used in the mobile services –

Part 1: General definitions and standard conditions of measurement

Amendement 2

Méthodes de mesure applicables au matériel de radiocommunication utilisé dans les services mobiles –

Partie 1: Définitions générales et conditions normales de mesure

© IEC 1999 — Copyright - all rights reserved

International Electrotechnical Commission 3, rue de Varembé Geneva, Switzerland
Telefax: +41 22 919 0300 e-mail: inmail@iec.ch IEC web site http://www.iec.ch

Commission Electrotechnique Internationale
International Electrotechnical Commission
Международная Электротехническая Комиссия

PRICE CODE U

For price, see current catalogue

Copyright International Electrotechnical Commission
Provided by IHS under license with IEC
No reproduction or networking permitted without license from IHS

Not for Resale

FOREWORD

This amendment has been prepared by IEC technical committee 102: Equipment used in radio communications for mobile services and for satellite communication systems.

The text of this amendment is based on

FDIS	Report on voting
102/41/FDIS	102/49/RVD

Full information on the voting for the approval of this amendment can be found in the report on voting indicated in the above table.

A bilingual version of this amendment may be issued at a later date.

Add the following reference to the list of "Other IEC publications quoted in this standard":

IEC 60489-8:1984, *Methods of measurement for radio equipment used in the mobile services – Part 8: Antennas*

Page 54

Add the following Annex A after figure 3.

Annex A
(normative)

Guide for the use of test sites and radio-frequency coupling devices (RFCDs)

A.1 General

Test sites are basic means to perform radiation measurements. Radio-frequency coupling devices (RFCDs) are means generally designed to perform many equipment radiation measurements economically, using the same measuring method as equipment with antenna terminals.

This annex describes low reflection test sites (LRTS) and anechoic chambers (AC) for upper frequency limit extension and interference-free measurements, as well as random field measurement sites for measurements similar in the real field and for measurement equipment with a diversity antenna. TEM cells and GTEM cells are also described for wideband upper-frequency limit extension and interference-free measurements.

The evaluation measurement of a test site is the method to judge whether a test site construction satisfies the required conditions and is introduced for LRTS, AC and RFM sites in this annex. The evaluation measurement for OATS was studied, but not introduced because the available evaluation measurement required important measurement condition changes.

Copyright International Electrotechnical Commission
Provided by IHS under license with IEC
No reproduction or networking permitted without license from IHS Not for Resale

The calibration method for a test site is the process for determining the numerical relationship between equipment radiation power and the observed output of a radio-frequency signal generator which replaces the EUT during the substitution measurement, or the numerical relationship between the field strength where the EUT is placed and the indication of the selective measuring device with the calibration antenna.

RFCDs were originally used only for ratio measurement of equipment receiving radio-frequency electromagnetic energy. The radiation sensitivity measured in the RFCD was called "the reference sensitivity (RFCD)" and defined as the level of RFCD input signal in microvolts (μV).

This annex also describes calibration methods. Calibration is the procedure for determining the numerical relationship between RFCD input or output voltage and the equivalent field strength where the EUT is placed, or the radiated power of the EUT. RFCDs should be principally calibrated. Therefore, RFCDs need no evaluation measurement.

Test site overview and overview of RFCDs are shown in tables A.1 and A.2 respectively.

Table A.1 – Test site overview

Test sites	Advantages	Disadvantages
OATS: Open area test site	Low construction cost Available for large size EUT Includes ground reflection effects	Needs a lot of space Interference from others Weather dependency Measurement fluctuation is relatively high at frequencies higher than 1 GHz
LRTS: Low reflection test site	Clear and flexible evaluation criterion Possible to reduce error Wide frequency range Available for large size EUT No influence of ground reflections	Does not reflect reality Is affected by absorber size Interference from others
AC: Anechoic chamber	No interference No weather dependency No influence of ground reflections	Limited lower frequency Limited EUT size Expensive, especially for low frequency
RFM: Random field measurement site	Few construction site requirements (anywhere) Evaluation of real world antenna efficiency Clear and flexible evaluation criterion Available for the evaluation of diversity antenna	Needs many measurement values and their calculation

Copyright International Electrotechnical Commission
Provided by IHS under license with IEC
No reproduction or networking permitted without license from IHS Not for Resale

Table A.2 – Overview of radio-frequency coupling devices (RFCDs)

RFCDs	Maximum size of EUT [mm]	Features
Narrowband RFCD Test fixture	---------- (Only for specific EUT)	Available in small size Not expensive Only for specific EUT Only for specific or approximate frequency
Wideband RFCDs		More than twice frequency range
Stripline arrangement	200 l x 200 b x 250 h for maximum frequency of 200 MHz 400 l x 400 b x 500 h for maximum frequency of 100 MHz	Can be constructed with detailed information Influence of surroundings Limited frequency range
TEM cell	100 l x 150 b x 50 h for maximum frequency of 500 MHz 200 l x 300 b x 100 h for maximum frequency of 250 MHz	No influence from surroundings Limited frequency range
GTEM cell	300 l x 300 b x 200 h to greater than 5 GHz or 1 000 l x 1 000 b x 500 h to greater than 5 GHz	No influence from surroundings Wide frequency range
NOTE – A certain manufacturer specifies d.c. to 17 GHz for the frequency range of a GTEM cell.		

A.1.1 Abbreviations:

AC Anechoic chamber
ETSI European Telecommunication Standards Institute
EUT Equipment under test
GTEM GHz TEM
LRTS Low reflection test site
OATS Open area test site
RFCD Radio-frequency coupling device
RFM Random field measurement
TEM Transverse electromagnetic mode

A.2 Test sites

A.2.1 Introduction, outline and selection of test sites

The radiation characteristics of equipment are measured at test sites. Both equipment emitting radio-frequency electromagnetic energy and equipment receiving it can be measured. Emission measurements can be made for all radio-frequency parameters pertaining to radiated radio-frequency electromagnetic energy, for example, transmitter radiated power, transmitter radiated spurious power, receiver radiated spurious power. Receiver measurements can be made for all radio-frequency parameters pertaining to received radio-frequency electromagnetic energy, for example, receiver radiation sensitivity.

OATSs are the classic test sites and have been left as before. ACs are already widely used, and the new evaluation measurement has been introduced. LRTS and RFM site are newly introduced test sites. Both LRTS and RFM sites have clear and flexible evaluation criteria which allow for easy appraisal of conformity to construction requirements.

Copyright International Electrotechnical Commission
Provided by IHS under license with IEC
No reproduction or networking permitted without license from IHS Not for Resale

All test sites use the substitution method for emission measurements and this reduces measurement error. The EUT is to be substituted with a half-wave dipole antenna and a radio-frequency signal generator. The field strength in receiver measurements is to be measured by the calibration antenna and the selective measuring device.

A guide for the selection of test sites is shown in table A.1.

A.2.2 Open area test site (OATS)

A.2.2.1 General

Open area test sites are applicable to all kinds of measurements on mobile radio equipment in areas where no interfering radio services are operating, and no other radio services may interfere with the propagation of the measuring frequencies power used on the test site. In other cases indoor test sites are recommended.

On an OATS, the measuring antenna or the calibration antenna receives the combination of a direct wave and a ground reflected wave. By contrast, the measuring antenna or the calibration antenna on the LRTS receives only a direct wave, while the ground reflection is suppressed.

Measuring distances of 3 m and 30 m are applied for OATS.

Emission measurements can be made on any measuring distance for all radio parameters concerning radiated electromagnetic energy, for example, transmitter radiated power, transmitter radiated spurious power, receiver radiated spurious power. The shorter measuring distance test site can measure low power. The longer one can measure a large size of EUT and lower frequency.

Receiver measurements can be made only on 30 m test site for all radio parameters concerning received electromagnetic energy, for example, receiver radiation sensitivity. The 3 m test site has great field gradient in higher frequencies.

A.2.2.2 Test site characteristics

Characteristics	Limits for a 3 m test site
Useful frequency range	100 MHz to 1 000 MHz
Nominal site attenuation	12 dB to 38 dB for 100 MHz
Nominal site attenuation	32 dB to 58 dB for 1 000 MHz
Equipment size limits	0,6 m maximum, including the antenna
NOTE – The nominal attenuation of the test site for a half-wave dipole is 18 dB for 100 MHz and 38 dB for 1 000 MHz. The actual attenuation may vary due to ground reflections.	

Characteristics	Limits for a 30 m test site
Useful frequency range	25 MHz to 1 000 MHz
Nominal site attenuation	20 dB to 46 dB for 25 MHz
Nominal site attenuation	52 dB to 78 dB for 1 000 MHz
Equipment size limits	6 m, including the antenna
NOTE – The nominal attenuation of the test site for a half-wave dipole is 26 dB for 25 MHz and 58 dB for 1 000 MHz. The actual attenuation may vary due to ground reflections.	

Copyright International Electrotechnical Commission
Provided by IHS under license with IEC
No reproduction or networking permitted without license from IHS Not for Resale

A.2.2.3 Basic measuring procedure

A.2.2.3.1 Transmitter emission measurements

a) Place the transmitter under test on the platform. Orientate the measuring antenna so that it has the same polarization as the transmitter. Orientate the transmitter so that an intended direction is perpendicular to the direction of the measuring antenna and operate the transmitter.

b) Tune the selective measuring device to the radiated power component.

c) Raise and lower the measuring antenna to obtain the maximum indication on the selective measuring device. Note the maximum indication.

d) Substitute the auxiliary antenna and the radio-frequency signal generator for the transmitter under test. Adjust the measuring antenna height to the maximum point where reading in the selective measuring device can be obtained.

e) Adjust or calculate the radio-frequency signal generator output level to the level obtained in step c). This level is the radiated power of the transmitter under test for an intended direction.

NOTE 1 – The selection of the measuring distance and the connection of the equipment in the test site are not included in the above steps.

NOTE 2 – The measuring antenna height in step c) and step d) may vary. The measuring antenna height in step c) for another intended direction may differ from the original.

A.2.2.3.2 Receiver measurement receiving radio-frequency electromagnetic energy

a) Calibrate the radio-frequency signal generator level to the electromagnetic field strength received by the calibration antenna and the selective measuring device. It should be confirmed that the transmitting antenna is less dependent upon small changes in antenna height before the calibration.

b) Replace the calibration antenna and the selective measuring device by a receiver under test. Orientate the receiver so that an intended direction is perpendicular to the direction of the transmitting antenna and operate the receiver.

c) Adjust the signal generator level to the level which just satisfies the receiver radiation sensitivity according to the sensitivity measurement procedure.

d) Read or calculate the average of signal generator level and convert it to the calibrated level. This level is the radiation sensitivity of the receiver in an intended direction.

NOTE – Connection of the equipment in the test site is not included in the above steps. The measuring distance is 30 m.

A.2.2.4 Construction of a radiation test site

The measuring arrangement for equipment emitting radio-frequency electromagnetic energy is shown in figure A.1. The measuring arrangement for equipment receiving electromagnetic energy is shown in figure A.2.

The radiation test site shall be on ground level having uniform electrical characteristics and being free from reflecting objects over an area as wide as possible, to ensure that the extraneous electromagnetic fields do not affect the accuracy and repeatability of the test results.

A.2.2.4.1 3 m test site

A continuous ground screen (either sheet metal or wire mesh having openings no greater than 10 mm, which should maintain good electrical contact between the wire) shall be used to establish a uniformly conducting earth over part of the test site. The turntable shall be metallic and shall be flush with the ground screen. The minimum ground screen area is shown in figure A.3.

Copyright International Electrotechnical Commission
Provided by IHS under license with IEC
No reproduction or networking permitted without license from IHS Not for Resale

A.2.2.4.2 30 m test site

The minimum boundary of the test site shall be an ellipse having a major axis equal to 60 m and a minor axis equal to 52 m. The EUT and the measuring antenna or the transmitting antenna shall be located at the foci.

No extraneous conducting objects having any dimensions in excess of 50 mm shall be in the immediate vicinity of either the EUT or the antennas.

The test site shall have a turntable and a support for the measuring antenna. The measuring distance is the distance in the horizontal plane between the central vertical axis of the turntable and the central vertical axis of the measuring antenna. A shelter may be provided for the whole or a part of the test site. All such constructions having any dimensions greater than 50 mm should be of wood, plastic, or other non-conducting material. Wood shall be impregnated to ensure minimum water absorption.

All test equipment, if located above ground, shall be powered preferably by batteries. If the equipment is powered by mains, each of the supply cables shall be provided with a suitable radio-frequency filter. The cable connecting the filter and the measuring equipment shall be as short as possible and shielded. The cable connecting the filter and mains shall either be shielded and grounded, or buried to a depth of approximately 300 mm.

A.2.2.5 Position of the EUT

The equipment with its cabinet or housing in which it is normally operated shall be placed on a horizontal platform, the upper side of which is 1,50 m above the ground. The platform and its support shall be made of non-conductive material.

For equipment with an integral antenna, the equipment shall be placed on the platform in a position which is closest to that in normal use.

Equipment having a rigid external antenna shall be mounted so that the antenna is in a vertical position. Equipment having a non-rigid external antenna shall be mounted vertically, using a non-conducting support.

It shall be possible to rotate the equipment around the central vertical axis of its antenna. It is recommended that a turntable, preferably remotely controlled, be used for this purpose. If the equipment has a power cord, it should extend down to the turntable, and any excess should be coiled on it.

For information on the use of alternative test mounting arrangements for equipment which is hand-carried or carried on a person in normal operation, see clause A.4.

A.2.2.6 Measuring antenna

The measuring antenna shall be suitable for the reception of linearly polarized waves. It may consist of a half-wave dipole, the length of which is adjusted for the frequency concerned. For practical reasons, however, to increase the sensitivity and to attenuate remaining reflections, a more complex antenna, having high directivity and broad bandwidth, is preferred. For low frequencies short dipoles are recommended.

The measuring antenna shall be mounted at the end of a horizontal boom supported by a vertical pole, both made of non-conducting materials. The boom shall project at least 1 m from the pole in the direction to the EUT and shall be arranged so that it may be raised and lowered from 1 m to 4 m. The mounting shall permit the antenna to be positioned for measuring both horizontal and vertical components of the electric field. The mount shall permit the antenna to be tilted so as to permit simultaneous inclusion of both the direct and reflected rays. The lower end of the antenna, when oriented for vertical polarization and placed at its lowest position, shall be at least 0,3 m above the ground.

Copyright International Electrotechnical Commission
Provided by IHS under license with IEC
No reproduction or networking permitted without license from IHS Not for Resale

The antenna cable shall be routed along the horizontal boom for at least 2 m, preferably at ground level. Suitable antenna clearance is recommended. Alternatively, the cable may be routed underground.

A.2.2.7 Transmitting antenna

The transmitting antenna shall be suitable for the radiation of linearly polarized waves. It may consist of a half-wave dipole, the length of which is adjusted for the frequency concerned. For practical reasons, however, to increase the sensitivity and to attenuate remaining reflections, a more complex antenna having high directivity and broad bandwidth is preferred. For low frequencies short dipoles are recommended.

The transmitting antenna shall be mounted at the end of a horizontal boom supported by a vertical pole, both made of non-conducting material. The boom shall project at least 1 m from the pole in the direction of the equipment under test and shall be arranged so that the centre of the antenna is 3 m ± 0,2 m above the ground. The mounting shall permit the antenna to be positioned for the same polarization as that of the receiver antenna.

The antenna cable shall be routed along the horizontal boom for at least 2 m, preferably at ground level. Suitable antenna clearance is recommended. Alternatively, the cable may be routed underground.

At some frequencies, an appreciable variation of signal level occurs for a small change in antenna height due to ground reflections. Where this occurs, the transmitting antenna should be moved up or down by an amount that will place the antenna in a region of small height sensitivity and make the test site calibration less dependent upon small changes in antenna position.

A.2.2.8 Auxiliary antenna

The auxiliary antenna substitutes for the equipment under test during calibration. The auxiliary antenna shall be a half-wave dipole and shall be arranged in a manner similar to that of the measuring antenna, except that the centre of the auxiliary antenna should coincide approximately with the normal position of the centre of radiation of the equipment under test. A broadband antenna also may be used as the substitution antenna.

At frequencies below about 60 MHz, the above condition may be impossible to achieve for vertical polarization. In this case, the lower end of the antenna should be placed 0,3 m above the ground, and the EUT shall be positioned to satisfy the above listed conditions.

A.2.2.9 Calibration antenna

The calibration antenna replaces the EUT during calibration of the receiver receiving electromagnetic energy measurement. The calibration antenna shall be an antenna for which the available power output has been calibrated in field strength. The centre of the calibration antenna is located so that this point coincides with the centre of the radiation centre of the EUT.

The antenna, including the cable, shall be matched to the input impedance of the selective measuring device.

At frequencies below about 60 MHz, the above condition may be impossible to achieve when the antenna is arranged for vertical polarization. In this case, the lower end of the antenna should be placed 0,3 m above the ground and the EUT shall be positioned to satisfy the above conditions.

--`,,```,,,,````-`-`,,`,,`,`,,`---

Copyright International Electrotechnical Commission
Provided by IHS under license with IEC
No reproduction or networking permitted without license from IHS Not for Resale

A.2.2.10 Radio-frequency signal generator

A well-shielded radio-frequency signal generator, with a matching or combining network (if required) and its associated output cable, shall be placed so that it will not affect the accuracy of the results, and shall be connected to and matched to the auxiliary antenna.

A.2.2.11 Selective measuring device

The selective measuring device should be a calibrated field strength meter or a spectrum analyzer (with preselector), and shall be placed, together with its associated input cable, in a position where it will not affect the accuracy of the test results.

A.2.2.12 Calibration method for OATS

A.2.2.12.1 General

The test site calibration is the procedure for determining the numerical relationship between the EUT radiated power and the selective measuring device indication in an emission measurement site, or the field strength where the EUT is placed, and the radio-frequency signal generator equivalent output voltage in a receiver measurement site.

Measurement distance is not so important for the substitution method. Only the adjustment of the radiation centre of the EUT at the measurement distance to that of the auxiliary antenna for substitution is meaningful.

The radiation centre of the receivers is not recognized and the radiation centre of the calibration antenna may differ from that of the receivers. This means that the field strength measured by the calibration antenna might be different from the field strength at the radiation centre of the receivers.

A.2.2.12.2 Calibration for measurement of equipment emitting radio-frequency electromagnetic energy

This method is applicable to the radiated radio-frequency power of transmitters and the radiated spurious components of receivers.

a) Connect the equipment as illustrated in the chosen test site with the auxiliary antenna and the measurement antenna oriented to provide the polarization intended for the measurement.

b) Adjust the auxiliary antenna (if applicable) to the correct length for the frequency to be measured and adjust the frequency of the radio-frequency signal generator to the same frequency.

c) Adjust the measurement antenna (if applicable) to the correct length for the frequency to be measured and tune the selective measuring device to the operating frequency of the radio-frequency signal generator.

d) Adjust the output level of the radio-frequency signal generator to –10 dBm (103 dBμV).

e) Raise and lower the measuring antenna to obtain the maximum indication on the selective measuring device. Record the indication level of the selective measuring device.

f) The radiated radio-frequency power for other values of the selective measuring device indication is given by:

   radiated power = (new indication level in decibels (dB)) – (indication level in step e) in decibels (dB)) – 10 dBm

NOTE – The calibration is only valid for the frequency, antennas, polarization, and antenna position used in the calibration procedure. If any of these change, the site should be recalibrated.

Copyright International Electrotechnical Commission
Provided by IHS under license with IEC
No reproduction or networking permitted without license from IHS Not for Resale

A.2.2.12.3 Calibration for measurement of equipment receiving radio-frequency electromagnetic energy in a 30 m test site

a) Connect the equipment as illustrated in the chosen test site with the transmitting antenna and the calibration antenna oriented to provide the polarization intended for the receiver under test.

b) Adjust the frequency of the radio-frequency signal generator to the operating frequency of the receiver.

c) Adjust the calibration antenna (if applicable) to the correct length for the frequency to be measured and tune the selective measuring device to the operating frequency of the radio-frequency signal generator.

d) Adjust the output level of the radio-frequency signal generator to produce a reading of 100 µV/m (40 dBµV/m) on the selective measuring device. Record the output of the radio-frequency signal generator in microvolts.

e) The field strength for other values of the radio-frequency signal generator output is given by:

$$\text{field strength} = \frac{\text{new output level}}{\text{output level recorded in step d)}} \times 100\ \mu\text{V/m}$$

or

$$\text{field strength in dB}\mu\text{V/m} = 40 + 20\ \lg(\text{new output level in microvolts}) - 20\ \lg(\text{output level in microvolts recorded in step d}).$$

NOTE 1 – The calibration is only valid for the frequency, antennas, polarization, and antenna position used in the calibration procedure. If any of these change, the site should be recalibrated.

NOTE 2 – Measurement distance is not so important for the substitution method, but the radiation centre coincidence between calibration antenna and the receiver under test is very important because the radiation centre difference between them means a calibration error. To reduce this error, a longer measurement distance is recommended because it has a lesser degree of field strength variation than a shorter measurement distance. Especially at high frequency, this becomes severe, for example an 8 dB variation with 100 mm height difference is observed at 900 MHz at a measurement distance of 3 m. Therefore, a 3 m test site for equipment receiving radio-frequency electromagnetic energy is not recommended.

A.2.3 Low reflection test sites (LRTS, reduced ground reflections)

A.2.3.1 Introduction

The open area test sites (OATS) are widely used and popular test sites. Recently, upper frequency limitation improvement became necessary and some studies were made. One of the effective improvement methods is to suppress the ground-reflected waves. It also improves the measurement repeatability.

On an OATS, the measuring antenna or the calibration antenna receives the combination of a direct wave and a ground reflected wave. By contrast, the measuring antenna or the calibration antenna on the LRTS receives only a direct wave, while the ground reflection is suppressed.

The suppression of ground-reflected waves makes the characteristics of the test site similar to those of anechoic chambers and not to those of OATS.

LRTS have simple and clear evaluation criteria which can be adapted to any level of measuring error or repeatability requirements. LRTS require no specific construction requirements and can be applied to any measuring distance, for example, 3 m, 5 m, 10 m or 30 m.

For suppression of ground-reflected waves, use of a high directivity antenna and any other means are recommended. However, the quality of the construction is to be judged only by the evaluation criterion. (see A.2.3.4 and A.2.3.5)

NOTE – ETSI indoor test site is involved in LRTS. It requires a specific construction and a specific evaluation criterion.

Copyright International Electrotechnical Commission
Provided by IHS under license with IEC
No reproduction or networking permitted without license from IHS Not for Resale

A.2.3.2 Test site characteristics

Measuring distances of 3 m to 30 m can be used in combination with ground-reflected wave suppression described in A.2.3.4. Longer distance sites are unusual. Only the lowest frequency to be used and the largest dimension of the equipment under test require a longer measuring distance. LRTS characteristics are very similar to those of an anechoic chamber. The anechoic chamber can be used as an LRTS. The useful frequency range is extended to 18 GHz (depending on site performance).

As an example, a measuring distance of 3 m is shown below.

Characteristics	Limits for a distance of 3 m
Useful frequency range	100 MHz to 18 GHz
Nominal site attenuation	32 dB to 44 dB for 1 000 MHz
Equipment size limits	0,6 m maximum

A.2.3.3 Basic measuring procedure

A.2.3.3.1 Transmitter emission measurements

a) Place the transmitter under test on the platform. Orientate the measuring antenna so that it has the same polarization as the transmitter. Orientate the transmitter so that an intended direction is perpendicular to the direction of the measuring antenna and operate the transmitter.

b) Tune the selective measuring device to the radiated power component.

c) Raise and lower the measuring antenna around the same height as the transmitter under test, to obtain the maximum indication on the selective measuring device. Note the maximum indication.

d) Substitute the auxiliary antenna and the radio-frequency signal generator for the transmitter under test. Adjust the auxiliary antenna height to the maximum reading point in the selective measuring device.

e) Adjust or calculate the radio-frequency signal generator output level to the level obtained in step c). This level is the radiated power of the transmitter under test for an intended direction.

NOTE 1 – Selection of the measuring distance, connection of the equipment in the test site and the evaluation measurements are not included in the above steps.

NOTE 2 – The measuring antenna height, the transmitter radiation centre and the auxiliary antenna will be the same.

A.2.3.3.2 Receiver measurement receiving radio-frequency electromagnetic energy

a) Calibrate the radio-frequency signal generator level to the electromagnetic field strength received by the calibration antenna and the selective measuring device.

b) Replace the calibration antenna and the selective measuring device by a receiver under test. Orientate the receiver so that an intended direction is perpendicular to the direction of the transmitting antenna and operate the receiver.

c) Adjust the signal generator level to the level which just satisfies the receiver radiation sensitivity according to the sensitivity measurement procedure.

d) Read or calculate the average of the signal generator level and convert it to the calibrated level. This level is the radiation sensitivity of the receiver in an intended direction.

NOTE – Selection of the measuring distance, connection of the equipment in the test site and the evaluation measurements are not included in the above steps.

Copyright International Electrotechnical Commission
Provided by IHS under license with IEC
No reproduction or networking permitted without license from IHS Not for Resale

A.2.3.4 Construction of a radiation test site

The measuring arrangement for equipment emitting radio-frequency electromagnetic energy is shown in figure A.4. The measuring arrangement for equipment receiving electromagnetic energy is shown in figure A.5.

For the ground reflected wave suppression, use of a high directivity antenna and any of the measures in figure A.6 are suggested.

If a radio-wave screening curtain is used for the suppression of ground-reflected waves, the height of the curtain should be adjusted to be the optimum clearance as shown in figure A.6a. The optimum clearance will be 80 % to 100 % of the first Fresnel zone, which is calculated by the following formula. The output of the measuring antenna or the calibration antenna becomes a maximum at the optimum clearance.

$$H_0 = \sqrt{\frac{d_1 d_2}{d_1 + d_2}}$$

If a radio-wave absorber is used for the suppression of the ground-reflected wave, the width of the absorber area projected circle on the perpendicular plane to the ground-reflected wave path should be more than the circle with the same radius as the first Fresnel zone (see figure A.6d).

The other side area of the high directive measuring antenna or transmitting antenna should be as wide as possible to avoid extraneous reflected waves.

No extraneous conducting objects shall be in the immediate vicinity of either the equipment under test or antennas. It is also not recommended to use high permittivity dielectric in the immediate vicinity of either the equipment under test or the antennas. It may affect field distribution in the 800 MHz band or a higher frequency band.

The extraneous reflected waves increase the standing wave ratio in the evaluation measurement and this means an increase of the measurement error.

The test site shall have a turntable. The measuring distance is not critical in substituting a measurement if the centre of the equipment under test and the centre of the measuring antenna are placed in the same position.

A.2.3.5 Evaluation measurements

The evaluation measurement is the procedure to judge whether the test site construction satisfies the required conditions.

The reflected waves cause standing waves. The ratio value in decibels (dB) between a peak and an adjacent valley measured field strength means the maximum measuring value variation in decibels (dB). The maximum value measured in the volume of EUT is to be the maximum measuring error or the repeatability of the test site. The standing waves should be measured at least in two directions, in the three perpendicular directions of the measuring antenna or the calibration antenna. Measurement should be made by moving the measuring antenna or the calibration antenna continuously.

The length of the standing-wave measurement should be greater than the size of the EUT or a half-wave length, whichever is longer. The centre of the standing-wave measurement should be almost the same point to the radiation centre of the EUT.

Any value of the evaluation criterion could be used if both the purchaser and the manufacturer agree. However, ±1 dB to ±3 dB would be realistic.

Copyright International Electrotechnical Commission
Provided by IHS under license with IEC
No reproduction or networking permitted without license from IHS Not for Resale

A.2.3.6 Position of the EUT

The position of the EUT is recommended to be as high as possible because the higher position makes larger incident angle difference between the ground-reflected wave and the direct wave. Consequently, the received power of the ground-reflected wave is reduced by the increased directivity of the measuring antenna. The higher position also increases the propagation loss of the ground-reflected wave which reduces the power of the reflected wave.

Some examples of higher positions are shown in figure A.7.

The equipment in the cabinet or housing in which it normally operates shall be placed on a platform. The platform and its support shall be made of non-conducting materials. Equipment having an integral antenna shall be placed on the platform in a position which is closest to its normal use. If dielectric material is used for supporting the stand position of the equipment, low permittivity material is recommended.

It shall be possible to rotate the equipment about the vertical axis through the centre of the antenna of the EUT. It is recommended that a platform in the form of a turntable, preferably remotely controlled, should be used for this purpose. If the equipment has a power cable, it should extend down the turntable.

For information on the use of alternative test mounting arrangements on this test site for equipment which is hand-carried or carried on a person while in normal operation, see clause A.4.

A.2.3.7 Measuring antenna

The measuring antenna shall be suitable for the reception of linearly polarized waves and shall be a high directive antenna for suppressing the receiving power of the ground-reflected wave and other extraneous reflected waves.

The mounting shall permit the antenna to be positioned for measuring both horizontal and vertical components of the electric field.

NOTE – EUT is generally designed for vertical polarization. However, it may have other stronger polarizations in higher frequency spurious components.

A.2.3.8 Transmitting antenna

The transmitting antenna shall be the same as the measuring antenna except that the transmitting antenna height and direction shall be adjusted so that the received power of the calibration antenna becomes maximum.

A.2.3.9 Auxiliary antenna

The auxiliary antenna replaces the EUT during part of the emission measurement. The auxiliary antenna shall be a half-wave dipole (see A.7.1).

The auxiliary antenna height shall be adjusted so that the received power of the measuring antenna becomes maximum after the measuring antenna height has been adjusted to the maximum point of the received power from the EUT. This procedure makes the radiation centre of the auxiliary antenna coincide with the radiation centre of the equipment under test.

A.2.3.10 Calibration antenna

The calibration antenna replaces the equipment under test during calibration of the receiver receiving electromagnetic energy measurement. The calibration antenna shall be an antenna for which the available power output has been calibrated in field strength. The centre of the calibration antenna shall be located so that this point coincides with the centre of the radiation centre of the EUT. The antenna, including the cable, shall be matched to the input impedance of the selective measuring device.

Copyright International Electrotechnical Commission
Provided by IHS under license with IEC
No reproduction or networking permitted without license from IHS Not for Resale

A.2.3.11 Calibration method for LRTS

A.2.3.11.1 General

The test site calibration is the procedure for determining the numerical relationship between EUT radiated power and the selective measuring device indication in an emission measurement site, or the field strength where the EUT is placed and the radio-frequency signal generator equivalent output voltage in a receiver measurement site.

The measurement distance is not so important for the substitution method. Only the adjustment of the radiation centre of the EUT at the measurement distance to that of the calibration antenna for substitution is meaningful.

Radiation measurement directions in a vertical plane are almost always horizontal and may differ from that of an OATS or an AC with ground plane.

A.2.3.11.2 Calibration for measurement of equipment emitting radio-frequency electromagnetic energy

This method is applicable to the radiated radio-frequency power of transmitters and the radiated spurious components of receivers.

a) Connect the equipment as illustrated in the chosen test site with the auxiliary antenna and the measurement antenna oriented to provide the polarization intended for the measurement.

b) Adjust the auxiliary antenna (if applicable) to the correct length for the frequency to be measured and adjust the frequency of the radio-frequency signal generator to the same frequency.

c) Adjust the measurement antenna (if applicable) to the correct length for the frequency to be measured and tune the selective measuring device to the operating frequency of the radio-frequency signal generator.

d) Adjust the output level of the radio-frequency signal generator to –10 dBm (103 dBμV).

e) Raise and lower, for example ±0,3 m, the measuring antenna to obtain the maximum indication on the selective measuring device. Record the indication level of the selective measuring device. The same height to the auxiliary antenna may be acceptable if the above indication shows flatness or very little variation.

f) The radiated radio-frequency power for other values of the selective measuring device indication is given by:

   radiated power = (new indication level in decibels (dB)) – (indication level in step e) in decibels (dB)) – 10 dBm

NOTE – Calibration is only valid for frequency, antennas, polarization, and the antenna position used in the calibration procedure. If any of these change, the site should be recalibrated.

A.2.3.11.3 Calibration for measurement of equipment receiving radio-frequency electromagnetic energy

a) Connect the equipment as illustrated in the chosen test site with the transmitting antenna and the calibration antenna oriented to provide the polarization intended for the receiver under test.

b) Adjust the frequency of the radio-frequency signal generator to the operating frequency of the receiver.

c) Adjust the calibration antenna (if applicable) to the correct length for the frequency to be measured and tune the selective measuring device to the operating frequency of the radio-frequency signal generator.

Copyright International Electrotechnical Commission
Provided by IHS under license with IEC
No reproduction or networking permitted without license from IHS Not for Resale

d) Raise and lower, for example ±0,3 m, the calibration antenna to obtain the maximum indication on the selective measuring device. The same height to the auxiliary antenna may be acceptable if the indication shows flatness or very little variation.

e) Adjust the output level of the radio-frequency signal generator to produce a reading of 100 µV/m (40 dBµV/m) on the selective measuring device. Record the output of the radio-frequency signal generator in microvolts (µV).

f) The field strength for other values of the radio-frequency signal generator output is given by

$$\text{field strength} = \frac{\text{new output level}}{\text{output level recorded in step e)}} \times 100 \ \mu\text{V/m}$$

or

field strength in dBµV/m = 40 + 20 lg (new output level in microvolts (µV))
−20 lg (output level in microvolts (µV) recorded in step e))

NOTE – Calibration is only valid for frequency, antennas, polarization, and the antenna position used in the calibration procedure. If any of these change, the site should be recalibrated.

A.2.4 Anechoic chamber

A.2.4.1 General

The anechoic chamber is a well-shielded chamber which allows disturbing influences on the measurements from outside to be avoided.

All inside surfaces are covered by electromagnetic absorption material which suppresses reflections and simulates free-space conditions. However, the suppressing of reflections is limited in reality by the frequency or the room to be used.

A.2.4.2 Characteristics of an anechoic chamber

Example of an anechoic chamber with the dimensions of 5 m x 5 m x 10 m.

Characteristics	Limits for a 10 m chamber
Useful frequency range	100 MHz to above 1 000 MHz
Useful measuring distance	3 m to 5 m
Nominal site attenuation	5 m distance and 100 MHz 26 dB
Nominal site attenuation	5 m distance and 1 000 MHz 46 dB
Minimum shielding attenuation	100 dB
Minimum return loss of absorbers	10 dB
Maximum equipment size	1 m

A.2.4.3 Basic measuring procedure

The basic measuring procedure of the anechoic chamber is the same as that of the LRTSs (see A.2.3.3).

A.2.4.4 Example of the construction of an anechoic chamber

An example of a chamber with dimensions of 5 m x 5 m x 10 m, which is shown in figure A.8, has internal room dimensions of 3 m x 3 m x 8 m, so that a maximum measuring distance of 5 m in the middle axis of the room is available. The chamber consists of shielded walls, ceiling and floor. The ceiling and walls of the chamber are coated with about 1 m high pyramid absorbers. The floor can be covered with floor absorbers which can be walked on. The ground reflections need not be considered and the antenna height has basically no influence on the results.

Copyright International Electrotechnical Commission
Provided by IHS under license with IEC
No reproduction or networking permitted without license from IHS Not for Resale

All measuring results therefore can be checked by simple calculations and the measuring tolerances are as small as possible. When planning an anechoic chamber, two parameters are very important: shielding loss and return loss. Shielding loss is the capability of the chamber to attenuate radiated r.f. energy. The attenuation depends on the material and the construction of the chamber and is normally specified by the manufacturer.

The return loss is a measure of its ability to suppress reflections and standing waves. The value of the return loss depends on the material, the geometrical shape and the dimensions of the absorbers applied.

Typical values of pyramid-shaped absorbers with a base of 600 mm × 600 mm and a height of 600 mm are 5 dB to 8 dB return loss. The attenuation varies, for example, with the height and material of the absorber and the frequencies, as well as the installation practice.

The measuring arrangement for equipment emitting radio-frequency electromagnetic energy and for equipment receiving electromagnetic energy are the same as those of the LRTSs shown in figure A.4 and figure A.5 respectively.

A.2.4.5 Evaluation measurements

To meet the proposed specification, it is necessary to measure the quality of the anechoic chamber which depends especially on the wall influences of the mounted chamber. The evaluation measurement is the procedure to judge whether the test site construction satisfies the required conditions.

The reflected waves cause standing waves. The ratio value in decibels between a peak and an adjacent valley measured field strength means the maximum measuring value variation in decibels. The maximum value measured in the volume of the equipment under test (EUT) is to be the maximum measuring error or the repeatability of the test site. The standing waves should be measured at least in two directions, in the three perpendicular directions of the measuring antenna or the calibration antenna. The measurement should be made by moving the measuring antenna or the calibration antenna continuously. The length of the standing wave measurement should be greater than the size of the EUT or a half-wave length, whichever is longer. The centre of the standing wave measurement should be almost the same point to the radiation centre of the EUT.

Any value of the evaluation criterion may be used if both the purchaser and the manufacturer agree. However, ±1 dB to ±3 dB would be realistic.

A.2.4.6 Position of the equipment under test

The EUT shall be placed on a horizontal platform, the upper side of which is 1,5 m above the floor. Other heights may be used. However, the position of the EUT should be separated as long as possible from the walls, the ceiling and the floor to reduce the reflected waves. The platform and its support shall be made of non-conducting material. Equipment having an integral antenna shall be placed on the platform in a position which is closest to its normal use. Equipment having a rigid antenna shall be mounted so that the antenna is in the vertical position.

Equipment having a non-rigid external integral antenna shall be mounted vertically with a non-conducting support. It shall be possible to rotate the equipment around the vertical axis through the centre of the antenna. It is recommended that a turntable, preferably remotely controlled, shall be used for this purpose. If the equipment has a power cord, it should extend down to the turntable, and any excess should be coiled onto the turntable.

For information about the use of alternative test mounting arrangements for equipment which is hand carried or carried on a person while in normal operation, see clause A.4.

Copyright International Electrotechnical Commission
Provided by IHS under license with IEC
No reproduction or networking permitted without license from IHS Not for Resale

A.2.4.7 Measuring antenna support

The measuring antenna shall consist of a horizontal boom supported by a vertical mast, both made of non-conducting materials. The boom shall be placed at least 1 m from the vertical mast in the direction of the EUT. The mounting shall permit the antenna to be positioned for measuring both horizontal and vertical components of the electrical field. The height of the antenna shall be adjustable.

A.2.4.8 Measuring antenna

The measuring antenna shall be suitable for the reception of linear polarized waves. It normally may consist of a half-wave dipole, which is adjusted for the frequency concerned. To increase the sensitivity of the measurements and to attenuate possible wall reflections, it may be preferable to use a number of separate fixed broadband dipoles or more complex antennas.

The measuring antenna shall be mounted at the end of a horizontal boom. The lower end of the antenna, when oriented for vertical polarization and placed in its lowest position, shall be at least 0,25 m above the floor.

The cable from the antenna shall be routed along the horizontal boom and preferably preferably leave the chamber in the same direction through the wall, before it is connected to the selective measuring device, placed in a separate shielded cabinet. Alternatively, the cable may be routed beneath the ground absorbers.

A.2.4.9 Transmitting antenna

The transmitting antenna shall be the same as the measuring antenna, except that the transmitting antenna height and direction shall be adjusted so that the received power of the calibration antenna becomes maximum.

A.2.4.10 Auxiliary antenna

The auxiliary antenna replaces the EUT during calibration. It shall be a half-wave dipole arranged in a manner similar to that of the measuring antenna, except that the centre of the auxiliary antenna should coincide approximately with the normal position of the centre of the EUT. At frequencies below about 100 MHz, the above condition may be impossible to achieve when the antenna is arranged for vertical polarization. In this case, the lower end of the antenna should be placed 0,25 m above the ground and the equipment under test shall be positioned to satisfy the above conditions.

A.2.4.11 Calibration antenna

The calibration antenna replaces the EUT during calibration of the receiver receiving electromagnetic energy measurement. The calibration antenna shall be an antenna for which the available power output has been calibrated in field strength. The centre of the calibration antenna will be located so that this point coincides with the centre of the radiation centre of the EUT. The antenna, including the cable, shall be matched to the input impedance of the selective measuring device.

A.2.4.12 Radio-frequency signal generator

A radio-frequency signal generator, with a matching or combining network (if required) and its associated output cable, shall be placed in a position so that it will not affect the accuracy of the results, and shall be connected to and matched to the auxiliary antenna.

A.2.4.13 Selective measuring device

The selective measuring device may be either a calibrated field strength meter or a spectrum analyzer and shall be placed, together with its associated input cable, in a position so that it shall not affect the accuracy of the test results.

Copyright International Electrotechnical Commission
Provided by IHS under license with IEC
No reproduction or networking permitted without license from IHS Not for Resale

A.2.4.14 Calibration method for an anechoic chamber

The calibration method for an anechoic chamber is the same as that for the LRTSs (see A.2.3.11).

A.2.5 Random field measurement (RFM) site

A.2.5.1 General

RFM came from the measurement of relative antenna efficiency in urban surroundings. The relative antenna efficiency can be obtained by averaging the signal levels received while an operator with a transmitter walks along a selected route (random path). When the mean level obtained from a reference antenna on the same route is known, the relative efficiency of the unknown antenna will then be equal to the ratio between the mean levels. Instead of measuring the mean levels directly, it is also possible to measure the percentage of the time a given signal level had been exceeded and find the relative efficiency by the number of decibels by which the system loss shall be increased or reduced in order to obtain the same probability of coverage with the two antennas.

The RFM site would be normally installed in a room with radio wave scatters, obstacles and measuring arrangement or transmitting arrangement so that an antenna moves along the random path.

Radio waves from a transmitter under test, for example, would be scattered to all directions so that the measuring antenna receives not only one direction but many directions from the transmitter.

A.2.5.2 Characteristics of the RFM site

Useful frequency range 30 MHz to 3 000 MHz

Only the size of the test site limits the lower useful frequency range.

Site attenuation 40 dB to 90 dB

NOTE – On this test site the actual value of the attenuation depends on the distance of the two antennas and the arrangement of the scattering materials and obstacles. The nominal site attenuation is based on the use of a half-wave dipole.

Size of equipment limits None

NOTE – The equipment to be tested must be surrounded with the radio wave scatterers. The distance between the two antennas needs to be great enough considering the size of the equipment.

Use of simulated hand Allowed

Site environment Either indoor or outdoor operation.

NOTE 1 – No special precautions are necessary to eliminate reflections from outside the test site, if they are constant.

NOTE 2 – Receiver characteristics measurement for data, for example radiation sensitivity (random field), in this test site become the measurement under multipath propagation conditions induced by random path movement. Only available random path movement velocity can be measured.

A.2.5.3 Basic measuring procedure

A.2.5.3.1 Transmitter emission measurements

a) Place the auxiliary antenna in a first horizontal direction and adjust the output level of the radio-frequency signal generator to *D* dBm (about –10 dBm, but may be changed according to the received level distribution in the dynamic range of the selective measuring device).

Copyright International Electrotechnical Commission
Provided by IHS under license with IEC
No reproduction or networking permitted without license from IHS Not for Resale

b) Move the measuring antenna from the beginning to the end of the random path in 360 or more approximately equally spaced positions and record the output values of the selective measuring device in dBμV for each position. Determine the median of the above values.

c) Place the auxiliary antenna in a second horizontal direction, which is perpendicular to the first direction, and repeat step b).

d) Place the auxiliary antenna in a third vertical direction, which is perpendicular to the first and second direction, and repeat step b).

e) Replace the auxiliary antenna and the radio-frequency signal generator with a transmitter under test and operate the transmitter with an antenna. Repeat step b).

f) The radiated radio-frequency power (random field: P_{RFD}) of the transmitter is given by:

$P_{RFD} = D + A - B$ (dBm)

where

D is the output level of the signal generator in step a);

A is the median value of step e);

B is the averaged median value of steps b), c) and d).

NOTE 1 – Location and connection of the equipment in the test site are not included in the above steps.

NOTE 2 – The radiated radio-frequency power (random field: P_{RFD}) would be the integration of all direction radiated power and not the same as the radiated power measured in other test sites.

A.2.5.3.2 Receiver measurement receiving radio-frequency electromagnetic energy

a) Place the calibration antenna in a first horizontal direction and adjust the output level of the radio-frequency signal generator to D dBm (about −10 dBm, but this may be changed according to the received level distribution in the dynamic range of the selective measuring device).

b) Move the transmitting antenna from the beginning to the end of the random path in 360 or more approximately equally spaced positions and record the output values of the selective measuring device in dBμV for each position. Determine the median of the above measured values.

c) Place the calibration antenna in a second horizontal direction, which is perpendicular to the first direction, and repeat step b).

d) Place the calibration antenna in a third vertical direction, which is perpendicular to the first and second direction, and repeat step b).

e) Replace the calibration antenna and the selective measuring device with a receiver under test and operate the receiver.

f) Move the transmitting antenna from the beginning to the end of the random path in 360 or more approximately equally spaced positions and measure the receiver output signal-to-noise ratio in each position. Record the number of times N that the signal-to-noise ratio exceeds the standard signal-to-noise ratio (12 dB SINAD).

NOTE 1 – The receiver output could be connected directly to measuring equipment using carbon impregnated polytetrafluoroethylene (PTFE) wires or connected acoustically, using an acoustic coupling device. The squelch circuits output or the received signal strength indicator signal may be used instead of the receiver output. The data duplex equipment could retransmit the receiver output to measuring equipment through the transmitting part.

NOTE 2 – The sensitivity of some receivers as data receivers will require the measurement to be carried out under specified maximum Doppler frequencies or the specified velocities. The measuring antenna moving speed in the random path corresponds to the maximum Doppler frequency or the velocities. The antenna moving speed may not cover all of them.

NOTE 3 – SINAD is defined as $\frac{S+N+D}{N+D}$

g) If N is less than 72 increase the field strength level, record the output level of the radio-frequency signal generator, and repeat step f).

Copyright International Electrotechnical Commission
Provided by IHS under license with IEC
No reproduction or networking permitted without license from IHS Not for Resale

If N is greater than 252 decrease the field strength level, record the output level of the radio-frequency signal generator, and repeat step f).

h) Using the value of N recorded in step f), calculate C as follows:

$$C = 10 \lg \frac{\lg(0,5)}{\lg(N / 360)} \text{ dB}$$

NOTE – If a number other than 360 is used, 72, 252 and N should be changed proportionally to the number.

j) Record the radiation sensitivity (random field: R_{RFD}) in dB(μV/m) as given by:

$R_{RFD} = C + E - D + F$

where

D is the output level of the signal generator in step a);

E is the signal generator output level in step f);

F is the averaged median value of step b), c) and d).

NOTE 1 – Location and connection of the equipment in the test site are not included in the above steps.

NOTE 2 – Steps a) to d) can be omitted if the test site has been calibrated in the same frequency and the same conditions.

NOTE 3 – The radiation sensitivity (random field: R_{RFD}) is similar to the radiation sensitivity in the real world and not the same as the radiation sensitivity measured in other test sites.

A.2.5.4 Construction of an RFM site

The measuring arrangement for equipment emitting radio-frequency electromagnetic energy is shown in figure A.9. The measuring arrangement for equipment receiving electromagnetic energy is shown in figure A.10.

The radiation test site may be situated in any convenient location that will allow the movement of the measuring or transmitting antenna along the random path.

On this test site the r.f. signal of the EUT or the auxiliary antenna, coming from any direction, should be scattered and reflected on the route to the measuring antenna.

For equipment receiving radio-frequency electromagnetic energy, the same test site construction and the opposite propagation condition should be used.

A.2.5.4.1 Random path

The random path is a predetermined path that has a minimum path length of the value listed in the following table according to the aimed measuring error or repeatability. The random path should not have much difference of distance between the EUT and any point of the path.

A rotator assisted arrangement can realise a random path with good repeatability. The rotator assisted arrangement is built by a rotator, an arm and an arm rotator and is able to support the measuring antenna. The arrangement operates as follows: during the first rotation the arm is settled so that the measuring antenna is in a vertical position; in the second rotation the arm is rotated 15°; and during the next rotation a further 15°. Thus the inclination of the measuring antenna increases by steps of 15°. M rotations can increase the path length M times 3,1 m if the arm has a radius of 1 m.

The measuring antenna or the transmitting antenna could be moved by hand or carried by a person; however, in this case, the repeatability of the movement should be confirmed sometimes by an evaluation measurement.

Copyright International Electrotechnical Commission
Provided by IHS under license with IEC
No reproduction or networking permitted without license from IHS Not for Resale

The aimed error in the following table means 90 % possibility and the path lengths are introduced from the study of the relationship between the estimation error of cumulative probability distribution of received signal strength and the measurement time in a Rayleigh fading signal environment.

Aimed error (dB)	1	2	3
Path length (wavelength)	44	8,7	3,3

A.2.5.4.2 Radio-wave scatterers

The radio-wave scatterers should be composed of several hundred or more scatterers, which are electrically separated from each other. The scatterers should be made from metallic material and it would be preferable to form curved boards of slightly differing shapes. The size of the scatterers should be about a quarter of the wavelength of the centre frequency of the frequency range of the test site.

The auxiliary antenna or the equipment under test should be surrounded by the scatterers.

NOTE – An example of 1 000 scatters of A4 size and obstacles gave an average of 1 dB DDD values in the frequency range of 470 MHz to 2,6 GHz. DDD stands for the Deviation of receiving level Dependent on the antenna Directions.

A.2.5.4.3 Obstacles

The obstacles, using metallic walls or radio-wave screening curtains or something similar, should be arranged so that the radio-wave passed scatters cannot reach the measuring antenna without being reflected more than twice.

A.2.5.5 Evaluation measurement

After the installation of the RFM test site, it is necessary to make an evaluation measurement to confirm whether the test site satisfies the required measuring error or repeatability. The measurement should confirm the DDD value.

Any value of the evaluation criterion could be used if both the purchaser and the manufacturer agree.

A.2.5.5.1 Method of measurement to confirm the DDD value

a) Locate the measuring antenna on the random path and arrange the other equipment as illustrated in figure A.9.

b) Place the auxiliary antenna in a first horizontal direction.

c) Move the measuring antenna from the beginning to the end of the random path in 360 or more approximately equally spaced positions and record the output values of the selective measuring device in dBμV for each position.

d) Place the auxiliary antenna in a second horizontal direction, which is perpendicular to the first direction.

e) Repeat step c).

f) Place the auxiliary antenna in a third vertical direction, which is perpendicular to the first and second direction.

g) Repeat step c).

NOTE – The same procedure can be applied for figure A.10.

Copyright International Electrotechnical Commission
Provided by IHS under license with IEC
No reproduction or networking permitted without license from IHS Not for Resale

A.2.5.5.2 Representation of results

a) Record the input power of the auxiliary antenna.

b) Determine and record the mean of the values recorded in A 2.5.5.1 steps c), e) and g).

c) The maximum difference of the three means is the DDD value. It is the maximum measurement error of the test site at this frequency.

A.2.5.6 Measuring antenna

The measuring antenna may be any antenna that can receive linearly polarized waves. It may consist of a half-wave dipole, the length of which is adjusted to the frequency concerned.

A.2.5.7 Transmitting antenna

The transmitting antenna shall be the same type as the measuring antenna.

A.2.5.8 Auxiliary antenna

The auxiliary antenna is used for the evaluation measurement and replaces the EUT during part of the emission measurement. The auxiliary antenna shall be a half-wave dipole and shall be arranged so that the centre of the auxiliary antenna approximately coincides with the centre of radiation of the EUT.

A.2.5.9 Calibration antenna

The calibration antenna replaces the equipment under test during calibration of the receiver receiving electromagnetic energy measurement. The calibration antenna shall be an antenna for which the available power output has been calibrated in field strength. The centre of the calibration antenna shall be located so that this point coincides with the centre of the radiation centre of the equipment under test. The antenna, including the cable, shall be matched to the input impedance of the selective measuring device.

A.2.5.10 Radio-frequency signal generator

The generator shall be matched to the antenna, if necessary by use of a matching network (balun).

A.2.5.11 Selective measuring device

The selective measuring device may be a field strength meter or a selective voltmeter or a spectrum analyzer with an output proportional to the field strength, or the logarithm of the field strength over a range of 50 dB.

NOTE – Since the measurement requires that many measurements should be recorded, it will be more practical to have an electrical output from the selective measuring device that can automatically be recorded and processed by a computer.

A.2.5.12 Calibration method for RFM site

A.2.5.12.1 General

The RFM site calibration is the procedure for determining the numerical relationship between EUT effective radiated power and the selective measuring device indication mean value in an emission measurement site, or the field strength mean value where the EUT is placed and the radio-frequency signal generator equivalent output voltage in a receiver measurement site.

The calibration method contains the evaluation measurement because the calibration needs the averaged indication of three perpendicular directions of the auxiliary antenna or the calibration antenna.

Copyright International Electrotechnical Commission
Provided by IHS under license with IEC
No reproduction or networking permitted without license from IHS Not for Resale

A.2.5.12.2 Calibration for measurement of equipment emitting radio-frequency electromagnetic energy

This method is applicable to the radiated radio-frequency power of transmitters and the radiated spurious components of receivers.

a) Locate the measuring antenna on the random path and arrange the other equipment as illustrated in figure A.9.

b) Place the auxiliary antenna in a first horizontal direction.

c) Adjust the output level of the radio-frequency signal generator to D dBm (about –10 dBm, but may be changed according to the received level distribution in the dynamic range of the selective measuring device).

d) Move the measuring antenna from the beginning to the end of the random path in 360 or more approximately equally spaced positions and record the output values of the selective measuring device in dBμV for each position. Determine the median of the above values.

e) Place the auxiliary antenna in a second horizontal direction which is perpendicular to the first direction.

f) Repeat step d).

g) Place the auxiliary antenna in a third vertical direction which is perpendicular to the first and second direction.

h) Repeat step d).

i) The radiated radio-frequency power (random field: P_{RFD}) for other median values is given by:

$$P_{RFD} = D + A - B \text{ (dBm)}$$

where

D is the output level of the signal generator in step c);

A is the new median value;

B is the average median value of steps d), f) and h).

NOTE – Calibration is only valid for frequency, antennas, polarization and the antenna position used in the calibration procedure. If any of these change, the site should be recalibrated.

A.2.5.12.3 Calibration for measurement of equipment receiving radio-frequency electromagnetic energy

a) Locate the transmitting antenna on the random path and arrange the other equipment as illustrated in figure A.10.

b) Place the calibration antenna in a first horizontal direction.

c) Adjust the output level of the radio-frequency signal generator to D dBm (about –10 dBm, but may be changed according to the received level distribution in the dynamic range of the selective measuring device).

d) Move the transmitting antenna from the beginning to the end of the random path in 360 or more approximately equally spaced positions and record the output values of the selective measuring device in dBμV for each position. Determine the median of the above measured values.

e) Place the calibration antenna in a second horizontal direction which is perpendicular to the first direction.

f) Repeat step d).

g) Place the calibration antenna in a third vertical direction which is perpendicular to the first and second direction.

h) Repeat step d).

Copyright International Electrotechnical Commission
Provided by IHS under license with IEC
No reproduction or networking permitted without license from IHS Not for Resale

i) The median field strength for other values of the radio-frequency signal generator output is given by

median field strength = $E - D + F$

where

D is the output level of the signal generator in step c);

E is the new signal generator output level;

F is the average median value of steps d), f) and h).

NOTE – Calibration is only valid for frequency, antennas, polarization and the antenna position used in the calibration procedure. If any of these change, the site should be recalibrated.

A.3 Radio-frequency coupling devices (RFCDs)

A.3.1 Introduction, outline and selection of RFCDs

The object of using RFCDs is the realization of convenient radiation measurements. The signal level at the input or output of an RFCD can be measured by the same procedure for receivers or transmitters equipped with suitable antenna terminals and the level can be replaced by the field strength or the radiated power. The field strength or the radiated power can be calibrated by the calibration procedure.

There are two principles for constructing RFCDs. One is near-field coupling between an antenna and the EUT in a shielded box. The other is electromagnetic coupling between an enlarged transmission line and the EUT in it. The former would have narrowband characteristics and would be supplied by the manufacturer of the EUT. The latter would have wideband characteristics and would be supplied by another manufacturer. The test fixture is a narrowband RFCD. Stripline arrangement, TEM cell and GTEM cell are wideband RFCDs.

The coupling of RFCDs can be calibrated by test site measurements. The coupling will differ with equipment size and internal construction. Therefore, the calibration is effective only for the same equipment and for the frequency calibrated.

The guide for the selection of RFCDs is shown in table A.2.

A.3.2 Test fixture (narrowband RFCD)

The test fixture is a device for coupling a given equipment with an internal antenna to an input socket and classified into a narrowband RFCD. It is generally designed and provided by the manufacturer of EUT.

A test fixture input radio-frequency signal can be calibrated to the field strength in a test site using EUT. A test fixture allows the performance of relative measurements at the same frequency or around the same frequency. Therefore, the measurements and compliance tests of spurious response immunity and radiated spurious components are excluded.

A.3.2.1 Guide for the construction and measurement of a test fixture

To ensure measurement repeatability, a test fixture which includes the following should be used in the measurement arrangement:

- a radiating element;
- a radio-frequency input terminal connected to the radiating element through a transmission line;
- a means to ensure that the input impedance of the test fixture be the same as the impedance of the transmission line from the radio-frequency signal generator;

Copyright International Electrotechnical Commission
Provided by IHS under license with IEC
No reproduction or networking permitted without license from IHS Not for Resale

- a means for positioning the receiver being measured in a precise, repeatable and stable manner;
- a means to ensure that the presence of the person making the measurement does not affect the results.

It shall also have the following characteristics:

- a coupling loss between the radio-frequency input terminal and the receiver being measured of less than 30 dB;
- a coupling loss variation over the frequency range used in the measurement which does not exceed 2 dB;
- no non-linear elements which can affect the measurement results.

The coupling loss shall be sufficiently low so that the output power requirements at the signal generators used in this standard will not exceed the power output capability of commercially available signal generators.

When making these measurements, precautions shall be taken to ensure that:

- the receiver is adequately shielded from electromagnetic disturbance;
- the attenuation of the coupling between the radiation source and the receiver being measured is sufficiently low, stable and constant throughout the measuring frequency range.

The coupling loss depends on the particular measuring arrangement, the frequency being used, and the receiver being measured. Normally it is not precisely measured, as it will only be useful for a particular measuring arrangement and frequency.

A.3.2.2 Calibration method for a test fixture

a) Measure the receiver radiation sensitivity of the same n ($n \geq 1$) EUT for receiver specific direction in a test site and calculate the average. An LRTS or an anechoic chamber are recommended for this purpose.

b) Measure the receiver sensitivity of all the above EUT in a test fixture at a determined position and direction. The sensitivity is the signal level at the input of the test fixture. Calculate the average of the sensitivity.

c) The calibration is the averaged value of step b) in microvolts (μV) which is replaced by the average value of step a) in microvolts per metre (μV/m).

NOTE 1 – The measurement values of steps a) and b) generally have a dispersion. The sensitivity measurement of data also has dispersion. The average of n measured values has a dispersion of $1/n^{1/2}$ of the original dispersion value. Therefore, the average of n measured values reduces calibration error by $1/n^{1/2}$.

NOTE 2 – The calibration is only valid for the frequency, the same EUT, EUT position and direction. If any of these change, it should be recalibrated.

A.3.3 Wideband RFCDs

A.3.3.1 Stripline arrangement

A.3.3.1.1 General

Previously (see IEC 60489 series), the equipment parameter measurements applicable to this RFCD were all ratio measurements pertaining to receiver radio-frequency energy, for example, receiver selectivity, spurious response immunity and intermodulation immunity. However, if a stripline arrangement input radio-frequency signal is calibrated to the field strength in a test site for EUT, it becomes available for the measurements and compliance tests of radiated measured usable sensitivity for the same EUT at the same frequency.

Copyright International Electrotechnical Commission
Provided by IHS under license with IEC
No reproduction or networking permitted without license from IHS Not for Resale

The calibrations for emission measurements are also possible. If the stripline output voltage is calibrated to the radiated power of EUT in a test site, it becomes available for the measurement of the same EUT at the same frequency.

The stripline is especially suitable for measurements on small equipment. To avoid environmental influences, such as interfering radio services and man-made noise, it is recommended to operate the stripline in a shielded room. With the stripline, it is possible to generate very high field strengths.

NOTE – The above radiation sensitivity corresponding to the first introduction was the RFCD reference sensitivity (selective calling) and defined as the level of the RFCD input signal in microvolts (μV).

A.3.3.1.2 Stripline characteristics

Characteristics	Limits	
	Size I	Size II
Useful frequency range	1 MHz to 200 MHz	1 MHz to 100 MHz
Available field strength	See A.3.3.1.5	
Equipment size limits (antenna included)	Length = 200 mm	400 mm
	Width = 200 mm	400 mm
	Height = 250 mm	500 mm

A.3.3.1.3 Construction of the stripline

The stripline is made of three pieces of a highly conductive metal (e.g. copper sheet) that are sufficiently rigid (e.g. strengthened by wood) to support the EUT mounted in the stripline.

The shape and size of the stripline are shown in figure A.11. It is open on both sides, has an impedance of 100 Ω and shall be terminated with the impedance by resistors having less than 5 Ω of reactance at any frequency from 1 MHz to 200 MHz (see figure A.12). Both outer conductors are connected by the shielding of the transmission line.

The stripline shall be matched to the transmission line impedance with matching networks (see figure A.13) with resistors having less than 5 % reactance at any frequency from 1 MHz to 200 MHz (e.g. for a 50 Ω transmission line, a shunt and a series resistance of 70,7 Ω should be used).

Resistors with very low inductance and capacitance are needed (e.g. surface-mounted resistors) because the size and the material of the resistors have a great influence on reactance, especially at frequencies above 100 MHz.

A.3.3.1.4 Position of the EUT

The EUT shall be mounted on a pedestal, made of a material with a dielectric constant less than 2, so that it is placed at least 10 mm above the lower conductor. The equipment shall be centred in the horizontal plane of the stripline in the following positions.

a) Equipment having an integral antenna is mounted in such a way that the antenna is in a vertical position, with that axis vertical which is closest to vertical in normal use.

b) Equipment having a rigid external antenna is mounted in such a way that the antenna is in a vertical position.

c) Equipment with a non-rigid external antenna: the antenna is mounted vertically with a non-conducting support.

d) Or as agreed with the manufacturer.

Copyright International Electrotechnical Commission
Provided by IHS under license with IEC
No reproduction or networking permitted without license from IHS Not for Resale

A.3.3.1.5 Explication of the term "available field strength in a radiation stripline"

The available field strength is nearly equal to the voltage on the centre conductor divided by the distance from the centre conductor to the outer conductor in meters. The relationship of the field strength in the stripline to the input voltage is given by the following formula:

$$E = V_i \times C \times A \times 1/H \ (\mu V/m)$$

where

E is the field strength;

H is the distance, in metres, between the outer conductor and the centre conductor, and is equal to 0,3 m for size I and 0,6 m for size II;

V_i is the voltage in microvolts (μV) at the input to the stripline;

A is the voltage ratio of the voltage on the centre conductor to V_i, and in this stripline it is equal to 100/170,1 or 0,5858;

C is a constant.

V_i is determined in the same way that the input voltage to a receiver is determined (e.g. the radio-frequency signal generator output reduced by any loss due to attenuators, cables, combining or matching networks). V_i should be determined for each measuring device and frequency used in the measurement.

If the radio-frequency signal generator output is calibrated in microvolts (μV) (e.m.f.) then C is 0,5.

If the radio-frequency signal generator output is calibrated in microvolts (μV) (matched load, ml) then C is 1.

A.3.3.1.6 Radio-frequency signal generator

For susceptibility measurements, a well-shielded radio-frequency generator and a matching network (if required) shall be connected to the input terminal of the stripline.

A.3.3.1.7 Selective measuring device

For emission measurements, a selective measuring device shall be connected to the input of the stripline. The device may be either a frequency selective voltmeter or a spectrum analyzer.

A.3.3.1.8 Calibration method for a stripline

The calibration is the procedure for determining the numerical relationship between RFCD input or output voltage and the equivalent field strength where EUT is placed, or the radiated power of EUT.

A.3.3.1.8.1 Calibration for measurement of equipment receiving radio-frequency electromagnetic energy

a) Measure the receiver radiation sensitivity of the same n ($n \geq 1$) EUT for receiver specific direction in a test site and calculate the average. An LRTS or an anechoic chamber is recommended for this purpose.

b) Measure the receiver sensitivity of all the above EUT in a stripline at a determined position and direction. The sensitivity is the signal level at the input of the stripline. Calculate the average of the sensitivity.

c) The calibration is the average value of step b) in microvolts (μV) which is replaced by the average value of step a) in microvolts per metre (μV/m).

Copyright International Electrotechnical Commission
Provided by IHS under license with IEC
No reproduction or networking permitted without license from IHS Not for Resale

NOTE 1 – The measurement values of steps a) and b) generally have a dispersion. The sensitivity measurement of data also has a dispersion. The average of n measured values has a dispersion of $1/n^{1/2}$ of the original dispersion value. Therefore, the average of n measured values reduces the calibration error by $1/n^{1/2}$.

NOTE 2 – Calibration is only valid for the frequency, the same EUT, and the EUT position and direction. If any of these change, it should be recalibrated.

A.3.3.1.8.2 Calibration for measurement of equipment emitting radio-frequency electromagnetic energy

a) Measure the transmitter radiated power of the same n ($n \geq 1$) EUT for transmitter specific direction in a test site and calculate the average. An LRTS or an anechoic chamber are recommended for this purpose.

b) Measure the transmitter radiated power of all the above EUT in a stripline at a determined position and direction. The radiated power is the signal level at the output of the stripline. Calculate the average of the power.

c) The calibration is the average value of step b) in microvolts (μV) which is replaced by the average value of step a) in watts.

NOTE 1 – The measurement values of steps a) and b) generally have a dispersion. The average of n measured values has a dispersion of $1/n^{1/2}$ of the original dispersion value. Therefore, the average of n measured values reduces the calibration error by $1/n^{1/2}$.

NOTE 2 – Calibration is only valid for the frequency, the same EUT, and EUT position and direction. If any of these change, it should be recalibrated.

A.3.3.2 TEM cell

A.3.3.2.1 General

TEM (transverse electromagnetic mode) cell is a special kind of shielded symmetrical waveguide arrangement. TEM cells are designed for fast and precise radiated susceptibility and emission measurements of mobile radio equipment. The TEM cell needs no measuring antenna and no auxiliary antenna.

TEM cells are applicable to all kinds of radiation measurements on mobile radio equipment. TEM cells are especially suitable for measurements on small equipment. They are independent of environmental influences such as interfering radio services and man-made noise. With TEM cells, it is possible to generate very high field strengths.

A.3.3.2.2 TEM cell characteristics (examples)

Characteristics	Size I	Size II
Frequency range	DC to 250 MHz	DC to 500 MHz
Maximum power input	500 W	500 W
Impedance of cell	50 Ω	50 Ω
SWR_{max}	1,2:1	1,2:1 to 250 MHz 1,4:1 to 500 MHz
Cell total breadth	2 000 mm	1 000 mm
Cell total height	600 mm	300 mm
Cell total depth	1 000 mm	500 mm
Septum depth	740 mm	370 mm
Maximum dimensions of EUT ($b \times h \times d$)	300 mm x 100 mm x 200 mm	150 mm x 50 mm x 100 mm

Copyright International Electrotechnical Commission
Provided by IHS under license with IEC
No reproduction or networking permitted without license from IHS Not for Resale

(concluded)

Access ports	Size I	Size II
Top round outer diameter	110 mm	110 mm
inner diameter	30 mm	30 mm
Side round outer diameter	110 mm	110 mm
inner diameter	30 mm	30 mm
Side rectangular $b \times h$	600 mm × 200 mm	300 mm × 130 mm

A.3.3.2.3 Construction of the TEM cell

The construction of a TEM cell is illustrated in figure A.14. It consists of a tube with a rectangular cross-section and a flat inner conductor. The input and the output connectors are matched to the stripline by tapers. The output terminal of the TEM cell shall be terminated with an equivalent resistive load.

The dimensions of the TEM cell and the tapers provide an impedance of 50 Ω from end to end. When terminated with 50 Ω, a uniform high impedance field approaching that of free space is produced throughout the test sample location. The test location is accessible through a door.

The primary limitation to standard TEM cell usage is the size of the test volume, which is inversely proportional to the upper frequency limit. The upper frequency limit is determined by the appearance of high-order wave modes which perturb the desired TEM mode field distribution. This occurs when the cell width is of the order of half a wavelength. Thus the test chamber size in a standard TEM cell is limited to approximately one-quarter of the lowest operating wavelength. If testing up to 1 GHz (300 mm wavelength) is required, the chamber size would be limited to 75 mm, which is too small for most practical applications.

A.3.3.2.4 Position of the EUT

The EUT shall be placed in the middle of the test volume which is specified by the manufacturer.

a) Equipment having an integral antenna shall be mounted so that the antenna is in a vertical position, with the axis vertical which is closest to vertical in normal use.

b) Equipment having a rigid external antenna is mounted so that the antenna is in a vertical position.

c) For equipment with a non-rigid external antenna, the antenna shall be mounted vertically with a non-conducting and low permittivity material support.

   If the EUT has a power cable or other connections, it shall be led out of the TEM cell horizontally and be as short as possible.

A.3.3.2.5 Radio-frequency signal generator

For susceptibility measurements, a radio-frequency generator, with a power amplifier and a matching network (if required), has to be connected to the input terminal of the TEM cell.

The output terminal of the TEM cell shall be terminated with a resistive load of the nominal value to achieve the specified SWR.

A.3.3.2.6 Selective measuring device

For relative emission measurements, a selective measuring device shall be connected to the input of the TEM cell. The device may be either a frequency selective voltmeter, or a spectrum

Copyright International Electrotechnical Commission
Provided by IHS under license with IEC
No reproduction or networking permitted without license from IHS Not for Resale

analyzer. The output terminal of the TEM cell should be loaded with a load with the same impedance as the TEM cell, for example 50 Ω.

A.3.3.2.7 Calibration method for the TEM cell

A.3.3.2.7.1 Calibration for measurement of equipment receiving radio-frequency electromagnetic energy

a) Measure the receiver radiation sensitivity of the same n ($n \geq 1$) EUT for receiver specific direction in a test site and calculate the average. An LRTS or an anechoic chamber are recommended for this purpose.

b) Measure the receiver sensitivity of all the above EUT in a TEM cell at a determined position and direction. The sensitivity is the signal level at the input of the TEM cell. Calculate the average of the sensitivity.

c) The calibration is the average value of step d) in microvolts (μV) which is replaced by the average value of step a) in microvolts per metre (μV/m).

NOTE 1 – The measurement values of steps a) and b) generally have a dispersion. The sensitivity measurement of data also has dispersion. The average of n measured values has a dispersion of $1/n^{1/2}$ of the original dispersion value. Therefore, the average of n measured values reduces calibration error by $1/n^{1/2}$.

NOTE 2 – The calibration is only valid for the frequency, the same EUT, the EUT position and direction. If any of these change, it should be recalibrated.

NOTE 3 – The above calibration procedure may be omitted, if the manufacturer of the TEM cell guarantees the field strength maximum error for equipment which has lesser dimension than that specified and which is placed in the specified volume with the specified direction.

A.3.3.2.7.2 Calibration for measurement of equipment emitting radio-frequency electromagnetic energy

a) Measure the transmitter radiated power of the same n ($n \geq 1$) EUT for transmitter specific direction in a test site and calculate the average. An LRTS or an anechoic chamber are recommended for this purpose.

b) Measure the transmitter radiated power of all the above EUT in a TEM cell at a determined position and direction. The radiated power is the signal level at the output of the TEM cell. Calculate the average of the power.

c) The calibration is the average value of step b) in microvolts which (μV) is replaced by the averaged value of step a) in watts.

NOTE 1 – The measurement values of steps a) and b) generally have a dispersion. The average of n measured values has a dispersion of $1/n^{1/2}$ of the original dispersion value. Therefore, the average of n measured values reduces calibration error by $1/n^{1/2}$.

NOTE 2 – Calibration is only valid for the frequency, the same EUT, EUT position and direction. If any of these change, it should be recalibrated.

NOTE 3 – The above calibration procedure may be omitted if the manufacturer of the TEM cell guarantees the field strength maximum error for the equipment which has lesser dimension than that specified and which is placed in the specified volume with the specified direction.

A.3.3.3 GHz TEM cell (GTEM)

A.3.3.3.1 General

The GTEM cell is a test facility applicable to both susceptibility and emission measurements on mobile radio equipment for frequencies from d.c. to much above 1 GHz. The facility is a hybrid between a TEM cell and an anechoic chamber (see figures A.8, A.14 and A.15).

Copyright International Electrotechnical Commission
Provided by IHS under license with IEC
No reproduction or networking permitted without license from IHS Not for Resale

The name GTEM emphasizes its gigahertz capability. The GTEM cell permits overcoming the frequency and size limitations inherent in a standard TEM cell, while retaining its basic advantages.

They are independent of environmental influences and man-made noise and do not interfere with radio services. With GTEM cells it is possible to generate very high field strengths.

A.3.3.3.2 Characteristics of a GTEM cell (examples)

Characteristics	Size I	Size II
Maximum height of test volume	500 mm	1 500 mm
Maximum size of object	300 mm x 300 mm x 200 mm	1 000 mm x 1 000 mm x 500 mm
Approximate outer cell dimensions	2 500 mm x 1 000 mm x 670 mm	6 500 mm x 3 000 mm x 2 000 mm
Maximum input power	100 W to 400 W	1 kW to 2 kW
Maximum c.w. field strength	135 V/m	450 V/m
Maximum pulse voltage	15 kV	>80 kV
Maximum pulse field	30 kV/m to 90 kV/m	>50 kV/m to 150 kV/m
Frequency range	d.c. to > 5 GHz	d.c. to > 5 GHz
Field uniformity	± 4 dB	± 4 dB
Typical impedance	50 Ω	50 Ω
SWR	< 2	< 2,5

NOTE 1 – GTEM cells have various sizes from 500 mm to more than 1 750 mm in height between the inner conductor (septum) and the bottom. The typical upper test object dimensions are roughly 30 % to 50 % of the above-mentioned space, depending on the shape of the EUT.

NOTE 2 – A certain manufacturer specifies the maximum input power of 400 W for size 1 and 2 kW for size 2.

NOTE 3 – A certain manufacturer specifies d.c. to 17 GHz for the frequency range of a GTEM cell.

A.3.3.3.3 Example of the construction of a GTEM cell

The GTEM cell is an alternative design for a TEM cell. It consists of a section of a gently flared rectangular coaxial transmission line terminated with a matched load. The end termination of the cell is a wall with absorbing material (see figures A.15 and A.16). At low frequencies it operates as a circuit element 50 Ω load. At high frequencies the absorbers attenuate the incident waves as in an anechoic chamber. The cross-over between these two regions depends on the cell size and the absorber length. The broadband match provided by the termination suppresses the creation of higher order modes. The absorbing material significantly reduces the *Q* of the chamber; thus, the resonance effects tend to be small. The field uniformity is better than ±4 dB versus frequency (d.c. to 1 GHz) in the test chamber of an empty cell.

A.3.3.3.4 Position of the EUT

The EUT and its associated cabling shall be placed in the middle of the test volume which is specified by the manufacturer.

a) Equipment having an integral antenna shall be mounted so that the antenna is in a vertical position, with the axis vertical which is closest to vertical in normal use.

b) Equipment having a rigid external antenna is mounted so that the antenna is in a vertical position.

c) For equipment with a non-rigid external antenna the antenna, shall be mounted vertically with a non-conducting and low permittivity material support.

If the EUT has a power cable or other connections, it shall be led out of the GTEM cell horizontally, or led out via the manufacturer's interface panel, and be as short as possible.

Copyright International Electrotechnical Commission
Provided by IHS under license with IEC
No reproduction or networking permitted without license from IHS Not for Resale

A.3.3.3.5 Radio-frequency signal generator

For susceptibility measurements a radio-frequency generator, with a power amplifier and a matching network (if required), shall be connected to the input terminal of the GTEM cell.

A.3.3.3.6 Selective measuring device

For emission measurements, a selective measuring device shall be connected to the input of the GTEM cell. The device may be either a frequency selective voltmeter or a spectrum analyzer.

A.3.3.3.7 Calibration method for a GTEM cell

A.3.3.3.7.1 Calibration for measurement of equipment receiving radio-frequency electromagnetic energy

a) Measure the receiver radiation sensitivity of the same n ($n \geq 1$) EUT for receiver specific direction in a test site and calculate the average. An LRTS or an anechoic chamber are recommended for this purpose.

b) Measure the receiver sensitivity of all the above EUT in a GTEM cell at a determined position and direction. The sensitivity is the signal level at the input of the GTEM cell. Calculate the average of the sensitivity.

c) The calibration is the average value of step b) in microvolts (μV) which is replaced by the average value of step a) in microvolts per metre (μV/m).

NOTE 1 – The measurement values of steps a) and b) generally have a dispersion. The sensitivity measurement of data also has dispersion. The average of n measured values has a dispersion of $1/n^{1/2}$ of the original dispersion value. Therefore, the average of n measured values reduces calibration error by $1/n^{1/2}$.

NOTE 2 – The calibration is only valid for the frequency, the same EUT, EUT position and direction. If any of these change, it should be recalibrated. If the EUT is small enough compared to the gap of the inner conductor and the outer conductor of the RFCD, the construction difference of the EUT may cause very little coupling difference and a calibrated value may be used for another EUT construction or other EUT which has smaller size.

NOTE 3 – The above calibration procedure may be omitted if the manufacturer of the GTEM cell guarantees the field strength maximum error for the equipment which has a lesser dimension than that specified and which is placed in the specified volume with the specified direction.

A.3.3.3.7.2 Calibration for measurement of equipment emitting radio-frequency electromagnetic energy

a) Measure the transmitter radiated power of the same n ($n \geq 1$) EUT for transmitter specific direction in a test site and calculate the average. LRTS or anechoic chamber are recommended for this purpose.

b) Measure the transmitter radiated power of all the above EUT in a GTEM cell at determined position and direction. The radiated power is the signal level at the output of the GTEM cell. Calculate the average of the power.

c) The calibration is the average value of step b) in microvolts (μV) is replaced by the average value of step a) in watts.

NOTE 1 – The measurement values of steps a) and b) generally have a dispersion. The average of n measured values has a dispersion of $1/n^{1/2}$ of the original dispersion value. Therefore, the average of n measured values reduces calibration error by $1/n^{1/2}$.

NOTE 2 – The calibration is only valid for the frequency, the same EUT, EUT position and direction. If any of these change, it should be recalibrated. If the EUT is small enough compared to the gap of the inner conductor and the outer conductor of the RFCD, the construction difference of the EUT may cause very little coupling difference and a calibrated value may be used to another EUT construction or other EUT which has smaller size.

NOTE 3 – The above calibration procedure may be omitted if the manufacturer of the GTEM cell guarantees the field strength maximum error for the equipment which has a lesser dimension than that specified and which is placed in the specified volume with the specified direction.

Copyright International Electrotechnical Commission
Provided by IHS under license with IEC
No reproduction or networking permitted without license from IHS Not for Resale

A.4 Alternative test mounting arrangement

A.4.1 Simulated man (for belt-mounted radios)

A.4.1.1 General

Most radio paging receivers have an integral antenna. In normal operation, the radio pager is worn on the person and most often is clipped to the clothing at the person's waist. Radio paging antennas are designed for optimum performance when worn on the person. Therefore, to standardize the radio paging radiation sensitivity measurements, a test device is used to simulate the human body. This test device consists of a standard container filled with salt water, and is referred to in this clause as the simulated man (see figure A.17).

The simulated man is used to measure the reference radiation sensitivity (selective calling) and/or average radiation sensitivity (selective calling) of radio pagers.

A.4.1.2 Characteristics of the simulated man

Material	Cast acrylic tube closed at both ends
Height	1 700 mm ± 100 mm
Outside diameter	305 mm ± 2 mm
Sidewall thickness	4,8 mm ± 0,2 mm
Top and bottom thickness	30 mm ± 2 mm.

It is filled with salt (NaCl) solution of 1,5 g per litre of water (H_2O).

A.4.1.3 Characteristics of a light-weight simulated man

The following are the dimensions of "Salty-Lite". The space between the inner and outer tubes is filled with 41,5 l of salt water. The salt (NaCl) concentration is 4,0 g/l. Total "Salty-Lite" weight is 61,5 kg.

1) Outer tube

Material	Acrylic plastic
Outer diameter	303 mm
Height	1 356 mm
Wall thickness	4,3 mm
Top lid	48 mm
Bottom lid	30 mm
Water height	1 315 mm
Water layer thickness:	39 mm

2) Inner tube

Material	Acrylic plastic
Outer diameter	216 mm
Height	1 520 mm (may be shorter)
Wall thickness	6,4 mm
Top lid	not used

It should be noted that the water layer thickness and the tube diameters may be particularly critical dimensions in that they determine the fine structure of the frequency response. All other dimensions are typical.

Copyright International Electrotechnical Commission
Provided by IHS under license with IEC
No reproduction or networking permitted without license from IHS Not for Resale

A.4.1.4 Position of the EUT

The top of the radio pager should be 1,0 m ± 0,1 m from the ground. The radio pager should be fixed on the surface of the simulated man without a gap between them.

A.4.2 Simulated arm

The simulated arm is a test mounting arrangement for radiation measurements on mobile radio equipment, which is arm-mounted while in normal operation (e.g. wrist-watch pager).

Under consideration

A.4.3 Simulated head

The simulated head is a test mounting arrangement for radiation measurements on mobile radio equipment, which is head-mounted while in normal operation (e.g. headset).

Under consideration

A.4.4 Combination of simulated man, arm and head

The combination of simulated man, simulated arm and simulated head is an alternative test mounting arrangement provided for mobile radio equipment which is hand-held or carried on the body of a person while in normal operation (e.g. cordless telephone).

Under consideration

A.5 Baseband signal connection arrangement

A.5.1 General

The radiation measurement on a test site or in an RFCD may need baseband signal connection, for example receiver output to a SINAD meter or an audio frequency signal generator to transmitter input. These connections should not affect radiation measurement results. The following connection arrangement, which needs no connection wire for electromagnetic radio wave, is recommended.

NOTE – SINAD is defined as $\frac{S+N+D}{N+D}$.

A.5.2 Direct electrical connection measuring arrangement

A.5.2.1 General considerations

When a receiver is being measured on a radiation test site or in a radio-frequency coupling device (RFCD), the audio-output voltage should be conducted from the receiver to the remote indicator by a means that will not perturb the field near the receiver. This should be done by making direct electrical connection to the audio-output terminals if they are available, or by making direct electrical connection to the speaker terminals.

A.5.2.2 Field perturbation from the measuring arrangement

When objects having high electrical conductivity such as copper wire are present on a radiation test site or in an RFCD, the field will be perturbed. This perturbation can be minimized by making the wires that are used to make the electrical connection between the remote indicator and the receiver from material which has high resistivity. The re-radiated fields from these connecting wires will be too weak to noticeably affect the radiation measurement results.

Copyright International Electrotechnical Commission
Provided by IHS under license with IEC
No reproduction or networking permitted without license from IHS Not for Resale

The wires should be long enough to ensure that the remote indicator can be located either beyond the edge of the radiation test site, or below the ground surface. If an RFCD is used, the wires should be long enough so that the presence of the remote indicator will not affect the measurement results.

A.5.2.3 Wire characteristics

A flexible material having a resistivity of at least 0,28 Ωm (280 000 $\Omega mm^2/m$) should be used for the wires. A suitable wire can be made of carbon-impregnated polytetrafluoroethylene (PTFE).

A.5.2.4 Measurement arrangement considerations

Even large diameter wire fabricated from this material will have a very high resistance. For example, 30 m of 3 mm diameter wire will have a resistance of 1 MΩ. This does not present a problem for test equipment having a high input impedance (for example, greater than 1 MΩ), because SINAD is a ratio.

Due to the high input impedance of the test equipment and the high resistance of the wires, the capacitance between the wires should be minimal to avoid the effect of audio frequency sensitivity of the measuring arrangement. The wires should be spaced over 100 mm apart for most of their length.

Carbon impregnated PTFE wire will generate considerable noise when it is moved. Care should be taken, therefore, to ensure that there is no movement of the wire while the SINAD is being measured.

NOTE – SINAD is defined as $\frac{S+N+D}{N+D}$.

A.5.2.5 Precautions to be taken when using direct connections

When the receiver has audio output terminals, a specified test load shall be connected across them. The test load should be as small as possible, and the leads should be as short as possible. When connections are made to the speaker, the conducting material used to make the connection should have the smallest possible mass.

A.5.3 Measuring arrangement using an acoustic coupling device to obtain the signal-to-noise ratio

A.5.3.1 General considerations

When a direct electrical connection to either the audio output terminals or the speaker terminals cannot be made, the signal-to-noise ratio may be measured by using an acoustic coupling device.

It is not intended that measurements of audio-frequency response, harmonic distortion, or audio intermodulation distortion be made by using the acoustic coupling device.

In such an arrangement, the measured signal-to-noise ratio is a function of the response characteristics of the audio frequency amplifier, of the internal loud speaker, and of the acoustic coupling device. In this standard, radio-frequency parameter measurements that are made by using the acoustic coupling device should give the same results as though direct electrical connections were made across the speaker terminals. This is accomplished by using the acoustic SINAD instead of the standard SINAD in the methods of measurements.

In this standard the standard signal-to-noise ratio is 12 dB SINAD.

Copyright International Electrotechnical Commission
Provided by IHS under license with IEC
No reproduction or networking permitted without license from IHS Not for Resale

Acoustic SINAD is the signal-to-noise ratio of an acoustic signal which is produced by an acoustic transducer (speaker) when the SINAD measured by direct electrical connection is 12 dB. The acoustic SINAD may be several decibels greater or less than 12 dB.

The manufacturer should open the receiver to make a direct electrical connection across the speaker (or output of the audio amplifier), and determine in the laboratory the acoustic SINAD, which is equivalent to the 12 dB SINAD measured with direct connection to the transducer by using an acoustic coupling device, a microphone, and a correcting network identical to those used on the test site (figure A.18). For the purpose of this standard, the acoustic coupling device shall be understood to mean the combination of the plastic funnel covering the loudspeaker, the 2 m acoustic tube, and the fixture for positioning and supporting the EUT.

After the acoustic SINAD has been determined, all measurements made on the receiver in an RFCD or on a radiation test site will use the acoustic SINAD value whenever the standard signal-to-noise ratio is required.

Measurements of the output signal-to-noise ratio of a receiver shall be made by means of acoustic coupling to a microphone. On a radiation test site, all conducting materials used in the test equipment shall be placed below the surface and the acoustic energy conveyed from the receiver to the microphone by means of a non-conducting acoustic pipe.

When an RFCD is used, the same measuring arrangement may be used without placing the microphone below the ground surface.

The manufacturer shall establish the acoustic signal-to-noise ratio for the receiver and the test arrangement. The acoustic signal-to-noise ratio shall be used in all measurements that require measuring at the standard signal-to-noise ratio (12 dB SINAD).

The manufacturer shall supply or specify the acoustic coupling device and frequency correcting network.

If it is intended that the receiver be worn on a person, the acoustic coupling device shall be constructed to secure the receiver to the surface of the simulated man at the position specified.

NOTE – SINAD is defined as $\frac{S+N+D}{N+D}$.

A.5.3.2 Acoustic coupling device

The acoustic pipe shall be long enough (for example 2 m) to reach from the equipment under test to the underground surface where the microphone is located (see figure A.19). The acoustic pipe shall have an inner diameter of about 6 mm and a wall thickness of about 1,5 mm. A plastic funnel having a diameter appropriate to the size of the loudspeaker in the equipment under test, with soft foam rubber glued to its edge, shall be fitted to one end of the acoustic pipe, and the microphone shall be fitted to the other end. The acoustic pipe should be sufficiently flexible to allow the platform to rotate. The microphone shall have a response characteristic that is flat within 1,0 dB over a frequency range of 50 Hz to 20 000 Hz, a linear dynamic range of at least 50 dB, and a sensitivity sufficient to measure a signal-to-noise ratio of 40 dB. Its size should be sufficiently small (for example 7,5 mm) to couple to the acoustic pipe (see figure A.19).

The influence of the relatively large funnel volume feeding the small diameter pipe causes a de-emphasis of about 6 dB per octave for frequencies above 1 000 Hz. The resulting frequency response has a high peak at 1 000 Hz which could cause a high SINAD at the microphone output. A frequency correcting network should be placed between the microphone output and the SINAD meter input. The corrected frequency response of the acoustic coupling device shall not deviate by more than 3 dB from 400 Hz to 2 600 Hz.

It is very important to fix the centre of the funnel in a reproducible position relative to the receiver under test, as the position of the centre has a strong influence on the frequency response that will be measured. This can be achieved by positioning the equipment in a close-fitting fixture, supplied or specified by the manufacturer, of which the plastic funnel acoustic

Copyright International Electrotechnical Commission
Provided by IHS under license with IEC
No reproduction or networking permitted without license from IHS Not for Resale

coupler is an integral part. Care should be taken to avoid varying the acoustic tube cross-section as the fixture is rotated.

NOTE – SINAD is defined as $\frac{S+N+D}{N+D}$.

A.5.3.3 Determination of the acoustic signal-to-noise ratio (manufacturer's action)

a) Place the receiver in the acoustic coupling device and connect the equipment as illustrated in figure A.18. Make direct electrical connection to the terminals of the output transducer so that they can be connected to the SINAD meter.

b) Measure the frequency response of the combination of loudspeaker and acoustic coupling device at the microphone amplifier output.

c) If the frequency response varies by more than 3 dB between 400 Hz and 2 600 Hz, insert a correcting network between the microphone amplifier output and the input to the SINAD meter that will reduce the response variation to less than 3 dB.

   NOTE – It may be necessary to limit the output level to a value which reduces the loudspeaker distortion to a maximum of 5 %.

d) With the correcting network inserted, make sure that at high radio-frequency input levels there is at least a 20 dB SINAD.

e) Adjust the input radio-frequency signal level to produce a 12 dB SINAD measured by direct electrical connection to the transducer. Measure the acoustic signal-to-noise ratio on the SINAD meter connected to the output of the correcting network. Record this as the acoustic signal-to-noise ratio for this receiver and acoustic coupling device.

NOTE 1 – The correcting network may have to contain a high-input impedance and a low-output impedance amplifier to ensure that the impedance of the SINAD meter does not change the frequency correcting network characteristics.

NOTE 2 – SINAD is defined as $\frac{S+N+D}{N+D}$.

A.5.3.4 Using the acoustic coupling device

When the measurement of the receiver output signal-to-noise ratio is required using an acoustic coupling device, connect the equipment, as illustrated in figure A.18, with the receiver placed in the acoustic coupling device. Insert the correcting network supplied or specified by the manufacturer. Whenever the measurement requires that the output of the receiver be the standard signal-to-noise ratio, the output of the receiver should be set so as to obtain an acoustic signal-to-noise ratio of 12 dB.

A.5.4 Loop-back arrangement from receiver output to transmitter input in duplex operation equipment

A.5.4.1 General consideration

The audio frequency output of a receiver and/or the received signal strength indication signal can be transmitted using a transmitter part of a duplex transceiver.

For the receiver radiation measurement, the received signal strength is near to the radiation sensitivity level and the received signal quality and/or the received signal strength information are transmitted from the transmitter part to the measuring arrangement. The transmitted signal should be received by the measuring arrangement without signal quality degradation. However, this measuring arrangement should not perturb the electromagnetic field between the EUT and the transmitting antenna. The measuring antenna should be constructed by an antenna, a receiver and the SINAD meter or the comparator. The receiver in the measuring arrangement is the same one as the EUT and receiving characteristics are known. The measuring arrangement can measure the receiver signal quality and/or the received signal strength information without wire connection.

Copyright International Electrotechnical Commission
Provided by IHS under license with IEC
No reproduction or networking permitted without license from IHS Not for Resale

For the transmitter radiation measurement, the radio-frequency signal generator high-level output which is modulated by an audio frequency signal or encoder output is connected to an antenna and transmitted to the receiving part of the EUT. The receiving part of the EUT demodulates the modulation signal and modulates the transmitter in the duplex transceiver. The path loss between the antenna connected to the radio-frequency signal generator and the receiver should be kept minimum so as not to degrade the signal quality. However, the antenna, the radio-frequency signal generator and the audio frequency signal generator or the encoder should not perturb the electromagnetic field between the EUT and the measuring antenna. The transmitter can be modulated by the audio frequency signal generator or the encoder without wire connection.

The loop-back arrangement would help equipment size reduction because it needs no mechanical interface. It would also help computer controlled measuring and complex protocol tests.

NOTE – SINAD is defined as $\frac{S+N+D}{N+D}$.

A.5.4.2 Loop-back circuit in duplex mobile equipment

Figure A.20 gives an idea of how the loop-back circuit for analogue and digital modulation equipment can be made.

The digital modulation equipment would be able to transmit more than two signals simultaneously. Figure A.20b shows the information channel loop-back. The other information, for example the received signal strength indication, can be transmitted accordingly. The information channel loop-back can realize measurement for the bit stream. The measurement for character string or the message can be realized using the other information channel or the information channel.

A.6 Correlation of test sites, methods of measurement

A.6.1 Correlation of test sites, between test sites and a RFCD

Test sites are classified into three types, for example OATS, LRTS/AC and RFM sites. Each test site measures in different radio-wave conditions.

OATS measures the composite of a direct wave and a ground-reflected wave. The direct wave does not necessarily reach only in a horizontal direction. The EUT is 1,5 m high on the ground. The angle between the horizontal plane and the direct wave may change between $\tan^{-1}(2,5/3)$ and $-\tan^{-1}(0,5/3)$ in a 3 m test site because the measuring antenna is raised and lowered from 1 m to 4 m. The same angle is reduced between $\tan^{-1}(2,5/30)$ and $-\tan^{-1}(0,5/30)$ in a 30 m test site. The ground-reflected wave is reflected at the area where the incident angle and the deflected angle become equal.

LRTS including AC measure only a direct wave in a horizontal direction in any measurement distance.

RFM sites measure the composite of all directions of radiated electromagnetic energy.

Different EUT would have different radiation directivity in a vertical plane. Therefore, the measurement results in these three types of test site are not necessarily the same, and correlation of different test sites would have no meaning.

In an RFCD measurement, coupling between an RFCD and an EUT will differ with the size and/or construction of the EUT. This means the radio wave in an RFCD will not be the same as in any test site. Very small size equipment, compared to the gap between inner conductor and outer conductor of a wideband RFCD, may have the same condition in LRTS. If the condition differs, the calibration coefficient dispersion will be increased and correlation will not be good.

Copyright International Electrotechnical Commission
Provided by IHS under license with IEC
No reproduction or networking permitted without license from IHS Not for Resale

A.6.2 Methods of measurement

The basic methods of measurement which measure only one direction of the EUT in each test site are described in each test site subclause. Table A.3 gives an overview of methods of measurement for integral antenna mobile radio equipment. These methods of measurement will be assembled from the basic method of measurement. Table A.3 indicates measurement methods to be used for different parameters of objects to be measured.

NOTE – All methods of measurement will be described in a future step-by-step procedure. See note 3 in table A.3.

Table A.3 - Overview of methods of measurement for integral antenna mobile radio equipment

Measurement items	OATS	LRTS/AC	RFM	RFCD
Transmitters				
– Average radiated power	A	B		
– Maximum radiated power		C		
– RFM radiated power			D	
– RFCD radiated power				E
Receivers				
– Average radiation sensitivity				
• Average radiation sensitivity (MUS)	H	I		
• Compliance test method	J	K		
• Average radiation sensitivity (SUS)				
– Reference radiation sensitivity	L			
– Normal radiation sensitivity	M	N		
– RFM radiation sensitivity			O	
– Diversity radiation sensitivity			P	
– RFCD radiation sensitivity				Q

NOTE 1 – A to E and H to O in the above table show different methods of measurement to be described.

NOTE 2 – Q is not the same as the original definition. The original definition uses RFCD input voltage in microvolts (μV). O uses equivalent field strength in RFCD in microvolts per metre (μV/m).

NOTE 3 – A to E and H to Q will be described for the case of A3, F3 continuous wave. Other modulation or access methods could be the combination of these methods and the difference between A3. F3 continuous wave and other modulation or access method in the terminal measurement method.

NOTE 4 – The spurious radiation power can be measured with the same procedure as the radiation power except that it may be necessary to reduce the carrier power by a band-eliminating filter because the carrier power may affect measurement result.

A.6.2.1 Electromagnetic energy emission measurement

The average radiation power means an average of eight directions. Both OATS and LRTS/AC measure eight direction averages. However, A and B mean these methods of measurement differ from each other in certain details.

The maximum radiation power means the maximum of the direct radiated power in 4π steradian globe directions.

The RFM radiation power is the integration power of all directions.

Copyright International Electrotechnical Commission
Provided by IHS under license with IEC
No reproduction or networking permitted without license from IHS Not for Resale

The RFCD radiation power means power measured at specific direction and place in RFCD. The calibration of RFCD would be made with specific direction in OATS or LRTS/AC. The average of eight directions in RFCD may be measured.

A.6.2.2 Electromagnetic energy receiving measurement

The average radiation sensitivity means the average of eight direction sensitivities. The compliance test method of average radiation sensitivity means that if for five or more directions, a compliance with the specification has been recorded, the equipment does comply; otherwise it does not comply.

The reference radiation sensitivity means the radiation sensitivity in a minimum radiation sensitivity direction. It may be other than eight directions.

The normal radiation sensitivity means the sensitivity in a normal direction, which the manufacturer has specified. M and N are the same as the basic method of measurement respectively.

The RFM radiation sensitivity is similar to the real sensitivity. Care should be taken if a digital modulation receiver is measured because the demodulation circuit will be affected by a fading signal which has arisen from the random path moving. The random path moving speed may not cover all speed required.

The diversity radiation sensitivity means the similar sensitivity to the real sensitivity of equipment which has diversity antenna. The same care as for the above RFM radiation sensitivity is necessary.

The RFCD radiation sensitivity means sensitivity measured at a specific direction and place in the RFCD. The calibration of the RFCD would be made with specific direction in OATS or LRTS/AC. The average of eight directions in the RFCD can be measured.

A.7 Antennas

This clause gives additional information for an antenna used in test site measurements. The antenna characteristics will be supplied by the manufacturer. If an antenna calibration is necessary, see IEC 60489-8. It shall be performed by the manufacturer or nationally recognized antenna calibration laboratory.

A.7.1 Half-wave dipole antenna

The half-wave dipole antenna is used as the auxiliary antenna which replaces the EUT during part of the measurement. It may also be used as the measuring antenna and the transmitting antenna for some test sites.

The antenna shall be a balanced dipole and resonant in length. It shall be matched to the feeder by a suitable transforming device. Connection to the feeder and the input of the measuring apparatus shall be made through a symmetric-asymmetric transformer arrangement. The antenna shall be rotatable so that all polarization of incident radiation may be measured.

The balance of the antenna shall be such that when the antenna is rotated in a uniform field, the level in the cross-olarization direction shall be at least 20 dB below that in the parallel polarization direction.

Copyright International Electrotechnical Commission
Provided by IHS under license with IEC
No reproduction or networking permitted without license from IHS Not for Resale

The preferred fixed frequency dipoles between 1,7 GHz and 6 GHz should be as follows:

a) the total radiation element length is nearly half-wave;

b) the bandwidth in which the SWR is less than 1,5 is 1 % to 2,5 % of the centre frequency;

c) input impedance is 50 Ω;

d) the radiation coefficient is 0,5 dB ± 1 dB.

In frequencies of more than 6 GHz, the half-wave dipole antenna will not be commercially available and the pyramidal horn antenna is recommended instead.

A.7.2 Pyramidal horn antenna

It is recommended to use the pyramidal horn antenna as the measuring antenna and the transmitting antenna at frequencies higher than 1 GHz. It is used as the calibrated antenna and the auxiliary antenna at higher frequencies than 6 GHz and may also be used at frequencies between 0,7 GHz and 18 GHz.

The pyramidal horn antenna should have waveguide-to-coaxial transition and the input impedance should be 50 Ω. The antenna shall be rotatable so that all polarization of incident radiation may be measured.

The balance of the antenna shall be such that when the antenna is rotated in a uniform field, the level in the cross-polarization direction shall be at least 20 dB below that in the parallel polarization direction.

The preferred pyramidal horn antenna should be as follows:

a) the radiation gain is 10 dBi to 20 dBi considering the directivity and the gain variation is ±0,5 dB;

b) input impedance is 50 Ω and the SWR is less than 1,5;

c) the radiation gain variation is ±0,5 dB of specified or measured value;

d) the radiation coefficient is ±0,5 dB of specified or measured value.

A.7.3 Log-periodic antenna

The log-periodic antenna is one of the wire antenna arrays, designed so that its characteristic dimensions are periodic with the logarithm of the frequency. The antenna will be essentially frequency independent. The frequency range for the log-periodic antenna is roughly given by the frequencies at which the longest and shortest dipoles in the array are half-wave resonant. Ten times wideband characteristics can be obtained.

An example of the log-periodic antenna is as follows:

a) the frequency range is 200 MHz to 2 000 MHz;

b) the average gain in the frequency range is 5 dB to a half-wave dipole;

c) the front to back gain ratio is more than 15 dB;

d) the input impedance is 50 Ω and the SWR is less than 2.

Copyright International Electrotechnical Commission
Provided by IHS under license with IEC
No reproduction or networking permitted without license from IHS Not for Resale

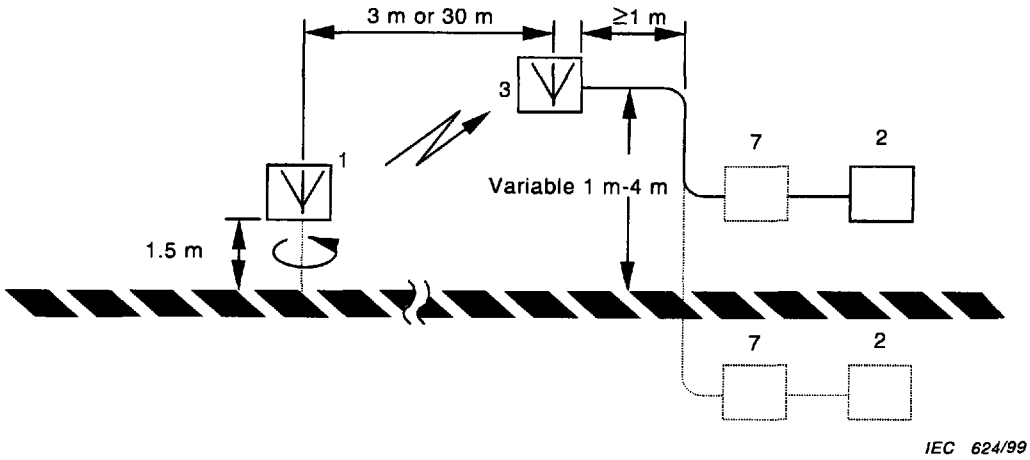

Figure A.1a – Measuring arrangement for the EUT

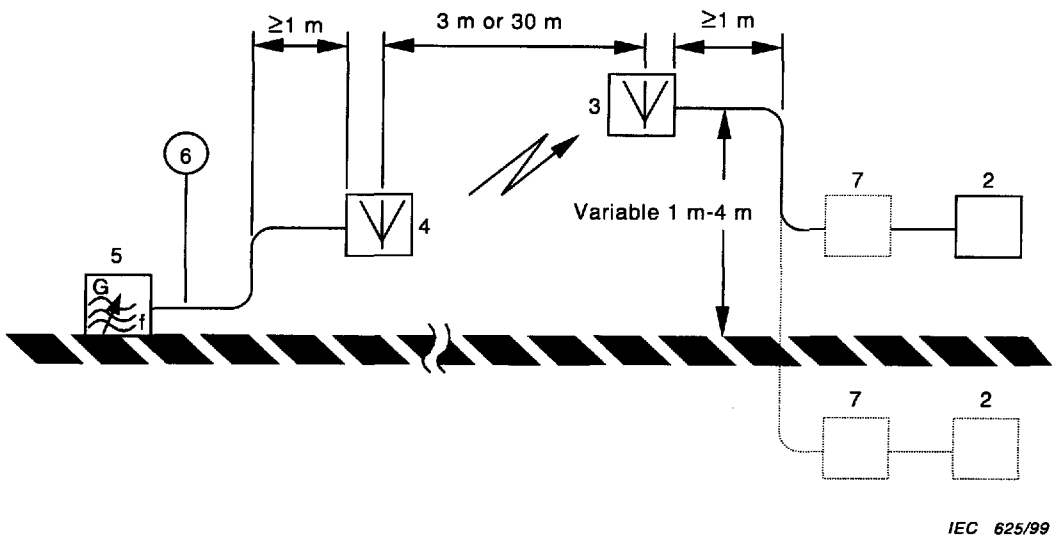

Figure A.1b – Measuring arrangement for substitution measurement

Key

1 Transmitter under test

2 Selective measuring device

3 Measuring antenna

4 Auxiliary antenna

5 Radio-frequency signal generator

6 Selective measuring device

7 Optional calibration attenuator for measuring the effective radiated power or fundamental oscillation rejection filter for measuring non-essential emissions

Figure A.1 – Measuring arrangement for radio-frequency emission on an OATS

Copyright International Electrotechnical Commission
Provided by IHS under license with IEC
No reproduction or networking permitted without license from IHS Not for Resale

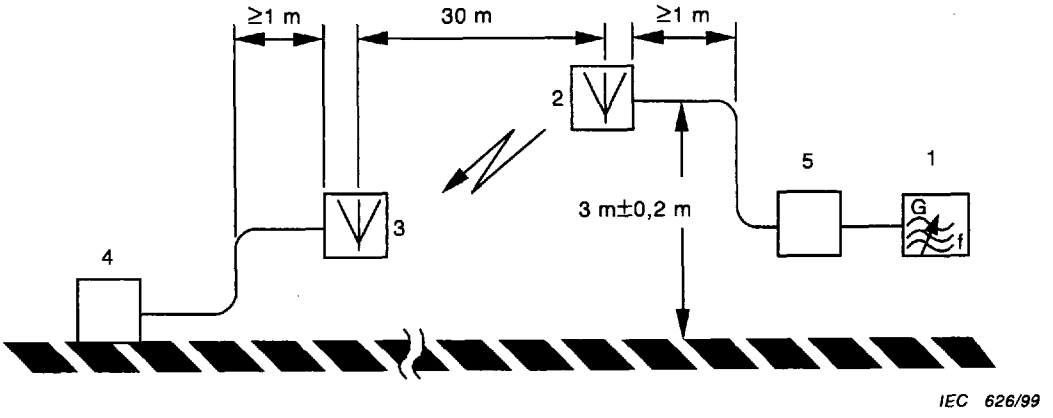

Figure A.2a – Measuring arrangement for calibration measurement

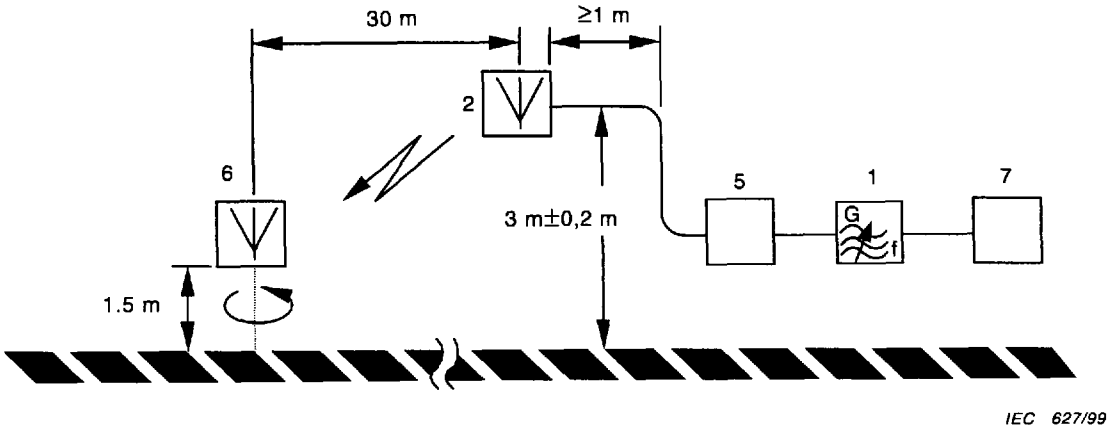

Figure A.2b – Measuring arrangement for the EUT

Key

1 Radio-frequency signal generator

2 Transmitting antenna

3 Calibration antenna

4 Selective measuring device

5 80 dB step attenuator, 1 dB steps

6 Receiver under test

7 Audio frequency signal generator or encoder

Care should be taken to ensure that the field in the vicinity of the receiver under test is not disturbed by the test equipment.

Figure A.2 – Measuring arrangement for radio-frequency receiving on an OATS

Copyright International Electrotechnical Commission
Provided by IHS under license with IEC
No reproduction or networking permitted without license from IHS Not for Resale

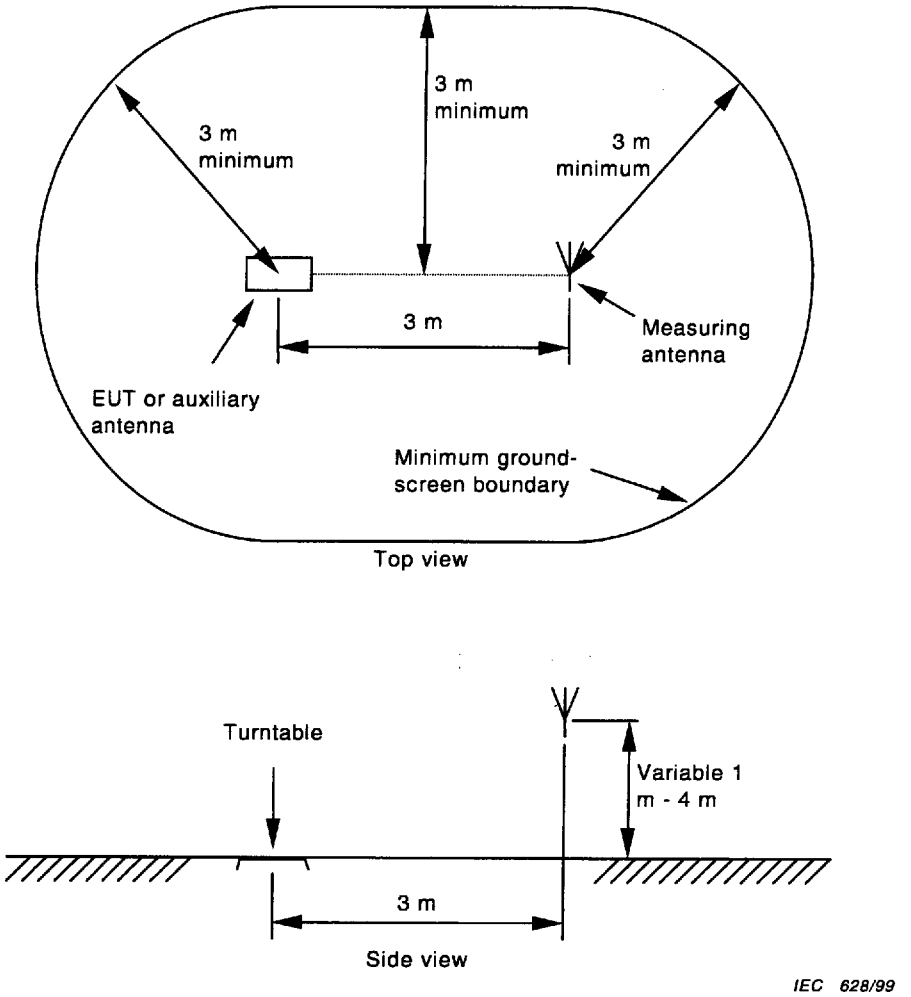

Figure A.3 – 3 m site dimensions inside the ground-screen boundary

Copyright International Electrotechnical Commission
Provided by IHS under license with IEC
No reproduction or networking permitted without license from IHS
Not for Resale

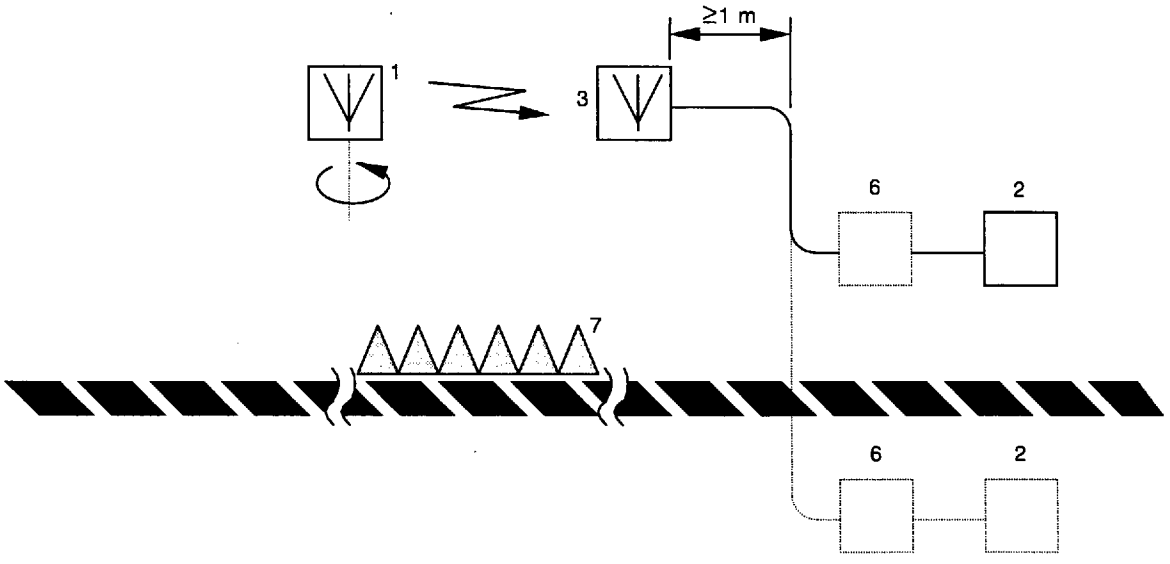

Figure A.4a – Measuring arrangement for the EUT

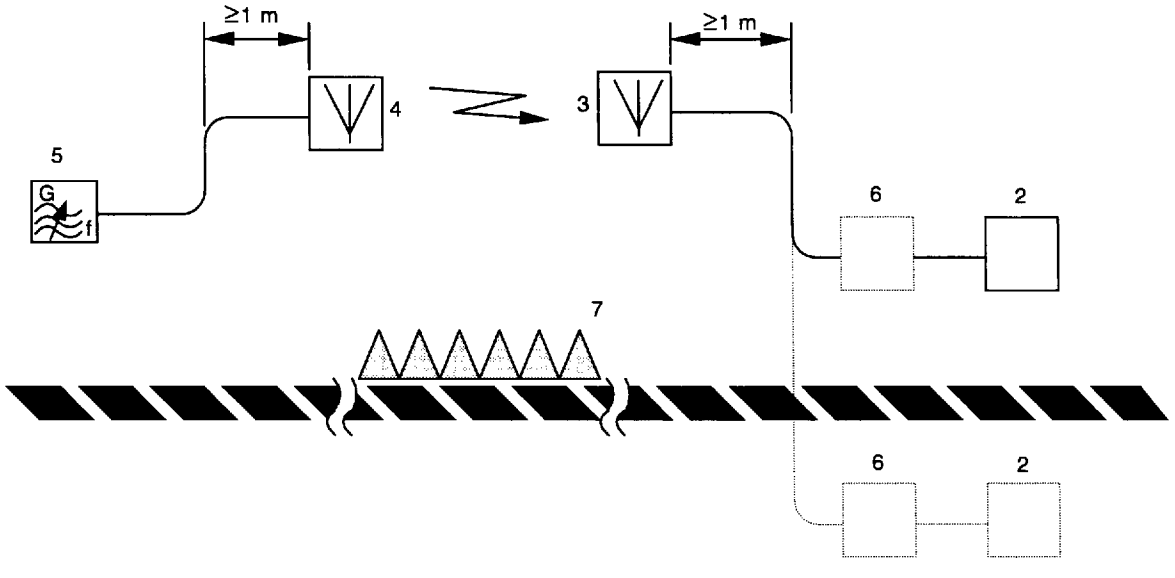

Figure A.4b – Measuring arrangement for substitution measurement

Key

1 Transmitter under test

2 Selective measuring device

3 Measuring antenna

4 Auxiliary antenna

5 Radio-frequency signal generator

6 Optional calibrated attenuator for measuring the effective radiated power, or fundamental oscillation rejection filter for measuring non-essential emissions

7 Radio wave absorber

Figure A.4 – Measuring arrangement for radio-frequency emission on an LRTS using radio-wave absorber

Copyright International Electrotechnical Commission
Provided by IHS under license with IEC
No reproduction or networking permitted without license from IHS Not for Resale

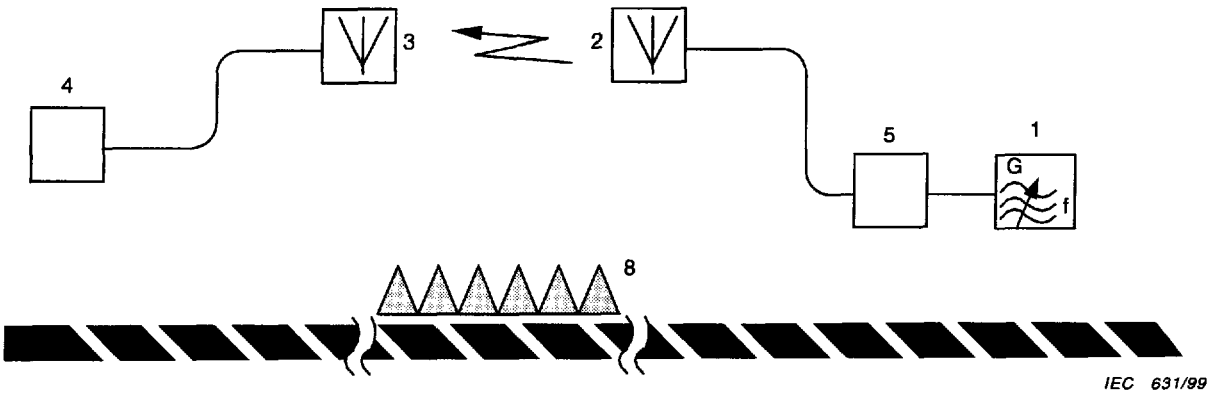

Figure A.5a – Measuring arrangement for calibration measurement

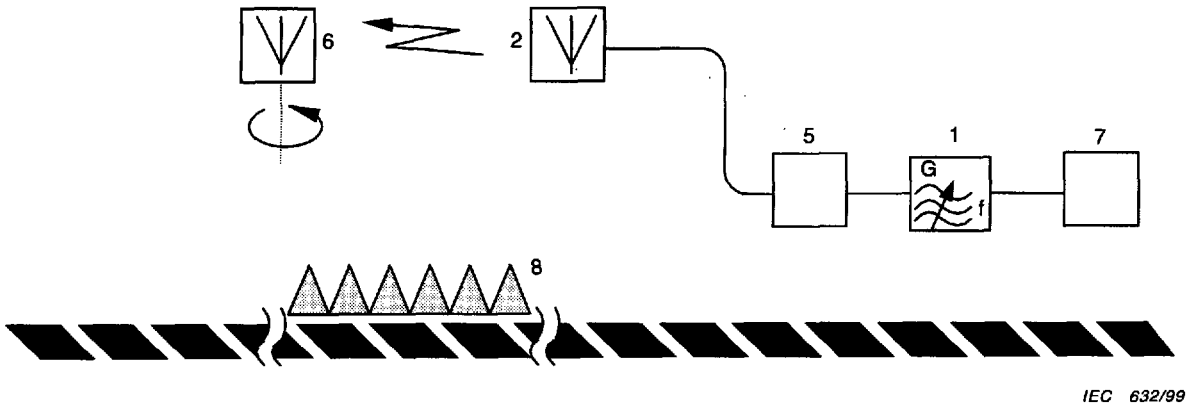

Figure A.5b – Measuring arrangement for the EUT

Key

1 Radio-frequency signal generator
2 Transmitting antenna
3 Calibration antenna
4 Selective measuring device
5 80 dB step attenuator, 1 dB steps
6 Receiver under test
7 Encoder
8 Radio-wave absorber

Care should be taken to ensure that the field in the vicinity of the receiver under test is not disturbed by the test equipment.

Figure A.5 – Measuring arrangement for radio-frequency receiving on an LRTS using radio-wave absorber

Copyright International Electrotechnical Commission
Provided by IHS under license with IEC
No reproduction or networking permitted without license from IHS Not for Resale

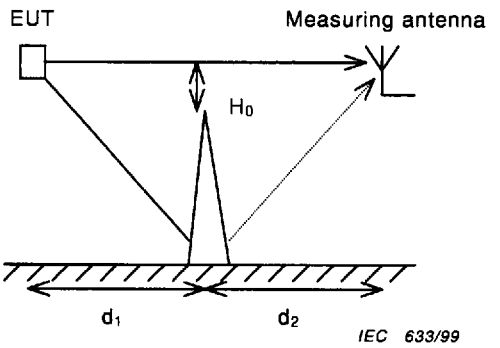

Figure A.6a – Radio-wave screening curtain

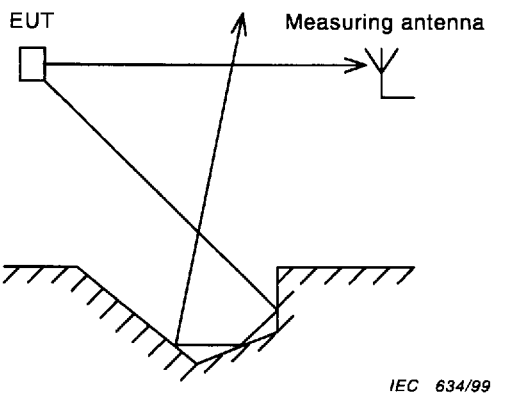

Figure A.6b – Mazed gap

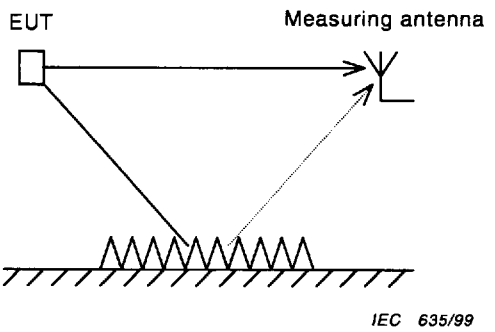

Figure A.6c – Radio-wave absorber

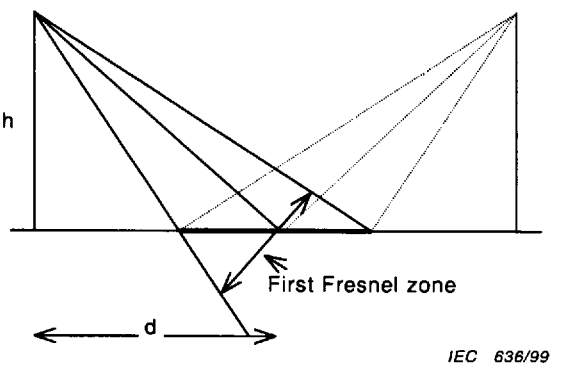

Figure A.6d – Width of absorber

Figure A.6 – Ground-reflected wave suppression

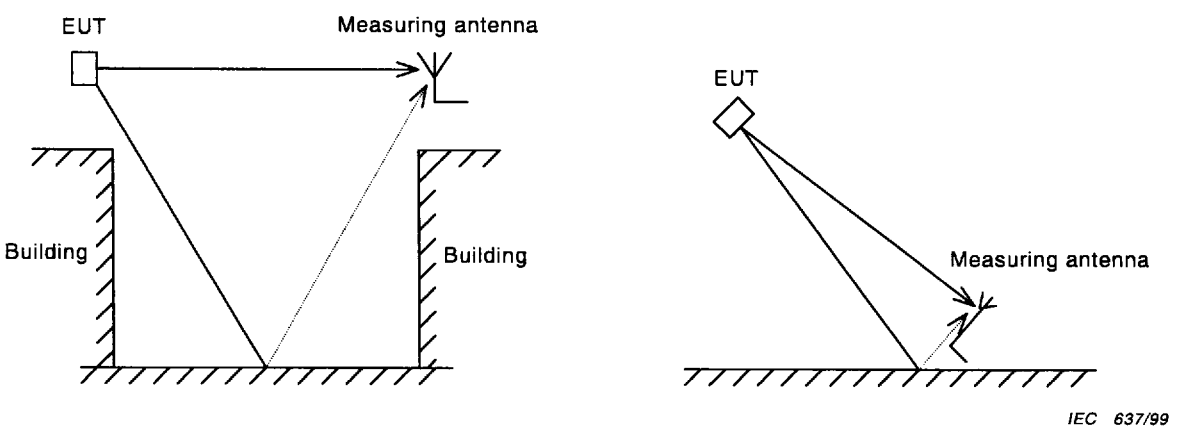

Figure A.7 – Higher position to reduce ground-reflected wave

Copyright International Electrotechnical Commission
Provided by IHS under license with IEC
No reproduction or networking permitted without license from IHS
Not for Resale

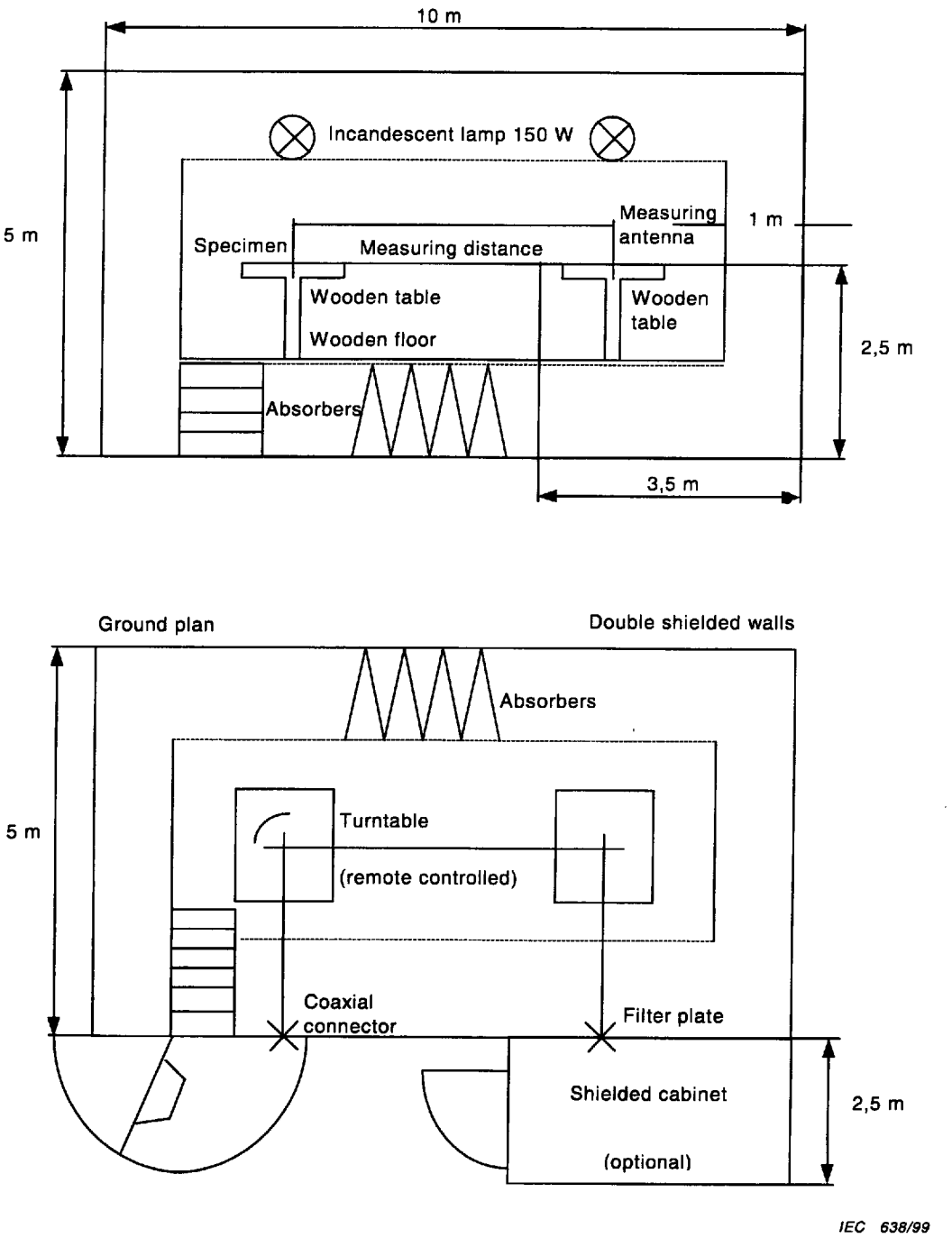

Figure A.8 – Example of an anechoic chamber

Copyright International Electrotechnical Commission
Provided by IHS under license with IEC
No reproduction or networking permitted without license from IHS Not for Resale

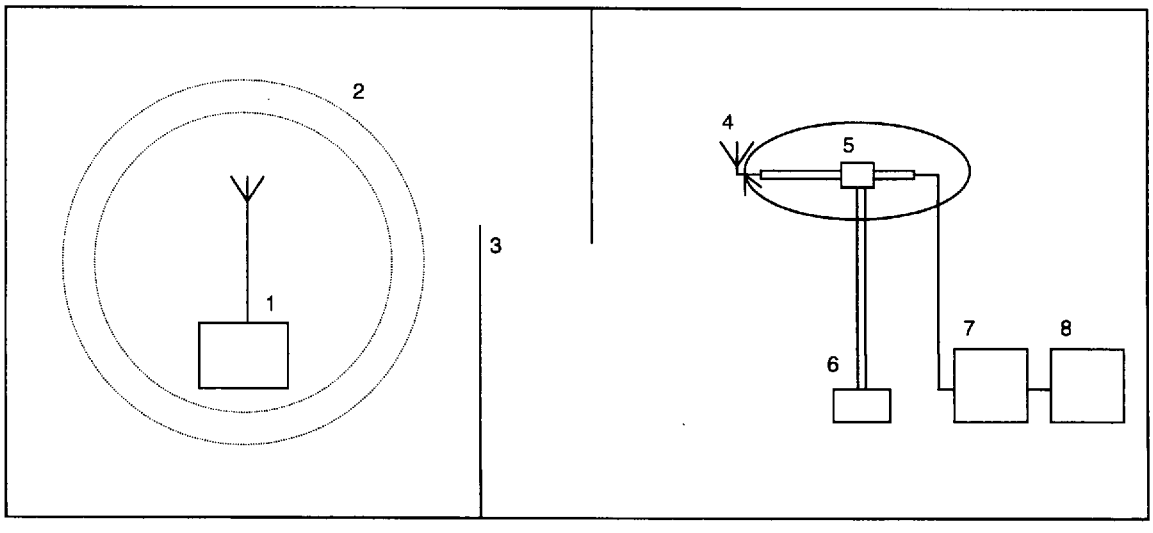

IEC 639/99

Key

1 Auxiliary antenna and radio-frequency signal generator or EUT
2 Radio-wave scatters
3 Obstacles
4 Measuring antenna
5 Rotator for changing direction of measuring antenna
6 Rotator for rotation of arm which support measuring antenna
7 Selective measuring device
8 Micro-computer with A/D converter

Figure A.9 – Measuring arrangement for radio-frequency emission on an RFM (random field measurement) site using rotator assisted random path arrangement

Copyright International Electrotechnical Commission
Provided by IHS under license with IEC
No reproduction or networking permitted without license from IHS Not for Resale

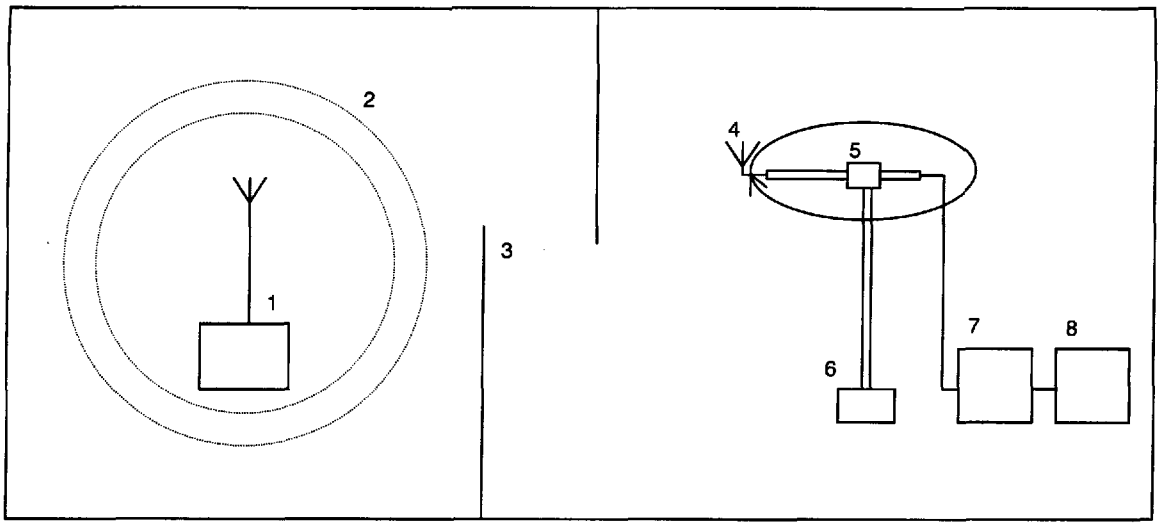

IEC 640/99

Key

1 Calibration antenna selective measuring device and micro-computer with A/D converter

or

EUT followed by dynamic SINAD meter and/or micro-computer with A/D converter

2 Radio-wave scatters

3 Obstacles

4 Measuring antenna

5 Rotator for changing direction of measuring antenna

6 Rotator for rotation of arm which supports measuring antenna

7 Radio-frequency signal generator

8 Audio frequency signal generator or encoder

Figure A.10 – Measuring arrangement for radio-frequency receiving on an RFM (random field measurement) site using rotator assisted random path arrangement

Copyright International Electrotechnical Commission
Provided by IHS under license with IEC
No reproduction or networking permitted without license from IHS Not for Resale

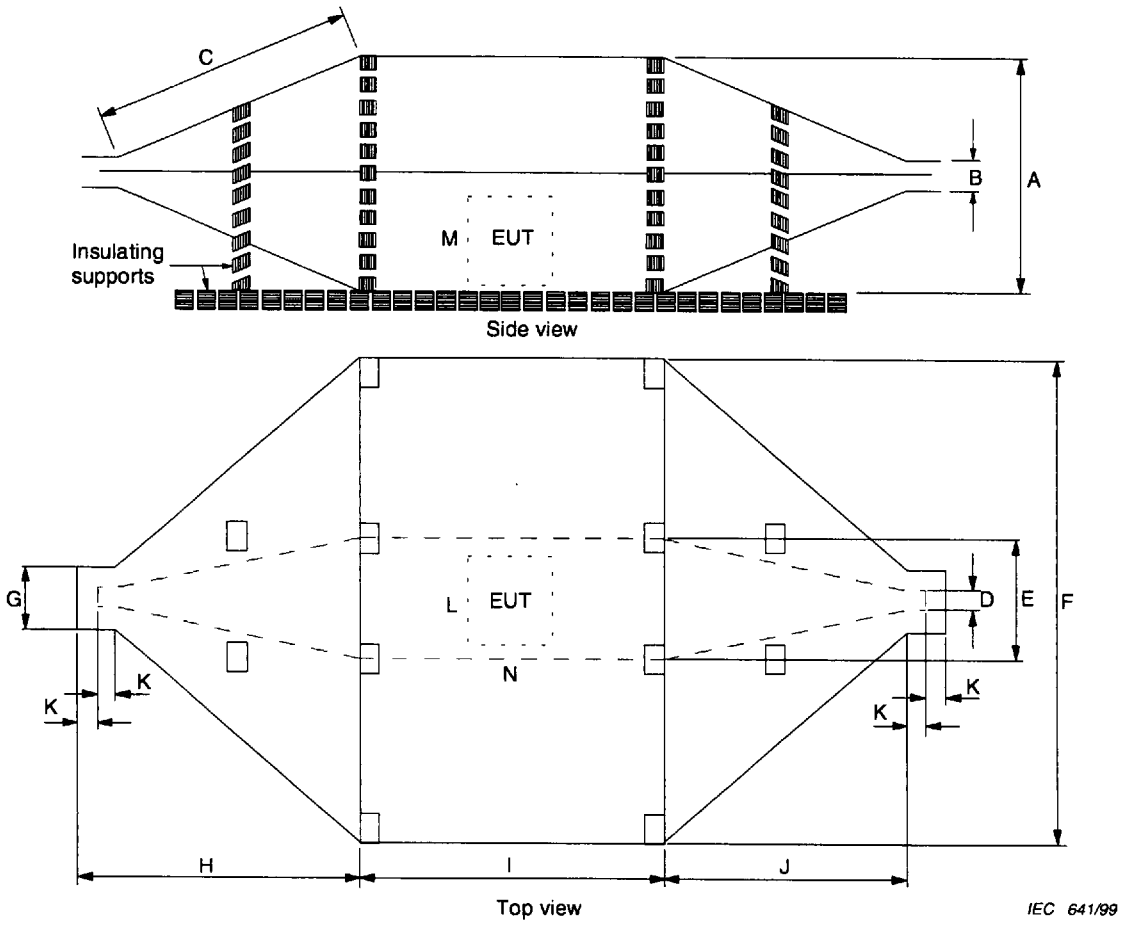

Dimensions	Size I mm	Size II mm
A	600	1 200
B	60	120
C	658	1 316
D	31	62
E	312	624
F	1 250	2 500
G	125	250
H	700	1 350
I	800	1 500
J	600	1 200
K	50	75
L	200	400
M	250	500
N	200	400

Figure A.11 – Stripline

Copyright International Electrotechnical Commission
Provided by IHS under license with IEC
No reproduction or networking permitted without license from IHS Not for Resale

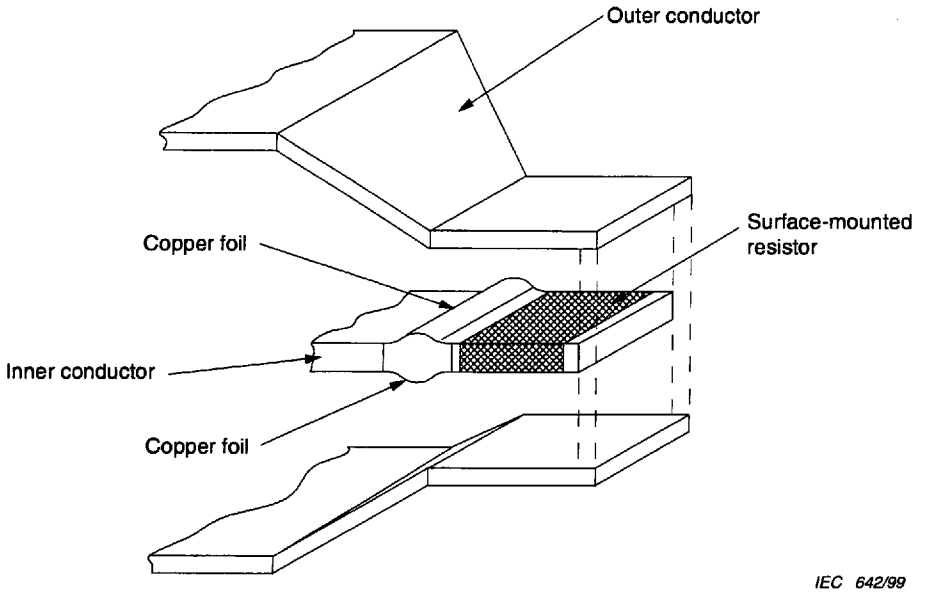

Figure A.12 – Detail of stripline load

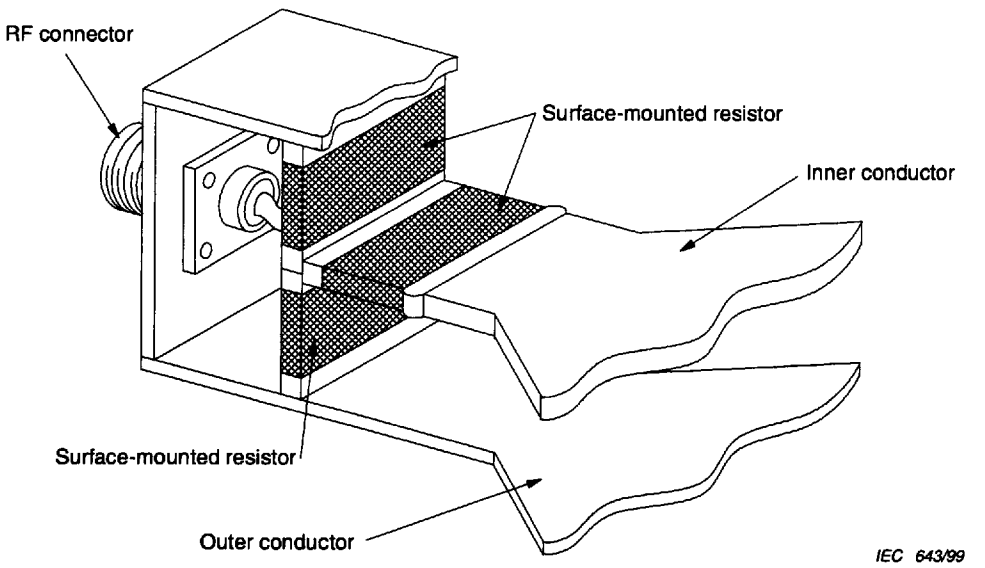

Figure A.13 – Detail of stripline input matching resistor

Copyright International Electrotechnical Commission
Provided by IHS under license with IEC
No reproduction or networking permitted without license from IHS Not for Resale

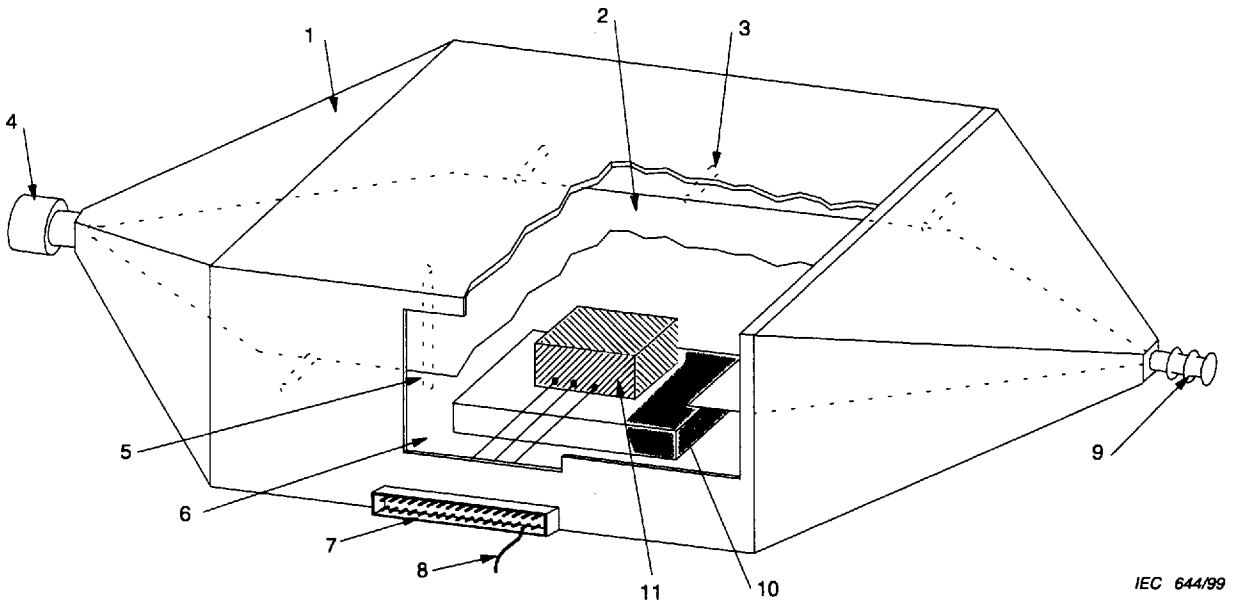

Key

1 Outer conductor, shield

2 Inner conductor (septum)

3 Insulator

4 Input

5 Insulator

6 Door

7 Socket panel

8 Test object power supply

9 Terminating resistance 50 Ω

10 Insulation

11 Test object (maximum height :
1/3 of the distance between the cell floor and the septum)

Figure A.14 – Example of a TEM cell

Copyright International Electrotechnical Commission
Provided by IHS under license with IEC
No reproduction or networking permitted without license from IHS Not for Resale

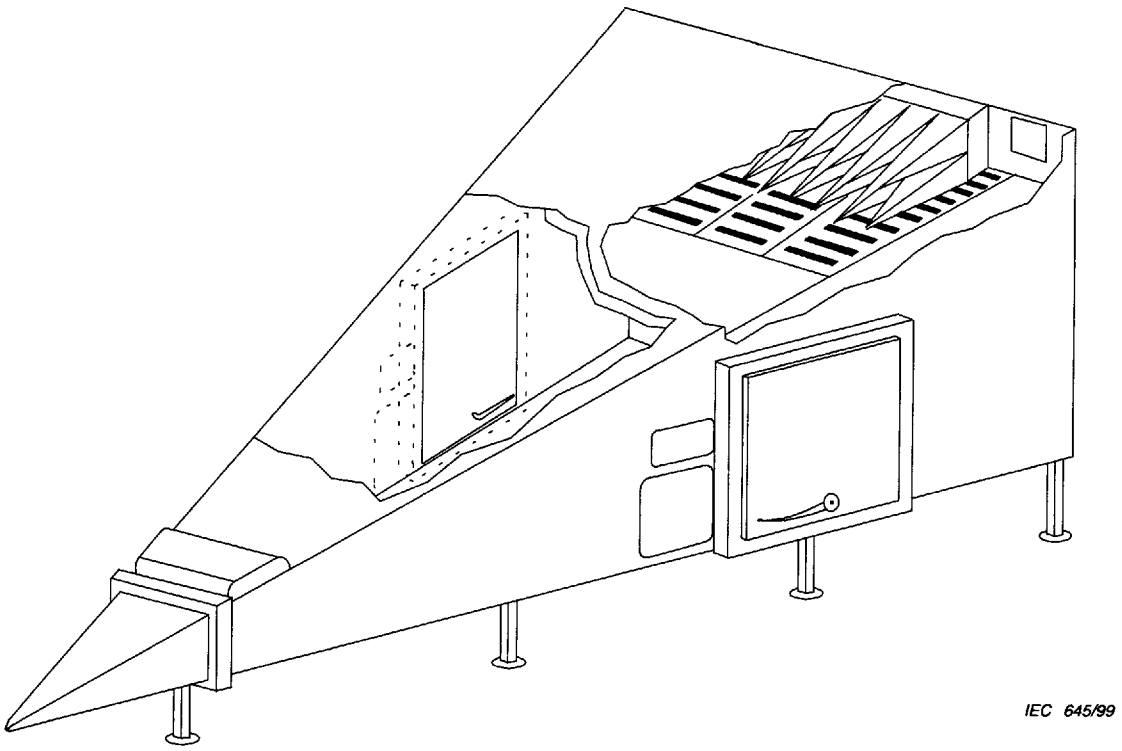

Figure A.15 – Example of a GTEM cell

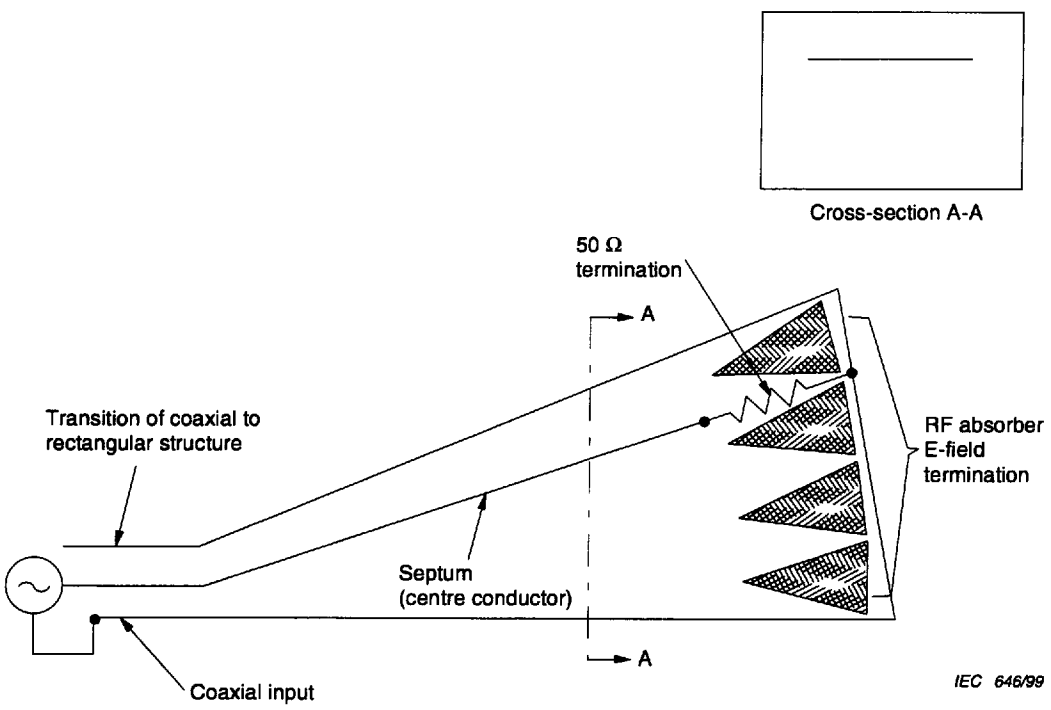

Figure A.16 – Example of a GTEM cell construction

Copyright International Electrotechnical Commission
Provided by IHS under license with IEC
No reproduction or networking permitted without license from IHS Not for Resale

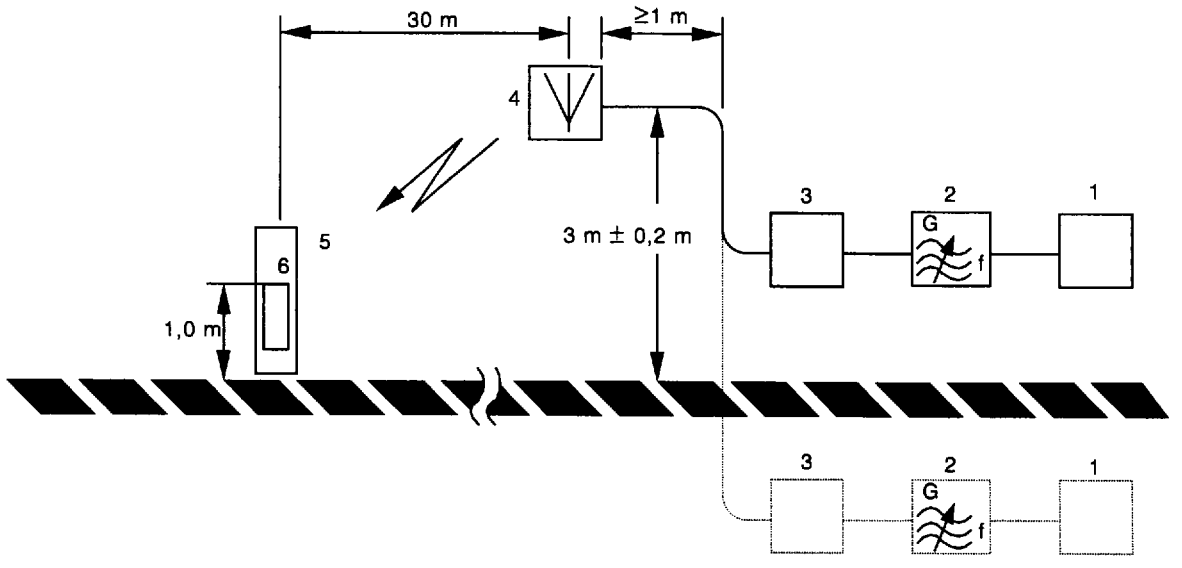

Key

1 Encoder

2 Radio-frequency generator

3 80 dB step attenuator, steps of 1 dB

4 Transmitting antenna

5 Simulated man

6 Receiver under test

Care should be taken to ensure that the field in the vicinity of the receiver under test is not disturbed by the equipment.

Figure A.17 – Measuring arrangement for radio pagers on an OATS (open area test site (30 m))

Copyright International Electrotechnical Commission
Provided by IHS under license with IEC
No reproduction or networking permitted without license from IHS Not for Resale

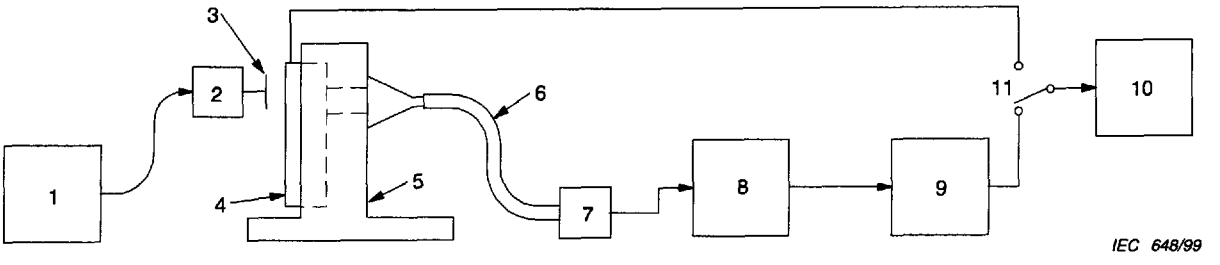

Key

1 Signal generator
2 Load
3 Probe
4 Equipment with integral transducers
5 Fixture for positioning the EUT and the plastic funnel acoustic coupler
6 Acoustic tube
7 Microphone
8 Microphone preamplifier and polarizing voltage supply (if required)
9 Correcting network with isolation amplifier
10 SINAD meter
11 Switch to select either the electrical or the acoustic measurement

Figure A.18 – Test arrangement for determining the acoustic signal-to-noise ratio indication that is equivalent to the SINAD obtained by means of a direct electrical connection

Copyright International Electrotechnical Commission
Provided by IHS under license with IEC
No reproduction or networking permitted without license from IHS Not for Resale

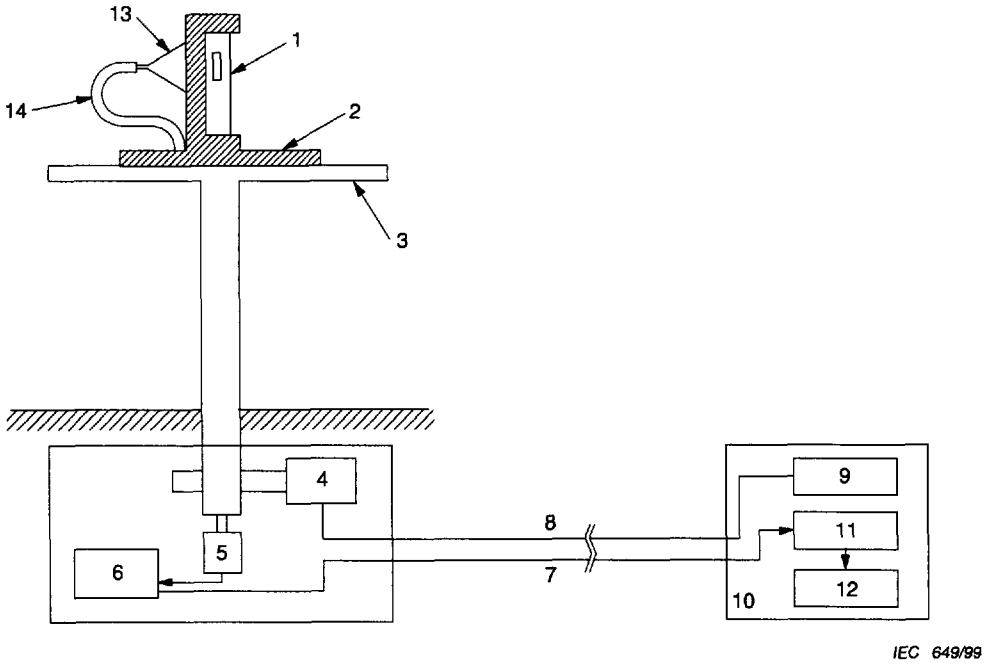

Key

1 EUT
2 Fixture for positioning the EUT and the plastic funnel acoustic coupler
3 Rotatable platform
4 Remotely controlled motor for rotatable platform
5 Microphone
6 Microphones amplifier and polarizing voltage supply
7 Audio frequency cable from amplifier to off-site monitoring location
8 Remote control cable from motor to its off-site controller
9 Remote motor controller
10 Off-site signal monitor and motor controller location
11 Correcting network having an isolation amplifier (if necessary)
12 SINAD meter
13 Plastic funnel acoustic coupler
14 Acoustic tube

Figure A.19 – Rotatable platform with EUT for acoustic measurements to determine radio-frequency properties

Copyright International Electrotechnical Commission
Provided by IHS under license with IEC
No reproduction or networking permitted without license from IHS Not for Resale

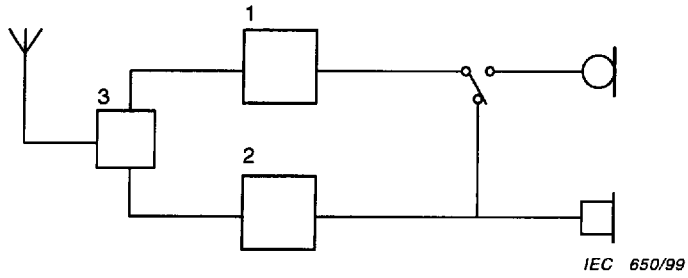

Key

1 Transmitter part

2 Receiver part

3 Duplexes

Figure A.20a – Loop-back arrangement for analogue modulation equipment

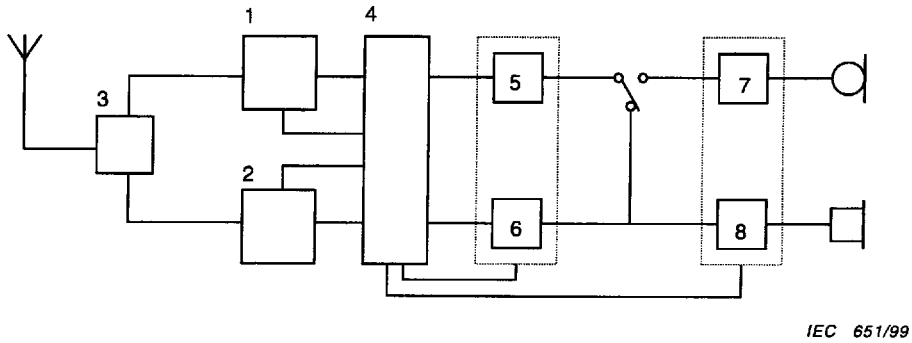

Key

1 to 3 The same as in figure A.20a

4 Framing, synchronization and controls

5 Channel coder

6 Channel decoder

7 Voice coder

8 Voice decoder

Figure A.20b – Loop-back arrangement for digital modulation equipment

Figure A.20 – Loop-back arrangement in duplex operation equipment

Copyright International Electrotechnical Commission
Provided by IHS under license with IEC
No reproduction or networking permitted without license from IHS Not for Resale

ISBN 2-8318-4773-7



ICS 33.060.20; 33.060.30

Typeset and printed by the IEC Central Office
GENEVA, SWITZERLAND

Copyright International Electrotechnical Commission
Provided by IHS under license with IEC
No reproduction or networking permitted without license from IHS

Not for Resale

NORME INTERNATIONALE
INTERNATIONAL STANDARD

CEI
IEC
489-1

1983

AMENDEMENT 1
AMENDMENT 1

1996-06

Amendement 1

Méthodes de mesure applicables au matériel de radiocommunication utilisé dans les services mobiles –

Première partie: Définitions générales et conditions normales de mesure

Amendment 1

Methods of measurement for radio equipment used in the mobile services –

Part 1: General definitions and standard conditions of measurement

© CEI 1996 Droits de reproduction réservés — Copyright – all rights reserved

Bureau Central de la Commission Electrotechnique Internationale 3, rue de Varembé Genève, Suisse

Commission Electrotechnique Internationale
International Electrotechnical Commission
Международная Электротехническая Комиссия

CODE PRIX
PRICE CODE B

Pour prix, voir catalogue en vigueur
For price, see current catalogue

Copyright International Electrotechnical Commission
Provided by IHS under license with IEC
No reproduction or networking permitted without license from IHS

Not for Resale

AVANT-PROPOS

Le présent amendement a été établi par le sous-comité 12F: Matériels utilisés dans les services mobiles, du comité d'études 12 de la CEI: Radiocommunications.

Le texte de cet amendement est issu des documents suivants:

FDIS	Rapports de vote
12F(BC)140 12F(BC)141 12F(BC)142	12F(BC)146 12F(BC)150 12F(BC)151

Les rapports de vote indiqués dans le tableau ci-dessus donnent toute information sur le vote ayant abouti à l'approbation de cet amendement.

Page 2

SOMMAIRE

Insérer, avant l'article 12 existant, le titre du nouvel article 12:

12 Canaux d'essai normalisés

Renuméroter l'article 12 existant et les articles suivants.

Page 6

1 Domaine d'application

Remplacer le texte du deuxième alinéa par le texte suivant:

La présente norme est limitée aux stations terrestres et mobiles des services mobiles et aux matériels portatifs et personnels qui peuvent fonctionner sur une ou plusieurs voies de transmission; elle concerne les matériels d'émission et les matériels de réception fonctionnant en simplex ou en duplex.

Ajouter le texte de la note suivante:

NOTE – Il est admis que des limitations de fréquence se trouvent dans certaines annexes. Celles-ci nécessitent un réexamen.

Page 16

Insérer, avant l'article 12 existant, le texte du nouvel article 12 suivant et renuméroter les autres articles.

12 Canaux d'essai normalisés

Si le matériel en essai peut fonctionner sur trois canaux ou plus, la mesure ou les essais seront effectués sur les canaux de fonctionnement situés à la fréquence radioélectrique la plus basse et la plus élevée ainsi que sur le canal de fréquence la plus basse qui est le plus proche du centre de la bande radioélectrique de fonctionnement.

Copyright International Electrotechnical Commission
Provided by IHS under license with IEC
No reproduction or networking permitted without license from IHS Not for Resale

FOREWORD

This amendment has been prepared by subcommittee 12F: Equipment used in the mobile services, of IEC technical committee 12: Radiocommunications.

The text of this amendment is based on the following document:

FDIS	Reports on votig
12F(CO)140 12F(CO)141 12F(CO)142	12F(CO)146 12F(CO)150 12F(CO)151

Full information on the voting for the approval of this amendment can be found in the reports on voting indicated in the above table.

Page 3

CONTENTS

Insert, before the existing clause 12, the following new clause 12:

12 Standard test channels

Renumber the existing clause 12 and the subsequent clauses accordingly.

Page 7

1 Scope

Replace, the text of the second paragraph by the following:

This standard is restricted to land and mobile stations in the mobile services and to portable and personal equipment which may operate in one or more radio-frequency channels and is intended for the transmission and the reception, either in a simplex or a duplex mode, of emissions.

Add, the text of the following note:

NOTE – It is recognized that certain appendices have frequency limitations stated. These need to be reviewed.

Page 17

Insert, before the existing clause 12, the text of the following new clause 12 and renumber the subsequent clauses accordingly:

12 Standard test channels

If the equipment under test can operate on three or more channels, the measurement or tests will be made on the lowest and highest r.f. operating channels and on the lowest channel nearest to the centre of the r.f. operating band.

Copyright International Electrotechnical Commission
Provided by IHS under license with IEC
No reproduction or networking permitted without license from IHS Not for Resale

Publications de la CEI préparées par le Comité d'Etudes n° 12

215: — Règles de sécurité applicables aux matériels d'émission radioélectrique.
Amendement n° 1 (1990).
Amendement n° 2 (1993).

244: — Méthodes de mesure applicables aux émetteurs radioélectriques.

244-1 (1968) Première partie: Conditions générales de mesure, fréquence, puissance de sortie et puissance consommée.
Modification n° 2 (1989).

244-1A (1968) Premier complément: Annexes.
Modification n° 1 (1973).

244-2 (1969) Deuxième partie: Largeur de bande, puissance hors bande et puissance des oscillations non essentielles.
Modification n° 1 (1974).

244-2A (1969) Premier complément: Annexes.
Modification n° 1 (1973).

244-2B (1969) Deuxième complément: Signaux modulants pour la mesure de la largeur de bande et de la puissance hors bande d'émetteurs de radiotéléphonie et de radiodiffusion sonore.

244-3 (1972) Troisième partie: Modulation utile et modulation parasite.

244-3A (1971) Premier complément: Annexes.

244-3B (1972) Deuxième complément: Modulation parasite.

244-4 (1973) Quatrième partie: Caractéristiques amplitude/fréquence et distorsion de non-linéarité dans les émetteurs de radiotéléphonie et de radiodiffusion sonore.

244-4A (1976) Premier complément: Section trois.

244-5 (1992) Partie 5: Qualités de fonctionnement des émetteurs de télévision.

244-6 (1976) Sixième partie: Rayonnement des structures aux fréquences comprises entre 130 kHz et 1 GHz.

244-7 (1979) Septième partie: Rayonnement des structures aux fréquences supérieures à 1 GHz.

244-7A (1980) Premier complément: Section quatre: Emetteurs de moyennes dimensions – Section cinq: Gros émetteurs.

244-8 (1993) Partie 8: Qualité de fonctionnement des démodulateurs à bande latérale résiduelle utilisés pour les essais des émetteurs et réémetteurs de télévision.

244-9 (1993) Partie 9: Qualité de fonctionnement des réémetteursde télévision.

244-10 (1986) Dixième partie: Méthodes de mesure applicables aux émetteurs et réémetteurs de télévision, et utilisant les signaux d'insertion.

244-11 (1989) Onzième partie: Réémetteurs pour la radiodiffusion sonore à modulation de fréquence.

244-12-1 (1989) Douzième partie: Guide de rédaction des feuilles de spécification des émetteurs et des réémetteurs de télévision et de radiodiffusion sonore – Caractéristiques à spécifier.

244-12-2 (1989) Douzième partie: Guide de rédaction des feuilles de spécification des émetteurs et des réémetteurs de télévision et de radiodiffusion sonore – Feuilles de spécification.

244-13 (1991) Partie 13: Qualités de fonctionnement des émetteurs de radiodiffusion sonore à modulation de fréquence.

487: — Méthodes de mesure applicables au matériel utilisé dans les faisceaux hertziens terrestres.

487-1 (1984) Première partie: Mesures communes aux sous-ensembles et aux liaisons simulées.

(suite)

IEC publications prepared by Technical Committee No. 12

215: — Safety requirements for radio transmitting equipment.
Amendment No. 1 (1990).
Amendment No. 2 (1993).

244: — Methods of measurement for radio transmitters.

244-1 (1968) Part 1: General conditions of measurement, frequency, output power and power consumption.
Amendment No. 2 (1989).

244-1A (1968) First supplement: Appendices.
Amendment No. 1 (1973).

244-2 (1969) Part 2: Bandwidth, out-of-band power and power of non-essential oscillations.
Amendment No. 1 (1974).

244-2A (1969) First supplement: Appendices.
Amendment No. 1 (1973).

244-2B (1969) Second supplement: Modulating signals for the measurement of bandwidth and out-of-band power of transmitters for telephony and sound broadcasting.

244-3 (1972) Part 3: Wanted and unwanted modulation.

244-3A (1971) First supplement: Appendices.

244-3B (1972) Second supplement: Unwanted modulation, including hum and noise modulation.

244-4 (1973) Part 4: Amplitude/frequency characteristics and non-linearity distortion in transmitters for radiotelephony and sound broadcasting.

244-4A (1976) First supplement: Section Three.

244-5 (1992) Part 5: Performance characteristics of television transmitters.

244-6 (1976) Part 6: Cabinet radiation at frequencies between 130 kHz and 1 GHz.

244-7 (1979) Part 7: Cabinet radiation at frequencies above 1 Ghz.

244-7A (1980) First supplement: Section Four: Medium-sized transmitters – Section Five: Large transmitters.

244-8 (1993) Part 8: Performance characteristics of vestigial-sideband demodulators used for testing television transmitters and transposers.

244-9 (1993) Part 9: Performance characteristics for television transposers.

244-10 (1986) Part 10: Methods of measurement for television transmitters and transposers employing insertion test signals.

244-11 (1989) Part 11: Transposers for FM sound broadcasting.

244-12-1 (1989) Part 12: Guideline for drawing up descriptive leaflets for transmitters and transposers for sound and television broadcasting – Characteristics to be specified.

244-12-2 (1989) Part 12: Guideline for drawing up descriptive leaflets for transmitters and transposers for sound and television broadcasting – Specification sheets.

244-13 (1991) Part 13: Performance characteristics for FM sound broadcasting.

487: — Methods of measurement for equipment used in terrestrial radio-relay systems.

487-1 (1984) Part 1: Measurements common to sub-systems and simulated radio-relay systems.

(continued)

Copyright International Electrotechnical Commission
Provided by IHS under license with IEC
No reproduction or networking permitted without license from IHS
Not for Resale

Publications de la CEI préparées par le Comité d'Etudes n° 12 *(suite)*

487-2: — Deuxième partie: Mesures sur les sous-ensembles.

487- 2-1 (1981) Section un: Généralités.

487-2-2 (1981) Section deux: Matériel de commutation sur canal de secours.

487-2-3 (1984) Section trois: Dispositifs de branchement aux fréquences radioélectriques.

487-2-4 (1984) Section quatre: Modulateurs de fréquence.

487-2-5 (1984) Section cinq: Démodulateurs de fréquence.

487-2-6 (1984) Section six: Matériel pour le fonctionnement en diversité, en double canal, en monocanal avec secours actif.

487-2-7 (1986) Section sept: Emetteurs radioélectriques.

487-2-8 (1986) Section huit: Récepteurs radioélectriques.

487-3 (1975) Troisième partie: Liaisons simulées.

487-3-2 (1981) Section deux: Mesures en bande de base.

487-3-3 (1981) Section trois: Mesures concernant la transmission de la télévision monochrome ou en couleur.

487-3-4 (1982) Section quatre: Mesures pour la transmission de la téléphonie multivoie à m.r.f.

487-3-5 (1982) Section cinq: Mesure des brouillages mutuels.

487-3-6 (1984) Section six: Mesures concernant la transmission de la modulation sonore.

489: — Méthodes de mesure applicables au matériel de radiocommunication utilisé dans les services mobiles.

489-1 (1983) Première partie: Définitions générales et conditions normales de mesure.
Amendement 1 1996.

489-2 (1991) Deuxième partie: Emetteurs utilisant les émissions A3E, F3E ou G3E.

489-3 (1988) Troisième partie: Récepteurs conçus pour les émissions A3E ou F3E.

489-4 (1991) Quatrième partie: Emetteurs conçus pour les émissions à bande latérale unique (R3E, H3E ou J3E).

489-5 (1987) Cinquième partie: Récepteurs conçus pour les émissions à bande latérale unique (R3E, H3E ou J3E).

489-6 (1987) Sixième partie: Matériel d'appel sélectif et matériel numérique.
Modification n° 1 (1989).
Amendement n° 2 (1991).

489-8 (1984) Huitième partie: Méthodes de mesure applicables aux antennes.

491 (1984) Règles de sécurité pour les appareils électroniques à éclairs pour la photographie.

510: — Méthodes de mesure pour les équipements radioélectriques utilisés dans les stations terriennes de télécommunication par satellites.

510-1 (1975) Première partie: Généralités.

510-1A (1980) Premier complément: Paragraphe 6.2: Conditions concernant les sources de courant continu.

510-1-2 (1984) Section deux: Mesures dans la bande de fréquences radioélectriques.

510-1-3 (1980) Section trois: Mesures dans la bande des fréquences intermédiaires.
Modification n° 1 (1988).

510-1-4 (1986) Section quatre: Mesures en bande de base.

510-1-5 (1988) Section cinq: Mesures de température du bruit.

510-2: — Deuxième partie: Mesures sur les sous-ensembles.

510-2-1 (1978) Section un: Généralités – Section deux: Antenne, ensemble d'excitation hyperfréquence inclus.
Modification n° 1 (1989).

510-2-3 (1989) Section trois: Amplificateurs à faible bruit.

510-2-4 (1988) Section quatre: Convertisseurs élévateurs et abaisseurs de fréquence.

(suite)

IEC publications prepared by Technical Committee No. 12 *(continued)*

487-2: — Part 2: Measurements for sub-systems.

487- 2-1 (1981) Section One: General

487-2-2 (1981) Section Two: Stand-by channel switching equipment.

487-2-3 (1984) Section Three: R.F. branching networks.

487-2-4 (1984) Section Four: Frequency modulators.

487-2-5 (1984) Section Five: Frequency demodulators.

487-2-6 (1984) Section Six: Diversity, twin-path and hot stand-by equipment.

487-2-7 (1986) Section Seven: Radio transmitters.

487-2-8 (1986) Section Eight: Radio receivers.

487-3 (1975) Part 3: Simulated systems.

487-3-2 (1981) Section Two: Measurements in the baseband.

487-3-3 (1981) Section Three: Measurements for monochrome and colour television transmission.

487-3-4 (1982) Section Four: Measurements for f.d.m. transmission.

487-3-5 (1982) Section Five: Measurement of mutual interference.

487-3-6 (1984) Section Six: Measurements for sound programme transmission.

489: — Methods of measurement for radio equipment used in the mobile services.

489-1 (1983) Part 1: General definitions and standard conditions of measurement.
Amendment 1 (1996).

489-2 (1991) Part 2: Transmitters employing A3E, F3E or G3E emissions.

489-3 (1988) Part 3: Receivers for A3E or F3E emissions.

489-4 (1991) Part 4: Transmitters employing single-sideband emissions (R3E, H3E or J3E).

489-5 (1987) Part 5: Receivers employing single-sideband techniques (R3E, H3E or J3E).

489-6 (1987) Part 6: Selective calling and data equipment.
Amendment No. 1 (1989).
Amendment No. 2 (1991).

489-8 (1984) Part 8: Methods of measurement for antennas.

491 (1984) Safety requirements for electronic flash apparatus for photographic purposes.

510: — Methods of measurement for radio equipment used in satellite earth stations.

510-1 (1975) Part 1: General.

510-1A (1980) First supplement: Sub-clause 6.2: D.C. source conditions.

510-1-2 (1984) Section Two: Measurements in the r.f. range.

510-1-3 (1980) Section Three: Measurements in the i.f. range.
Amendment No. 1 (1988).

510-1-4 (1986) Section Four: Measurements in the baseband.

510-1-5 (1988) Section Five: Noise temperature measurements.

510-2: — Part 2: Measurements for sub-systems.

510-2-1 (1978) Section One: General – Section Two: Antenna (including feed network).
Amendment No. 1 (1989).

510-2-3 (1989) Section Three: Low noise amplifier.

510-2-4 (1988) Section Four: Up- and down-converters.

(continued)

Copyright International Electrotechnical Commission
Provided by IHS under license with IEC
No reproduction or networking permitted without license from IHS
Not for Resale

Publications de la CEI préparées par le Comité d'Etudes n° 12 *(suite)*

510-2-5 (1992) Section cinq: Modulateurs de fréquence.
510-2-6 (1992) Section six: Démodulateurs de fréquence.
510-2-7 (1989) Section sept: Amplificateur de forte puissance.
510-3: — Troisième partie: Méthodes de mesure applicables aux combinaisons de sous-ensembles.
510-3-1 (1981) Section un: Généralités.
510-3-2 (1980) Section deux: Mesures du facteur de qualité (G/T) du système de réception dans la gamme de 4 GHz à 6 GHz.
510-3-3 (1988) Section trois: Mesures pour la transmission de la télévision monochrome ou en couleur.
510-3-4 (1992) Section quatre: Mesures pour la transmission de la téléphonie multivoie à multiplexage par répartition en fréquence (m.r.f.).
657 (1979) Dangers des rayonnements non ionisants dans la gamme de fréquences de 10 MHz à 300 000 MHz.
835: — Méthodes de mesure applicables au matériel utilisé pour les systèmes de transmission numérique en hyperfréquence.
835-1-1 (1990) Première partie: Mesures communes aux faisceaux hertziens terrestres et aux stations terriennes de télécommunications par satellite – Section un: Généralités.
835-1-2 (1992) Section deux: Caractéristiques de base. Amendement 1 (1995).
835-1-3 (1992) Section trois: Caractéristiques de transmission. Amendement 1 (1995).
835-1-4 (1992) Section quatre: Qualité de transmission Amendement 1 (1995).
835-2-1 (1990) Deuxième partie: Mesures applicables aux faisceaux hertziens terrestres – Section un: Généralités.
835-2-2 (1994) Section 2: Antenne.
835-2-3 (1992) Section trois: Dispositifs de branchement aux fréquences radioélectriques.
835-2-4 (1993) Partie 2: Mesures applicables aux faisceaux hertziens terrestres – Section 4: Emetteur/ récepteur, modulateur/démodulateur inclus.
835-2-5 (1993) Partie 2: Mesures applicables aux faisceaux hertziens terrestres – Section 5: Sous-ensemble de traitement du signal numérique.
835-2-6 (1995) Partie 2: Mesures applicables aux faisceaux hertziens terrestres – Section 6: Commutation de protection.
835-2-7 (1994) Partie 2: Mesures applicables aux faisceaux hertziens terrestres – Section 7: Equipement de diversité par commutation et combinaison.
835-2-8 (1993) Partie 2: Mesures applicables aux faisceaux hertziens terrestres – Section 8: Egaliseur auto-adaptatif. Amendement 1 (1996).
835-2-9 (1995) Partie 2: Mesures applicables aux faisceaux hertziens terrestres – Section 9: Voie de service.
835-2-10 (1992) Partie 2: Mesures applicables aux faisceaux hertziens terrestres. Section dix: Performance globale du système.
835-3-1 (1990) Troisième partie: Mesures applicables aux stations terriennes de télécommunications par satellite – Section un: Généralités.
835-3-2 (1995) Partie 3: Mesures applicables aux stations terriennes de télécommunications par satellite – Section 2: Antenne.
835-3-4 (1993) Partie 3: Mesures applicables aux stations terriennes de télécommunications par satellite – Section 4: Amplificateur à faible bruit.

(suite)

IEC publications prepared by Technical Committee No. 12 *(continued)*

510-2-5 (1992) Section five: Frequency modulators.
510-2-6 (1992) Section six: Frequency demodulators.
510-2-7 (1989) Section Seven: High-power amplifier.
510-3: — Part 3: Methods of measurement on combinations of subsystems.
510-3-1 (1981) Section One: General.
510-3-2 (1980) Section Two: Measurement of the figure of merit (G/T) of the receiving system in the 4 GHz to 6 GHz range.
510-3-3 (1988) Section Three: Measurements for monochrome and colour television transmission.
510-3-4 (1992) Section four: Measurements for frequency division multiplex (f.d.m.) transmission.
657 (1979) Non-ionizing radiation hazards in the frequency range from 10 MHz to 300 000 MHz.
835: — Methods of measurement for equipment used in digital microwave radio transmission systems.
835-1-1 (1990) Part 1: Measurements common to terrestrial radio-relay systems and satellite earth stations – Section one: General.
835-1-2 (1992) Section two: Basic characteristics. Amendment 1 (1995).
835-1-3 (1992) Section three: Transmission characteristics. Amendment 1 (1995).
835-1-4 (1992) Section four: Transmission performance. Amendment 1 (1995).
835-2-1 (1990) Part 2: Measurements on terrestrial radio-relay systems – Section one: General.
835-2-2 (1994) Section 2: Antenna.
835-2-3 (1992) Section three: R.F. branching-networks.
835-2-4 (1993) Part 2: Measurements on terrestrial radio-relay systems – Section 4: Transmitter/receiver including modulator/demodulator.
835-2-5 (1993) Part 2: Measurements on terrestrial radio-relay systems – Section 5: Digital signal processing subsystem.
835-2-6 (1995) Part 2: Measurements on terrestrial radio-relay systems – Section 6: Protection switching.
835-2-7 (1994) Part 2: Measurements on terrestrial radio-relay systems – Section 7: Diversity switching and combining equipment.
835-2-8 (1993) Part 2: Measurements on terrestrial radio-relay systems – Section 8: Adaptive equalizer. Amendment 1 (1996).
835-2-9 (1995) Part 2: Measurements on terrestrial radio-relay systems – Section 9: Service channel.
835-2-10 (1992) Part 2: Measurements on terrestrial radio-relay systems. Section ten: Overall system performance.
835-3-1 (1990) Part 3: Measurements on satellite earth stations – Section One: General.
835-3-2 (1995) Part 3: Measurements on satellite earth stations – Section 2: Antenna.
835-3-4 (1993) Part 3: Measurements on satellite earth stations – Section 4: Low-noise amplifier.

(continued)

Copyright International Electrotechnical Commission
Provided by IHS under license with IEC
No reproduction or networking permitted without license from IHS
Not for Resale

Publications de la CEI préparées par le Comité d'Etudes n° 12 *(suite)*

835-3-5 (1994) Partie 3: Mesures applicables aux stations terriennes de télécommunications par satellite – Section 5: Convertisseurs élévateurs et abaisseurs de fréquence.

835-3-6 (1996) Partie 3: Mesures applicables aux stations terriennes de télécommunications par satellite – Section 6: Amplificateurs de puissance.

835-3-7 (1995) Partie 3: Mesures applicables aux stations terriennes de télécommunications par satellite – Section 7: Facteur de qualité du système de réception.

835-3-9 (1993) Partie 3: Mesures applicables aux stations terriennes de télécommunications par satellite – Section 9: Equipement terminal SCPC-MDP.

835-3-10 (1994) Partie 3: Mesures applicables aux stations terriennes de télécommunications par satellite – Section 10: Equipement terminal – Station terrienne de trafic AMRT.

835-3-11 (1995) Partie 3: Measures applicables aux stations terriennes de télécommunications par satellite – Section 11: Equipement de voie de service pour transmission SCPC-MDP.

835-3-12 (1993) Partie 3: Mesures applicables aux stations terriennes de télécommunications par satellite – Section 12: Performance globale du système.

835-3-13 (1996) Partie 3: Mesures applicables aux stations terriennes de télécommunications par satellite – Section 13: Systèmes VSAT.

835-3-14 (1996) Partie 3: Mesures applicables aux stations terriennes de télécommunications par satellite – Section 14: Stations terriennes pour le reportage d'actualités par satellite (RAS).

864: — Normalisation des interconnexions entre les émetteurs ou les systèmes d'émetteurs de radiodiffusion et les systèmes de télésurveillance.

864-1 (1986) Première partie: Normes d'interface pour les systèmes à interconnexions câblées.
Modification n° 1 (1987).

1149 (1995) Guide pour le maniement et le fonctionnement en sécurité du matériel mobile de radiocommunication.

IEC publications prepared by Technical Committee No. 12 *(continued)*

835-3-5 (1994) Part 3: Measurements on satellite earth stations – Section 5: Up- and down-converters.

835-3-6 (1996) Part 3: Measurements on satellite earth stations – Section 6: High-power amplifiers.

835-3-7 (1995) Part 3: Measurements on satellite earth stations – Section 7: Figure-of-merit of receiving system.

835-3-9 (1993) Part 3: Measurements on satellite earth stations – Section 9: Terminal equipment SCP-PSR.

835-3-10 (1994) Part 3: Measurements on satellite earth stations – Section 10: Terminal equipment – TDMA traffic earth station.

835-3-11 (1995) Part 3: Measurements on satellite earth stations – Section 11: Service channel equipment for SCPC-PSK transmission.

835-3-12 (1993) Part 3: Measurements on satellite earth stations – Section 12: Overall system performance.

835-3-13 (1996) Part 3: Measurements on satellite earth stations – Section 13: VSAT systems

835-3-14 (1996) Part 3: Measurements on satellite earth stations – Section 14: Earth stations for satellite news gathering (SNG).

864: — Standardization of interconnections between broadcasting transmitters or transmitter systems and supervisory equipment.

864-1 (1986) Part 1: Interface standards for systems using dedicated interconnections.
Amendment No. 1 (1987).

1149 (1995) Guide for safe handling and operation of mobile radio equipment.

Publication 489-1

ICS 33.060.50

Typeset and printed by the IEC Central Office
GENEVA, SWITZERLAND

Copyright International Electrotechnical Commission
Provided by IHS under license with IEC
No reproduction or networking permitted without license from IHS
Not for Resale

IEC 489 PT*1 83 ■ 4844891 0045440 5 ■

COMMISSION ÉLECTROTECHNIQUE INTERNATIONALE

NORME DE LA CEI

INTERNATIONAL ELECTROTECHNICAL COMMISSION

IEC STANDARD

Publication 489-1

Deuxième édition — Second edition

1983

Méthodes de mesure applicables au matériel de radiocommunication utilisé dans les services mobiles

Première partie: Définitions générales et conditions normales de mesure

Methods of measurement for radio equipment used in the mobile services

Part 1: General definitions and standard conditions of measurement

© CEI 1983

Droits de reproduction réservés — Copyright - all rights reserved

Bureau Central de la Commission Electrotechnique Internationale

3, rue de Varembé

Genève, Suisse

Copyright International Electrotechnical Commission
Provided by IHS under license with IEC
No reproduction or networking permitted without license from IHS

Not for Resale

Révision de la présente publication

Le contenu technique des publications de la CEI est constamment revu par la Commission afin d'assurer qu'il reflète bien l'état actuel de la technique.

Les renseignements relatifs à ce travail de révision, à l'établissement des éditions révisées et aux mises à jour peuvent être obtenus auprès des Comités nationaux de la CEI et en consultant les documents ci-dessous:

- **Bulletin de la CEI**
- **Annuaire de la CEI**
- **Catalogue des publications de la CEI**

  Publié annuellement

Terminologie

En ce qui concerne la terminologie générale, le lecteur se reportera à la Publication 50 de la CEI: Vocabulaire Electrotechnique International (VEI), qui est établie sous forme de chapitres séparés traitant chacun d'un sujet défini, l'Index général étant publié séparément. Des détails complets sur le VEI peuvent être obtenus sur demande.

Les termes et définitions figurant dans la présente publication ont été soit repris du VEI, soit spécifiquement approuvés aux fins de cette publication.

Symboles graphiques et littéraux

Pour les symboles graphiques, symboles littéraux et signes d'usage général approuvés par la CEI, le lecteur consultera:

— la Publication 27 de la CEI: Symboles littéraux à utiliser en électrotechnique;

— la Publication 117 de la CEI: Symboles graphiques recommandés.

Les symboles et signes contenus dans la présente publication ont été soit repris des Publications 27 ou 117 de la CEI, soit spécifiquement approuvés aux fins de cette publication.

Publications de la CEI établies par le même Comité d'Etudes

L'attention du lecteur est attirée sur les pages 3 et 4 de la couverture, qui énumèrent les publications de la CEI préparées par le Comité d'Etudes qui a établi la présente publication.

Revision of this publication

The technical content of IEC publications is kept under constant review by the IEC, thus ensuring that the content reflects current technology.

Information on the work of revision, the issue of revised editions and amendment sheets may be obtained from IEC National Committees and from the following IEC sources:

- **IEC Bulletin**
- **IEC Yearbook**
- **Catalogue of IEC Publications**

  Published yearly

Terminology

For general terminology, readers are referred to IEC Publication 50: International Electrotechnical Vocabulary (IEV), which is issued in the form of separate chapters each dealing with a specific field, the General Index being published as a separate booklet. Full details of the IEV will be supplied on request.

The terms and definitions contained in the present publication have either been taken from the IEV or have been specifically approved for the purpose of this publication.

Graphical and letter symbols

For graphical symbols, and letter symbols and signs approved by the IEC for general use, readers are referred to:

— IEC Publication 27: Letter symbols to be used in electrical technology;

— IEC Publication 117: Recommended graphical symbols.

The symbols and signs contained in the present publication have either been taken from IEC Publications 27 or 117, or have been specifically approved for the purpose of this publication.

IEC publications prepared by the same Technical Committee

The attention of readers is drawn to pages 3 and 4 of the cover, which list IEC publications issued by the Technical Committee which has prepared the present publication.

Copyright International Electrotechnical Commission
Provided by IHS under license with IEC
No reproduction or networking permitted without license from IHS
Not for Resale

IEC 489 PT*1 83 ■ 4844891 0045442 9 ■

COMMISSION ÉLECTROTECHNIQUE INTERNATIONALE

NORME DE LA CEI

INTERNATIONAL ELECTROTECHNICAL COMMISSION

IEC STANDARD

Publication 489-1

Deuxième édition — Second edition

1983

Méthodes de mesure applicables au matériel de radiocommunication utilisé dans les services mobiles

Première partie: Définitions générales et conditions normales de mesure

Methods of measurement for radio equipment used in the mobile services

Part 1: General definitions and standard conditions of measurement

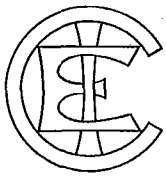

© CEI 1983

Droits de reproduction réservés — Copyright - all rights reserved

Aucune partie de cette publication ne peut être reproduite ni utilisée sous quelque forme que ce soit et par aucun procédé, électronique ou mécanique, y compris la photocopie et les microfilms, sans l'accord écrit de l'éditeur.

No part of this publication may be reproduced or utilized in any form or by any means, electronic or mechanical, including photocopying and microfilm, without permission in writing from the publisher.

Bureau Central de la Commission Electrotechnique Internationale

3, rue de Varembé

Genève, Suisse

Prix
Price Fr.s. 72.–

Copyright International Electrotechnical Commission
Provided by IHS under license with IEC
No reproduction or networking permitted without license from IHS

Not for Resale

IEC 489 PT*1 83 ■ 4844891 0045443 0 ■

SOMMAIRE

Pages

PRÉAMBULE 4

PRÉFACE 4

Articles

1. Domaine d'application 6
2. Objet 6

SECTION UN – TERMINOLOGIE

3. Termes généraux et définitions 8
4. Termes et définitions relatifs au matériel 12
5. Termes et définitions relatifs aux caractéristiques du matériel 14

SECTION DEUX – CONDITIONS GÉNÉRALES DE MESURE

6. Dispositions générales concernant les appareils de mesure 14
7. Conditions normales d'essai 14

SECTION TROIS – CONDITIONS DE FONCTIONNEMENT

8. Matériel principal 16
9. Appareils associés 16
10. Dispositifs auxiliaires spéciaux 16
11. Modulation normale d'essai 16
12. Conditions supplémentaires de fonctionnement 16

SECTION QUATRE – CONDITIONS NORMALES CONCERNANT LA SOURCE D'ÉNERGIE

13. Généralités 18
14. Tension continue normale d'essai pour matériel alimenté par accumulateurs normalement en charge pendant le fonctionnement du matériel (catégorie A) 18
15. Tension continue normale d'essai pour matériel alimenté par piles ou par accumulateurs non en charge pendant le fonctionnement du matériel (catégories B et C) 20
16. Tension alternative et fréquence normales pour matériel utilisant d'autres sources d'énergie 20
17. Tension continue normale d'essai pour matériel portatif sur véhicule (catégorie A/B) 22

SECTION CINQ – CONDITIONS ATMOSPHÉRIQUES NORMALES

18. Généralités 22
19. Conditions atmosphériques normales d'essai 22
20. Conditions atmosphériques normales de référence 24
21. Conditions atmosphériques normales d'arbitrage 24

SECTION SIX – FACTEUR D'UTILISATION NORMAL SUR UN JOUR

22. Fonctionnement permanent des matériels de station de base ou sur véhicule (catégorie A) 24
23. Fonctionnement intermittent des matériels sur véhicule (catégorie A) 26
24. Fonctionnement intermittent des matériels portatifs et des matériels personnels (catégories A/B, B et C) 26

SECTION SEPT – ESTIMATION DES POSSIBILITÉS DU MATÉRIEL DANS DES CONDITIONS DIFFÉRENTES DES CONDITIONS NORMALES D'ESSAI

25. Généralités 26

SECTION HUIT – MESURES INITIALES DANS LES CONDITIONS NORMALES D'ESSAI

26. Généralités 28
27. Variations de tension de la source d'énergie entre les limites de la plage spécifiée 28
28. Plage de températures 30
29. Humidité 32
30. Autres conditions d'environnement 34

SECTION NEUF – DURÉE DE VIE UTILE DE LA BATTERIE

31. Domaine d'application 48
32. Définitions 48
33. Conditions de mesure 48
34. Méthode de mesure 48
35. Présentation des résultats 50

SECTION DIX – DIMENSIONS ET POIDS

36. Définition des dimensions 50
37. Méthode de mesure 50
38. Définition du poids 50
39. Méthode de mesure 50

Copyright International Electrotechnical Commission
Provided by IHS under license with IEC
No reproduction or networking permitted without license from IHS
Not for Resale

CONTENTS

Page

FOREWORD 5

PREFACE 5

Clause

1. Scope 7
2. Object 7

SECTION ONE – TERMINOLOGY

3. General terms and definitions 9
4. Terms and definitions related to the equipment 13
5. Terms and definitions related to the perfomance of the equipment 15

SECTION TWO – GENERAL CONDITIONS OF MEASUREMENT

6. General requirements concerning the measuring equipment 15
7. Standard test conditions 15

SECTION THREE – OPERATING CONDITIONS

8. Basic equipment 17
9. Associated equipment 17
10. Special function sub-systems 17
11. Standard test modulation 17
12. Supplementary operating conditions 17

SECTION FOUR – STANDARD CONDITIONS FOR THE PRIMARY POWER SUPPLY

13. General 19
14. Standard d.c. test voltage for equipment supplied by accumulator batteries which are normally charged when the equipment is in operation (Category A) 19
15. Standard d.c. test voltage for equipment supplied either by primary cells or batteries, or accumulator batteries which are not charged while the equipment is in operation (Categories B and C) 21
16. Standard a.c. voltage and frequency for equipment using other power supplies 21
17. Standard d.c. test voltage for portable vehicle equipment (Category A/B) 23

SECTION FIVE – STANDARD ATMOSPHERIC CONDITIONS

18. General 23
19. Standard atmospheric testing conditions 23
20. Standard atmospheric reference conditions 25
21. Standard atmospheric referee conditions 25

SECTION SIX – STANDARD DAILY DUTY-CYCLE CONDITIONS

22. Continuous operation of base equipment or vehicle equipment (Category A) 25
23. Intermittent operation of vehicle equipment (Category A) 27
24. Intermittent operation of portable and personal equipment (Categories A/B, B and C) 27

SECTION SEVEN – EVALUATION OF THE PERFORMANCE OF THE EQUIPMENT UNDER CONDITIONS DEVIATING FROM STANDARD TEST CONDITIONS

25. General 27

SECTION EIGHT – INITIAL MEASUREMENTS UNDER STANDARD TEST CONDITIONS

26. General 29
27. Variation of primary power supply voltage range within the specified range 29
28. Temperature range 31
29. Humidity 33
30. Other environmental conditions 35

SECTION NINE – USEFUL BATTERY LIFE

31. Scope 49
32. Definitions 49
33. Conditions of measurement 49
34. Method of measurement 49
35. Presentation of the results 51

SECTION TEN – SIZE AND WEIGHT

36. Definition of size 51
37. Method of measurement 51
38. Definition of weight 51
39. Method of measurement 51

Copyright International Electrotechnical Commission
Provided by IHS under license with IEC
No reproduction or networking permitted without license from IHS

Not for Resale

IEC 489 PT*1 83 ■ 4844891 0045445 4 ■

COMMISSION ÉLECTROTECHNIQUE INTERNATIONALE

MÉTHODES DE MESURE APPLICABLES AU MATÉRIEL DE RADIOCOMMUNICATION UTILISÉ DANS LES SERVICES MOBILES

Première partie: Définitions générales et conditions normales de mesure

PRÉAMBULE

1) Les décisions ou accords officiels de la CEI en ce qui concerne les questions techniques, préparés par des Comités d'Etudes où sont représentés tous les Comités nationaux s'intéressant à ces questions, expriment dans la plus grande mesure possible un accord international sur les sujets examinés.

2) Ces décisions constituent des recommandations internationales et sont agréées comme telles par les Comités nationaux.

3) Dans le but d'encourager l'unification internationale, la CEI exprime le vœu que tous les Comités nationaux adoptent dans leurs règles nationales le texte de la recommandation de la CEI, dans la mesure où les conditions nationales le permettent. Toute divergence entre la recommandation de la CEI et la règle nationale correspondante doit, dans la mesure du possible, être indiquée en termes clairs dans cette dernière.

PRÉFACE

La présente norme a été établie par le Sous-Comité 12F: Matériels utilisés dans les services mobiles, du Comité d'Etudes n° 12 de la CEI: Radiocommunications.

Elle constitue la deuxième édition de la Publication 489-1 de la CEI et comprend le texte de la première édition dont l'article 30, traitant des autres conditions d'environnement, a été modifié.

Un premier projet fut discuté lors de la réunion tenue à Tokyo en 1980. A la suite de cette réunion, un projet, document 12F(Bureau Central)65, fut soumis à l'approbation des Comités nationaux suivant la Règle des Six Mois en juin 1981.

Les Comités nationaux des pays ci-après se sont prononcés explicitement en faveur de la publication:

Afrique du Sud (République d')	Corée (République de)	République Démocratique Allemande
Allemagne	Espagne	Royaume-Uni
Australie	Etats-Unis d'Amérique	Suède
Belgique	France	Suisse
Bulgarie	Italie	
Canada	Japon	

Autres publications de la CEI citées dans la présente norme:

Publications n^{os}
- 51: Recommandations pour les appareils de mesure électriques indicateurs à action directe et leurs accessoires.
- 68-1: Essais fondamentaux climatiques et de robustesse mécanique, Première partie: Généralités et guide.
- 68-2-1: Deuxième partie: Essais. Essais A: Froid.
- 68-2-2: Essais B: Chaleur sèche.
- 68-2-3: Essai Ca: Essai continu de chaleur humide.
- 68-2-4: Essai D: Essai accéléré de chaleur humide.
- 68-2-6: Essai Fc et guide: Vibrations (sinusoïdales).
- 68-2-27: Essai Ea: Chocs.
- 68-2-32: Essai Ed: Chute libre.
- 215: Règles de sécurité applicables aux matériels d'émission radioélectrique.
- 244-1: Méthodes de mesure applicables aux émetteurs radioélectriques, Première partie: Conditions générales de mesure, fréquence, puissance de sortie et puissance consommée.

Copyright International Electrotechnical Commission
Provided by IHS under license with IEC
No reproduction or networking permitted without license from IHS
Not for Resale

INTERNATIONAL ELECTROTECHNICAL COMMISSION

METHODS OF MEASUREMENT FOR RADIO EQUIPMENT USED IN THE MOBILE SERVICES

Part 1: General definitions and standard conditions of measurement

FOREWORD

1) The formal decisions or agreements of the IEC on technical matters, prepared by Technical Committees on which all the National Committees having a special interest therein are represented, express, as nearly as possible, an international consensus of opinion on the subjects dealt with.
2) They have the form of recommendations for international use and they are accepted by the National Committees in that sense.
3) In order to promote international unification, the IEC expresses the wish that all National Committees should adopt the text of the IEC recommendation for their national rules in so far as national conditions will permit. Any divergence between the IEC recommendation and the corresponding national rules should, as far as possible, be clearly indicated in the latter.

PREFACE

This standard has been prepared by Sub-Committee 12F: Equipment Used in the Mobile Services, of IEC Technical Committee No. 12: Radiocommunications.

It forms the second edition of IEC Publication 489-1 and comprises the text of the first edition with an amended Clause 30 dealing with other environmental conditions.

A first draft was discussed at the meeting held in Tokyo in 1980. As a result of this meeting, a draft, Document 12F(Central Office)65, was submitted to the National Committees for approval under the Six Months' Rule in June 1981.

The National Committees of the following countries voted explicitly in favour of publication:

Australia	Germany	Sweden
Belgium	Italy	Switzerland
Bulgaria	Japan	United Kingdom
Canada	Korea (Republic of)	United States of America
France	South Africa (Republic of)	
German Democratic Republic	Spain	

Other IEC publications quoted in this standard:

Publications Nos. 51: Recommendations for Direct Acting Indicating Electrical Measuring Instruments and Their Accessories.
68-1: Basic Environmental Testing Procedures, Part 1: General and Guidance.
68-2-1: Part 2: Tests. Tests A: Cold.
68-2-2: Tests B: Dry Heat.
68-2-3: Test Ca: Damp Heat, Steady State.
68-2-4: Test D: Accelerated Damp Heat.
68-2-6: Test Fc and Guidance: Vibration (Sinusoidal).
68-2-27: Test Ea: Shock.
68-2-32: Test Ed: Free Fall.
215: Safety Requirements for Radio Transmitting Equipment.
244-1: Methods of Measurement for Radio Transmitters, Part 1: General Conditions of Measurement, Frequency, Output Power and Power Consumption.

Copyright International Electrotechnical Commission
Provided by IHS under license with IEC
No reproduction or networking permitted without license from IHS
Not for Resale

IEC 489 PT*1 83 ■ 4844891 0045447 8 ■

MÉTHODES DE MESURE APPLICABLES AU MATÉRIEL DE RADIOCOMMUNICATION UTILISÉ DANS LES SERVICES MOBILES

Première partie: Définitions générales et conditions normales de mesure

---

1. Domaine d'application

La présente norme s'applique au matériel radioélectrique d'émission et de réception et aux systèmes utilisés dans les services mobiles.

La présente norme est limitée aux stations terrestres et mobiles des services mobiles et aux matériels portatifs et personnels qui peuvent fonctionner sur une ou plusieurs voies de transmission situées dans les bandes de fréquences inférieures à 1000 MHz; elle concerne les matériels d'émission et les matériels de réception fonctionnant en simplex ou en duplex et utilisés pour transmettre une seule voie d'information.

Dans cette norme, le terme «matériel» inclut le dispositif de commutation d'antenne ou le duplexeur, selon le cas, mais n'inclut pas:

- l'antenne ou le système d'antennes, sauf dans le cas des matériels qui comportent des antennes incorporées;
- le transducteur d'entrée de l'émetteur, et
- le transducteur de sortie du récepteur, sauf dans le cas des matériels qui comportent des transducteurs incorporés (voir note).

Note. – Les possibilités du matériel dépendent des caractéristiques du transducteur d'entrée et du transducteur de sortie. Le relevé des caractéristiques de ces transducteurs peut faire l'objet de mesures spéciales qui sortent du cadre de cette norme.

Cette norme prévoit également les essais de certains sous-ensembles spéciaux (voir article 10).

2. Objet

La présente norme appartient à une série de publications qui, lorsqu'elle sera complète, aura pour objet de décrire les conditions et méthodes normales de mesure à utiliser pour relever les caractéristiques et déterminer les qualités fonctionnelles du matériel utilisé dans les services mobiles, et de rendre ainsi possible la comparaison des résultats des mesures effectuées par différents observateurs.

La présente norme concerne les méthodes détaillées, sélectionnées et recommandées pour effectuer des mesures permettant d'évaluer les propriétés essentielles de l'équipement. Il n'est pas obligatoire de procéder à la mesure de toutes les caractéristiques indiquées. Si l'on souhaite ou si l'on doit procéder à la mesure de caractéristiques supplémentaires, on se conformera de préférence aux normes établies par d'autres Comités d'Etudes ou Sous-comités de la CEI ou par d'autres organismes internationaux habilités.

Il ne sera pas généralement spécifié de valeurs limites admissibles des différentes grandeurs, correspondant à un fonctionnement acceptable du matériel; ces valeurs apparaîtront habituellement dans le cahier des charges du matériel considéré ou dans les prescriptions établies par les organismes de réglementation responsables.

Les méthodes de mesure mentionnées dans cette norme concernent les essais de type et les essais de réception, suivant accord éventuel entre le constructeur et l'utilisateur, mais elles peuvent aussi être employées pour les essais de contrôle en usine.

Copyright International Electrotechnical Commission
Provided by IHS under license with IEC
No reproduction or networking permitted without license from IHS
Not for Resale

METHODS OF MEASUREMENT FOR RADIO EQUIPMENT USED IN THE MOBILE SERVICES

Part 1: General definitions and standard conditions of measurement

1. Scope

This standard applies to radio transmitting and receiving equipment and systems used in the mobile services.

This standard is restricted to land and mobile stations in the mobile services and to portable and personal equipment which may operate in one or more radio-frequency channels in the frequency range below 1000 MHz and is intended for the transmission and the reception, either in a simplex or a duplex mode, of emissions modulated by a single information channel.

In this standard, the equipment includes the aerial (antenna) change-over device or the duplexer, if used, but does not include:

- the aerial (antenna) or aerial (antenna) system except in the case of equipment using integral aerials (antennas);
- the input transducer of the transmitter;
- the output transducer of the receiver except in the case of equipment using integral transducers (see note).

Note. – The performance of the equipment depends upon that of the input and the output transducers used. Assessing the performance of these transducers may be the subject of separate measurements which are outside the scope of this standard.

This standard also provides for testing certain special sub-systems (see Clause 10).

2. Object

This standard belongs to a series of publications which, when completed, will describe recommended methods of measurement to be used to ascertain the characteristics and performance of equipment used in the mobile services and to make possible the comparison of the results of measurements made by different observers.

This standard applies to detailed methods of making measurements selected and recommended for assessing the essential properties of the equipment. It is not mandatory that measurements of all the defined characteristics be made. Either fewer or additional measurements may be appropriate. When additional measurements are desired or necessary, they preferably should be carried out in accordance with the standards laid down by other IEC Technical Committees or Sub-Committees or by other international bodies.

Limiting values of the various quantities for acceptable performance generally will not be specified, as these normally will be given in the relevant equipment specifications, or in requirements laid down by the responsible regulating bodies.

The methods of measurement mentioned in this standard are intended for type tests and acceptance tests, if these tests are agreed between manufacturer and user, but may also be used for factory tests.

Copyright International Electrotechnical Commission
Provided by IHS under license with IEC
No reproduction or networking permitted without license from IHS Not for Resale

SECTION UN – TERMINOLOGIE

3. Termes généraux et définitions

Certains des termes et définitions ci-dessous ont été repris de l'article 1 du Règlement des radiocommunications de l'UIT, édition de 1982. Ils sont identifiés par le numéro de la définition du Règlement des radiocommunications. Les numéros de référence du Vocabulaire Electrotechnique International (VEI) ont été ajoutés lorsque les définitions étaient conformes à celles du VEI.

3.1 *Type*

Un type englobe des produits ayant des caractéristiques de construction analogues, fabriqués suivant les mêmes techniques, et dont les caractéristiques figurent dans la gamme habituelle (voir notes 2 et 3) du constructeur pour les produits considérés.

Notes 1. – Il n'est pas tenu compte des dispositifs accessoires de montage, pour autant qu'ils n'aient pas d'influence sensible sur les résultats des essais.

2. – Par «caractéristiques», il faut entendre, considérés dans leurs ensemble:
a) les caractéristiques électriques;
b) les dimensions;
c) le degré de résistance aux contraintes climatiques et mécaniques.

3. – Il convient que les limites de la gamme des caractéristiques fassent l'objet d'un accord entre constructeur et acheteur.

3.2 *Essais de type*

Série complète d'essais à effectuer sur un certain nombre de spécimens représentatifs du type, afin de déterminer si un constructeur donné peut être considéré comme étant en mesure de fabriquer des produits répondant aux spécifications.

3.3 *Essais de réception*

Essais effectués pour décider de l'acceptation d'un lot sur la base d'un accord entre constructeur et utilisateur.

Cet accord doit préciser:
a) la taille de l'échantillon;
b) le choix des essais;
c) dans quelle mesure les spécimens soumis aux essais devront répondre aux prescriptions établies pour des essais spécifiés.

Note. – Dans le cas où des résultats d'essais ne concorderaient pas, les méthodes d'essais normales de la CEI devront être employées pour les essais de réception.

3.4 *Essais de contrôle en usine*

Essais effectués par le constructeur pour vérifier que ses produits correspondent aux spécifications.

3.5 *Service mobile*

Service de radiocommunication entre stations mobiles et stations terrestres, ou entre stations mobiles (RR1-3.7):

a) service mobile aéronautique: service mobile entre stations aéronautiques et stations d'aéronef, ou entre stations d'aéronef, auquel les stations d'engin de sauvetage peuvent également participer (RR1-3.15);

Copyright International Electrotechnical Commission
Provided by IHS under license with IEC
No reproduction or networking permitted without license from IHS
Not for Resale

SECTION ONE – TERMINOLOGY

3. General terms and definitions

In the terms and definitions below, certain of them are quoted from Article 1 of the ITU Radio Regulations, edition of 1982. They are identified by the number of the Radio Regulations definition. The International Electrotechnical Vocabulary (IEV) reference number is added if the definitions conform to those given in the IEV.

3.1 *Type*

A type comprises products having similar design features, manufactured by the same techniques and falling within the manufacturer's usual range of ratings (see Notes 2 and 3) for these products.

Notes 1. – Mounting accessoires are ignored, provided they have no significant effect on the test results.

2. – "Ratings" cover the combinations of:
a) electrical ratings;
b) sizes;
c) behaviour under environmental stresses.

3. – The limits of the range of ratings should be agreed between manufacturer and purchaser.

3.2 *Type tests*

The complete series of tests to be carried out on a number of specimens representative of the type, with the object of determining whether a particular manufacturer can be considered capable of producing products meeting the specifications.

3.3 *Acceptance tests*

Tests carried out to determine the acceptability of a consignment on the basis of an agreement between user and manufacturer.

The agreement should cover:
a) the sample size;
b) the selection of tests;
c) the extent to which the test specimens should conform to the requirements for the selected tests of the specification.

Note. – In cases of divergent test results, the IEC standard test methods should be used for acceptance tests.

3.4 *Factory tests*

Tests carried out by the manufacturer to verify that his products meet the specification.

3.5 *Mobile service*

A service of radiocommunication between mobile and land stations, or between mobile stations (RR1-3.7):

a) aeronautical mobile service: a mobile service between aeronautical stations and aircraft stations, or between aircraft stations, in which survival craft stations may also participate (RR1-3.15);

Copyright International Electrotechnical Commission
Provided by IHS under license with IEC
No reproduction or networking permitted without license from IHS Not for Resale

IEC 489 PT*1 83 ■ 4844891 0045451 T ■

b) service mobile terrestre: service mobile entre stations de base et stations mobiles terrestres, ou entre stations mobiles terrestres (RR1-3.9);

c) service mobile maritime: service mobile entre stations côtières et stations de navire, ou entre stations de navire, auquel les stations d'engin de sauvetage peuvent également participer (RR1-3.11);

d) service des opérations portuaires: service mobile maritime dans un port ou au voisinage d'un port, entre stations côtières et stations de navire, ou entre stations de navire, ayant pour objet la transmission de messages traitant exclusivement de la manutention, du mouvement et de la sécurité des navires et, en cas d'urgence, de la sauvegarde des personnes. Sont exclus de ces messages ceux qui ont le caractère de correspondance publique (RR1-3.13).

3.6 *Station*

Un ou plusieurs émetteurs ou récepteurs, ou un ensemble d'émetteurs et de récepteurs, y compris les appareils accessoires, nécessaires pour assurer un service de radiocommunication à un emplacement donné. Chaque station est classée d'après le service auquel elle participe d'une façon permanente ou temporaire (RR1-4.1):

a) station terrestre: station du service mobile non destinée à être utilisée lorsqu'elle est en mouvement (RR1-4.10);

b) station aéronautique: station terrestre du service mobile aéronautique. Dans certains cas, une station aéronautique peut être placée à bord d'un navire ou d'un satellite de la terre (RR1-4.19);

c) station fixe aéronautique: station du service fixe aéronautique (RR1-4.7);

d) station de base: station terrestre du service mobile terrestre assurant un service avec des stations mobiles terrestres (RR1-4.11);

e) station côtière: station terrestre du service mobile maritime (RR1-4.13);

f) station de base fixe: station de base située de façon permanente en un point géographique connu et décrit de façon précise;

g) station mobile: station du service mobile destinée à être utilisée lorsqu'elle est en mouvement, ou pendant des haltes en des points non déterminés (RR1-4.8);

h) station d'aéronef: station mobile du service mobile aéronautique installée à bord d'un aéronef ou d'un véhicule aérospatial (RR1-4.21);

i) station mobile terrestre: station mobile du service mobile terrestre susceptible de se déplacer en surface à l'intérieur des limites géographiques d'un pays ou d'un continent (RR1-4.12);

j) station de navire: station mobile du service mobile maritime placée à bord d'un navire, autre qu'un engin de sauvetage, et qui n'est pas amarré en permanence (RR1-4.15);

k) station d'engin de sauvetage: station mobile du service mobile maritime ou aéronautique destinée uniquement aux besoins des naufragés et placée sur une embarcation, un radeau ou tout autre équipement de sauvetage (RR1-4.5);

l) station portuaire: station côtière du service des opérations portuaires (RR1-4.18).

3.7 *Exploitation (en) simplex*

Mode d'exploitation suivant lequel la transmission est rendue possible alternativement dans les deux sens de la voie de radiocommunication, par exemple au moyen d'un système à commande manuelle (VEI 60-00-095).

Note. – Le mode d'exploitation simplex d'une voie de radiocommunication peut être réalisé avec une ou deux fréquences.

Copyright International Electrotechnical Commission
Provided by IHS under license with IEC
No reproduction or networking permitted without license from IHS Not for Resale

b) land mobile service: a mobile service between base stations and land mobile stations, or between land mobile stations (RR1-3.9);

c) maritime mobile service: a mobile service between coast stations and ship stations, or between ship stations, in which survival craft stations may also participate (RR1-3.11);

d) port operations service: a maritime mobile service in or near a port, between coast stations and ship stations, or between ship stations, in which messages are restricted to those relating to the operational handling, the movement and the safety of ships and, in emergency, to the safety of persons. Messages which are of a public correspondence nature shall be excluded (RR1-3.13).

3.6 *Station*

One or more transmitters or receivers, or a combination of transmitters and receivers, including the accessory equipment, necessary at one location for carrying on a radiocommunication service. Each station should be classified by the service in which it operates permanently or temporarily (RR1-4.1):

a) land station: a station in the mobile service not intended to be used while in motion (RR1-4.10);

b) aeronautical station: a land station in the aeronautical mobile service. In certain instances an aeronautical station may be placed on board a ship or an earth satellite (RR1-4.19);

c) aeronautical fixed station: a station in the aeronautical fixed service (RR1-4.7);

d) base station: a land station in the land mobile service carrying on a service with land mobile stations (RR1-4.11);

e) coast station: a land station in the maritime mobile service (RR1-4.13);

f) fixed base station: base station which is permanently located at a known and precisely described geographical point;

g) mobile station: a station in the mobile service intended to be used while in motion or during halts at unspecified points (RR1-4.8);

h) aircraft station: a mobile station in the aeronautical mobile service on board an aircraft or an airspace vehicle (RR1-4.21);

i) land mobile station: a mobile station in the land mobile service capable of surface movement within the geographical limits of a country or continent (RR1-4.12);

j) ship station: a mobile station in the maritime mobile service located on board a vessel, other than a survival craft, which is not permanently moored (RR1-4.15);

k) survival craft station: a mobile station in the maritime or aeronautical mobile service intended solely for survival purposes and located on any lifeboat, life-raft or other survival equipment (RR1-4.5);

l) port station: a coast station in the port operations service (RR1-4.18).

3.7 *Simplex operation*

Operating method in which transmission is made possible alternately in each direction, for example by means of manual control (IEV 60-00-095).

Note. – Simplex operation may use either one or two frequencies in radiocommunication.

Copyright International Electrotechnical Commission
Provided by IHS under license with IEC
No reproduction or networking permitted without license from IHS Not for Resale

3.8 *Exploitation (en) duplex*

Mode d'exploitation suivant lequel la transmission est possible simultanément, dans les deux sens de la voie de radiocommunication (VEI 60-00-100).

Note. – En général, le mode d'exploitation duplex d'une voie de radiocommunication nécessite l'utilisation de deux fréquences.

3.9 *Termes et définitions relatifs à la modulation*

Ces termes et définitions sont indiqués dans les normes de la présente série auxquelles ils s'appliquent.

4. Termes et définitions relatifs au matériel

4.1 *Emetteur*

Appareil utilisé dans les services mobiles, afin de convertir en des signaux radioélectriques modulés en fréquence, en phase, en amplitude ou en impulsions, des signaux à fréquence acoustique destinés à la transmission de conversations ou de données, combinés ou non avec des signaux d'appel sélectif ou avec des signaux de commande.

Note. – Pour la définition générale d'un émetteur radioélectrique, il y a lieu de se reporter au paragraphe 3.1 de la Publication 244-1 de la CEI: Méthodes de mesure applicables aux émetteurs radioélectriques, Première partie: Conditions générales de mesure, fréquence, puissance de sortie et puissance consommée.

4.2 *Récepteur*

Appareil utilisé dans les services mobiles, destiné à convertir des signaux radioélectriques modulés en fréquence, en phase, en amplitude ou en impulsions, en des signaux acoustiques ou des signaux à fréquence acoustique.

4.3 *Duplexeur*

Dispositif permettant l'utilisation d'une même antenne pour l'émission et la réception simultanées (VEI 60-30-115).

4.4 *Matériel de station (côtière), (aéronautique) de base*

Emetteur ou récepteur, ou une combinaison de ces deux appareils, utilisés dans une station de base (côtière), (aéronautique), fixe ou non.

Note. – Dans cette norme, ce type de matériel est classé dans la catégorie A.

4.5 *Matériel de station mobile*

Emetteur ou récepteur, ou une combinaison de ces deux appareils, y compris le duplexeur lorsqu'il existe, utilisés dans une station mobile.

4.6 *Matériel sur véhicule*

Matériel monté de façon permanente sur un véhicule et alimenté par la source d'énergie de ce véhicule. Dans cette définition, le mot «véhicule» désigne un moyen de transport terrestre, maritime ou aéronautique.

Note. – Dans cette norme, ce type de matériel est classé dans la catégorie A.

4.7 *Antenne*

(Ne s'applique qu'au texte anglais.)

Copyright International Electrotechnical Commission
Provided by IHS under license with IEC
No reproduction or networking permitted without license from IHS Not for Resale

3.8 *Duplex operation*

Operating method in which transmission is possible simultaneously in both directions (IEV 60-00-100).

Note. – In general, duplex operation requires two frequencies in radiocommunication.

3.9 *Terms and definitions related to modulation*

These terms and definitions are given in the relevant standards of this series.

4. Terms and definitions related to the equipment

4.1 *Transmitter*

A device used in the mobile services for converting audio-frequency signals intended for the transmission of speech or data, combined or not with selective calling signals or control signals, into required frequency, phase, amplitude or pulse-modulated radio-frequency signals.

Note. – For the general definition of a radio transmitter, reference should be made to Sub-clause 3.1 of IEC Publication 244-1: Methods of Measurement for Radio Transmitters, Part 1: General Conditions of Measurement, Frequency, Output Power and Power Consumption.

4.2 *Receiver*

A device used in the mobile services for converting frequency, phase, amplitude or pulse-modulated radio-frequency signals into required speech or audio-frequency output signals.

4.3 *Duplexer*

A device allowing the same antenna to be used for simultaneous transmission and reception (IEV 60-30-115).

4.4 *Base (coast) (aeronautical) equipment*

A transmitter or receiver, or a combination of both a transmitter and a receiver, used in a base station (coast) (aeronautical) either fixed or not.

Note. – This class of equipment is designated in this standard by Category A.

4.5 *Mobile equipment*

A transmitter or receiver, or a combination of both a transmitter and a receiver, including the duplexer, if used, in a mobile station.

4.6 *Vehicle equipment*

Equipment which is permanently mounted in a vehicle and connected to the vehicle power-supply sources. For this definition, the term "vehicle" is intended to refer to land, sea and airborne conveyances.

Note. – This class of equipment is designated in this standard by Category A.

4.7 *Antenna*

In this standard, the term "antenna" is used synonymously with "aerial" (see IEV 60-30-005).

Copyright International Electrotechnical Commission
Provided by IHS under license with IEC
No reproduction or networking permitted without license from IHS Not for Resale

4.8 *Matériel portatif*

Matériel mobile pouvant être porté à la main ou sur la personne, alimenté par sa propre source d'énergie et comportant une antenne incorporée.

Note. – Dans cette norme, ce type de matériel est classé dans la catégorie B.

4.9 *Matériel personnel*

Matériel portatif susceptible d'être porté à l'intérieur de vêtements.

Note. – Ce type de matériel est soumis à des conditions d'environnement moins sévères que les autres types de matériel portatif. Dans cette norme, il est classé dans la catégorie C.

4.10 *Matériel portatif sur véhicule*

Matériel mobile susceptible d'être raccordé aussi bien à la source d'énergie et à l'antenne du véhicule, lorsque l'appareil est monté temporairement dans un véhicule, qu'à sa propre source d'énergie intérieure et à une antenne incorporée lorsque l'appareil est porté à la main ou sur la personne.

Note. – Dans cette norme, ce type de matériel est classé dans la catégorie A/B.

5. Termes et définitions relatifs aux caractéristiques du matériel

Les termes relatifs aux caractéristiques du matériel figurent dans les articles concernant les méthodes de mesure correspondantes.

SECTION DEUX – CONDITIONS GÉNÉRALES DE MESURE

6. Dispositions générales concernant les appareils de mesure

Les appareils utilisés doivent être d'un type pour lequel il a été démontré que les résultats de mesure sont reproductibles avec une précision dépassant celle requise pour les mesures. De plus, il y a lieu de s'assurer que les caractéristiques de l'ensemble de mesure et la disposition des éléments sont telles qu'elles n'entraînent pas d'erreurs appréciables dans les résultats de mesure.

Pour les spécifications des caractéristiques de certains appareillages de mesure propres à la partie «émission» ou à la partie «réception», il y a lieu de se reporter à la publication appropriée de la présente série.

7. Conditions normales d'essai

Prendre soin d'éviter toutes les conditions qui pourraient endommager le matériel soumis par ailleurs aux conditions normales d'essai.

Sauf spécifications contraires, les mesures doivent être effectuées dans les conditions normales d'essai.

Les mesures dans les conditions normales d'essai doivent être effectuées dans les conditions de fonctionnement indiquées dans la section trois, dans les conditions normales concernant la source d'énergie indiquée dans la section quatre et dans les conditions atmosphériques normales indiquées dans la section cinq.

Copyright International Electrotechnical Commission
Provided by IHS under license with IEC
No reproduction or networking permitted without license from IHS Not for Resale

4.8 *Portable equipment*

Mobile equipment which is hand-carried or worn on the person, and which is operated from its own power supply and with a self-contained antenna.

Note. – This class of equipment is designated in this standard by Category B.

4.9 *Personal equipment*

Portable equipment which is capable of being worn within clothing.

Note. – This class of equipment is subject to less severe environmental conditions than other classifications of portable equipment. It is designated in this standard by Category C.

4.10 *Portable vehicle equipment*

Mobile equipment which is capable of being operated both from the vehicle power supply and antenna when the equipment is temporarily mounted in a vehicle, and from its own power supply and with a self-contained antenna when it is hand-carried or worn on the person.

Note. – This class of equipment is designated in this standard by Category A/B.

5. Terms and definitions related to the performance of the equipment

Terms related to the performance of the equipment are described or defined in the clauses dealing with the corresponding methods of measurement.

SECTION TWO – GENERAL CONDITIONS OF MEASUREMENT

6. General requirements concerning the measuring equipment

The measuring equipment used shall be of a type which has been demonstrated to give reproducible results with an accuracy in excess of that required for the measurement. In addition, care shall be taken to ensure that the performance of the test equipment and the disposition of the various pieces of equipment are such as not to influence the results of the measurements.

For the specification of the characteristics of certain measuring equipment for testing the transmitting and receiving part of the equipment, refer to the relevant publication of this series.

7. Standard test conditions

Care should be taken to avoid all conditions which may lead to damage to the equipment under standard test conditions.

Unless otherwise specified, the measurements shall be carried out under standard test conditions.

Measurements under standard test conditions shall be made with the operating conditions specified in Section Three, the standard conditions for primary power supply specified in Section Four and the standard atmospheric conditions specified in Section Five.

Copyright International Electrotechnical Commission
Provided by IHS under license with IEC
No reproduction or networking permitted without license from IHS
Not for Resale

SECTION TROIS – CONDITIONS DE FONCTIONNEMENT

Les conditions suivantes s'appliquent à tous les essais décrits dans cette norme.

8. Matériel principal

Le matériel doit être assemblé et tous les réglages nécessaires doivent être effectués suivant les instructions du constructeur pour le mode de fonctionnement requis. Lorsque plusieurs modes de fonctionnement sont possibles, le matériel doit être assemblé et réglé suivant les instructions appropriées. On doit effectuer une série complète de mesures pour chaque mode de fonctionnement.

9. Appareils associés

Les appareils associés au matériel, utilisés pendant les essais, doivent être ceux avec lesquels il fonctionne normalement.

Pour le matériel mobile, l'émetteur, le récepteur et l'ensemble d'alimentation normalement utilisés, doivent être montés et mis en fonctionnement dans leur(s) boîtier(s).

Pour le matériel de station terrestre, l'ensemble d'alimentation normalement utilisé et tout autre sous-ensemble pouvant avoir quelque influence sur le fonctionnement doivent être montés et mis en fonctionnement dans le ou les coffrets fournis à cet effet avec le matériel.

10. Dispositifs auxiliaires spéciaux

Dans le cas où le matériel comporte des dispositifs auxiliaires spéciaux, par exemple un dispositif de blocage automatique utilisant une oscillation codée continue, un dispositif d'appel sélectif et, en réception, un dispositif d'élimination des parasites impulsionnels, ces dispositifs spéciaux doivent être mis hors circuit. Si ce n'est pas le cas, cela doit être indiqué dans les résultats de mesure.

11. Modulation normale d'essai

Certaines mesures sont effectuées en utilisant une modulation sinusoïdale normale d'essai. La modulation d'essai particulière est indiquée dans les normes détaillées applicables de cette série.

La modulation est considérée comme sinusoïdale lorsque:

- la distorsion harmonique du signal à fréquence acoustique utilisé pour mesurer la partie «émission» est inférieure à 1%;
- dans le signal radioélectrique utilisé pour mesurer la partie «réception», la distorsion harmonique de la modulation est inférieure à 2%.

12. Conditions supplémentaires de fonctionnement

D'autres normes de cette série de publications indiquent dans chaque cas, les conditions supplémentaires de mesure pour le matériel concerné.

Copyright International Electrotechnical Commission
Provided by IHS under license with IEC
No reproduction or networking permitted without license from IHS Not for Resale

SECTION THREE – OPERATING CONDITIONS

The following conditions are applicable to all tests described in this standard.

8. Basic equipment

The equipment shall be assembled and any necessary adjustments shall be made in accordance with the manufacturer's instructions for the mode of operation required. When alternative modes are available, the equipment shall be assembled and adjusted in accordance with the relevant instructions. A complete series of measurements shall be made for each mode of operation.

9. Associated equipment

The associated equipment to be used with the equipment during tests shall be that with which it normally operates.

In mobile equipment, the receiver, transmitter and normal power-supply unit shall be included and operated in the housing(s) supplied with the equipment.

In land station equipment, the normal power-supply unit and other chassis that might affect the operation shall be included and operated in the cabinet(s) supplied with the equipment.

10. Special function sub-systems

In those cases where the equipment is provided with special function sub-systems, for example continuous tone coded muting (squelch), selective calling and, with receivers, impulsive noise blankers, the sub-system should be disabled. If not, this fact should be recorded with the results of the measurements.

11. Standard test modulation

Certain measurements are performed by using sinusoidal standard test modulation. The specific test modulation is stated in the relevant detailed standards of this series.

The modulation is considered to be sinusoidal if:

- the harmonic distortion of the audio-frequency signal used for testing the transmitter section is less than 1%;
- in the radio-frequency signal used for testing the receiver section, the harmonic distortion of the modulation is less than 2%.

12. Supplementary operating conditions

Other standards of this series of publications state supplementary conditions of measurement for the equipment to which they apply.

Copyright International Electrotechnical Commission
Provided by IHS under license with IEC
No reproduction or networking permitted without license from IHS Not for Resale

IEC 489 PT*1 83 ■ 4844891 0045459 4 ■

SECTION QUATRE – CONDITIONS NORMALES CONCERNANT LA SOURCE D'ÉNERGIE

13. Généralités

La tension normale d'essai doit être spécifiée par le constructeur, conformément aux dispositions des articles 14 à 17 ci-dessous, et doit, sauf spécifications contraires (voir aussi la note de l'article 14), se rapporter à la tension aux bornes de raccordement à la source d'énergie (voir note 1) de l'équipement en fonctionnement.

La tension d'essai doit être mesurée à l'aide d'un voltmètre ayant un indice de classe de 0,5 (voir note 2) et ne doit pas s'écarter de la valeur indiquée de plus de ±2% pendant une série de mesures faisant partie d'un même essai d'un matériel donné, sauf lorsqu'il s'agit de mesurer la durée de vie de la batterie d'un matériel portatif.

Notes 1. – Si le matériel comporte normalement un cordon ou un câble inamovible de raccordement à la source, l'extrémité libre du cordon ou du câble peut être considérée comme bornes de raccordement du matériel. En conséquence, la tension d'essai peut être mesurée à ce point.

Cette circonstance ainsi que des détails concernant le type, la section et la longueur du cordon ou du câble devront être indiqués avec les résultats de mesure.

2. – Voir la Publication 51 de la CEI: Recommandations pour les appareils de mesure électriques indicateurs à action directe et leurs accessoires.

14. Tension continue normale d'essai pour matériel alimenté par accumulateurs normalement en charge pendant le fonctionnement du matériel (catégorie A)

Pour un matériel prévu pour être alimenté par accumulateurs extérieurs et normalement en charge pendant le fonctionnement du matériel, la tension continue normale d'essai spécifiée par le constructeur est, de préférence, égale à la tension normale d'essai spécifiée dans le tableau I, multipliée par le nombre d'éléments de la batterie utilisée.

TABLEAU I

Tensions par élément (V)

Type d'accumulateur (note 1)	Tension nominale	Tension normale d'essai	Tension de fonctionnement (note 2)	
			Max.	Min.
Accumulateurs au plomb	2,0	2,20	2,6	1,8
Accumulateurs au cadmium-nickel avec soupape de sécurité	1,2	1,40	1,6	1,1
Accumulateurs au cadmium-nickel du type étanche	1,2	1,25	1,5	1,1

Notes 1. – Pour les piles au mercure, les caractéristiques sont à l'étude.

2. – Les limites de tension de fonctionnement sont indiquées pour la vérification du matériel.

3. – Les accumulateurs à bord des aéronefs peuvent avoir d'autres caractéristiques que celles indiquées au tableau I.

Copyright International Electrotechnical Commission
Provided by IHS under license with IEC
No reproduction or networking permitted without license from IHS
Not for Resale

SECTION FOUR – STANDARD CONDITIONS FOR THE PRIMARY POWER SUPPLY

13. General

The standard test voltage shall be specified by the manufacturer in accordance with the provisions of Clauses 14 to 17 below and should, unless otherwise stated (see also the note to Clause 14), refer to the voltage at the power supply input connector (see Note 1) of the equipment when the latter is in operation.

The test voltage shall be measured with the aid of a voltmeter having a class index of 0.5 (see Note 2) and should not deviate from the stated value by more than ±2% during a series of measurements carried out as part of one test on one equipment, except when the battery life in portable equipment is determined.

Notes 1. – If the equipment is normally provided with a non-detachable cord or cable, the input connector of the cord or cable may be considered to be the power input connector of the equipment. Consequently, the test voltage may be measured at this point.

This condition, together with details concerning type, cross-section and length of the cord or cable used, should be stated with the results of the measurements.

2. – See IEC Publication 51: Recommendations for Direct Acting Indicating Electrical Measuring Instruments and Their Accessories.

14. Standard d.c. test voltage for equipment supplied by accumulator batteries which are normally charged when the equipment is in operation (Category A)

For equipment intended to be supplied by accumulator batteries external to the equipment, which are normally being charged when the latter is in operation, the standard d.c. test voltage specified by the manufacturer preferably shall be equal to the standard test voltage of Table I multiplied by the number of cells in the battery to be used.

TABLE I

Voltages per cell (V)

Type of accumulator (Note 1)	Nominal voltage	Standard test voltage	Operating voltage (Note 2)	
			Max.	Min.
Lead accumulators	2.0	2.20	2.6	1.8
Nickel-cadmium accumulators with incorporated gas-vent	1.2	1.40	1.6	1.1
Nickel-cadmium accumulators of the sealed type	1.2	1.25	1.5	1.1

Notes 1. – Characteristics for mercury cells are under consideration.

2. – The maximum and minimum operating voltages are listed for the purpose of testing equipment.

3. – Accumulators for use in aircraft may have characteristics which differ from those listed in Table I.

Copyright International Electrotechnical Commission
Provided by IHS under license with IEC
No reproduction or networking permitted without license from IHS
Not for Resale

IEC 489 PT*1 83 ■ 4844891 0045461 2 ■

Si la tension normale d'essai n'est pas spécifiée, la tension normale d'essai indiquée dans le tableau I doit être considérée comme la tension normale d'essai.

Note. – Dans certains cahiers des charges, principalement ceux concernant des matériels qui consomment un courant relativement important, la tension d'essai est quelquefois spécifiée en fonction de ce courant.

Dans ce cas, le câble d'alimentation normalement fourni avec le matériel devra être inclus dans les mesures et la tension d'essai devra être mesurée à l'extrémité du câble connecté normalement à la batterie.

Les valeurs de tensions d'essai en fonction du courant sont données ci-dessous, à titre d'exemple, pour un matériel destiné à fonctionner avec un accumulateur au plomb d'une tension nominale de 6 V ou de 12 V.

Tension nominale de 6 V		Tension nominale de 12 V	
Courant débité (A)	Tension d'essai (V)	Courant débité (A)	Tension d'essai (V)
Moins de 10	6,6	Moins de 6	13,8
10 à 22	6,5	6 à 16	13,6
22 à 36	6,4	16 à 36	13,4
36 à 54	6,3	36 à 50	13,2
54 à 70	6,2	Plus de 50	13,0
Plus de 70	6,1		

15. Tension continue normale d'essai pour matériel alimenté par piles ou par accumulateurs non en charge pendant le fonctionnement du matériel (catégories B et C)

Pour un matériel à piles ou comportant un accumulateur qui, habituellement, n'est pas en charge pendant le fonctionnement du matériel, la tension normale d'essai spécifiée par le constructeur pour le jeu de batteries approprié ne doit pas dépasser la tension en fonctionnement atteinte après au moins 10% de la durée de vie utile de la batterie. Pour la méthode d'essai permettant de déterminer cette tension, voir la section neuf.

Si la tension normale d'essai n'est pas spécifiée, la tension en fonctionnement après 10% de vie utile de la batterie, mesurée suivant les dispositions de la section neuf, doit être considérée comme la tension normale d'essai.

Toutes les mesures, sauf celles faites pour déterminer la durée de vie utile de la batterie, doivent être faites à la tension normale d'essai avec une tolérance de ±2%.

Pour certaines mesures faites à la tension normale d'essai, la batterie peut être débranchée, mais non retirée, et une source extérieure d'énergie peut être branchée à la place, à l'aide de connexions blindées.

16. Tension alternative et fréquence normales pour matériel utilisant d'autres sources d'énergie

La tension alternative normale d'essai doit être égale à la tension nominale spécifiée par le constructeur.

Si le matériel comporte plusieurs prises d'entrée, on devra utiliser celle qui est prévue pour la tension nominale.

La fréquence normale d'essai doit être égale à la fréquence nominale.

Comme pour la tension d'essai, la fréquence d'essai ne doit pas varier de plus de ±2% par rapport à sa valeur nominale, pendant les mesures.

Copyright International Electrotechnical Commission
Provided by IHS under license with IEC
No reproduction or networking permitted without license from IHS Not for Resale

If the standard test voltage is not specified, the standard test voltage listed in Table I shall be considered to be the standard test voltage.

Note. – In certain equipment specifications, mainly concerning those cases where relatively large currents are drawn from the d.c. supply, the test voltage may be specified as a function of this current.

In this case, the cable normally supplied with the equipment should be included in the measurements and the test voltage should be measured at the end of the cable which is normally connected to the battery.

By way of example, test voltages for different operating currents for equipment intended for connection to lead storage batteries with a nominal voltage of 6 V or 12 V are given below.

Nominal 6 V power supply		Nominal 12 V power supply	
Operating current (A)	Test voltage (V)	Operating current (A)	Test voltage (V)
Less than 10	6.6	Less than 6	13.8
10 to 22	6.5	6 to 16	13.6
22 to 36	6.4	16 to 36	13.4
36 to 54	6.3	36 to 50	13.2
54 to 70	6.2	Greater than 50	13.0
Greater than 70	6.1		

15. Standard d.c. test voltage for equipment supplied either by primary cells or batteries, or accumulator batteries which are not charged while the equipment is in operation (Categories B and C)

For equipment supplied either from self-contained primary cells or batteries, or from self-contained accumulator batteries not normally being charged while the equipment is in operation, the standard test voltage specified by the manufacturer for each applicable battery complement shall not exceed the on-load voltage measured after at least 10% of useful battery life has been completed. For the method to determine this voltage, see Section Nine.

If the standard test voltage is not specified, the on-load voltage after 10% of useful battery life has been completed, measured according to Section Nine, shall be considered to be the standard test voltage.

All measurements, except that for determining the useful battery life, shall be performed at standard test voltage with a permissible deviation of ±2%.

For measurements of certain characteristics performed at standard test voltage, the batteries may be disconnected, but not removed, and an external source may be connected through screened leads.

16. Standard a.c. voltage and frequency for equipment using other power supplies

The standard a.c. test voltage shall be equal to the nominal voltage specified by the manufacturer.

If the equipment is provided with different input taps, the one designated "nominal" should be used.

The standard test frequency shall be equal to the nominal frequency.

During the measurements, the test frequency, like the test voltage, shall not deviate from its nominal value by more than ±2%.

Copyright International Electrotechnical Commission
Provided by IHS under license with IEC
No reproduction or networking permitted without license from IHS
Not for Resale

17. **Tension continue normale d'essai pour matériel portatif sur véhicule (catégorie A/B)**

Le cahier des charges pour matériel portatif sur véhicule doit comporter une indication concernant la tension d'essai à utiliser soit suivant les dispositions de l'article 14 ou de l'article 15, soit suivant les dispositions de ces deux articles.

En l'absence d'une telle indication, la plus faible valeur des deux tensions mentionnées ci-dessus doit être utilisée.

SECTION CINQ – CONDITIONS ATMOSPHÉRIQUES NORMALES

18. **Généralités**

Les mesures, dans des conditions atmosphériques normales, doivent être effectuées dans les conditions indiquées dans l'article 19 ci-dessous. Au besoin, les résultats des mesures peuvent être corrigés par le calcul pour être ramenés à la température de référence normale de 20 °C et à la pression atmosphérique de référence normale de $1{,}013 \times 10^5$ Pa (1013 mbar), comme exposé dans l'article 20. Si cette correction n'est pas possible, les mesures sont effectuées dans une des conditions normales d'arbitrage spécifiées dans l'article 21 et, de préférence, dans celle correspondant à une température ambiante de 20 ± 1 °C.

Note. – Les conditions atmosphériques normales indiquées aux articles 19, 20 et 21 sont conformes à celles qui figurent dans la Publication 68-1 de la CEI: Essais fondamentaux climatiques et de robustesse mécanique, Première partie: Généralités et guide.

19. **Conditions atmosphériques normales d'essai**

Les mesures et les essais mécaniques, dont les résultats sont soit indépendants de la température et de la pression atmosphérique ou peuvent être corrigés par le calcul pour être ramenés à la température normale de référence et à la pression atmosphérique normale de référence figurant dans l'article 20, peuvent être effectués à n'importe quelle combinaison de température, humidité et pression atmosphérique réalisée au moment de l'essai à condition de rester dans les limites suivantes:

Température:	+15 °C à +35 °C.
Humidité relative:	45% à 75%.
Pression atmosphérique:	$0{,}86 \times 10^5$ Pa à $1{,}06 \times 10^5$ Pa (860 mbar à 1060 mbar).

La température et l'humidité relative doivent être sensiblement constantes pendant une série de mesures faites en tant que partie d'un essai donné sur un matériel donné.

Note. – Lorsqu'il est impossible d'effectuer les mesures dans les conditions atmosphériques normales d'essai, les conditions effectives devront être mentionnées dans une note ajoutée au rapport d'essai.

Si les grandeurs à mesurer dépendent de la température, de l'humidité et de la pression atmosphérique et que la loi de relation soit inconnue, l'article 21 est applicable.

Copyright International Electrotechnical Commission
Provided by IHS under license with IEC
No reproduction or networking permitted without license from IHS
Not for Resale

17. **Standard d.c. test voltage for portable vehicle equipment (Category A/B)**

The equipment specification for portable vehicle equipment shall contain a statement concerning the test voltage to be used, either according to one of the Clauses 14 and 15, or according to both these clauses.

In the absence of any statement to the contrary, the lower of the two voltages mentioned above shall be used.

SECTION FIVE – STANDARD ATMOSPHERIC CONDITIONS

18. **General**

Measurements under standard atmospheric conditions shall be carried out under the conditions stated in Clause 19 below. If necessary, the results of the measurements can be corrected by calculation to the standard reference temperature of 20 °C and the standard reference air pressure of 1.013×10^5 Pa (1013 mbar), as explained in Clause 20. If this correction is not possible, the measurements shall be performed at one of the standard referee conditions specified in Clause 21, preferably at the condition corresponding to an ambient temperature of 20 ± 1 °C.

Note. – The standard atmospheric conditions stated in Clauses 19, 20 and 21 are in conformity with those given in IEC Publication 68-1: Basic Environmental Testing Procedures, Part 1: General and Guidance.

19. **Standard atmospheric testing conditions**

Measurements and mechanical tests, the results of which are either independent of temperature and air pressure, or can be corrected by calculation to the standard reference temperature and air pressure stated in Clause 20, may be carried out at any existing combination of temperature, humidity and air pressure, provided they are within the following limits:

Temperature:	+15 °C to +35 °C.
Relative humidity:	45% to 75%.
Air pressure:	0.86×10^5 Pa to 1.06×10^5 Pa (860 mbar to 1060 mbar).

The temperature and relative humidity shall be substantially constant during a series of measurements carried out as a part of one test on one given equipment.

Note. – Where it is impracticable to carry out measurements under standard atmospheric conditions for testing, a note to this effect stating the actual conditions should be added to the test report.

If the quantities to be measured depend on temperature, humidity and air pressure and the law of dependence is unknown, Clause 21 applies.

Copyright International Electrotechnical Commission
Provided by IHS under license with IEC
No reproduction or networking permitted without license from IHS
Not for Resale

IEC 489 PT*1 83 ■ 4844891 0045465 T ■

20. **Conditions atmosphériques normales de référence**

Si les grandeurs à mesurer dépendent de la température et de la pression atmosphérique ou de l'une de ces grandeurs, et que la loi de relation en soit connue, les grandeurs sont mesurées dans les conditions indiquées dans l'article 19 et, le cas échéant, les valeurs obtenues sont corrigées par le calcul pour être ramenées aux valeurs normales de référence suivantes:

Température: +20 °C.
Pression atmosphérique: $1{,}013 \times 10^5$ Pa (1013 mbar).

Note. – Aucune indication n'est donnée pour l'humidité relative, étant donné qu'une correction par le calcul n'est généralement pas possible.

21. **Conditions atmosphériques normales d'arbitrage**

Si les grandeurs à mesurer dépendent de la température, de l'humidité et de la pression atmosphérique et que la loi de relation soit inconnue, les mesures peuvent être faites, après entente, dans un des ensembles de conditions suivantes:

Ensemble	Température (°C)	Humidité relative (%)	Pression atmosphérique
a	+20±1	63 à 67	$0{,}86 \times 10^5$ Pa à $1{,}06 \times 10^5$ Pa
b	+23±1	48 à 52	$0{,}86 \times 10^5$ Pa à $1{,}06 \times 10^5$ Pa
c	+25±1	48 à 52	$0{,}86 \times 10^5$ Pa à $1{,}06 \times 10^5$ Pa
d	+27±1	63 à 67	$0{,}86 \times 10^5$ Pa à $1{,}06 \times 10^5$ Pa (860 mbar à 1060 mbar)

Les mesures doivent être effectuées de préférence à une température de 20 °C.

Des mesures à une température différente de 20 °C sont faites après entente entre le constructeur et l'utilisateur qui devront aussi s'entendre sur les limites des valeurs caractéristiques.

Le rapport d'essai doit indiquer la température, l'humidité relative et la pression atmosphérique pendant les mesures.

SECTION SIX – FACTEUR D'UTILISATION NORMAL SUR UN JOUR

Le matériel peut être prévu pour un fonctionnement permanent ou pour un fonctionnement intermittent correspondant aux conditions d'essai suivantes:

22. **Fonctionnement permanent des matériels de station de base ou sur véhicule (catégorie A)**

Le fonctionnement permanent correspond au fonctionnement de l'émetteur à la puissance radioélectrique de sortie nominale et du récepteur à la puissance à fréquence acoustique de sortie nominale dans les conditions normales de charge recommandées par le constructeur pendant 24 h.

Copyright International Electrotechnical Commission
Provided by IHS under license with IEC
No reproduction or networking permitted without license from IHS Not for Resale

20. **Standard atmospheric reference conditions**

If the quantities to be measured depend on temperature and/or air pressure and the law of dependence is known, the quantities are measured under the conditions given in Clause 19 and, if necessary, the values obtained are corrected by calculation to the following standard reference values:

Temperature: +20°C.
Air pressure: 1.013×10^5 Pa (1013 mbar).

Note. – No requirements for relative humidity are given because a correction by calculation is generally not possible.

21. **Standard atmospheric referee conditions**

If the quantities to be measured depend on temperature, humidity and air pressure and the law of dependence is unknown, the measurements may be made, by mutual agreement, under one of the following sets of conditions.

Set	Temperature (°C)	Relative humidity (%)	Air pressure
a	+20±1	63 to 67	0.86×10^5 Pa to 1.06×10^5 Pa
b	+23±1	48 to 52	0.86×10^5 Pa to 1.06×10^5 Pa
c	+25±1	48 to 52	0.86×10^5 Pa to 1.06×10^5 Pa
d	+27±1	63 to 67	0.86×10^5 Pa to 1.06×10^5 Pa (860 mbar à 1060 mbar)

The measurements shall preferably be carried out at a temperature of 20°C.

Measurements at a temperature differing from 20°C shall be made by agreement between manufacturer and user who should also agree on suitable limits of characteristic values.

The test report shall give the actual values of temperature, relative humidity and air pressure during the measurements.

SECTION SIX – STANDARD DAILY DUTY-CYCLE CONDITIONS

The equipment may be rated as either continuous or intermittent according to the following conditions:

22. **Continuous operation of base equipment or vehicle equipment (Category A)**

Continuous operation denotes operation of the transmitter at rated radio-frequency output power and of the receiver at rated audio-frequency output power under the manufacturer's normal recommended loading conditions for 24 h.

Copyright International Electrotechnical Commission
Provided by IHS under license with IEC
No reproduction or networking permitted without license from IHS Not for Resale

23. **Fonctionnement intermittent des matériels sur véhicule (catégorie A)**

Le facteur d'utilisation normal correspond à un fonctionnement intermittent se composant de cycles de 1 min de fonctionnement en émission à la puissance radioélectrique de sortie nominale, suivi de 4 min de fonctionnement en réception à la puissance à fréquence acoustique de sortie nominale, dans les conditions normales de charge recommandées par le constructeur, pendant 8 h, suivi immédiatement de trois cycles comprenant 5 min d'émission et 15 min de réception dans les conditions précédentes.

En conséquence, le facteur d'utilisation normal sur un jour correspond à une période de fonctionnement de 9 h, suivie d'une période de repos de 15 h.

Note. – Si un facteur d'utilisation différent pour fonctionnement intermittent est requis pour une application spéciale, il convient que la procédure soit définie après entente entre les parties intéressées.

24. **Fonctionnement intermittent des matériels portatifs et des matériels personnels (catégories A/B, B et C)**

Le facteur d'utilisation normal correspond à un fonctionnement intermittent des matériels portatifs et des matériels personnels selon l'une des séquences suivantes:

a) pour les matériels se composant d'un émetteur et d'un récepteur et ayant une consommation inférieure ou égale à 60 W, cycles de 6 s de réception à la puissance à fréquence acoustique de sortie nominale, suivis de 6 s d'émission à la puissance radioélectrique de sortie nominale, suivis d'une attente de 48 s; ces cycles sont répétés pendant 8 h;

b) pour les matériels se composant d'un émetteur et d'un récepteur et ayant une consommation inférieure à 1,0 W, cycles de 3 s de réception à la puissance à fréquence acoustique de sortie nominale, suivis de 3 s d'émission à la puissance radioélectrique de sortie nominale, suivis d'une attente de 54 s; ces cycles sont répétés pendant 8 h;

c) pour les matériels ne comportant qu'un émetteur (ou récepteur), cycles de 6 s de fonctionnement à la puissance nominale de sortie, suivis d'une attente de 54 s; ces cycles sont répétés pendant 8 h.

En conséquence, le facteur d'utilisation normal correspond à un fonctionnement de 8 h par jour, suivi d'une période de repos de 16 h; on peut cependant spécifier un facteur d'utilisation différent.

SECTION SEPT – ESTIMATION DES POSSIBILITÉS DU MATÉRIEL DANS DES CONDITIONS DIFFÉRENTES DES CONDITIONS NORMALES D'ESSAI

25. **Généralités**

Le cas échéant, les caractéristiques fonctionnelles du matériel doivent être déterminées au cours ou à l'issue d'une période pendant laquelle le matériel est soumis à des conditions d'essai différentes des conditions normales d'essai indiquées dans l'article 7.

Des détails concernant les caractéristiques fonctionnelles à mesurer dans des conditions autres que les conditions normales d'essai sont donnés dans les articles des sections des publications de cette série qui concernent les matériels en essai.

Le degré de dégradation des caractéristiques fonctionnelles qui peut être considéré comme acceptable, ainsi que les conditions d'environnement dans lesquelles les essais doivent être effectués (de préférence en accord avec celles qui sont spécifiées dans la section huit ci-dessous), doit être spécifié dans le cahier des charges du matériel.

Copyright International Electrotechnical Commission
Provided by IHS under license with IEC
No reproduction or networking permitted without license from IHS
Not for Resale

23. **Intermittent operation of vehicle equipment (Category A)**

The standard duty-cycle for intermittent operation is 1 min transmit at rated radio-frequency output power and 4 min receive at the rated audio-frequency output power under the manufacturer's normal recommended loading conditions for a period of 8 h, followed immediately by three cycles of 5 min transmit and 15 min receive at rated output power.

Consequently, the standard duty-cycle should be performed 9 h each day followed by 15 h rest.

Note. – If a different cycle of intermittent operation is required for a special application, the procedure should be defined by agreement between the parties concerned.

24. **Intermittent operation of portable and personal equipment (Categories A/B, B and C)**

The standard duty-cycle for intermittent operation of portable and personal equipment shall be one of the following:

a) for equipment containing a transmitter and a receiver and having a power input less than or equal to 60 W, the duty-cycle should be 6 s receive at rated audio-frequency output power, 6 s transmit at rated radio-frequency output power, followed by 48 s stand-by; this cycle being repeated for a period of 8 h;

b) for equipment containing a transmitter and a receiver and having a power input less than 1.0 W, the duty cycle should be 3 s receive at rated audio-frequency output power, 3 s transmit at rated radio-frequency output power, followed by 54 s stand-by; this cycle being repeated for a period of 8 h;

c) for equipment containing only a transmitter (or a receiver), the duty-cycle shall be 6 s transmit (or receive) at rated output power, followed by 54 s stand-by; this cycle being repeated for a period of 8 h.

Consequently, the standard duty-cycle should be performed 8 h each day followed by 16 h rest, unless a different duty-cycle is specified.

SECTION SEVEN – EVALUATION OF THE PERFORMANCE OF THE EQUIPMENT UNDER CONDITIONS DEVIATING FROM STANDARD TEST CONDITIONS

25. **General**

If required, the performance characteristics of the equipment should be determined during or after a period within which the equipment is subjected to test conditions which are different from the standard test conditions specified in Clause 7.

Particulars regarding the performance characteristics to be measured under conditions deviating from standard test conditions are stated in clauses found in the sections of the publications of this series that pertain to the equipment under test.

The amount of degradation of the performance characteristics that may be regarded as acceptable, as well as the environmental conditions at which the tests should be made (preferably in accordance with those specified in Section Eight below), shall be specified in the equipment specification.

Copyright International Electrotechnical Commission
Provided by IHS under license with IEC
No reproduction or networking permitted without license from IHS Not for Resale

Aux limites extrêmes des conditions d'environnement, il n'est pas nécessaire que le matériel satisfasse à toutes les caractéristiques fonctionnelles requises. Toutefois, il doit, dans tous les cas, satisfaire à toutes les règles de sécurité données dans la Publication 215 de la CEI: Règles de sécurité applicables aux matériels d'émission radioélectrique*. Il doit aussi ne pas cesser de satisfaire aux conditions du Règlement des radiocommunications de l'UIT, en ce qui concerne, par exemple, les rayonnements parasites et les tolérances de fréquence, même pendant les périodes de chauffage ou d'attente.

SECTION HUIT – MESURES INITIALES DANS LES CONDITIONS NORMALES D'ESSAI

26. Généralités

Avant de commencer les essais décrits dans les articles 27 à 30 ci-dessous, il y a lieu de relever les caractéristiques fonctionnelles dans les conditions normales d'essai (voir article 7).

Comme ces caractéristiques peuvent dépendre de la température et du taux d'humidité et que la loi de dépendance est généralement inconnue, les mesures doivent s'effectuer dans l'une des conditions atmosphériques normales d'arbitage indiquées dans l'article 21 et, de préférence, dans celle correspondant à une température ambiante de +20±1°C.

27. Variations de tension de la source d'énergie entre les limites de la plage spécifiée

27.1 *Définition*

La plage spécifiée de variations de tension est la plage de tensions à l'intérieur de laquelle le fonctionnement du matériel correspond à des spécifications techniques déterminées.

27.2 *Conditions de mesure*

Le matériel doit être mis en fonctionnement dans les conditions atmosphériques indiquées dans l'article 26, et la tension de la source d'énergie doit varier suivant les paragraphes 27.2.1, 27.2.2 ou 27.2.3 ci-dessous.

27.2.1 *Matériel alimenté par accumulateurs normalement en charge pendant le fonctionnement du matériel*

Sauf spécifications contraires, la valeur maximale et la valeur minimale de la tension d'essai doivent être conformes à celles résultant des valeurs données par élément dans le tableau I, multipliées par le nombre d'éléments de la batterie utilisée (voir article 14).

27.2.2 *Matériel alimenté par piles ou par accumulateurs non en charge pendant le fonctionnement du matériel*

La valeur maximale et la valeur minimale de la tension d'essai doivent être conformes à celles qui sont indiquées dans le cahier des charges (voir aussi article 15).

Sauf spécifications contraires, l'essai doit comporter une mesure faite à la tension de batterie correspondant à la «fin de vie» (voir la section neuf).

Les mesures effectuées à la valeur maximale et à la valeur minimale de tension de la source d'énergie peuvent être combinées avec (ou remplacées par) les mesures faites pour déterminer la durée de vie utile de la batterie, décrites dans la section neuf.

*En attendant la parution de la Publication 489-8 de la CEI de cette série.

Copyright International Electrotechnical Commission
Provided by IHS under license with IEC
No reproduction or networking permitted without license from IHS Not for Resale

At the extreme limits of the environmental conditions, the equipment need not satisfy all performance requirements. However, in any event it should satisfy the safety requirements laid down in IEC Publication 215: Safety Requirements for Radio Transmitting Equipment.* It should also comply with the requirements given in the ITU Radio Regulations in regard to, for example, spurious radiation and frequency tolerance, also during warm-up and stand-by periods.

SECTION EIGHT – INITIAL MEASUREMENTS UNDER STANDARD TEST CONDITIONS

26. General

Before starting the tests described in Clauses 27 to 30 below, the performance characteristics shall be evaluated under the standard test conditions (see Clause 7).

As these characteristics may depend on temperature and humidity and the law of dependence is generally unknown, the measurements shall be made at one of the standard referee conditions specified in Clause 21, preferably at one corresponding to an ambient temperature of $+20 \pm 1$°C.

27. Variation of primary power supply voltage range within the specified range

27.1 *Definition*

The power supply voltage range is the range of primary supply voltages over which the equipment should operate with a specified performance.

27.2 *Conditions of measurement*

The equipment shall be operated under the atmospheric conditions mentioned in Clause 26, and the power supply voltage shall be varied in accordance with Sub-clauses 27.2.1, 27.2.2 or 27.2.3 below.

27.2.1 *Equipment supplied by accumulator batteries which are normally charged when the equipment is in operation*

Unless otherwise specified, the maximum value and minimum value of the test voltage shall be equal to the maximum voltage and minimum voltage per cell of Table I, multiplied by the number of cells of the battery (see Clause 14).

27.2.2 *Equipment supplied either by primary cells or batteries or accumulator batteries which are not charged while the equipment is in operation*

The maximum value and minimum value of the test voltage shall be equal to those specified in the equipment specification (see also Clause 15).

Unless otherwise specified, the test shall include a measurement at the battery end-point voltage (see Section Nine).

The measurements at the maximum value and minimum value of the power supply voltage may be combined with (or replaced by) the measurements for determining the useful battery life described in Section Nine.

---

*Until IEC Publication 489-8 in this series is published.

Copyright International Electrotechnical Commission
Provided by IHS under license with IEC
No reproduction or networking permitted without license from IHS Not for Resale

IEC 489 PT*1 83 ■ 4844891 0045471 5 ■

27.2.3 *Tension et fréquence pour d'autres sources d'énergie*

La valeur maximale et la valeur minimale de la tension et de la fréquence d'essai doivent être égales à celles qui sont spécifiées dans le cahier des charges (voir aussi article 16).

Note. – Les matériels navals ou aéroportés peuvent être soumis à l'essai à la tension nominale ±10%, mais un essai à tension forte (par exemple +25% pendant une période spécifiée) et un essai à tension faible (−20%) sont habituellement requis.

27.2.4 *Tension pour les matériels portatifs et personnels*

Procéder aux mesures conformément aux paragraphes 27.2.1 et/ou 27.2.2; voir aussi article 15.

28. Plage de températures

28.1 *Définition*

Le terme *plage de températures* se rapporte à la plage de températures ambiantes dans laquelle le matériel peut fonctionner avec des caractéristiques fonctionnelles spécifiées.

28.2 *Conditions de mesure*

Le matériel doit être essayé à la valeur la plus basse et à la valeur la plus élevée de la plage de températures spécifiée dans le cahier des charges (voir note) en utilisant, sauf spécifications contraires, les méthodes décrites dans les Publications 68 de la CEI: Essais fondamentaux climatiques et de robustesse mécanique; 68-2-1: Deuxième partie: Essais – Essais A: Froid, et 68-2-2: Essais B: Chaleur sèche.

Ces essais doivent s'effectuer à la tension normale d'essai (voir la section quatre). Si le cahier des charges le requiert, les mesures doivent être reprises aux valeurs limites de la plage de tensions spécifiée pour la source d'énergie, suivant les dispositions de l'article 27.

Note. – Les Publications 68-2-1 et 68-2-2 de la CEI spécifient plusieurs valeurs préférentielles de températures auxquelles doivent s'effectuer les essais de froid et de chaleur sèche. Pour les diverses catégories de matériel considérées dans la présente norme, les valeurs préférentielles applicables sont:

- pour l'essai de froid: +5°C, −10°C, −25°C, −30°C et, pour certaines classifications de matériel, −40°C;
- pour l'essai de chaleur sèche: +40°C, +55°C, +60°C et, pour certaines classifications, +70°C.

En conséquence, la valeur la plus basse de la plage de températures spécifiée dans le cahier des charges devrait être, de préférence, une de celles qui sont indiquées ci-dessus pour l'essai de froid et la valeur la plus élevée devrait être une de celles qui sont indiquées ci-dessus pour l'essai de chaleur sèche.

28.3 *Méthode de mesure*

La méthode de mesure suivante est un résumé des méthodes d'essai décrites dans les Publications 68-2-1 et 68-2-2 de la CEI. Lors des mesures, ces publications devront cependant être consultées.

28.3.1 *Procédure initiale pour l'essai de froid et l'essai de chaleur sèche*

Le matériel en essai et les appareils associés, montés dans leurs boîtiers, doivent être à la température du lieu d'essai. Le matériel, après avoir été mis dans les conditions «prêt à fonctionner», est alors placé dans une enceinte ou une chambre d'essai dont la température peut être mesurée et réglée avec précision.

La chambre doit être initialement à la température ambiante du lieu d'essai; sa température est ensuite réglée à la valeur spécifiée. La variation de température ne doit pas être supérieure à 1°C/min, cette variation étant comptée en moyenne pour des périodes ne dépassant pas 5 min.

Le matériel doit rester soumis aux conditions de température spécifiées jusqu'à ce que l'équilibre thermique soit atteint. Le matériel doit alors être mis en fonctionnement à la tension normale d'essai, et

Copyright International Electrotechnical Commission
Provided by IHS under license with IEC
No reproduction or networking permitted without license from IHS Not for Resale

IEC 489 PT*1 83 ■ 4844891 0045472 7 ■

27.2.3 *Voltage and frequency for other power supplies*

The maximum value and minimum value of both the test voltage and frequency shall be equal to those specified in the equipment specification (see also Clause 16).

Note. – Ship and airbone equipment may be tested at nominal voltage ±10%, but a high-voltage test (e.g. +25% during a specified period) and a low voltage test (−20%) are usually required.

27.2.4 *Voltage for portable and personal equipment*

The measurements shall be made in accordance with Sub-clauses 27.2.1 and/or 27.2.2; see also Clause 15.

28. Temperature range

28.1 *Definition*

The term *temperature range* refers to the range of ambient temperature over which the equipment should operate with a specified performance.

28.2 *Conditions of measurement*

The equipment shall be tested at the lower limit and at the higher limit of the temperature range specified in the equipment specification (see note) using, unless otherwise specified, the procedures described in IEC Publications 68: Basic Environmental Testing Procedures; 68-2-1, Part 2: Tests – Tests A: Cold, and 68-2-2, Tests B: Dry Heat.

The tests shall be made at standard test voltage (see Section Four). If required by the equipment specification, the measurements shall be repeated at the extreme limits of the power supply voltage range, in accordance with Clause 27.

Note. – IEC Publications 68-2-1 and 68-2-2 give a number of preferred values for the temperature at which the cold and dry-heat tests are to be made. The preferred values applicable to the various categories of equipment considered in this standard are:

- for the cold test: +5°C, −10°C, −25°C, −30°C and, for certain classifications of equipment, −40°C;
- for the dry-heat test: +40°C, +55°C, +60°C and, for certain classifications of equipment, +70°C.

The lower limit of the temperature range specified in the equipment specification should therefore preferably be one of the temperatures mentioned for the cold test and the higher limit should preferably be one of the temperatures mentioned for the dry-heat test.

28.3 *Method of measurement*

The following method of measurement is a summary of the test procedures described in IEC Publications 68-2-1 and 68-2-2. However, these publications should be consulted when carrying out the measurements.

28.3.1 *Initial procedure during the cold and dry-heat tests*

The equipment and associated equipment in its normal enclosure, while being at the ambient temperature of the working space, shall be placed, in the switched-off "ready for use" condition, in a box or chamber the temperature of which can be accurately measured and controlled.

The temperature of the chamber, while initially being at the ambient temperature of the working space, shall be adjusted to the specified value. The rate of change of temperature shall not exceed 1°C/min, averaged over a period of not more than 5 min.

The equipment shall be exposed to the specified temperature conditions until its temperature reaches equilibrium. The equipment shall then be switched on and operated at standard test voltage to

Copyright International Electrotechnical Commission
Provided by IHS under license with IEC
No reproduction or networking permitted without license from IHS Not for Resale

la possibilité de fonctionnement vérifiée. La procédure est alors poursuivie selon les paragraphes suivants.

28.3.2 *Essai de froid*

Le matériel est mis en position «arrêt» et reste soumis aux conditions de température basse pendant 2 h, sans circulation d'air forcée directement dirigée sur le matériel.

A la fin de cette période, le matériel est mis en fonctionnement et fait l'objet de mesures à basse température.

28.3.3 *Essai de chaleur sèche*

Le matériel doit rester en fonctionnement dans les conditions d'essai correspondant au facteur d'utilisation normal approprié, spécifiées à la section six. La température doit être maintenue à la valeur spécifiée sans circulation d'air forcée directement dirigée sur le matériel.

Le matériel fait l'objet de mesures à cette température.

Quelle que soit la température spécifiée, le taux d'humidité de l'air, en valeur absolue pendant l'essai complet, ne devra pas dépasser 20 g d'eau par m^3 d'air. Cela correspond approximativement à une humidité relative de 50% à 35°C.

Note. – Pour certaines classifications de matériels navals ou aéroportés, les essais donnés ci-dessus peuvent ne pas suffire. Par exemple, pendant l'essai de froid (de chaleur sèche), il peut être nécessaire de stabiliser le matériel à une certaine «température en non-fonctionnement basse (élevée)» avant d'effectuer les mesures à la «température en fonctionnement basse (élevée)».

29. **Humidité**

29.1 *Conditions de mesure*

Lorsqu'il y a lieu d'effectuer des essais en présence d'humidité, ces essais doivent être faits dans les conditions spécifiées dans la Publication 68-2-3 de la CEI: Essai Ca: Essai continu de chaleur humide.

Les essais doivent s'effectuer à la tension normale d'essai (voir section quatre). Si cela est requis par le cahier des charges, les mesures sont répétées aux valeurs limites de la plage de variations de tension spécifiée pour la source d'énergie suivant les dispositions de l'article 27.

29.2 *Méthode de mesure*

La méthode de mesure suivante est un résumé des méthodes d'essai décrites dans la Publication 68-2-3 de la CEI. Lors des mesures, cette publication devra cependant être consultée.

Le matériel en essai et les appareils associés, montés dans leur boîtier, doivent être à la température du lieu d'essai. Le matériel, après avoir été mis dans les conditions «prêt à fonctionner», est alors placé dans une chambre humide capable, sauf spécifications contraires, de maintenir une température de 50±2°C (bien que la Publication 68-2-3 de la CEI fasse mention de 40±2°C) avec une humidité relative comprise entre 90% et 95%.

L'air de la chambre doit être brassé et la construction de cette chambre doit empêcher le brouillard ou l'eau de condensation d'atteindre le matériel.

Le matériel doit rester soumis aux conditions spécifiées de chaleur humide pendant une durée qui dépend du degré de sévérité prévu dans le cahier des charges.

A la fin de cette période, le matériel est mis en fonctionnement et fait l'objet de mesures en maintenant les conditions spécifiées d'humidité.

Copyright International Electrotechnical Commission
Provided by IHS under license with IEC
No reproduction or networking permitted without license from IHS Not for Resale

check whether it is capable of functioning. Continue the procedure as described in the following paragraphs.

28.3.2 *Cold test*

Switch the equipment off and expose it to the low temperature condition for a further period of 2 h without forced circulation of air directly on the equipment.

At the end of this period, switch the equipment on and evaluate it at the low temperature.

28.3.3 *Dry-heat test*

The equipment shall remain in operation under the appropriate standard duty-cycle test conditions specified in Section Six, the temperature being maintained at the specified temperature without forced circulation of air directly on the equipment.

The equipment shall be evaluated at that temperature.

Irrespective of the specified temperature, the absolute humidity during the complete test should not exceed 20 g of water per m^3 of air. This corresponds approximately to 50% of relative humidity at 35°C.

Note. – For certain classifications of ship and airborne equipment, the tests given above may not suffice. For example, during the cold (dry-heat) test the equipment may have to be stabilized first at a certain "low (high) non-operating temperature" before the measurements are made at the "low (high) operating temperature".

29. **Humidity**

29.1 *Conditions of measurement*

When tests under specified conditions of humidity are required, such tests shall be carried out under the conditions specified in IEC Publication 68-2-3: Test Ca: Damp Heat, Steady State.

The tests shall be made at the standard test voltage (see Section Four). If required by the equipment specification, the measurements should be repeated at the extreme limits of the power supply voltage range in accordance with Clause 27.

29.2 *Method of measurement*

The following method of measurement is a summary of the test procedure described in IEC Publication 68-2-3. This publication should however be consulted when carrying out the measurements.

The equipment and associated equipment in its normal enclosure, while being at the ambient temperature of the working space, shall be placed in the switched-off "ready for use" condition, in a humidity chamber, unless otherwise specified, capable of maintaining the temperature at 50±2°C (although 40±2°C is mentioned in IEC Publication 68-2-3) and a relative humidity between 90% and 95%.

The air in the chamber shall be stirred and the chamber shall be so designed that neither mist nor condensed water can reach the equipment.

The equipment shall be exposed to the specified humidity conditions for a period which depends upon the required class of severity mentioned in the equipment specification.

At the end of this period, switch the equipment on and evaluate it while maintaining the specified humidity conditions.

Copyright International Electrotechnical Commission
Provided by IHS under license with IEC
No reproduction or networking permitted without license from IHS
Not for Resale

IEC 489 PT*1 83 ■ 4844891 0045475 2 ■

S'il est prescrit de vérifier la capacité du matériel à supporter un essai cyclique de variation d'humidité et de température, on doit consulter la Publication 68-2-4 de la CEI: Essai D: Essai accéléré de chaleur humide.

De plus, un essai de variation de température et un essai dans des conditions de 100% d'humidité peuvent être requis.

Note. – Pour certaines classifications de matériels navals ou aéroportés, les combinaisons de température et d'humidité énumérées ci-dessus peuvent ne pas suffire. Des plages supplémentaires sont à l'étude.

30. **Autres conditions d'environnement**

Cet article ne concerne pas les matériels utilisés dans les stations terrestres.

30.1 *Vibrations*

30.1.1 *Définition*

La résistance aux vibrations est l'aptitude du matériel à maintenir certaines caractéristiques mécaniques et électriques spécifiées pendant et après un essai de vibration.

30.1.2 *Conditions de mesure*

Les conditions de mesure ci-après sont en accord avec la Publication 68-2-6 de la CEI: Essai Fc et guide: Vibrations (sinusoïdales).

30.1.2.1 *Montage du matériel*

a) Le matériel, avec ou sans amortisseurs à vibration, doit être assujetti au plateau de la machine vibrante par ses dispositifs normaux de fixation ou comme prescrit par la spécification particulière. Tout support ou système de bridage supplémentaire est à éviter. Tout organe de liaison avec le matériel (tel que câble, tuyau, etc.) devra être disposé de telle sorte qu'il n'impose pas plus de contrainte ou de masse qu'il ne le fait lorsque le matériel est en service.

b) Le matériel destiné à être utilisé avec des amortisseurs de vibrations doit être normalement essayé avec ses amortisseurs.
S'il n'est pas possible de faire un essai de vibration avec les amortisseurs appropriés, par exemple si le matériel est monté avec d'autres matériels dans un dispositif commun de montage ou si les caractéristiques dynamiques des amortisseurs sont très variables (par exemple dépendantes de la température), le matériel peut alors être essayé sans ses amortisseurs avec une amplitude de vibration différente, comme prescrit dans la spécification particulière. Cette amplitude sera déterminée en tenant compte de la transmissibilité du dispositif amortisseur suivant chacun des axes produisant les conditions de vibration les plus sévères.

Note. – La spécification particulière peut prescrire un essai supplémentaire sur un matériel démuni de ses amortisseurs de façon à s'assurer qu'un minimum acceptable de résistance de la structure aux vibrations a été atteint.

c) La spécification particulière doit indiquer si l'effet de pesanteur est important. Dans ce cas, le matériel doit être monté de telle façon que cette force agisse dans le même sens qu'en utilisation normale. Quand l'effet de pesanteur est sans importance, le matériel peut être monté dans n'importe quelle position.

30.1.2.2 *Machine vibrante*

a) Caractéristiques requises

Lorsque la machine vibrante est chargée en vue de procéder à une épreuve, les caractéristiques requises pour la machine et les supports de fixation doivent être celles qui sont données ci-après.

Copyright International Electrotechnical Commission
Provided by IHS under license with IEC
No reproduction or networking permitted without license from IHS Not for Resale

If it is required to test the ability of the equipment to withstand cyclic variations of humidity and temperature, IEC Publication 68-2-4: Test D: Accelerated Damp Heat, should be consulted.

In addition, a temperature variation test and a test under conditions of 100% humidity may be required.

Note. – For certain classifications of ship and airborne equipment, the combinations of temperature and humidity listed above may not suffice. Additional ranges are under consideration.

30. **Other environmental conditions**

This clause is not applicable to equipment used in land stations.

30.1 *Vibration*

30.1.1 *Definition*

Vibration stability is the ability of the equipment to maintain specified mechanical and electrical performance during and after being vibrated.

30.1.2 *Conditions of measurement*

The following test conditions are in accordance with IEC Publication 68-2-6: Test Fc and Guidance: Vibration (sinusoidal).

30.1.2.1 *Mounting of equipment*

a) Equipment, with or without vibration isolators, shall be fastened to the vibration generator table by its normal means of attachment or as stated in the relevant specification. Any additional stays or straps should be avoided. Any connections to the equipment (such as cables, pipes, etc.) should be so arranged that they impose no more restraint or mass than they would when the equipment is installed in its operational position.

b) Equipment intended for use with vibration isolators should normally be tested with its isolators.

If it is not practicable to carry out a vibration test with the appropriate isolators, for example if the equipment is mounted with other equipment in a common mounting system or if the dynamic characteristics of the isolators are very variable (e.g. temperature-dependent), then it may be tested without the isolators at a different amplitude of vibration as stated in the relevant specification. This amplitude should be determined by taking into account that transmissibility of the isolator system in each axis which causes the most severe conditions of vibration.

Note. – The relevant specification may require an additional test on an equipment with the external isolators removed in order to demonstrate that a minimum acceptable structural resistance to vibration has been achieved.

c) The relevant specification shall state whether the effect of gravitational force is important. In this case, the equipment shall be so mounted that the force acts in the same direction as it would be used. Where the effect of gravitational force is not important, the equipment may be mounted in any attitude.

30.1.2.2 *Vibration system*

a) Required characteristics

The required characteristics of the vibration generator and fixture when loaded for the conditioning process shall be as follows.

Copyright International Electrotechnical Commission
Provided by IHS under license with IEC
No reproduction or networking permitted without license from IHS
Not for Resale

IEC 489 PT*1 83 ■ 4844891 0045477 6 ■

b) Mouvement fondamental

Le mouvement fondamental doit être sinusoïdal et tel que les points de fixation de spécimen se déplacent sensiblement en phase et suivant des directions rectilignes parallèles, compte tenu des prescriptions du point *c)* de ce paragraphe.

c) Mouvement transversal

L'amplitude maximale de vibration aux points de fixation du spécimen, dans toute direction perpendiculaire à la direction désirée (y compris les mouvements de lacet, de torsion, etc.), ne doit pas dépasser 25% de l'amplitude de vibration spécifiée.

Note. – Dans certains cas, par exemple pour les spécimens de grandes dimensions, il peut être difficile de tenir une limite de 25%. Dans ces cas, la valeur doit être notée et faire l'objet d'un accord entre constructeur et acheteur.

d) Distorsion

Le taux global d'harmoniques (exprimé en valeur efficace) de l'accélération aux points de fixation du spécimen, rapporté à l'accélération réelle correspondant à l'amplitude spécifiée à la fréquence d'excitation, ne doit pas dépasser 25% sauf s'il est compensé par un accroissement du niveau d'excitation tel qu'il rétablisse une amplitude à la fréquence fondamentale égale à l'amplitude spécifiée. Dans ce cas, la valeur du taux de distorsion doit être notée et faire l'objet d'un accord entre constructeur et acheteur.
La distorsion doit être mesurée dans une gamme de fréquences allant jusqu'à 5000 Hz ou jusqu'à cinq fois la fréquence d'excitation, la plus grande des deux valeurs étant prise en considération.

30.1.2.3 *Tolérances sur l'amplitude des vibrations*

L'amplitude réelle des vibrations, dans la direction requise, doit être égale à la valeur spécifiée avec les tolérances suivantes:

a) Au point de contrôle (qui peut être spécifié par la spécification particulière):

i) Dans la gamme de fréquences où l'amplitude du déplacement est spécifiée: ±15%.

ii) Dans la gamme de fréquences ou l'amplitude de l'accélération est spécifiée: ±10%.

b) En chacun des points de fixation spécifiés, d'après le tableau suivant:

Fréquence	Dans la gamme de fréquences où l'amplitude du déplacement est spécifiée	Dans la gamme de fréquences où l'amplitude de l'accélération est spécifiée
Jusqu'à 150 Hz Au-dessus de 150 Hz	±25% –	±15% ±25%

Note. – Dans certains cas, par exemple pour des spécimens de grande taille et/ou aux fréquences élevées, il peut être difficile de respecter les valeurs indiquées pour certaines fréquences réparties à l'intérieur de la gamme de fréquences. Dans de tels cas, il est souhaitable qu'une tolérance plus large ou qu'une autre méthode d'évaluation soit spécifiée et fasse l'objet d'un accord entre constructeur et acheteur.

30.1.2.4 *Tolérances des fréquences*

Les mesures effectuées lors de la détermination des fréquences de résonance doivent être effectuées avec une précision de ±0,5% ou de ±0,5 Hz, la plus grande des deux valeurs étant seule prise en considération.

Dans les autres cas, les tolérances sur la mesure des fréquences doivent être de ±1 Hz jusqu'à 50 Hz et de ±2% au-dessus de 50 Hz.

Copyright International Electrotechnical Commission
Provided by IHS under license with IEC
No reproduction or networking permitted without license from IHS Not for Resale

IEC 489 PT*1 83 ■ 4844891 0045478 8 ■

b) Basic motion

The basic motion shall be sinusoidal and such that the fixing points of the specimen are moving substantially in phase and in straight parallel lines, subject to the requirements of Item *c)* of this sub-clause.

c) Transverse motion

The maximum vibration amplitude at the fixing points of the specimen in any direction perpendicular to the intended direction (including that due to rocking, torsional vibration, etc.) shall not exceed 25% of the specified amplitude.

Note. – In some cases, for example for large specimens, it may be difficult to maintain a limit of 25%. In such cases, the value shall be noted and agreed between manufacturer and purchaser.

d) Distortion

The total r.m.s. harmonic content of the acceleration at the fixing points of the specimen, related to the actual acceleration corresponding to the specified amplitude at the driving frequency, shall not exceed 25% unless compensated for by increasing the driving amplitude so as to restore the amplitude at the fundamental frequency to the specified value. In such cases, the distortion value shall be noted and agreed between manufacturer and purchaser.

The distortion measurement shall cover the frequency range up to 5000 Hz or five times the driving frequency, whichever is the greater.

30.1.2.3 *Vibration amplitude tolerance*

The actual amplitude in the required direction shall be equal to the specified value, within the following tolerances:

a) At the control point (which may be specified by the relevant specification):

i) In the frequency range where displacement amplitude is specified: ±15%.

ii) In the frequency range where acceleration amplitude is specified: ±10%.

b) At each specified fixing point as given by the table below:

Frequency	In the frequency range where displacement amplitude is specified	In the frequency range where acceleration amplitude is specified
Up to 150 Hz	±25%	±15%
Above 150 Hz	–	±25%

Note. – In some cases, for example for large specimens and/or at high frequencies, it may be difficult to achieve the figures quoted at some discrete frequencies within the frequency range. In such cases, it is expected that a wider tolerance or an alternative method of assessment will be specified and agreed between manufacturer and purchaser.

30.1.2.4 *Frequency tolerances*

Measurement of frequency for resonance determination shall be made with a tolerance of ±0.5% or ±0.5 Hz, whichever is the greater.

Frequency tolerances in other cases shall be ±1 Hz up to 50 Hz and ±2% over 50 Hz.

Copyright International Electrotechnical Commission
Provided by IHS under license with IEC
No reproduction or networking permitted without license from IHS
Not for Resale

30.1.2.5 *Réalisation du balayage*

On appelle balayage le parcours de la gamme de fréquences spécifiée, une fois dans le sens des fréquences croissantes et une fois dans le sens des fréquences décroissantes, par exemple 10 Hz – 150 Hz – 10 Hz.

Le balayage doit être continu et logarithmique; la vitesse de balayage doit être approximativement de une octave par minute. On peut toutefois se contenter d'une approximation d'une telle loi en adoptant des sous-gammes à balayage linéaire à condition que, à tout instant, la vitesse réelle de balayage ne dépasse pas une octave par minute et que la durée du passage sur chaque octave au-delà de 60 Hz soit approximativement la même que dans le cas du balayage logarithmique. Pour la recherche des résonances, on peut, si nécessaire, réduire la vitesse de balayage ou s'arrêter temporairement, mais on doit éviter tout temps d'arrêt non justifié.

30.1.3 *Déroulement de l'essai*

30.1.3.1 *Recherche initiale des résonances*

Le matériel étant en fonctionnement dans les conditions normales d'essai, on doit effectuer une recherche initiale des résonances à la vitesse indiquée au paragraphe 30.1.2.5.

Le matériel doit normalement subir un balayage continu pendant une période de 15 min.

Véhicules terrestres à l'exception des motocyclettes

5 – 10 – 5 Hz avec un déplacement crête à crête constant de 7,5 mm.
10 – 60 – 10 Hz à une accélération de crête constante de 1,5 *g*.
60 – 150 – 60 Hz à une accélération de crête constante de 0,5 *g*.

Navires

5 – 12,5 – 5 Hz avec un déplacement crête à crête constant de 3,2 mm.
12,5 – 25 – 12,5 Hz avec un déplacement crête à crête constant de 0,8 mm.
25 – 50 – 25 Hz avec un déplacement crête à crête constant de 0,2 mm.

Avions

10 – 58 – 10 Hz avec un déplacement crête à crête constant de 0,15 mm.
58 – 1000 – 58 Hz à une accélération de crête constante de 2 *g*.

Hélicoptères

5 – 17 – 5 Hz avec un déplacement crête à crête constant de 2,5 mm.
17 – 55 – 17 Hz à une accélération de crête constante de 1,5 *g*.
55 – 78 – 55 Hz avec un déplacement crête à crête constant de 0,25 mm.
78 – 1000 – 78 Hz à une accélération de crête constante de 3 *g*.

(Ces valeurs sont illustrées par la figure 1, page 52.)

Des essais doivent être effectués pour chacune des trois orientations perpendiculaires entre elles de l'équipement. Une de ces trois orientations est l'orientation normale de l'opération.

Note. – Les amplitudes des vibrations ci-dessus sont exprimées en valeurs crête à crête (double de la valeur crête) du déplacement; les amplitudes des accélérations sont exprimées en valeur crête.

Copyright International Electrotechnical Commission
Provided by IHS under license with IEC
No reproduction or networking permitted without license from IHS
Not for Resale

30.1.2.5 *Sweep method*

A sweep is defined as a traverse of the specified frequency range once in each direction, for example 10 Hz – 150 Hz – 10 Hz.

The sweeping shall be continuous and logarithmic, and the sweep rate shall be approximately one octave per minute. A linear sweeping approximation may be used, provided the actual sweep rate does not exceed one octave per minute at any time and the duration of passage through each octave above 60 Hz is approximately the same as with the logarithmic sweep. Whilst resonance search testing, the sweep rate may be decreased or stopped temporarily if necessary, but undue dwell time should be avoided.

30.1.3 *Test procedure*

30.1.3.1 *Initial resonance search*

With the equipment operating under standard test conditions, an initial resonance search shall be made at the rate given in Sub-clause 30.1.2.5.

The equipment should be swept continuously for a period of 15 min.

Land vehicles except motor cycles

5 – 10 – 5 Hz at a constant peak-to-peak displacement of 7.5 mm.
10 – 60 – 10 Hz at a constant peak acceleration of 1.5 *g*.
60 – 150 – 60 Hz at a constant peak acceleration of 0.5 *g*.

Ships

5 – 12.5 – 5 Hz at a constant peak-to-peak displacement of 3.2 mm.
12.5 – 25 – 12.5 Hz at a constant peak-to-peak displacement of 0.8 mm.
25 – 50 – 25 Hz at a constant peak-to-peak displacement of 0.2 mm.

Aircraft

10 – 58 – 10 Hz at a constant peak-to-peak displacement of 0.15 mm.
58 – 1000 – 58 Hz at a constant peak acceleration of 2 *g*.

Helicopters

5 – 17 – 5 Hz at a constant peak-to-peak displacement of 2.5 mm.
17 – 55 – 17 Hz at a constant peak acceleration of 1.5 *g*.
55 – 78 – 55 Hz at a constant peak-to-peak displacement of 0.25 mm.
78 – 1000 – 78 Hz at a constant peak acceleration of 3 *g*.

(These values are illustrated in Figure 1, page 52.)

Tests shall be conducted for each of three mutually perpendicular orientations of the equipment, one of which is the normal operating orientation.

Note. – The vibration amplitudes quoted are given in terms of peak-to-peak or total (double) amplitude values. The acceleration amplitudes are given in terms of peak values.

Copyright International Electrotechnical Commission
Provided by IHS under license with IEC
No reproduction or networking permitted without license from IHS Not for Resale

30.1.3.2 *Epreuve d'endurance sur les fréquences de résonance*

Au cours de l'essai précédent, si des résonances potentiellement destructives sont mises en évidence, le matériel doit être soumis à un essai d'endurance à chacune des fréquences de résonance, pendant une durée de 30 min s'il s'agit de matériel maritime et pendant une durée de 60 min s'il s'agit de matériel aéronautique.

30.1.4 *Mesures finales*

Après avoir mesuré les caractéristiques électriques requises conformément aux méthodes décrites dans d'autres parties de cette norme, on doit soumettre le matériel à un examen visuel et noter tout dommage ou tout déplacement de composants qui risque d'entraîner une dégradation permanente ou de réduire la durée de vie du matériel.

30.2 *Chocs*

30.2.1 *Définition*

La résistance aux chocs est l'aptitude du matériel à maintenir certaines caractéristiques mécaniques et électriques spécifiées après un essai de chocs.

30.2.2 *Conditions de mesure*

Les conditions de mesure et le degré de sévérité attribués à la catégorie de matériel considérée doivent, de préférence, être choisis parmi ceux qui sont indiqués dans la Publication 68-2-27 de la CEI: Essai Ea: Chocs.

30.2.3 *Méthode de mesure*

A l'étude.

30.3 *Chutes libres*

Cet essai concerne les matériels personnels (catégorie C).

30.3.1 *Définition*

La résistance aux chutes est l'aptitude du matériel à conserver des caractéristiques mécaniques et électriques spécifiées après avoir été soumis à une chute spécifiée.

30.3.2 *Conditions de mesure*

Cet essai est généralement en accord avec la Publication 68-2-32 de la CEI: Essai Ed: Chute libre.

Pendant l'essai, le matériel en essai doit être équipé de ses batteries et d'une antenne, mais il ne doit pas être mis en fonctionnement.

L'essai doit être effectué dans les conditions d'essai atmosphériques normales.

La surface d'essai doit être la surface lisse d'un bois dur.

La hauteur comprise entre le fond et la surface d'essai est de 0,5 m.

Notes 1. – Cet essai est destiné en premier lieu aux spécimens non emballés et aux objets placés dans leurs coffrets de transport lorsque ces derniers peuvent être considérés comme faisant partie des spécimens eux-mêmes.

2. – Si le matériel est destiné à être utilisé, par exemple, avec un microphone et/ou un haut-parleur, chacun de ces accessoires doit être soumis séparément à cet essai.

Copyright International Electrotechnical Commission
Provided by IHS under license with IEC
No reproduction or networking permitted without license from IHS Not for Resale

30.1.3.2 *Resonance dwell*

During the above test, if potentially damaging resonances are found, the equipment shall be subject to a conditioning test at each resonant frequency for a period of 30 min for maritime equipment and 60 min for aeronautical equipment.

30.1.4 *Requirements*

After measuring the required electrical characteristics in conformity with the methods described in other parts of this standard, the equipment shall be inspected and any evidence of visible damage or movement of components such as might result in permanent damage or shortened life of the equipment, shall be noted.

30.2 *Shock*

30.2.1 *Definition*

Shock stability is the ability of the equipment to maintain specified mechanical and electrical performance after being shocked.

30.2.2 *Conditions of measurement*

The conditions of measurement and the degree of severity appropriate to the category of equipment considered should preferably be selected from those specified in IEC Publication 68-2-27: Test Ea: Shock.

30.2.3 *Method of measurement*

Under consideration.

30.3 *Drop (free fall)*

This test is applicable to personal equipment (Category C).

30.3.1 *Definition*

The immunity to drop is the ability of an equipment to maintain the specified mechanical and electrical performance after being subjected to a specified drop.

30.3.2 *Test conditions*

This test is generally in accordance with IEC Publication 68-2-32: Test Ed: Free fall.

During the test the set under test shall be fully equipped with a set of batteries and antenna but shall not be operating.

The test shall be carried out at the standard atmospheric test conditions.

The test surface shall be smooth, hard wood.

The height between the bottom side and the test surface is 0.5 m.

Notes 1. – This test is primarily intended for specimens not in their packing and for items in their transport case when the latter may be considered as part of the specimen itself.

2. – If the equipment is intended to be used with, for example, a separated microphone and/or loudspeaker, the test shall also be made for those accessories separately.

Copyright International Electrotechnical Commission
Provided by IHS under license with IEC
No reproduction or networking permitted without license from IHS Not for Resale

IEC 489 PT*1 83 ■ 4844891 0045483 1 ■

30.3.3 *Déroulement de l'essai*

L'une des phases de l'essai consiste à laisser tomber le matériel à l'essai depuis une position où l'une des faces constitue le côté inférieur parallèle à la surface d'essai.

L'essai doit être effectué en utilisant consécutivement chaque face du matériel comme côté inférieur.

30.3.4 *Mesures finales*

Après avoir mesuré les caractéristiques électriques requises, conformément aux méthodes décrites dans d'autres parties de cette norme, on doit soumettre le matériel à un examen visuel et noter tout dommage mécanique.

Aucun dommage permanent ne doit dégrader le fonctionnement du matériel. En particulier, de telles parties que les boutons, les commutateurs et l'antenne doivent fonctionner normalement.

30.4 *Sable et poussières*

30.4.1 *Définition*

La résistance au sable et aux poussières est l'aptitude d'un matériel à conserver les caractéristiques mécaniques et électriques requises après avoir été placé dans une atmosphère de sable et de poussières.

30.4.2 *Déroulement de l'essai*

Le matériel doit être installé dans une chambre d'essai pour sable et poussières, dans sa position normale de fonctionnement; les dimensions de la chambre doivent être telles que le matériel n'occupe pas plus de 50% d'une section plane quelconque de la chambre.

La température de la chambre doit être maintenue à 35±2°C et l'humidité relative ne doit pas excéder 60% pendant toute la durée de l'essai.

Les particules de sable et les particules de poussières, dont la taille est précisée ci-après, doivent être introduites dans la chambre en proportions de poids égales et leur concentration doit être maintenue à $1{,}4^{+1}_{-0}$ g/m^3 pendant la durée de l'essai. La vitesse de l'air doit être comprise entre 25 km/h et 50 km/h. Ces conditions doivent être maintenues pendant 1 h.

Composition des poussières: quelconque mais ne rendant pas l'atmosphère explosive; taille des particules comprise entre 0 µm et 150 µm.

Composition du sable: au moins 90% de silice (SiO_2) et de silicates d'alumine; taille des particules comprise entre 100 µm et 1000 µm dont 90% entre 150 µm et 425 µm.

Note. – La taille d'une particule est sa dimension linéaire maximale.

30.4.3 *Mesures finales*

Après exposition au sable et aux poussières, mesurer les caractéristiques électriques requises conformément aux méthodes décrites dans d'autres parties de la norme.

30.5 *Pluie dirigée*

30.5.1 *Définition*

Cet essai a pour but d'évaluer l'aptitude du matériel à conserver les caractéristiques mécaniques et électriques requises après avoir été soumis à une pluie battante en présence d'un vent violent.

Copyright International Electrotechnical Commission
Provided by IHS under license with IEC
No reproduction or networking permitted without license from IHS Not for Resale

30.3.3 *Test procedure*

The equipment under test shall be dropped once from a position such that one of its sides acts as the bottom side and is released parallel to the test surface.

The test shall be made with each of the sides of the equipment acting as the bottom.

30.3.4 *Requirements*

After measuring the required electrical characteristics in conformity with the methods required in other parts of this standard, the equipment shall be inspected and any mechanical damage shall be recorded.

Any permanent damage shall not impair the operation of the equipment. In particular, parts like knobs, switches, and the antenna shall operate in the normal manner.

30.4 *Dust and sand*

30.4.1 *Definition*

The immunity to dust and sand is the ability of the equipment to maintain the required mechanical and electrical performance after being subjected to an environment of dust and sand.

30.4.2 *Test procedure*

The equipment shall be mounted in a suitable dust/sand test chamber in its normal operating position such that the equipment does not occupy more than 50% of the cross-sectional area of the chamber in any plane.

The temperature of the chamber shall be maintained at 35±2°C with a relative humidity not exceeding 60% for the duration of the test.

Dust and sand, in equal parts by weight, and of grade shown below, shall be introduced into the chamber and maintained at a concentration of 1.4^{+1}_{0} g/m^3 for the duration of the test. The air velocity shall be between 25 km/h and 50 km/h and the test conditions shall be maintained for a period of 1 h.

Dust grade: non explosive; particle size 0 μm to 150 μm.

Sand grade: not less than 90% silica (SiO_2) and aluminium silicates of particle size 100 μm to 1 000 μm, with 90% between 150 μm and 425 μm.

Note. – Particle size is the maximum linear dimension of the particle.

30.4.3 *Requirements*

After exposure to sand and dust, measure the required electrical characteristics in conformity with the methods described in other parts of this standard.

30.5 *Driving rain*

30.5.1 *Definition*

This test is designed to assess the ability of the equipment to maintain the required mechanical and electrical performance after being subjected to conditions of heavy rain, together with strong wind.

Copyright International Electrotechnical Commission
Provided by IHS under license with IEC
No reproduction or networking permitted without license from IHS Not for Resale

IEC 489 PT*1 83 ■ 4844891 0045485 5 ■

30.5.2 *Déroulement de l'essai*

30.5.2.1 *Généralités*

L'essai doit être effectué comme indiqué ci-après. Utiliser de l'eau à la température de la chambre pendant toute la durée de l'essai et soumettre le matériel à une rotation continue à une vitesse comprise entre 12 tours/min et 20 tours/min autour d'un axe vertical passant par le centre du matériel.

Le matériel destiné à être utilisé dans les conditions définies au paragraphe 30.5.1 doit être placé dans sa position normale d'utilisation; toutes les protections destinées uniquement au stockage du matériel devront être supprimées.

30.5.2.2 *Contrôle initial*

Le matériel doit être examiné visuellement avant d'être soumis aux vérifications mécaniques et électriques prescrites par la spécification particulière. Tous les dispositifs d'étanchéité doivent être vérifiés pour s'assurer qu'ils ont été montés correctement.

30.5.2.3 *Préconditionnement*

Lorsque la spécification particulière le prescrit, le matériel et ses scellements doivent être soumis au préconditionnement spécifié, par exemple à des cycles de température.

30.5.2.4 *Epreuve*

Le matériel doit être soumis aux jets d'eau issus de huit pommes de douche. Les jets issus de quatre pommes de douche doivent être dirigés vers le bas sous un angle de 45° vers chacun des quatre coins supérieurs du matériel à l'essai. Les jets des quatre autres pommes de douche doivent être dirigés horizontalement vers l'endroit le plus vulnérable de chacune des quatre faces du matériel, comme indiqué par la spécification particulière.

Les pommes de douche doivent être placées à une distance comprise entre 500 mm et 750 mm de chaque coin ou de chaque face du spécimen en essai ou à la distance prescrite par la spécification particulière.

Les dimensions des pommes du douche indiquées sur la figure 2, page 53, sont telles qu'elles produisent un cône d'eau dont l'angle au sommet est approximativement égal à 35° (voir figure 3, page 54).

Note. – L'utilisation de ces pommes de douches conduit à un débit d'eau d'environ 450 l/h pour une surpression de 200 000 Pa.

Le matériel, sauf spécification contraire, doit être soumis à l'essai dans sa position normale de montage.

Si la spécification particulière le prescrit, le matériel doit être mis en fonctionnement pendant l'épreuve.

Les valeurs suivantes de durée d'exposition doivent être utilisées:

- stations de navire 60 min;
- stations terrestres 10 min;
- stations «personnelles» 2 min;
- stations d'aéronef 5 min.

30.5.2.5 *Reprise*

Sauf spécification contraire, les surfaces externes du matériel doivent être séchées par essuyage ou par application d'un courant d'air à la température du laboratoire.

Note. – Il convient de veiller à ce que la méthode de séchage de la surface externe ne fasse pas entrer d'eau dans le matériel.

Copyright International Electrotechnical Commission
Provided by IHS under license with IEC
No reproduction or networking permitted without license from IHS Not for Resale

30.5.2 *Test procedure*

30.5.2.1 *General*

The test procedure shall be as detailed below. Fresh water at room temperature shall be used, and throughout the test the equipment shall be continuously rotated between 12 revs/min and 20 revs/min about a vertical axis passing through the centre of the equipment.

Equipment intended to be operated in the conditions defined in Sub-clause 30.5.1 shall be arranged in its normal operating position with any covers intended purely for storage purposes removed.

30.5.2.2 *Initial inspection*

The equipment shall be visually inspected before it is electrically and mechanically checked as required by the relevant specification. All sealing features shall be checked as to whether they have been mounted correctly.

30.5.2.3 *Pre-conditioning*

Pre-conditioning of the equipment and seals shall be carried out if required by the relevant specification, for example by temperature cycling.

30.5.2.4 *Conditioning*

The equipment shall be subjected to a shower of water from eight shower heads. The water from four of the shower heads shall be directed downwards at an angle of 45° at each of the four uppermost corners of the specimen under test. The water from the remaining four shower heads shall be directed horizontally to the most vulnerable spot of the area of each of the four sides as indicated by the relevant specification.

The shower heads shall be located at a distance of 500 mm to 750 mm from the corners or sides of the specimen under test or at the distance as required by the relevant specification.

The shower heads illustrated in Figure 2, page 53, are such that they will provide a cone angle of approximately 35°C (see Figure 3, page 54).

Note. – Use of this head will lead to water consumption of approximately 450 l/h with an overpressure of 200 000 Pa.

The equipment shall be subjected to the test in its normal mounting position, unless otherwise specified.

If required by the relevant specification, the equipment shall be operated during conditioning.

The following values for periods of exposure are to be used:

- ship stations 60 min;
- land stations 10 min;
- personal stations 2 min;
- aircraft stations 5 min.

30.5.2.5 *Recovery*

The external surfaces of the specimens shall be dried by wiping or by applying a blast of air at room temperature unless otherwise specified.

Note. – Care should be taken that the method of drying the external surface does not force water into the equipment.

Copyright International Electrotechnical Commission
Provided by IHS under license with IEC
No reproduction or networking permitted without license from IHS Not for Resale

IEC 489 PT*1 83 ■ 4844891 0045487 9 ■

30.5.3 *Mesures finales*

Après avoir mesuré les caractéristiques électriques requises conformément aux méthodes décrites dans d'autres parties de cette norme, on doit soumettre le matériel à un examen visuel et noter tout indice de pénétration indue d'eau.

30.6 *Corrosion (brouillard salin)*

30.6.1 *Définition*

Cet essai a pour but d'évaluer l'aptitude du matériel à conserver les caractéristiques mécaniques et électriques requises après qu'il a été placé dans une atmosphère corrosive.

30.6.2 *Déroulement de l'essai*

Placer le matériel dans une chambre munie d'un appareillage apte à produire une pulvérisation sous la forme d'un brouillard salin tel que celui qui serait obtenu avec un pistolet pulvérisateur. La solution saline utilisée doit contenir:

Pour utilisation à bord des navires:
26,5 g de chlorure de sodium
2,4 g de chlorure de magnésium
3,3 g de sulfate de magnésium
1,1 g de chlorure de calcium
0,73 g de chlorure de potassium
0,2 g de bicarbonate de sodium
0,28 g de bromure de sodium

Pour utilisation sur véhicules terrestres:
50 g de chlorure de sodium

plus la quantité d'eau distillée nécessaire pour 1 litre de solution

Les proportions ci-dessus doivent être respectées avec une tolérance de ±10%.

L'appareil de pulvérisation doit être tel que les produits de corrosion ne puissent pas se mélanger à la solution saline contenue dans le réservoir de l'appareil.

Le matériel doit être soumis à la pulvérisation simultanément sur toutes ses faces externes avec la solution saline en nébulisation.

Le matériel pour navires doit être soumis à une pulvérisation pendant 1 h et être maintenu en fonctionnement au cours des 30 dernières minutes de l'essai. Celui-ci doit être effectué quatre fois avec une période de stockage de 7 jours à 40±1°C entre les essais successifs. L'humidité relative en cours de stockage doit être maintenue entre 90% et 95%.

Le matériel pour utilisation terrestre doit être exposé pendant 48 h à une température de 35±2°C, sans fonctionner. Il doit être ensuite stocké pendant 48 h dans les conditions atmosphériques normales pour les essais, puis mesuré.

30.6.3 *Mesures finales*

Après avoir mesuré les caractéristiques électriques requises conformément aux méthodes décrites dans d'autres parties de la présente norme, on doit soumettre le matériel à un examen visuel et noter toute dégradation de parties métalliques, de finitions, de matériaux ou de composants. Dans le cas de matériels déclarés étanches, noter toute trace de pénétration d'humidité.

Cet essai n'est pas requis pour du matériel portatif.

Copyright International Electrotechnical Commission
Provided by IHS under license with IEC
No reproduction or networking permitted without license from IHS
Not for Resale

30.5.3 *Requirements*

After measuring the required electrical characteristics in conformity with the methods described in other parts of this standard, the equipment shall be inspected and any evidence of water penetration shall be noted.

30.6 *Corrosion (salt fog)*

30.6.1 *Definition*

This test is designed to assess the ability of the equipment to maintain the required mechanical and electrical performance after being subjected to a corrosive atmosphere.

30.6.2 *Test procedure*

The equipment shall be placed in a chamber fitted with apparatus capable of spraying in the form of fog, such as would be produced by a spray gun. The salt solution used shall contain:

For shipboard use:		*For land vehicle use:*
sodium chloride	26.5 g	sodium chloride 50 g
magnesium chloride	2.4 g	
magnesium sulphate	3.3 g	
calcium chloride	1.1 g	
potassium chloride	0.73 g	
sodium bicarbonate	0.2 g	
sodium bromide	0.28 g	

plus distilled water to make the solution up to 1 litre.

The quantity of each salt shall be subject to a tolerance of ±10%.

The spraying apparatus shall be such that the products of corrosion cannot mix with the salt solution contained in the spray reservoir.

The equipment shall be sprayed simultaneously on all its external surfaces with the salt solution fog.

Equipment for ship use shall be sprayed for a period of 1 h and shall be kept operating continuously for the last 30 min thereof. This test shall be carried out four times with a storage period of 7 days at 40±1°C between the repetitions. The relative humidity during storage shall be between 90% and 95%.

Equipment for land use shall be exposed for 48 h at a temperature of 35±2°C with the equipment non-operational. The equipment will then be stored for 48 h in standard atmospheric testing conditions at which time it will be measured.

30.6.3 *Requirements*

After measuring the required electrical characteristics in conformity with the methods described given in other parts of the standard, the equipment shall be inspected and any deterioration of metal parts, finishes, materials or components shall be noted. In the case of hermetically sealed equipment, any evidence of moisture penetration shall be noted.

This test is not required for portable equipment.

Copyright International Electrotechnical Commission
Provided by IHS under license with IEC
No reproduction or networking permitted without license from IHS Not for Resale

SECTION NEUF – DURÉE DE VIE UTILE DE LA BATTERIE

31. Domaine d'application

Cette section, généralement, ne concerne que les matériels portatifs et les matériels personnels (catégories A/B, B et C).

32. Définitions

Les définitions des termes ci-dessous se rapportent à la durée utile de la batterie lorsque celle-ci est utilisée dans un matériel déterminé. La valeur de la tension de fin de vie et la durée de vie peuvent différer de celles spécifiées par le constructeur de la batterie.

32.1 *Durée de vie utile de la batterie (ou de la source d'énergie) dans les matériels portatifs et personnels*

Nombre ou fractions de jours pendant lesquels le matériel peut fonctionner dans les conditions spécifiées de fonctionnement intermittent avec le seul jeu spécifié de piles neuves ou d'accumulateurs entièrement chargés, avant que soit atteinte la tension de fin de vie.

32.2 *Tension de fin de vie*

Tension en charge (débit) de la batterie pour laquelle se produit une dégradation spécifiée des caractéristiques fonctionnelles globales du matériel.

33. Conditions de mesure

Le matériel doit être mis en fonctionnement dans des conditions normales de fonctionnement intermittent (selon l'article 24) et dans les conditions atmosphériques indiquées à l'article 26 avec le jeu spécifié de batteries neuves (piles) ou entièrement chargées (accumulateurs).

34. Méthode de mesure

Les caractéristiques fonctionnelles à observer sur le matériel doivent être déterminées suivant les dispositions des normes appropriées de cette série de publications. Mesurer le temps nécessaire pour atteindre la dégradation spécifiée de la caractéristique soumise au contrôle. Poursuivre l'essai jusqu'à ce que la tension de fin de vie du jeu de batteries, indiquée par la dégradation spécifiée de la caractéristique soumise au contrôle, soit atteinte.

Pour un émetteur ou un matériel dont la partie «émission» est alimentée par une batterie séparée, la fin de vie de cette batterie est, sauf spécification contraire, considérée comme atteinte lorsque:

- la puissance de sortie ou la puissance moyenne rayonnée est diminuée de 6 dB par rapport à la puissance nominale spécifiée par le constructeur, ou
- l'erreur de fréquence du signal radioélectrique dépasse la tolérance de fréquence spécifiée.

Pour un récepteur ou un matériel dont la partie réception est alimentée par une batterie séparée, la fin de vie de cette batterie est, sauf spécification contraire, considérée comme atteinte lorsque:

- la sensibilité de référence est diminuée de 6 dB par rapport à la sensibilité nominale spécifiée par le constructeur.

Copyright International Electrotechnical Commission
Provided by IHS under license with IEC
No reproduction or networking permitted without license from IHS
Not for Resale

SECTION NINE – USEFUL BATTERY LIFE

31. Scope

This section is normally applicable only to portable and personal equipment (Categories A/B, B and C).

32. Definitions

The terms below are defined in respect to the life of the battery when the latter is used in a particular equipment. The values of end-point voltage and battery life may differ from those specified by the battery manufacturer.

32.1 *Useful battery (or power supply) life in portable and personal equipment*

The number of days, or parts thereof, that the equipment will operate under specified conditions of intermittent operation on a single complement of specified, fresh or fully charged batteries, before the end-point voltage has been reached.

32.2 *End-point voltage*

The on-load voltage of the battery which results in a specified amount of degradation in the overall performance of the equipment.

33. Conditions of measurement

The equipment shall be operated under standard conditions of intermittent operation (according to Clause 24) under the atmospheric conditions mentioned in Clause 26 with a fresh or fully charged complement of specified batteries.

34. Method of measurement

The performance characteristics of the equipment should be determined in accordance with the relevant standards in this series of publications. Measure the time to reach a specified degradation of the characteristic under test. Continue the test until the end-point voltage of the battery complement, as indicated by a specified degradation of the characteristic under test, has been reached.

In a transmitter or in equipment, the transmitting part of which is supplied by a separate battery, the battery end-point, unless otherwise specified, is considered to be reached if:

– the output power or the average radiated power is reduced 6 dB from the manufacturer's rating, or

– the frequency error of the radio-frequency signal exceeds the specified frequency tolerance.

In a receiver or in equipment, the receiving part of which is supplied by a separate battery, the battery end-point, unless otherwise specified, is considered to be reached if:

– the reference sensitivity is reduced 6 dB from the manufacturer's rating.

Copyright International Electrotechnical Commission
Provided by IHS under license with IEC
No reproduction or networking permitted without license from IHS Not for Resale

IEC 489 PT*1 83 ■ 4844891 0045491 0 ■

Pour un matériel comprenant un émetteur et un récepteur alimentés par une batterie commune, la fin de vie est considérée comme atteinte lorsqu'une des conditions mentionnées ci-dessus est réalisée.

35. Présentation des résultats

La durée de vie de la batterie s'exprime en jours ou en fractions de jour. Un jour de vie représente 8 h de fonctionnement dans les conditions normales de fonctionnement intermittent suivant les dispositions de l'article 24.

Enregistrer la moyenne de trois épreuves effectuées soit successivement sur le même matériel, soit simultanément sur trois spécimens du même matériel.

Il est recommandé de tracer un graphique représentant la tension en fonctionnement de la batterie (en ordonnée) en fonction du temps (en abscisse), afin de vérifier l'indication relative à la tension normale d'essai spécifiée par le constructeur, suivant les dispositions de l'article 15.

Il est également recommandé de tracer des graphiques représentant les caractéristiques mesurées mentionnées à l'article 34 (en ordonnée) en fonction du temps (en abscisse).

La température ambiante, l'humidité et les détails concernant le facteur d'utilisation doivent être indiqués avec les résultats de mesure.

SECTION DIX – DIMENSIONS ET POIDS

36. Définition des dimensions

Par dimensions, on entend l'espace occupé par le matériel principal tous ses accessoires amovibles étant retirés.

37. Méthode de mesure

Les dimensions du matériel principal doivent être mesurées dans trois directions: profondeur, largeur et hauteur. Les trois dimensions seront données hors tout. On doit répertorier les accessoires non inclus dans les dimensions du matériel principal, mais qui peuvent être fixés de façon temporaire ou permanente sur ce dernier, et qui sont nécessaires à son fonctionnement.

38. Définition du poids

Le poids d'un matériel englobe celui du matériel principal et celui de tous les accessoires nécessaires pour l'utilisation projetée.

39. Méthode de mesure

On doit peser le matériel avec tous les accessoires de montage nécessaires pour l'utilisation projetée.

Copyright International Electrotechnical Commission
Provided by IHS under license with IEC
No reproduction or networking permitted without license from IHS
Not for Resale

In equipment comprising a receiver and a transmitter supplied by a common battery, the battery end-point is determined by one of the conditions mentioned above.

35. Presentation of the results

Battery life is expressed in days, or parts thereof. One day of life is 8 h of operation at standard conditions of intermittent operation according to Clause 24.

Record the average of three trials, performed either consecutively on the same equipment or simultaneously on three specimens of the equipment.

It is recommended that a graph should be plotted representing the on-load voltage of the battery (on the ordinate) as a function of time (on the abscissa), in order to check the requirement with regard to the standard test voltage specified by the manufacturer, as given in Clause 15.

It is also recommended that graphs should be plotted representing the measured characteristics mentioned in Clause 34 (on the ordinate) as a function of time (on the abscissa).

The ambient temperature, the humidity and particulars regarding the duty-cycle shall be stated with the results of the measurements.

SECTION TEN – SIZE AND WEIGHT

36. Definition of size

The size is a measure of the space occupied by the basic equipment with all detachable accessories removed.

37. Method of measurement

The size of the basic equipment case shall be measured in the three dimensions: depth, width and height. The three dimensions should be obtained from the inside of a rectangular box which is large enough to contain the basic equipment case. Accessories not included with the size of the basic equipment, which may be temporarily or permanently attached to the basic equipment and are necessary to its use, should be listed.

38. Definition of weight

The weight of the equipment includes that of the basic equipment and accessories required for the intended use.

39. Method of measurement

The equipment shall be weighed, including all mounting accessories required for operation during its intended use.

Copyright International Electrotechnical Commission
Provided by IHS under license with IEC
No reproduction or networking permitted without license from IHS
Not for Resale

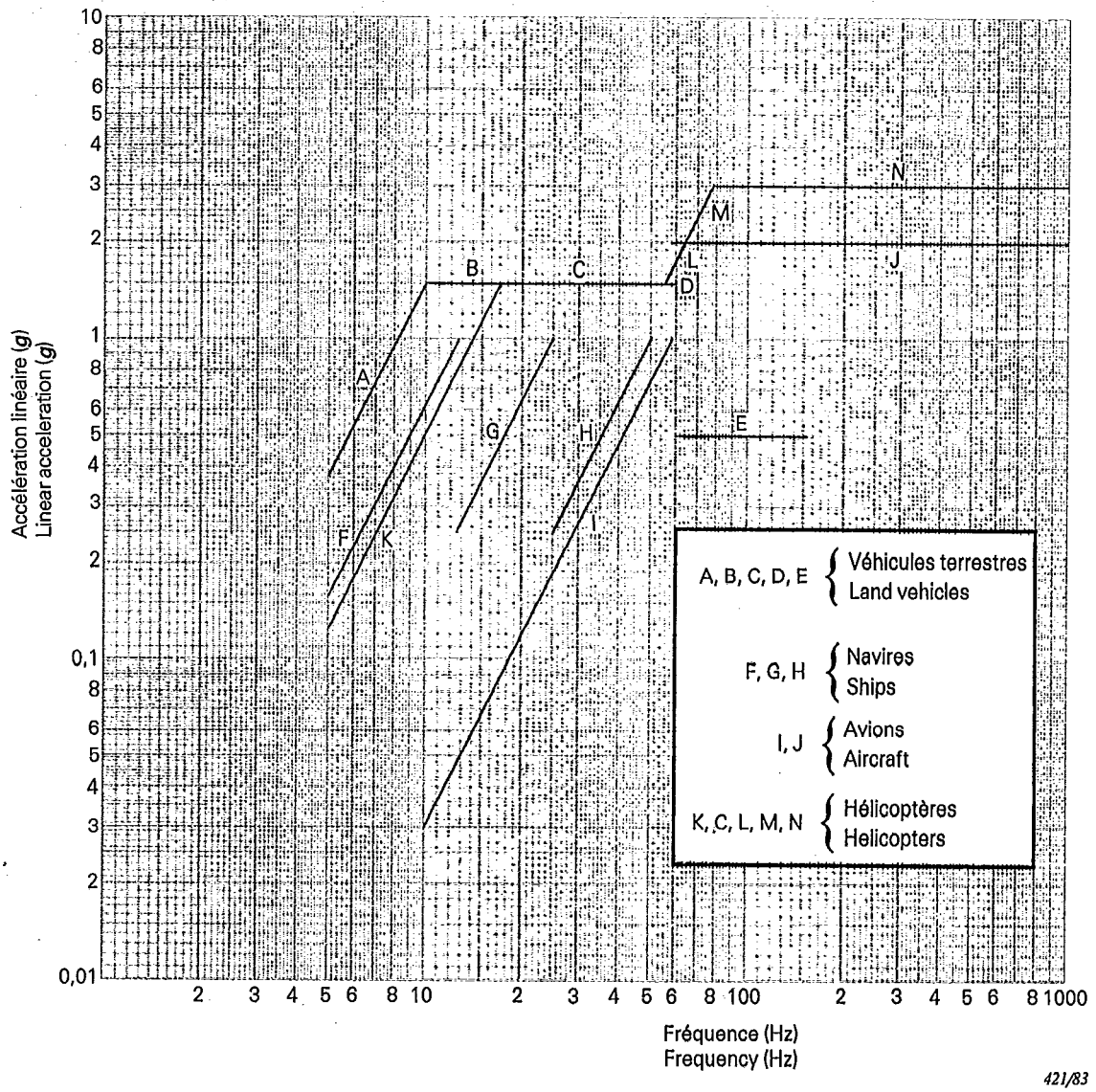

FIG. 1. – Tableau de recherche des résonances.
Resonance search schedule.

Copyright International Electrotechnical Commission
Provided by IHS under license with IEC
No reproduction or networking permitted without license from IHS
Not for Resale

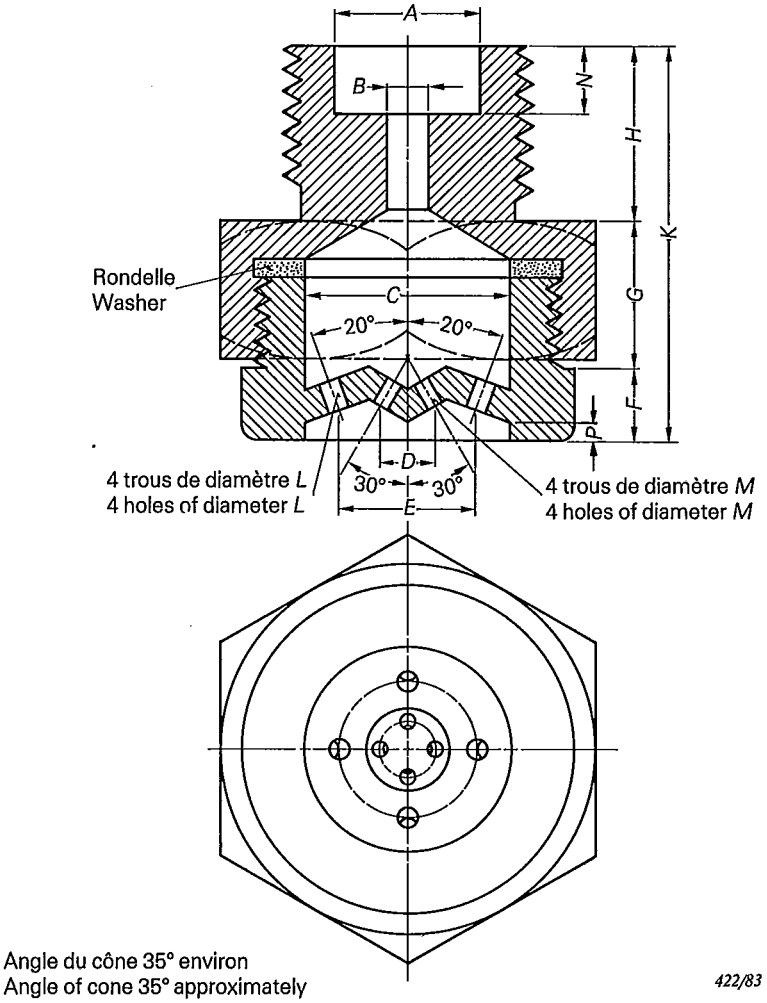

Référence	*A*	*B*	*C*	*D*	*E*	*F*	*G*	*H*	*K*	*L*	*M*	*O*	*P*
mm	13,5	3,8	19,0	5,6	12,7	6,35	13,5	15,9	35,7	2,3	1,6	6,35	1,6

FIG. 2. – Pomme de douche.
Shower head.

Copyright International Electrotechnical Commission
Provided by IHS under license with IEC
No reproduction or networking permitted without license from IHS
Not for Resale

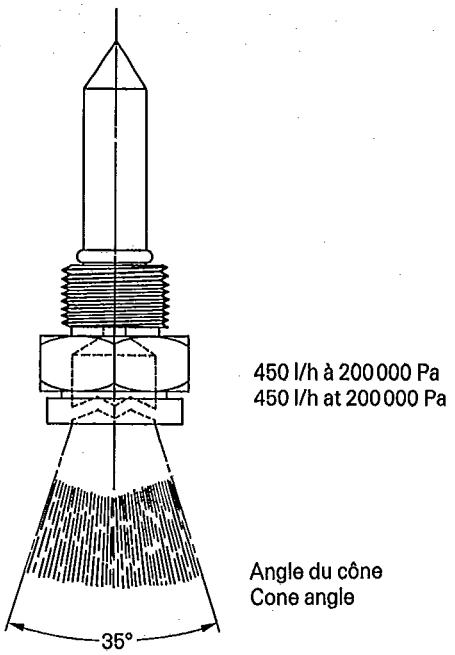

FIG. 3. – Forme du cône d'eau pulvérisée.
Shower head spray pattern.

Copyright International Electrotechnical Commission
Provided by IHS under license with IEC
No reproduction or networking permitted without license from IHS

Not for Resale

Publications de la CEI préparées par le Comité d'Etudes n°12

65 (1976) Règles de sécurité pour les appareils électroniques et appareils associés à usage domestique ou à usage général analogue, reliés à un réseau.
Quatrième édition comprenant la Modification n° 1 (1978).
Modification n° 2 (1981).

91 (1958) Méthodes recommandées pour les mesures sur les récepteurs radiophoniques pour émissions de radiodiffusion à modulation de fréquence.

106 (1974) Méthodes recommandées pour les mesures des perturbations émises par rayonnement et par conduction par les récepteurs de radiodiffusion à modulation d'amplitude et à modulation de fréquence et par les récepteurs de télévision.
Modification n° 1 (1983).

107: — Méthodes recommandées pour les mesures sur les récepteurs de télévision.

107-1 (1977) Première partie: Considérations générales. Mesures électriques autres que celles à fréquences acoustiques.

107-2 (1980) Deuxième partie: Mesures électriques et acoustiques à fréquences acoustiques.

215 (1978) Règles de sécurité applicables aux matériels d'émission radioélectrique.

244: — Méthodes de mesure applicables aux émetteurs radioélectriques.

244-1 (1968) Première partie: Conditions générales de mesure, fréquence, puissance de sortie et puissance consommée.
Modification n° 1 (1973).

244-1A (1968) Premier complément: Annexes.
Modification n° 1 (1973).

244-2 (1969) Deuxième partie: Largeur de bande, puissance hors bande et puissance des oscillations non essentielles.
Modification n° 1 (1974).

244-2A (1969) Premier complément: Annexes.
Modification n° 1 (1973).

244-2B (1969) Deuxième complément: Signaux modulants pour la mesure de la largeur de bande et de la puissance hors bande d'émetteurs de radiotéléphonie et de radiodiffusion sonore.

244-3 (1972) Troisième partie: Modulation utile et modulation parasite.

244-3A (1971) Premier complément: Annexes.

244-3B (1972) Deuxième complément: Modulation parasite.

244-4 (1973) Quatrième partie: Caractéristiques amplitude/fréquence et distorsion de non-linéarité dans les émetteurs de radiotéléphonie et de radiodiffusion sonore.

244-4A (1976) Premier complément: Section trois.

244-5 (1971) Cinquième partie: Mesures relatives aux émetteurs et réémetteurs de télévision en noir et blanc et de télévision en couleur.

244-5A (1971) Premier complément: Annexes.

244-5B (1975) Deuxième complément: Sections cinq et six.
Modification n° 1 (1978).

244-5C (1977) Troisième complément: Section sept — Modulation parasite, y compris intermodulation.

244-6 (1976) Sixième partie: Rayonnement des structures aux fréquences comprises entre 130 kHz et 1 GHz.

244-7 (1979) Septième partie: Rayonnement des structures aux fréquences supérieures à 1 GHz.

244-7A (1980) Premier complément: Section quatre — Emetteurs de moyennes dimensions, Section cinq — Gros émetteurs.

244-8 (1980) Huitième partie: Démodulateurs à bande latérale résiduelle utilisés avec des émetteurs ou des réémetteurs de télévision en noir et blanc ou de télévision en couleur.

244-9 (1982) Neuvième partie: Réémetteurs de télévision en noir et blanc et de télévision en couleur.

315: — Méthodes pour les mesures sur les récepteurs radioélectriques pour diverses classes d'émission.

315-1 (1970) Première partie: Conditions générales de mesure et méthodes de mesure applicables à divers types de récepteurs.

315-1A (1971) Premier complément: Annexe A: Recueil de dispositifs d'entrée pour antenne magnétique.

315-2 (1971) Deuxième partie: Mesures particulières à la partie à fréquence acoustique d'un récepteur.

315-3 (1973) Troisième partie: Mesures aux fréquences radioélectriques sur les récepteurs pour émissions à modulation d'amplitude.

315-4 (1982) Quatrième partie: Mesures aux fréquences radioélectriques sur les récepteurs pour émissions en modulation de fréquence.

315-5 (1971) Cinquième partie: Mesures aux fréquences radioélectriques. Mesures sur les récepteurs pour émissions à modulation de fréquence de la réponse aux brouillages de caractère impulsif.

315-8 (1975) Huitième partie: Mesures aux fréquences radioélectriques sur les récepteurs à usages professionnels pour émissions de télégraphie à modulation de fréquence.

(Suite au verso)

IEC publications prepared by Technical Committee No. 12

65 (1976) Safety requirements for mains operated electronic and related apparatus for household and similar general use.
Fourth edition including Amendment No. 1 (1978).
Amendment No. 2 (1981).

91 (1958) Recommended methods of measurement on receivers for frequency-modulation broadcast transmissions.

106 (1974) Recommended methods of measurement of radiated and conducted interference from receivers for amplitude-modulation, frequency-modulation and television broadcast transmissions.
Amendment No. 1 (1983).

107: — Recommended methods of measurement on receivers for television broadcast transmissions.

107-1 (1977) Part 1: General considerations. Electrical measurements other than those at audio-frequencies.

107-2 (1980) Part 2: Electrical and acoustic measurements at audio-frequencies.

215 (1978) Safety requirements for radio transmitting equipment.

244: — Methods of measurement for radio transmitters.

244-1 (1968) Part 1: General conditions of measurement, frequency, output power and power consumption.
Amendment No. 1 (1973).

244-1A (1968) First supplement: Appendices.
Amendment No. 1 (1973).

244-2 (1969) Part 2: Bandwidth, out-of-band power and power of non-essential oscillations.
Amendment No. 1 (1974).

244-2A (1969) First supplement: Appendices.
Amendment No. 1 (1973).

244-2B (1969) Second supplement: Modulating signals for the measurement of bandwidth and out-of-band power of transmitters for telephony and sound broadcasting.

244-3 (1972) Part 3: Wanted and unwanted modulation.

244-3A (1971) First supplement: Appendices.

244-3B (1972) Second supplement: Unwanted modulation, including hum and noise modulation.

244-4 (1973) Part 4: Amplitude/frequency characteristics and non-linearity distortion in transmitters for radiotelephony and sound broadcasting.

244-4A (1976) First supplement: Section Three.

244-5 (1971) Part 5: Measurements particular to transmitters and transposers for monochrome and colour television.

244-5A (1971) First supplement: Appendices.

244-5B (1975) Second supplement: Sections Five and Six.
Amendment No. 1 (1978).

244-5C (1977) Third supplement: Section Seven — Unwanted modulation, including hum, noise and intermodulation.

244-6 (1976) Part 6: Cabinet radiation at frequencies between 130 kHz and 1 GHz.

244-7 (1979) Part 7: Cabinet radiation at frequencies above 1 GHz.

244-7A (1980) First supplement: Section Four — Medium-sized transmitters, Section Five — Large transmitters.

244-8 (1980) Part 8: Vestigial-sideband demodulators for use in conjunction with transmitters or transposers for monochrome or colour television.

244-9 (1982) Part 9: Transporters for monochrome and colour television.

315: — Methods of measurement on radio receivers for various classes of emission.

315-1 (1970) Part 1: General conditions for measurements and measuring methods applying to several types of receivers.

315-1A (1971) First supplement: Appendix A: Survey of input arrangements for magnetic aerials.

315-2 (1971) Part 2: Measurements particularly related to the audio-frequency part of a receiver.

315-3 (1973) Part 3: Radio-frequency measurements on receivers for amplitude-modulated emissions.

315-4 (1982) Part 4: Radio-frequency measurements on receivers for frequency modulated sound-broadcasting emissions.

315-5 (1971) Part 5: Specialized radio-frequency measurements. Measurement on frequency-modulated receivers of the response to impulsive interference.

315-8 (1975) Part 8: Radio-frequency measurements on professional receivers for frequency-modulated telegraphy systems.

(Continued overleaf)

Copyright International Electrotechnical Commission
Provided by IHS under license with IEC
No reproduction or networking permitted without license from IHS
Not for Resale

Publications de la CEI préparées par le Comité d'Etudes n°12 *(suite)*

487: — Méthodes de mesure applicables au matériel utilisé dans les faisceaux hertziens terrestres.

487-1 (1974) Première partie: Mesures communes aux sous-ensembles et aux liaisons simulées.

487-1A (1980) Premier complément: Paragraphe 105.2: Conditions concernant les sources de courant continu.

487-1-4 (1981) Première partie: Mesures communes aux sous-ensembles et aux liaisons simulées. Section quatre — Mesures en bande de base.

487-2: — Deuxième partie: Mesures sur les sous-ensembles.

487-2-1 (1981) Section un — Généralités.

487-2-2 (1981) Section deux — Matériel de commutation sur canal de secours.

487-3 (1975) Troisième partie: Liaisons simulées.

487-3-2 (1981) Section deux — Mesures en bande de base.

487-3-3 (1981) Section trois — Mesures concernant la transmission de la télévision monochrome ou en couleur.

487-3-4 (1982) Section quatre — Mesures pour la transmission de la téléphonie multivoie à m.r.f.

487-3-5 (1982) Section cinq — Mesure des brouillages mutuels.

489: — Méthodes de mesure applicables au matériel de radiocommunication utilisé dans les services mobiles.

489-1 (1983) Première partie: Définitions générales et conditions normales de mesure.

489-2 (1978) Deuxième partie: Emetteurs utilisant les émissions A3 ou F3.

489-2A (1981) Premier complément: Articles 11 et 14.

489-3 (1979) Troisième partie: Récepteurs conçus pour les émissions A3 ou F3.

489-3A (1981) Premier complément: Article 19.

489-4 (1980) Quatrième partie: Emetteurs conçus pour les émissions à bande latérale unique (A3A, A3H ou A3J).

489-5 (1979) Cinquième partie: Récepteurs conçus pour les émissions à bande latérale unique (A3A, A3H ou A3J).

489-5A (1981) Premier complément: Article 17.

489-6 (1974) Sixième partie: Méthodes de mesure pour matériel de signalisation.

489-6A (1976) Premier complément: Matériel d'appel sélectif. Fréquences acoustiques utilisées couramment dans les systèmes de signalisation à tonalités.

489-6B (1977) Matériel d'appel sélectif. Mesures dans la bande des fréquences acoustiques. Mesures globales en simulation de système.

489-7 (1976) Septième partie: Systèmes de secret. Définitions supplémentaires.

491 (1974) Règles de sécurité pour les appareils électroniques à éclairs pour la photographie.

510: — Méthodes de mesure pour les équipements radioélectriques utilisés dans les stations terriennes de télécommunications par satellites.

510-1 (1975) Première partie: Généralités.

510-1A (1980) Premier complément: Paragraphe 6.2: Conditions concernant les sources de courant continu.

510-1-3 (1980) Première partie: Mesures communes aux sous-ensembles et à leurs combinaisons. Section trois: Mesures dans la bande des fréquences intermédiaires.

510-2: — Deuxième partie: Mesures sur les sous-ensembles.

510-2-1 (1978) Deuxième partie: Section un — Généralités. Section deux — Antenne, ensemble d'excitation hyperfréquence inclus.

510-3: — Troisième partie: Méthodes de mesure applicables aux combinaison de sous-ensembles.

510-3-1 (1981) Troisième partie: Section un — Généralités

510-3-2 (1980) Troisième partie: Section deux — Mesure du facteur de qualité *(G/T)* du système de réception dans la gamme de 4 GHz à 6 GHz.

543 (1976) Guide pour l'évaluation subjective par écoute.

569 (1977) Guide d'information pour essais subjectifs sur récepteurs de télévision.

597: — Antennes pour la réception de la radiodiffusion sonore et visuelle dans la gamme de fréquences comprises entre 30 MHz et 1 GHz.

597-1 (1977) Première partie: Propriétés électriques et mécaniques.

597-2 (1977) Deuxième partie: Méthodes de mesure des caractéristiques électriques.

657 (1979) Danger des rayonnements non ionisants dans la gamme de fréquences de 10 MHz à 300000 MHz.

728 (1982) Réseaux de distribution par câbles principalement destinés aux signaux de radiodiffusion sonore et de télévision et fonctionnant entre 30 MHz et 1 GHz.

IEC publications prepared by Technical Committee No.12 *(continued)*

487: — Methods of measurement for equipment used in terrestrial radio-relay systems.

487-1 (1974) Part 1: Measurements common to sub-systems and simulated radio-relay systems.

487-1A (1980) First supplement: Sub-clause 105.2: D.C. source conditions.

487-1-4 (1981) Part 1: Measurements common to sub-systems and simulated radio-relay systems. Section Four — Measurements in the baseband.

487-2: — Part 2: Measurements for sub-systems.

487-2-1 (1981) Section One — General.

487-2-2 (1981) Section Two — Stand-by channel switching equipment.

487-3 (1975) Part 3: Simulated systems.

487-3-2 (1981) Section Two — Measurements in the baseband.

487-3-3 (1981) Section Three — Measurements for monochrome and colour television transmission.

487-3-4 (1982) Section Four — Measurements for f.d.m. transmission.

487-3-5 (1982) Section Five — Measurement of mutual interference.

489: — Methods of measurement for radio equipment used in the mobile services.

489-1 (1983) Part 1: General definitions and standard conditions of measurement.

489-2 (1978) Part 2: Transmitters employing A3 or F3 emissions.

489-2A (1981) First supplement: Clauses 11 and 14.

489-3 (1979) Part 3: Receivers for A3 or F3 emissions.

489-3A (1981) First supplement: Clause 19.

489-4 (1980) Part 4: Transmitters employing single-sideband emissions (A3A, A3H or A3J).

489-5 (1979) Part 5: Receivers employing single-sideband techniques (A3A, A3H or A3J).

489-5A (1981) First supplement: Clause 17.

489-6 (1974) Part 6: Methods of measurement for signalling equipment.

489-6A (1976) First supplement: Selective calling equipment. Audio-frequencies commonly used in tone-signalling systems.

489-6B (1977) Selective calling equipment. Audio-frequency band measurements. Overall simulated systems.

489-7 (1976) Part 7: Privacy equipment. Supplementary definitions.

491 (1974) Safety requirements for electronic flash apparatus for photographic purposes.

510: — Methods of measurement for radio equipment used in satellite earth stations.

510-1 (1975) Part 1: General.

510-1A (1980) First supplement: Sub-clause 6.2: D.C. source conditions.

510-1-3 (1980) Part 1: Measurements common to sub-systems and combinations of sub-systems. Section Three: Measurements in the i.f. range.

510-2: —Part 2: Measurements for sub-systems.

510-2-1 (1978) Part 2: Section One — General. Section Two — Antenna (including feed network).

510-3: — Part 3: Methods of measurement for combinations of sub-systems.

510-3-1 (1981) Part 3: Section One — General.

510-3-2 (1980) Part 3: Section Two — Measurement of the figure of merit *(G/T)* of the receiving system in the 4 GHz to 6 GHz range.

543 (1976) Informative guide for subjective listening tests.

569 (1977) Informative guide for subjective tests on television receivers.

597: — Aerials for the reception of sound and television broadcasting in the frequency range 30 MHz to 1 GHz.

597-1 (1977) Part 1: Electrical and mechanical characteristics.

597-2 (1977) Part 2: Methods of measurement of electrical performance parameters.

657 (1979) Non-ionizing radiation hazards in the frequency range from 10 MHz to 300000 MHz.

728 (1982) Cabled distribution systems primarily intended for sound and television signals operating between 30 MHz and 1 GHz.

PRINTED IN SWITZERLAND

Publication 489-1 Computer typesetting and printing by Basler Druck- und Verlagsanstalt AG, Basle

Copyright International Electrotechnical Commission
Provided by IHS under license with IEC
No reproduction or networking permitted without license from IHS Not for Resale