INTERNATIONAL STANDARD

IEC 60436

Third edition
2004-02

Electric dishwashers for household use – Methods for measuring the performance



Reference number
IEC 60436:2004(E)

--`,,,-`-`,,`,,`,`,,`---

Copyright International Electrotechnical Commission
Provided by IHS under license with IEC
No reproduction or networking permitted without license from IHS

Not for Resale

Publication numbering

As from 1 January 1997 all IEC publications are issued with a designation in the 60000 series. For example, IEC 34-1 is now referred to as IEC 60034-1.

Consolidated editions

The IEC is now publishing consolidated versions of its publications. For example, edition numbers 1.0, 1.1 and 1.2 refer, respectively, to the base publication, the base publication incorporating amendment 1 and the base publication incorporating amendments 1 and 2.

Further information on IEC publications

The technical content of IEC publications is kept under constant review by the IEC, thus ensuring that the content reflects current technology. Information relating to this publication, including its validity, is available in the IEC Catalogue of publications (see below) in addition to new editions, amendments and corrigenda. Information on the subjects under consideration and work in progress undertaken by the technical committee which has prepared this publication, as well as the list of publications issued, is also available from the following:

- **IEC Web Site (www.iec.ch)**

- **Catalogue of IEC publications**

  The on-line catalogue on the IEC web site (www.iec.ch/searchpub) enables you to search by a variety of criteria including text searches, technical committees and date of publication. On-line information is also available on recently issued publications, withdrawn and replaced publications, as well as corrigenda.

- **IEC Just Published**

  This summary of recently issued publications (www.iec.ch/online_news/ justpub) is also available by email. Please contact the Customer Service Centre (see below) for further information.

- **Customer Service Centre**

  If you have any questions regarding this publication or need further assistance, please contact the Customer Service Centre:

  Email: custserv@iec.ch
  Tel: +41 22 919 02 11
  Fax: +41 22 919 03 00

Copyright International Electrotechnical Commission
Provided by IHS under license with IEC
No reproduction or networking permitted without license from IHS Not for Resale

INTERNATIONAL STANDARD

IEC 60436

Third edition
2004-02

Electric dishwashers for household use – Methods for measuring the performance

© IEC 2004 — Copyright - all rights reserved

No part of this publication may be reproduced or utilized in any form or by any means, electronic or mechanical, including photocopying and microfilm, without permission in writing from the publisher.

International Electrotechnical Commission, 3, rue de Varembé, PO Box 131, CH-1211 Geneva 20, Switzerland
Telephone: +41 22 919 02 11 Telefax: +41 22 919 03 00 E-mail: inmail@iec.ch Web: www.iec.ch

Commission Electrotechnique Internationale
International Electrotechnical Commission
Международная Электротехническая Комиссия

PRICE CODE XA

For price, see current catalogue

Copyright International Electrotechnical Commission
Provided by IHS under license with IEC
No reproduction or networking permitted without license from IHS

Not for Resale

CONTENTS

FOREWORD 4

1 Scope 7
2 Normative references 7
3 Terms and definitions 7
4 List of measurements 9
5 General conditions for measurements 9
5.1 General 9
5.2 Conditioning of the machine under test and sequence of test procedures 10
5.3 Electricity supply for machines 10
5.4 Test programme 11
5.5 Ambient conditions 11
5.6 Water supply 11
5.7 Detergent 12
5.8 Rinse agent 13
5.9 Salt 13
6 Cleaning performance 13
6.1 General and purpose 13
6.2 Load 13
6.3 Soiling agents 14
6.4 Preparation and application of soiling agents 14
6.5 Drying of the soiled dishes 21
6.6 Loading and operating 22
6.7 Evaluation 22
6.8 Expressing results 27
7 Drying performance 27
7.1 General and purpose 27
7.2 Load 27
7.3 Loading and operating 27
7.4 Evaluation 28
7.5 Expressing results 31
8 Energy consumption, water consumption and time 31
8.1 General and purpose 31
8.2 Method of measurement 31
9 Airborne acoustical noise 33

Annex A (normative) Place settings and serving pieces (non-AHAM style load) 34
Annex B (normative) AHAM style load 36
Annex C (informative) Illustration of soil distribution 39
Annex D (normative) Test materials for laboratories 40
Annex E (normative) Description of the reference machine 42
Annex F (informative) Addresses of suppliers 46
Annex G (normative) Microwave oven and through-circulation thermal cabinet 50

Copyright International Electrotechnical Commission
Provided by IHS under license with IEC
No reproduction or networking permitted without license from IHS Not for Resale

Annex H (informative) Guidelines for assessing cleaning performance 51
Annex I (normative) Test enclosure for built-in dishwasher 53
Annex J (informative) Flow chart – test sequence for IEC 60436 54
Annex K (normative) Shade chart 55
Annex L (informative) Test report format 56
Annex M (informative) Adjusting water consumption in the reference dishwasher 59

Bibliography 60

Figure 1 – Position of the glasses on the microwave turntable 16
Figure I.1 – Test enclosure for built-in dishwasher 53

Table 1 – Evaluation of Cleaning Tests 23
Table 2 – Evaluation to determine the cleaning index 24
Table 3 – Numerical Values of the *t*-factor for statistical calculations 26
Table 4 – Evaluation to determine the drying index 29

--`,,`-`-`,,`,,`,`,,`---

Copyright International Electrotechnical Commission
Provided by IHS under license with IEC
No reproduction or networking permitted without license from IHS Not for Resale

INTERNATIONAL ELECTROTECHNICAL COMMISSION

ELECTRIC DISHWASHERS FOR HOUSEHOLD USE – METHODS FOR MEASURING THE PERFORMANCE

FOREWORD

1) The International Electrotechnical Commission (IEC) is a worldwide organization for standardization comprising all national electrotechnical committees (IEC National Committees). The object of IEC is to promote international co-operation on all questions concerning standardization in the electrical and electronic fields. To this end and in addition to other activities, IEC publishes International Standards, Technical Specifications, Technical Reports, Publicly Available Specifications (PAS) and Guides (hereafter referred to as "IEC Publication(s)"). Their preparation is entrusted to technical committees; any IEC National Committee interested in the subject dealt with may participate in this preparatory work. International, governmental and non-governmental organizations liaising with the IEC also participate in this preparation. IEC collaborates closely with the International Organization for Standardization (ISO) in accordance with conditions determined by agreement between the two organizations.
2) The formal decisions or agreements of IEC on technical matters express, as nearly as possible, an international consensus of opinion on the relevant subjects since each technical committee has representation from all interested IEC National Committees.
3) IEC Publications have the form of recommendations for international use and are accepted by IEC National Committees in that sense. While all reasonable efforts are made to ensure that the technical content of IEC Publications is accurate, IEC cannot be held responsible for the way in which they are used or for any misinterpretation by any end user.
4) In order to promote international uniformity, IEC National Committees undertake to apply IEC Publications transparently to the maximum extent possible in their national and regional publications. Any divergence between any IEC Publication and the corresponding national or regional publication shall be clearly indicated in the latter.
5) IEC provides no marking procedure to indicate its approval and cannot be rendered responsible for any equipment declared to be in conformity with an IEC Publication.
6) All users should ensure that they have the latest edition of this publication.
7) No liability shall attach to IEC or its directors, employees, servants or agents including individual experts and members of its technical committees and IEC National Committees for any personal injury, property damage or other damage of any nature whatsoever, whether direct or indirect, or for costs (including legal fees) and expenses arising out of the publication, use of, or reliance upon, this IEC Publication or any other IEC Publications.
8) Attention is drawn to the Normative references cited in this publication. Use of the referenced publications is indispensable for the correct application of this publication.
9) Attention is drawn to the possibility that some of the elements of this IEC Publication may be the subject of patent rights. IEC shall not be held responsible for identifying any or all such patent rights.

International Standard IEC 60436 has been prepared by subcommittee 59A: Electric dishwashers, of IEC technical committee 59: Performance of household electrical appliances.

This third edition cancels and replaces the second edition published in 1981 and constitutes a technical revision. Major changes introduced in the second edition include

- changes made to the soils used in the standard;
- the use of an oven and microwave oven to dry the soils;
- the alternate 15 to 18 hour air dry method to dry the soils;
- the addition of a reference dishwasher;
- the recognition of alternate supply voltages and frequencies;
- the recognition of a cold or hot water supply to the dishwasher;
- the detergent and rinse aid compositions have been uprated to reflect current technology;
- the addition of the Aham load;
- the evaluation of the filter systems;

Copyright International Electrotechnical Commission
Provided by IHS under license with IEC
No reproduction or networking permitted without license from IHS Not for Resale

- the modification of the scoring system from 2 to 5 grades;
- the definition of program and cycle time;
- the temperature correction for energy testing;
- harmonization of ambient conditions.

The text of this standard is based on the following documents:

FDIS	Report on voting
59A/114A/FDIS	59A/116/RVD

Full information on the voting for the approval of this standard can be found in the report on voting indicated in the above table.

The committee has decided that the contents of this publication will remain unchanged until 2006. At this date, the publication will be either:

- reconfirmed;
- withdrawn;
- replaced by a revised edition, or
- amended.

Copyright International Electrotechnical Commission
Provided by IHS under license with IEC
No reproduction or networking permitted without license from IHS Not for Resale

INTRODUCTION

In 1996, IEC subcommittee 59A charged its Working Group 2 with the revision of the second edition of IEC 60436 to make it suitable for the international needs and to make it suitable for the current levels of dishwasher performance and technology.

The second edition was published in 1981 and has not been significantly updated.

SC59A instructed the WG2 to take the Cenelec draft standard EN 50242 as the basis for the third edition.

An important reason for the third edition was the need to take into account the needs of all countries such as varying voltages and frequencies, different water supply temperatures and water hardness and availability of specified soils in in the various countries.

To meet the goal the following significant technical changes were made.

- The repeatability and reproducibility of the test results have been improved by the introduction of the same model reference dishwasher specified for all locations.
- The soils have been changed to reflect the modern dishwasher's capability.
- The preparation of the soils has been improved to enhance repeatability and reproducibility by the introduction of new drying methods.
- The standard also recognizes various supply voltages and frequencies,cold or hot water supply, an alternate Aham load, the evaluation of dishwasher filter systems.
- The standard has updated the formulation of the detergent and rinse agents to reflect the producs on the market today.
- The standard has increased the sensitivity of the grading scale from two to five points to improve repeatability and reproducibility.
- Ambient conditions have been brought closer to harmonization.
- More detailed instructions have been provided for the installation of the various designs of dishwashers.
- Correction formulae have been provided for the correction of energy consumption measurements for varying water supply temperature.

--`,,`,-`-`,,`,,`,`,,`---

Copyright International Electrotechnical Commission
Provided by IHS under license with IEC
No reproduction or networking permitted without license from IHS Not for Resale

ELECTRIC DISHWASHERS FOR HOUSEHOLD USE – METHODS FOR MEASURING THE PERFORMANCE

1 Scope

This international standard applies to electric dishwashers for household use that are supplied with hot and/or cold water.

The object is to state and define the principal performance characteristics of electric dishwashers for household use and to describe the standard methods of measuring these characteristics.

This standard is concerned neither with safety nor with performance requirements.

2 Normative references

The following referenced documents are indispensable for the application of this document. For dated references, only the edition cited applies. For undated references, the latest edition of the referenced document (including any amendments) applies.

IEC 60350, *Electric cooking ranges, hobs, ovens and grills for household use – Methods for measuring performance*

IEC 60704-2-3, *Household and similar electrical appliances – Test code for the determination of airborne acoustical noise – Part 2-3: Particular requirements for dishwashers*

IEC 60704-3, *Test code for the determination of airborne acoustical noise emitted by household and similar electrical appliances – Part 3: Procedure for determining and verifying declared noise emission values*

IEC 60705, *Household microwave ovens – Methods for measuring performance*

IEC 60734, *Household electrical appliances – Performance – Hard water for testing*

ISO 607, *Surface active agents and detergents – Methods of sample division*

AHAM DW-1:2003: *Performance testing methods for household electric dishwashers*

3 Terms and definitions

For the purposes of this document, the following terms and definitions apply.

3.1
dishwasher
machine which cleans, rinses, and dries dishware, glassware, cutlery, and, in some cases, cooking utensils by chemical, mechanical, thermal, and electric means. A dishwasher may or may not have a specific drying operation at the end of the program

Copyright International Electrotechnical Commission
Provided by IHS under license with IEC
No reproduction or networking permitted without license from IHS Not for Resale

3.2
rated dishwasher capacity
whole number of place settings together with the serving pieces (see Annexes A & B) stated by the manufacturer, which can be cleaned and dried when loaded in accordance with the manufacturer's instructions

3.3
operation
each event that occurs during the dishwasher programme such as cleaning, rinsing or drying

3.4
programme
series of operations which are pre-defined within the dishwasher and which are declared as suitable for specified levels of soil and/or type of load and together form a complete cycle

3.5
cycle
complete washing, rinsing, and drying process, as defined by the programme selected, consisting of a series of operations

3.6
programme time
programme time is measured from the initiation of the programme (excluding any user programmed delay) until an end of programme indicator. If there is no end of programme indicator, the programme time is equal to the cycle time

3.7
cycle time
cycle time is measured from the initiation of the programme (excluding any user programmed delay) until all activity ceases (i.e. the end of the cycle)

3.8
automatic dispenser
device activated automatically which injects or dispenses detergent, rinse agent, etc., one or more times into the dishwasher at predetermined points in the dishwasher cycle

3.9
non-automatic dispenser
device, usually a fixed cup or cavity on the dishwasher door, cover, or dish rack, which deposits a previously measured amount of detergent, rinse agent, etc., into the dishwasher at the beginning of the dishwasher cycle

3.10
water softener
device which reduces the hardness of water

3.11
rack
support for holding dishware, cutlery, and/or glassware in the dishwasher

3.12
detergent
cleaning agent in powder, granular, tablet or liquid form, manufactured for use in household electric dishwashers to aid in the removal of food soils by chemical means

NOTE A reference detergent in powder form is specified for use in this standard (see 5.7).

--`,,,-`-`,,`,,`,`,,`---

Copyright International Electrotechnical Commission
Provided by IHS under license with IEC
No reproduction or networking permitted without license from IHS Not for Resale

3.13
rinse agent
chemical agent added to the water in the last rinsing operation to improve the drying effect and reduce water marks

NOTE Two reference rinse agents are specified for use in this standard (see 5.8).

3.14
serving pieces
defined set of crockery and cutlery for serving (see Annexes A and B)

3.15
place settings
defined set of crockery, glass and cutlery for use by one person(see Annexes A and B)

4 List of measurements

Standard methods of measuring the performance characteristics are determined as follows:

– cleaning performance according to Clause 6;
– drying performance according to Clause 7;
– energy, water consumption and time according to Clause 8;
– airborne acoustical noise according to Clause 9.

5 General conditions for measurements

5.1 General

The dishwasher manufacturer's instructions regarding installation and use of the dishwasher shall be followed, except where there is a conflict, in which case this standard shall prevail**.**

Performance tests according to this standard shall be generally carried out on a new machine, with a reference machine running parallel with the machine(s) under test, i.e., at the same time under the same conditions using soil prepared at the same time from the same batch. The reference machine shall be in accordance with the description given in Annex E.

The reference machine shall always be installed as a free standing machine independent of the type of machine under test.

Before commencing measurements, the dishwasher and the reference machine shall be checked to ensure that they are operating properly.

All tests shall be started with the appliances at the ambient temperature according to 5.5.

5.1.1 Free standing dishwashers

Dishwashers shall be tested as free standing except where they are designated as built–in or integrated (refer to 5.1.2). Dishwashers that can be installed as either free standing or built-in/integrated shall be tested as free standing.

5.1.2 Built in and integrated dishwashers

Built-in dishwashers have to be installed in an enclosure. See Figure I.1.

Copyright International Electrotechnical Commission
Provided by IHS under license with IEC
No reproduction or networking permitted without license from IHS Not for Resale

The front edge of the housing of the dishwasher (except the door) shall be 20 mm to 25 mm behind the front edge of the test enclosure. If required by the manufacturer's instructions, the enclosure shall be provided with ventilation openings accordingly.

If an appliance is provided with spacers, strips or other special means of solid or resilient material for closing the gap(s) between the contours of the appliance and the cabinet enclosure, these means shall be used accordingly. If such means are not provided, the gap(s) shall be left open.

Appliances to be integrated shall be installed under the same conditions as built-in appliances. In addition, the door of the dishwasher shall be equipped, in accordance with the manufacturer's instruction, with a board of the maximum size allowed by the manufacturer and of the same material and thickness as the test enclosure; see Annex I.

Moreover, for integrated types, the test enclosure shall be provided, in accordance with the manufacturer's instructions, at its lower front side with a skirting board of the maximum height which corresponds with the size of the board on the door of the appliance and of the same material and thickness as the test enclosure, see Annex I. If no instructions are given by the manufacturer, a skirting board as described above shall be pressed against the skirting board of the appliance.

5.2 Conditioning of the machine under test and sequence of test procedures

Before conducting the performance tests, the dishwasher shall be operated for at least 3 complete cycles using a clean load with reference detergent (specified in 5.7) and without rinse agent. The following cycle(s) can be a noise test according to Clause 9. No additional cycles shall be carried out on the machine under test between the sequential steps specified in the following procedure.

The tests shall be performed in the following order: cleaning performance (Clause 6) then drying performance (Clause 7). The determination of energy, water and cycle/program time (Clause 8) shall be done in conjunction with a wash performance test (Clause 6).

NOTE 1 The above sequence is necessary for better reproducibility, i.e. to avoid differences in drying performance due to the ageing process of the plastic parts in the dishwasher (for example, racks).

NOTE 2 Any cycles or operations performed on the appliance during the manufacture of the product are ignored.

NOTE 3 Noise tests require that the test should be carried out before the rinse aid dispenser is filled for the first time.

5.3 Electricity supply for machines

5.3.1 Electricity supply for test machine

5.3.1.1 Voltage

The test voltage shall be set at the rated voltage of the machine and maintained within the range of ±2 % throughout the test. If a voltage range is indicated, then the test voltage shall be set at the nominal voltage of the country in which the appliance is intended to be used. The measured voltage shall be reported.

NOTE If the rated voltage of the machine differs from the system voltage of the country of intended use, measurements should be carried out at the nominal voltage of the country of intended use.

5.3.1.2 Frequency

The supply frequency shall be set at the rated frequency of the machine and maintained within the range ±1 % throughout the test. If a frequency range is indicated, then the testing shall be carried out at the nominal frequency of the country in which the appliance is intended to be used. The measured frequency shall be reported.

Copyright International Electrotechnical Commission
Provided by IHS under license with IEC
No reproduction or networking permitted without license from IHS Not for Resale

NOTE If the rated frequency of the machine differs from the system frequency of the country of intended use, measurements should be carried out at the nominal frequency of the country of intended use.

5.3.2 Electricity supply for the reference machine

5.3.2.1 Voltage

The supply voltage shall be set at 230 V a.c. and maintained within ±2 % throughout the test. The measured voltage shall be reported.

5.3.2.2 Frequency

The supply frequency shall be set at 50 Hz and maintained within ±1 % throughout the test. The measured frequency shall be reported.

5.4 Test programme

The first programme to be tested shall be the one recommended by the manufacturer for a normally soiled load.

NOTE In some countries the manufacturer has to declare the programme to be used, for the purpose of energy labelling (which may not be for a normally soiled load), in which case this programme shall be the one tested first.

The same programme shall be used for measuring the cleaning performance according to Clause 6, the drying performance according to Clause 7, the energy and water consumption and time according to Clause 8, and the noise according to Clause 9, if tested.

Additional programmes may then be tested.

5.5 Ambient conditions

The following ambient conditions shall be maintained throughout the measurements.

Oven drying method

– Ambient temperature of the room: (20 ± 2) °C
– Relative humidity: (55 ± 10) % RH

Air dry method

– Ambient temperature of the room: (20 ± 2) °C
– Relative humidity: (65 ± 10) % RH

The ambient temperature and the relative humidity measured during the tests shall be reported in the test report.

5.6 Water supply

5.6.1 General

The actual water conditions (temperature, hardness, and pressure) maintained during the tests shall be reported in the test report.

NOTE Some countries specify a hot water temperature for regulatory purposes, in which case this water temperature should be used for testing.

5.6.2 Water supply – Temperature

The temperature of the supply water shall be

– cold water feed temperature:

Copyright International Electrotechnical Commission
Provided by IHS under license with IEC
No reproduction or networking permitted without license from IHS Not for Resale

- (15 ± 2) °C.

– hot water feed temperature:
  - temperature indicated by the manufacturer ±2 °C, or
  - where a range is specified which does include 60 °C, (60 ± 2) °C, or
  - where a range is specified which does not include 60 °C, the value nearest to 60 °C ± 2 °C, or
  - (60 ± 2) °C, if instructions are not given.

5.6.3 Hardness

A water hardness of (2,5 ± 0,5) mmol/l for hard water areas or ≤0,7 mmol/l for soft water areas shall be used. If water hardness needs to be adjusted to meet these specifications, it shall be prepared according to IEC 60734 – Method C. The measured water hardness shall be reported. The water hardness used in the test shall be the one most applicable to the country of intended use.

NOTE The impact of water hardness variation between 0,0 mmol/l to 0,7 mmol/l is still under investigation.

5.6.4 Water pressure

The pressure of the water supply at each water inlet shall be set at 240 kPa and shall be maintained within the range ±20 kPa, including during all fills. The measured water pressure shall be reported. Where the manufacturer specifies a range of water pressure that does not include 240 kPa ± 20 kPa, the water pressure shall be set at the end of the pressure range closest to 240 kPa ± 20 kPa.

5.7 Detergent

The reference detergent C, as described in Annex D, shall be used in the reference machine and test machine(s) when measuring performance. The quantity shall be as recommended by the manufacturer. But shall not be more than

– 15,0 g + 1,25 g per place setting.

If no recommendation is given by the manufacturer, use

– 12,0 g + 1,0 g per place setting

For dishwashers not equipped with a water softener and being tested with hard water (see 5.6.3), follow the manufacturer's recommendation, but the quantity shall not exceed 15,0 g + 1,25 g per place setting, in both the pre-wash and the main wash. If no recommendation is given by the manufacturer, use 12,0 g + 1,0 g per place setting, in both the pre-wash and the main wash. The quantity of detergent used in g/place setting during the tests shall be recorded.

The detergent shall be placed in the dishwasher immediately prior to starting the programme. If a dispenser is incorporated in the dishwasher it shall be used. The dispenser shall be clean and dry prior to the placement of detergent. In the absence of manufacturer's recommendations, the detergent shall be placed in the main compartment of the dispenser.

Detergent from the same batch shall be used for the dishwasher under test and for the reference dishwasher.

Before use the detergent shall be homogenized in accordance with ISO 607 (refer to Annex F for suitable equipment).

Copyright International Electrotechnical Commission
Provided by IHS under license with IEC
No reproduction or networking permitted without license from IHS Not for Resale

5.8 Rinse agent

The rinse agent as described in Annex D shall be used. For a water hardness of 2,5 mmol/l, Formula III rinse aid (acidic) shall be used. For a water hardness of ≤0,7 mmol/l, Formula IV (neutral) rinse aid shall be used.

NOTE 1 As a guide, acidic rinse agent is to be used with hard water and neutral rinse agent with soft water. However, where one type of rinse aid is not generally available in the country of intended use, the other may be specified regardless of the water hardness. In dishwashers with softeners in hardwater areas, the hardness in the final rinse will be below 0,7 mmol/l.

For dishwashers with an adjustable automatic dispenser, the setting shall be as recommended by the manufacturer. In the absence of such an indication, the setting shall be used which gives the lowest quantity of rinse aid.

NOTE 2 Any recommendation by the manufacturer to the user to manually adjust the initial setting, based on experience, is disregarded.

For machines without automatic dispensers, the rinse agent shall be added manually, if so recommended by the manufacturer and in accordance with their instructions.

5.9 Salt

If the dishwasher is equipped with a water softener that requires salt, fill in accordance with the manufacturer's instructions for the water hardness used for the test. For specification of the salt, see Annex D.

6 Cleaning performance

6.1 General and purpose

The purpose of this test is to measure how well the appliance cleans normally soiled place settings and serving pieces.

The tests are carried out in parallel with the reference machine specified in Annex E. Soiling of the test loads for the test machine(s) and the reference machine shall be prepared in parallel.

The reference machine shall also be run in parallel with any test machine(s). For a large number of test loads, it may be necessary to have more than one person preparing soils, but one person shall prepare each soil type for all loads. Similarly, one person shall apply each soil type for all loads (person preparing soils may be different than the person applying soils).

Detergent and rinse agents are used according to 5.7 and 5.8.

The sequence of the test procedure as specified in 5.2 shall be followed.

NOTE If only a cleaning evaluation is to be undertaken, the evaluation may be commenced as soon as the dishwasher indicates the end of the programme and the evaluator can safely handle the load.

6.2 Load

The test load shall consist of the whole number of complete place settings plus the corresponding serving pieces (see Annex A or B) which together comprise the manufacturer's rated capacity.

NOTE The reference machine always uses a load style from Annex A, irrespective of the load style used on the test machine.

All items shall be thoroughly clean and dry so that they could achieve a score of 5 before soiling. Any evaluation shall be done in accordance with 6.7. If a load item needs to be

--`,,,-`-`,,`,,`,`,,`---
Copyright International Electrotechnical Commission
Provided by IHS under license with IEC
No reproduction or networking permitted without license from IHS Not for Resale

cleaned or reconditioned, items can be washed by hand or washed in a dishwasher but all reconditioned items shall be washed in a dishwasher that dispenses IEC rinse aid (refer to Annex D) in the final operation prior to the next test.

NOTE Reconditioning in a dishwasher should be done using detergent B or C (refer to Annex D).

Any items with imperfections likely to affect the evaluation or with chips or cracks shall be removed and replaced.

6.3 Soiling agents

The following soiling agents are required:

– milk;
– tea;
– minced meat;
– egg;
– oat flakes;
– spinach;
– margarine.

All food products, at the time they are used for the preparation of soiling agents to this standard, shall be within the “use-by” date or before their expiry date stated on the product. The remains of newly opened packets of tea and oat flakes may be used for subsequent tests for a period of up to 60 d after opening, if the contents are stored in a sealed container. Specific directions are provided in the following section for storage and re-use of spinach after defrosting.

If the specified product is not available, the use of a similar product which provides equivalent results is permitted. Equivalency shall be proven through testing.

6.4 Preparation and application of soiling agents

Unless specifically stated otherwise, all soiling agents are to be freshly prepared for each test.

The whole amount of each soiling agent needed for the test (grams/setting × number of settings) shall be weighed out, divided into portions as necessary and applied as specified to the parts of the setting.

It is then recommended to start by pre-heating the microwave oven for the milk soiling. During this time prepare the tea soiling. During the pre-drying period for the tea (one hour) prepare and apply the rest of the soiling agents.

NOTE Refer to Annex C for an illustration of soiling distribution and quantities.

6.4.1 Milk

6.4.1.1 Items required for preparation

– Any U.H.T. milk with 1,5 % – 2 % fat content may be used. U.H.T. milk shall have a “use-by” date, or expiry date, of at least 1,5 months from the date of the test. Fresh 2 % fat content homogenized milk may be used within its expiry date and shall be kept refrigerated. U.H.T. milk shall be refrigerated after opening and shall be used within 2 days of opening.
– Microwave oven with a glass turntable as specified in Annex G.
– Laboratory glasses without drain (250 ml capacity – See Annex A or B) with the following dimensions:

Copyright International Electrotechnical Commission
Provided by IHS under license with IEC
No reproduction or networking permitted without license from IHS Not for Resale

- height: 115 cm
- diameter: 60 cm

– Pipette (10 ml)

6.4.1.2 Conversion

If the power level of the microwave oven to be used is not equal to the specified rated values (780 W and 150 W) according to Annex G but within the given tolerances, the pre-heating and cooking times shall be corrected as follows:

$$T_u = \frac{P_d \times T_d}{P_u}$$

where

P_d is the power level, determined ;

T_d is the cooking time, determined (in seconds);

P_u is the power level, used (measured according to IEC 60705);

T_u is the cooking time to use (in seconds).

Use levels which are as close to the specified power levels (wattage) as possible.

6.4.1.3 Pre-heating the microwave oven

Before cooking the milk in the glasses, heat up the microwave oven as follows:

– Place six glasses each filled with 50 ml of water, in the microwave oven;

– Place the glasses symmetrically in a circle with a radius of 9,5 cm – 10 cm (centre of the circle = centre of the glass turntable). See Figure 1.

– Operate the microwave oven for 4 min at a power level of 780 W and then for 10 min at a power level of 150 W, or at the corrected cooking times calculated above for the power level used.

After pre-cooking, take the water-filled glasses out of the microwave oven.

6.4.1.4 Application

Upon removal from the refrigerator, shake the milk well for approximately 30 s before each application. Immediately after the shaking, pour 10 ml into each glass using a pipette and immediately carry out the cooking process. Use one glass for each place setting.

Any remaining milk shall be put back into the refrigerator, without delay.

6.4.1.5 Cooking process

Immediately after the pre-heating has been completed, place 6 glasses with milk (10 ml/glass) in the microwave oven and cook the glasses continuously under the same conditions, i.e., for 4 min at 780 W and 10 min at 150 W, or at the corrected conditions.

During each cooking operation there shall always be 6 glasses, with milk, in the microwave oven. The glasses shall be placed on the turntable as shown in Figure 1 and the base of beaker shall remain flat on the turntable.

NOTE If more than 6 glasses are required for testing, an additional 6 may be cooked immediately after the first set of 6 glasses, without repeating the pre-heating process.

Copyright International Electrotechnical Commission
Provided by IHS under license with IEC
No reproduction or networking permitted without license from IHS Not for Resale

After the cooking period in the microwave oven, the colour of the cooked milk shall be compared with the colour chart in Annex K. The colour at the bottom of the glass shall be at least colour No. 4 on the colour chart and not exceed colour No. 6.

Small areas of the milk skin shall not be darker than 12 on the colour chart.

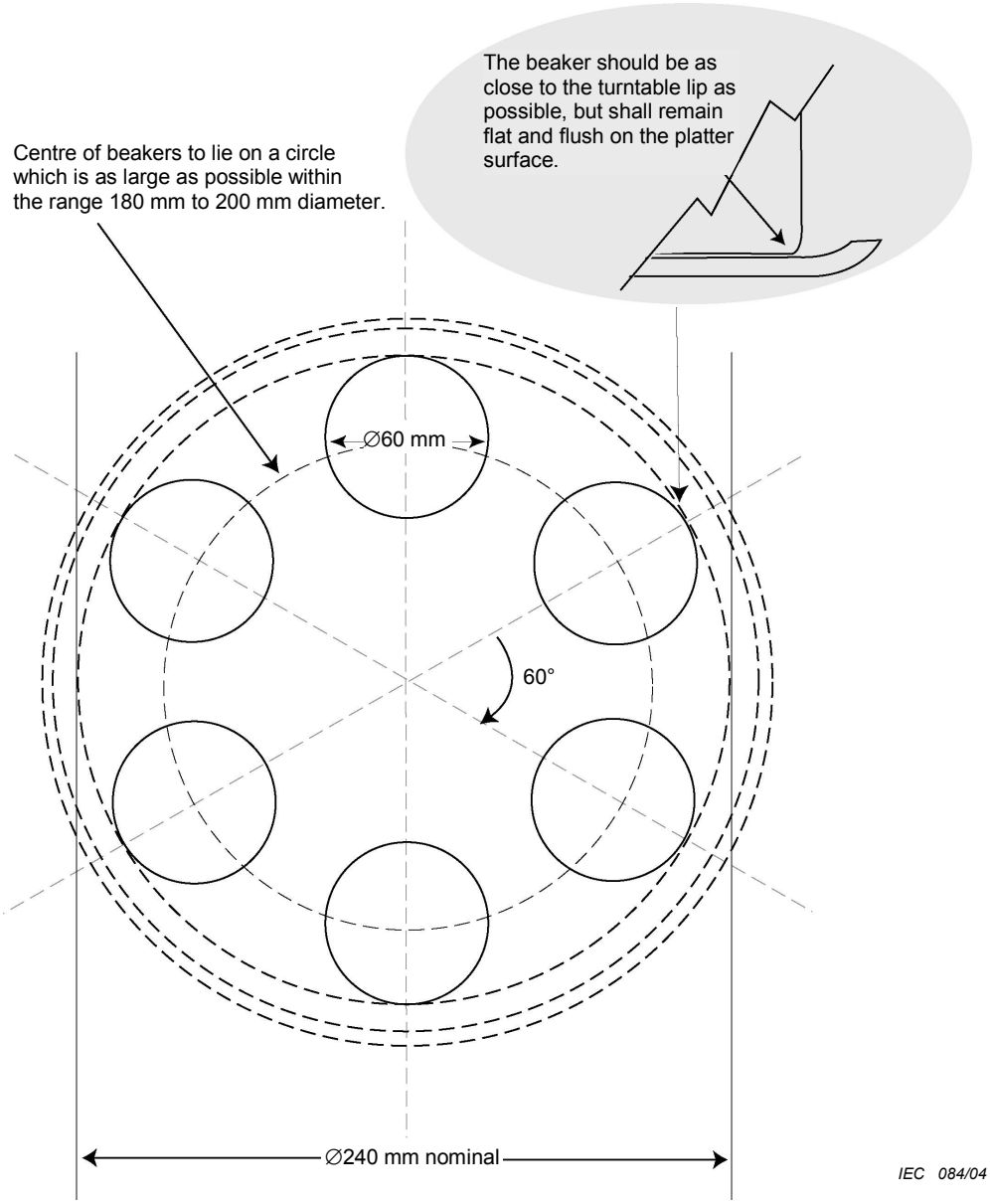

Figure 1 – Position of the glasses on the microwave turntable

6.4.2 Tea

Use tea with the following characteristics:

- tea type: black
- tea quality: ceylon
- leaf quality: orange pekoe
- leaf size: broken

Copyright International Electrotechnical Commission
Provided by IHS under license with IEC
No reproduction or networking permitted without license from IHS Not for Resale

The tea recommended in Annex F meets these requirements.

6.4.2.1 Preparation

Pour 1 litre of boiling water over 6 g of tea and allow to stand in a covered container, for a period of 5 min. Afterwards, pour the tea through a sieve (mesh aperture 1 mm) into a second container. Ensure that the total hardness of the water used for making the tea is between 2,0 mmol/l and 3,0 mmol/l.

NOTE Tap water, mineral water or water prepared in accordance with 5.6.3 that meets the above specification may be used.

6.4.2.2 Pre-drying for oven drying method

Half-fill the cups and saucers with tea, ensuring an even distribution over cups and saucers respectively. Place the cups and saucers in a preheated to 80 °C thermal cabinet (see Annex G) as quickly as possible, and leave to dry for a period of 1 h. Ensure that the dishes are not placed too closely together. Remove the items from the thermal cabinet and empty out any remaining tea, and discard.

6.4.2.3 Pre-drying for air drying method

Half fill the cups and saucers with tea, and allow to pre-dry at ambient conditions for one hour. Carefully decant the excess tea from the cup and saucer so that approximately 20-30 ml of tea are remaining in both the cup and the saucer, retaining as many particles as possible. The decanted tea is discarded.

6.4.3 Minced meat

Prepare a sufficiently large amount of minced beef, to ensure a homogeneous mix. Remove all fat and sinew from the meat before mincing. Use an electric meat grinder, with a perforated disc, with 4,5 mm diameter holes (approximately 50). Choose a setting where the amount of minced meat production is approximately 700 g per min (r/min approx. 150).

6.4.3.1 Preparation and Storage

Mix 50 g whisked whole egg(see 6.4.4 for specification) to every 150 g minced meat, mix well, divide into 60 g portions. Wrap in aluminium foil, or place in closed containers, or place in sealed plastic bags and freeze. Before use, allow the meat to defrost to ambient conditions and mix with water at a ratio of 30 g minced meat to 8 g water, until homogeneous.

6.4.3.2 Application

- Items to be soiled

Half of the dinner plates and the large (20 cm) serving bowl (7 or more place settings only)

- Quantity of soil

1,5 g per place setting for the plates and 4 g for the serving bowl.

- Method of soiling

Use a fork. Based on the number of place settings, calculate the total weight of soil that will be needed. Place an amount of minced meat, slightly more than required, in a container along with the fork. Weigh the container, minced meat and fork. Apply the soil to the load items, with the fork, until the required soil amount has been applied, i.e., the weight of the container, plus minced meat, plus fork, has been reduced by the amount required for the load. Soils shall be evenly distributed. Soil can be added or removed to ensure the exact amount.

Copyright International Electrotechnical Commission
Provided by IHS under license with IEC
No reproduction or networking permitted without license from IHS Not for Resale

– Dinner plates

The minced meat soil is applied evenly to the upper surface of each plate, ensuring that a space of 20 mm around the edge is left clean. In the case of an uneven number of place settings, only apply minced meat to half of the surface of the last odd numbered plate (the other half is used for the egg).

– Large serving bowl

The minced meat soil is applied to the bottom and inner sides, ensuring that a space of 20 mm around the edge is left clean.

6.4.4 Egg

Use good quality hen's eggs weighing 50 g to 65 g each, at room temperature. Eggs should be at least 7 days old but not past their "use–by", or expiry date. Eggs shall be stored in the refrigerator until required. Eggs shall be at ambient conditions prior to use.

NOTE Tests have shown that very fresh eggs change in their consistency over the first few days after laying: a minimum of 7 days after laying ensures stability.

6.4.4.1 Preparation

Use at least three eggs and separate the egg white from the egg yolk. Mix egg yolks with a fork in a bowl. Remove the yolk sack.

6.4.4.2 Application

- Items to be soiled

Half of the total number of dinner plates, half of the total number of dessert plates, all the forks.

- Quantity of soil:

2 g of egg per place setting is used to soil crockery and cutlery.

- Method of soiling:

Use a pastry brush with a width of approximately 25 mm. Based on the number of place settings, calculate the total weight of soil that will be needed. Place an amount of egg, slightly more than required, in a container along with the brush. Weigh the container, egg and brush. Apply the soil to the load items, with the brush, until the required soil amount has been applied, i.e., the weight of the container, plus egg, plus brush has been reduced by the amount required for the load. Soils shall be evenly distributed. Soil can be added or removed to ensure the exact amount.

First soil the forks.

– Forks:

Apply a thin, even layer of egg soil to both sides of the head of each fork from the total quantity of soil. Place the forks on a separate plate, prong down. Allow to dry in this position.

Then soil the dinner and dessert plates.

Copyright International Electrotechnical Commission
Provided by IHS under license with IEC
No reproduction or networking permitted without license from IHS Not for Resale

– Dinner plate:

The egg soil is applied evenly to the upper surface of each plate, ensuring that a space of 20 mm around the edge is left clean. In the case of an uneven number of place setting, only apply egg to half of the surface of the last odd numbered plate (the other half is used for the minced meat).

– Dessert plates:

The egg soil is applied evenly to the upper surface of each plate ensuring that a space of 20 mm around the edge is left clean. In the case of an uneven number of place settings, only apply egg to half of the surface of the last odd numbered plate (the other half is used for the spinach).

6.4.5 Oat flakes

Use uncooked small oat flakes.

The oat flakes recommended in Annex F meet this requirement.

6.4.5.1 Preparation

Add 50 g of thoroughly mixed oat flakes with 750 ml cold water according to 5.6.3 and 250 ml milk (see 6.4.1 for specification). Make porridge by bringing the mixture to the boiling point and allow to simmer for 10 min, stirring continuously using a wooden spoon.

6.4.5.2 Application

Items to be soiled: All of the soup plates and all of the soup spoons.

- Quantity of soil:

Soup spoons are dipped in the prepared soil.

3 g of porridge per place setting, for the soup plates.

- Method of soiling:

– Soup spoons:

Dip the bowl part of the soup spoons into the freshly made porridge and place on an extra plate, not belonging to the test load, with the back of the spoon bowl facing upwards. Allow to dry in this position.

– Soup plates:

Use a pastry brush with a width of approximately 25 mm. Based on the number of place settings, calculate the total weight of soil that will be needed. Place an amount of porridge, slightly more than required, in a container along with the brush. Weigh the container, porridge and brush. Apply the soil to the load items, with the brush, until the required soil amount has been applied, i.e., the weight of the container, plus porridge, plus brush, has been reduced by the amount required for the load. Soils shall be evenly distributed. Soil can be added or removed to ensure the exact amount.

– Soup plate:

The porridge soil is applied evenly to the upper surface of each plate, ensuring that a space of 20 mm around the edge is left clean.

Copyright International Electrotechnical Commission
Provided by IHS under license with IEC
No reproduction or networking permitted without license from IHS Not for Resale

6.4.6 Spinach

Use frozen young spinach, finely minced and with no other additives or ingredients.

The spinach recommended in Annex F meets these requirements.

6.4.6.1 Preparation and storage

Allow the spinach to defrost at ambient temperature. Afterwards, place the spinach in a sieve with a mesh size of 2 mm and allow to drip for about 5 min. Pass the spinach completely through a grinder (use same grinder described in 6.4.3) having a perforated disc with 180 holes with 2 mm diameter. Choose a setting where the amount of minced spinach production is approximately 170 g per minute, the no-load speed for the grinder is approximately 160 r/min. Divide the spinach into convenient portions and keep it in containers with the lid closed in the refrigerator until use. Ensure that the prepared spinach is not kept in the refrigerator for more than three days. Stir the spinach before use.

6.4.6.2 Application

- Items to be soiled

Half of the dessert plates and the small and medium serving bowls (refer to Clause B.4 for equivalent items for the AHAM style load).

- Quantity of soil

3 g per place setting.

- Method of soiling

Use a pastry brush with a width approximately 25 mm. Based on the number of place settings, calculate the total weight of soil that will be needed. Place an amount of spinach, slightly more than required, in a container along with the brush. Weigh the container, spinach and brush. Apply the soil to the load items, with the brush, until the required soil amount has been applied, i.e., the weight of the container, plus spinach, plus brush, has been reduced by the amount required for the load. Soils shall be evenly distributed. Soil can be added or removed to ensure the exact amount.

– Dessert plates:

  The spinach soil is applied evenly to the upper surface of each plate, ensuring that a space of 20 mm around the edge is left clean. In the case of an uneven number of place settings, only apply spinach to half of the surface of the last odd numbered plate (the other half is used for the egg).

– The small and medium serving bowls:

  The spinach is applied to the bottom and inner sides, ensuring that a space of 20 mm around the edge is left clean.

6.4.7 Margarine

Household margarine with a total fat content of 75 % to 85 % which also meets the following requirements:

	containing
saturated fat	(33 ± 10) %
polyunsaturated	(33 ± 10) %
monounsaturated	(33 ± 10) %

Copyright International Electrotechnical Commission
Provided by IHS under license with IEC
No reproduction or networking permitted without license from IHS Not for Resale

6.4.7.1 Preparation and storage

Keep margarine refrigerated until use.

6.4.7.2 Application

- Items to be soiled:

Oval platter.

- Quantity of soil:

1 g per place setting.

- Method of soiling:

For the distribution of margarine, use a scraper. Based on the number of place settings, calculate the total weight of soil that will be needed. Place an amount of margarine, slightly more than required, in a container along with the scraper. Weigh the container, margarine and scraper. Apply the soil to the oval platter, with the scraper, until the required soil amount has been applied, i.e., the weight of the container, plus margarine, plus scraper, has been reduced by the amount required for the load. Leave a 20 mm clean edge all around. Soils shall be evenly distributed. Soil can be added or removed to ensure the exact amount.

6.5 Drying of the soiled dishes

6.5.1 Oven dry method

After the pre-drying period for tea according to 6.4.2, arrange all the soiled dishes including the soiled cutlery, cups and saucers with the tea soiling in the thermal cabinet as fast as possible; ensure that the dishes are not placed too closely together. They shall remain in a thermal cabinet (see Annex G) for a period of two hours after the doors are closed. Do not place the glasses with the milk soiling (see 6.4.1) or the oval platter with margarine (see 6.4.7) or the clean cutlery in the thermal cabinet.

After oven drying, the load shall be allowed to cool to an ambient temperature of 20 °C ± 2 °C before testing. The load shall be removed from the thermal cabinet to cool down.

6.5.2 Air dry method

All load items shall be dried in a conditioned room according to 5.5. After the pre-drying period according to 6.4.2, the cups and saucers shall be placed on a level surface in their serving orientation to dry. After soiling, all other load items shall be left to dry in their serving orientation to allow the soils to set; generally one hour is sufficient. The total dry time shall be 15 h to 18 h and shall be in accordance with one of the options below. After the initial drying to allow the soils to set, the load, excluding the cups and saucers, shall be:

a) loaded into the dishwasher racks with the racks still in the dishwasher – in this case, the dishwasher door shall be open and the racks pulled out; or

b) loaded into the dishwasher racks which have been placed on a bench – in this case, a tray shall be placed under the racks and any soil that falls into the tray shall be placed on the dishwasher door before the wash programme is commenced; or

c) left on a level surface – in this case, care is necessary to ensure that any loose soil particles fall into the dishwasher during loading.

NOTE Methods to reduce the soil drying period from 15 h to several hours are under consideration.

Copyright International Electrotechnical Commission
Provided by IHS under license with IEC
No reproduction or networking permitted without license from IHS Not for Resale

6.6 Loading and operating

6.6.1 Loading

Load the dishwasher in accordance with the manufacturer's instructions without stacking the dishware or nesting the cutlery. Place the following unsoiled items in the dishwasher, making sure that each item is clean:

– knives;
– teaspoons;
– dessert spoons;
– serving cutlery.

The soiled crockery and cutlery is to be arranged in the dish racks inside the dishwasher after drying, but care has to be taken that the soiled dishes are evenly distributed in the dishwasher as much as possible. For the air drying method only, any tea remaining in the cups or saucers is put into the dishwasher just before the start of the test cycle. Any soil particles that fall from load items during loading of the dishwasher shall be collected and placed on the dishwasher door prior to starting the program.

The reference dishwasher shall be loaded in accordance with Clause E.3.

6.6.2 Operating

During the performance tests, the machine(s) under test have to run parallel with the reference machine. Before the machine(s) start(s), place the detergent according to 5.7.

Perform at least 5 cleaning test cycles of the test programme without cleaning the dishwasher filters between the measurements. If necessary, increase the number of cleaning test cycles until the condition $\ln W_C < 0{,}073$ described in 6.7.2 is fulfilled, to a maximum of 8 cleaning test cycles.

NOTE $\ln W_C$ refers to the natural log to base e of W_C.

Between two successive cycles in a series, in order to determine a value for $\ln W_C$, machines shall be allowed to cool down until they meet the requirements of 5.5. The maximum time between successive test cycles, used to determine a value in $\ln W_C$ shall not exceed 4 days. Soiled dishes that have been prepared by the oven dry method may be stored for a maximum of 4 days when covered by an opaque plastic cover sheet.

6.7 Evaluation

6.7.1 Assessing the cleaning

Inspect each item for possible soil traces or remains; check both the inner and the outer sides in diffused light using lighting with a colour temperature of 3 500 K – 4 500 K.

The lighting shall be installed where the evaluation takes place in order to avoid any direct glare. The luminance measured at the position of evaluation shall be 1 000 lux – 1 500 lux.

Inspection is to be carried out by competent and trained testing personnel. Inspection of the items in the machine under test and the reference machine shall be carried out by the same person. Evaluation of each item shall not take longer than 10 s, excluding handling (for example, taking out, putting aside) or confirming the nature of a mark or irregularity.

NOTE For information about measurement and evaluation of artificial lighting, see the Bibliography.

To evaluate soil remaining, consult Table 1. Any soil residue on the unglazed edges of china is not taken into consideration.

Copyright International Electrotechnical Commission
Provided by IHS under license with IEC
No reproduction or networking permitted without license from IHS Not for Resale

Each load item shall be assessed and the score noted individually. The type of soil and total number of relevant items shall also be noted according to Table 2.

Table 1 – Evaluation of cleaning Tests

Number of small dot shaped soil particles	Total soiled area mm^2	Score
$N = 0$	$A = 0$	5
$0 < n \leq 4$	$0 < A \leq 4$	4
$4 < n \leq 10$	$4 < A \leq 20$	3
$10 < n$	$20 < A \leq 50$	2
Not applicable	$50 < A \leq 200$	1
Not applicable	$200 < A$	0
Each load item shall be awarded a score from the table according to the category of soil area or number of discrete soil particles adhering to the item. If the requirements for more than one score are met, the lowest applicable score shall be awarded.		

Copyright International Electrotechnical Commission
Provided by IHS under license with IEC
No reproduction or networking permitted without license from IHS Not for Resale

Table 2 – Evaluation to determine the cleaning index

Item No. (Refer to Annex A)	Type of soil	Items being cleaned	Number of items n_z	Number of single items a_b with score b						$C_z = \sum_{b=0}^{5} a_b \times b$
				5	4	3	2	1	0	
1a	Egg	Dinner plates (half)								
1b	Mincemeat	Dinner plates (half)								
2	Oat flakes	Soup plates								
3a	Egg	Dessert dishes (half)								
3b	Spinach	Dessert dishes (half)								
4	Tea	Cups								
5	Tea	Saucers								
6	Milk	Glasses								
7	Egg	Forks								
8	Oat flakes	Soup spoons								
9	None	Knives								
10	None	Teaspoons								
11	None	Dessert spoons								
12	Margarine	Oval platter								
13	Spinach	Medium serving bowl								
14	Spinach	Small serving bowl								
15	None	Two serving spoons								
16	None	Serving fork								
17	None	Gravy Ladle								
18	Mincemeat	Large serving bowl								
	N = See Formula (1)		C_i = See Formula (2a) or (2b), as appropriate							$\sum C_Z$ =
Notes:				Test No.:						

Equivalent items for an Annex B style load are given in B.4.

In the case of items 1 and 3, see the relevant subclause on soil preparation for instructions regarding an odd number of place settings.

NOTE The reference machine always uses a load style from Annex A, irrespective of the load style used on the test machine.

6.7.2 Calculation of the cleaning index

To calculate the total number of items N, use the following equation:

$$N = \sum_{z=1}^{18} n_z \qquad (1)$$

The total number of load items for Annex A loads is:

N = number of place settings × 11 + 8 (place settings ≥7);

N = number of place settings × 11 + 7 (place settings <7).

Copyright International Electrotechnical Commission
Provided by IHS under license with IEC
No reproduction or networking permitted without license from IHS Not for Resale

The total number of load items for the Annex B load is:

N = number of place settings × 11 + 6.

Calculate the single cleaning index approximated to 2 decimal places for the test and the reference machine. Use the following equations:

$$C_{R,i} = \frac{1}{N}\sum_{z=1}^{18} C_{R,z} \tag{2a}$$

$$C_{T,i} = \frac{1}{N}\sum_{z=1}^{18} C_{T,z} \tag{2b}$$

where

$C_{R,z}$ is calculated according to the formula given in Table 2 referred to the reference machine;

$C_{T,z}$ is calculated according to the formula given in Table 2 referred to the machine under test;

$C_{R,i}$ is the single cleaning index reference machine;

$C_{T,i}$ is the single cleaning index machine under test.

Record the logarithm of the single cleaning performance index of the machine under test, $P_{C,I}$ calculated to 3 decimal places:

$$\ln P_{C,i} = \ln\left(\frac{C_{T,i}}{C_{R,i}}\right) \tag{3}$$

On completion of n measurements, calculate the arithmetical average of ln $P_{C,i}$, the logarithm of the total cleaning performance, index P_C, of the machine under test using the following equation:

$$\ln P_C = \frac{1}{n}\sum_{i=1}^{n} \ln P_{C,i} \tag{4}$$

where n is the number of cleaning tests.

Next, calculate the logarithm of the cleaning standard deviation ln s_C of the ln $P_{C,i}$:

$$\ln s_C = \sqrt{\frac{1}{n-1}\left[\sum_{i=1}^{n} \ln P_{C,i}^{\ 2} - \frac{1}{n}\left(\sum_{i=1}^{n} \ln P_{C,i}\right)^2\right]} \tag{5}$$

and the half range of the logarithmic cleaning confidence interval ln W_C of ln P_C:

$$\ln W_C = \frac{\ln s_C}{\sqrt{n}} t_f; 1-\frac{\alpha}{2} \tag{6}$$

Copyright International Electrotechnical Commission
Provided by IHS under license with IEC
No reproduction or networking permitted without license from IHS Not for Resale

where

t_f; $1 - \alpha/2$ is a numerical factor, depending on the number $f = n - 1$ of degrees of freedom for the chosen confidence level $1 - \alpha = 0{,}95$ with two-sided demarcation (see Table 3).

Table 3 – Numerical Values of the *t*-factor for statistical calculations

n	*f*	t_f, $1 - \alpha/2$
2	1	12,71
3	2	4,30
4	3	3,18
5	4	2,78
6	5	2,57
7	6	2,45
8	7	2,37

6.7.2.1 Assessing ln W_C

The requirement is that ln W_C be less than 0,073.

Conduct 5 test cycles; if ln W_C < 0,073 is met, stop.

If ln W_C requirement is not met, conduct test cycle 6.

If ln W_C requirement is met, stop.

If ln W_C requirement is not met, conduct test cycle 7 – If ln W_C requirement is met, stop.

If ln W_C requirement is not met, conduct test cycle 8 – If ln W_C requirement is met, stop.

If dishwasher has self-cleaning or manual filters: conduct test cycles 9 to 12 with filter cleaning between each run.

NOTE See Annex J for a flow chart.

Cleaning index without filter cleaning is the average of cycles 1 to 8 (as applicable) (automatic or self-cleaning filter). Cleaning index with filter cleaning (if applicable) is the average of cycles 1, 9, 10, 11 and 12. Energy, time, and water is recorded for each series of cycles.

The reference machine should be cleaned if a series of cycles with filter cleaning is undertaken (i.e., before the start of cycle 9). A machine that is declared as manual filter would only have to perform cycles 1, 9, 10, 11, and 12.

The total cleaning performance index P_C is now given by: P_C = exp (ln P_C) with the limits: lower bound = exp (ln P_C – ln W_C) and upper bound = exp (ln P_C + ln W_C). The expected value of the total cleaning performance will be in this interval, with a probability of 95 %.

If a dishwasher scores zero in one or more of the cycles from 1 to 8, this score shall be included in the assessment of the total score.

NOTE In addition to the described statistical analysis, other methods of statistical analysis may be used. The number of samples of dishwashers tested may be increased, by the testing laboratory, to increase the level of confidence of the performance and energy evaluation.

Copyright International Electrotechnical Commission
Provided by IHS under license with IEC
No reproduction or networking permitted without license from IHS Not for Resale

6.8 Expressing results

6.8.1 Expressing results

The final cleaning result of the machine under test is the average of the initial series of test runs without filter cleaning and has to be reported with reference to the detergent used, in relation to the reference machine. Record the total cleaning performance index P_c [P_c = exp (In P_c)] of the machine under test, corrected to 2 decimal places.

If the dishwasher is tested with filter cleaning (see 6.7.2.1), the score is the average of test cycles 1, 9, 10, 11 and 12, and shall be declared as a manual filter dishwasher.

Energy consumption, water consumption and cycle time shall be recorded for each cycle.

6.8.2 The filter classification

a) Automatic filter – no user maintenance by the manufacturer.

b) Self-cleaning filter – occasional user maintenance required.

c) Manual filter – regular user maintenance required.

It shall not be permitted to rerun test cycles for an automatic filter dishwasher with filter cleaning, because, by definition, this dishwasher does not require filter cleaning.

If a dishwasher is tested with filter cleaning, this shall be declared with the results.

7 Drying performance

7.1 General and purpose

The purpose of this test is to measure how well the dishwasher dries the load.

NOTE This test may be used whether the dishwasher has a specific drying operation or not.

The drying performance measurement shall not be determined in conjunction with the measurement of the cleaning performance. The drying test shall be undertaken using clean place settings and serving pieces. Detergents and rinsing agents are used according to 5.7 and 5.8. Declared values for energy and water consumption shall not be determined during a drying test.

The sequence of the test procedure as specified in 5.2 shall be taken into account.

7.2 Load

The test load shall consist of the same number and type of place settings and service pieces as are used to measure the cleaning performance (see 6.2).

Dishware, glassware and cutlery shall be free of soil and watermarks, when loaded.

7.3 Loading and operating

7.3.1 Loading

Load the dishwasher in accordance with the manufacturer's instructions (without stacking the dishware or nesting the cutlery) in the same way that the machine was loaded for the measurement of the cleaning performance.

The reference dishwasher shall be loaded in accordance with Clause E.3.

--`,,`-`-`,,`,,`,`,,`---

Copyright International Electrotechnical Commission
Provided by IHS under license with IEC
No reproduction or networking permitted without license from IHS Not for Resale

7.3.2 Operating

At the completion of the cycle (see definitions), the door or cover is left closed and latched until commencing the evaluation procedure according to 7.4. This is to achieve results under comparable conditions.

Perform at least five complete cycles.

7.4 Evaluation

7.4.1 Assessing the drying

Lighting shall comply with the requirements of 6.7.1. After completing each cycle, the door or cover is left closed and latched. After 30 min from the completion of the cycle, open the door of the machine completely. Pull out the lower rack carefully (the racks shall not be taken out of the machine nor the machine moved) and start the evaluation. Judge the pieces by taking them out of the machine. Drying effect is evaluated by visual inspection and judged to be “dry”, “intermediate” or “wet”. Inspection of the items in the machine under test and the reference machine shall be carried out by the same person.

The lower rack is evaluated first to avoid any drops falling from the top rack onto load items in the bottom rack.

First, judge the crockery of the lower rack, then the crockery and glasses of the middle/upper rack, and finally the cutlery.

NOTE The cutlery is evaluated last irrespective of the location of the cutlery basket or rack. If located on the lower rack, the cutlery basket should be removed after the evaluation of items in the lower rack but before evaluating any items in the upper rack(s).

A maximum of 8 s is allowed for the evaluation of each piece of the place setting (remove from the machine, view, judge, put down, notice, note score). The viewing time for evaluation shall not be longer than 3 s.

- “Dry” is defined as an article being completely free of moisture. In this case, the article shall be given a score of 2.
- “Intermediate” is defined as an article having one or two drops of water, or one wet streak (run). In this case, the article shall be given a score of 1.
- “Wet” is defined as an article having more than two drops of water, or one drop and one streak, or two streaks, or water in glass or cup cavity. In this case, the article shall be given a score of 0.

Each item of the complete load shall be assessed and the score noted individually. Each type of observation (streaks, drops, water, etc.), if any, and the total number of relevant items shall also be noted according to Table 4.

--`,,`-`-`,,`,,`,`,`,,`---

Copyright International Electrotechnical Commission
Provided by IHS under license with IEC
No reproduction or networking permitted without license from IHS Not for Resale

Table 4 – Evaluation to determine the drying index

Item No. (Refer Annex A)	Items being dried	Type(s) of observation (streaks, drops, water)	Number of items n_z	Number of single items a_C with score C			$D_z = \sum_{C=0}^{2} a_C \times C$
				2	1	0	
1	Dinner plates						
2	Soup plates						
3	Dessert dishes						
4	Cups						
5	Saucers						
6	Glasses						
7	Forks						
8	Soup spoons						
9	Knives						
10	Teaspoons						
11	Dessert spoons						
12	Oval platter						
13	Medium serving bowl						
14	Small serving bowl						
15	Two serving spoons						
16	Serving fork						
17	Gravy ladle						
18	Large serving bowl						
	N = See Formula (7)		D_i = See Formula (8a) or (8b), as appropriate				ΣD_Z =
Notes:						Test No.:	

Equivalent items for an Annex B style load are given in B.4.

NOTE The reference machine always uses a load style from Annex A, irrespective of the load style used on the test machine.

7.4.2 Calculation of the drying index

To calculate the total number of items N, use the following equation:

$$N = \sum_{z=1}^{16} n_z \qquad (7)$$

Calculate the single drying index approximated to 2 decimal places for the test and the reference machine. Use the following equations:

$$D_{R,i} = \frac{1}{2N} \sum_{z=1}^{16} D_{R,z} \qquad (8a)$$

$$D_{T,i} = \frac{1}{2N} \sum_{z=1}^{16} D_{T,z} \qquad (8b)$$

--`,,,-`-`,,`,,`,`,,`---

Copyright International Electrotechnical Commission
Provided by IHS under license with IEC
No reproduction or networking permitted without license from IHS Not for Resale

where

$D_{R,z}$ is calculated according to the formula given in Table 4 referred to the reference machine;

$D_{T,z}$ is calculated according to the formula given in Table 4 referred to the machine under test;

$D_{R,i}$ is the single drying index reference machine;

$D_{T,i}$ is the single drying index machine under test.

Record the logarithm of the single drying performance index of the machine under test $P_{D,i}$ approximately to 3 decimal places;

$$\ln P_{D,i} = \ln\left(\frac{D_{T,i}}{D_{R,i}}\right) \tag{9}$$

On completion of n measurements, calculate the arithmetical average of IN $P_{D,I}$ the logarithm of the total drying performance index P_D of the machine under test using the following equation:

$$\ln P_D = \frac{1}{n} \sum_{i=1}^{n} P_{D,i} \tag{10}$$

where n is the number of drying test cycles.

Next, calculate the drying standard deviation In s_D of the In $P_{D,i}$

$$\ln s_D = \frac{1}{n-1} \sqrt{\sum_{i=1}^{n} \ln P_{D,i}^{\,2} - \frac{1}{n}\left(\sum_{i=1}^{n} \ln P_{D,i}\right)^2} \tag{11}$$

and the half range of the logarithmic drying confidence interval In W_D of In P_D:

$$\ln W_D = \frac{\ln s_D}{\sqrt{n}} t_f; 1-\frac{\alpha}{2} \tag{12}$$

where t_f; $1 - \alpha/2$ is a numerical factor, depending on the number $f = n - 1$ degrees of freedom for the chosen confidence level $1 - \alpha = 0{,}95$ with two-sided demarcation (see Table 3 for values of t-factors).

If the numerical value In W_D is more than 0,10, increase the number of tests until In W_D is equal to or less than 0,10 as set out in 6.7.2.1 for In W_C. The maximum number of tests is 8 runs for drying performance.

The total drying performance index P_D is now given by: P_D = exp (In P_D) with the limits:

lower bound = exp (ln P_D – ln W_D) and upper bound = exp (ln P_D + ln W_D).

The expected value of the total drying performance index will be in this interval with a probability of 95 %.

Copyright International Electrotechnical Commission
Provided by IHS under license with IEC
No reproduction or networking permitted without license from IHS Not for Resale

7.5 Expressing results

The final drying result of the machine under test shall be reported in relation to the reference machine. Record the total drying performance index P_D [P_D = exp (In P_D)] of the machine under test corrected to 2 decimal places.

8 Energy consumption, water consumption and time

8.1 General and purpose

The purpose of this measurement is to determine the electrical energy, the energy contained in the hot water if an external source of hot water is used, and the quantity of hot and/or cold water consumed by the dishwasher and the time it takes to complete a particular programme used for measuring the cleaning performance.

NOTE This standard recognises that in certain countries other legally mandated national standards are required for testing and labelling, pre-empting Clause 8.

8.2 Method of measurement

Energy, water consumption and time measurements used for declaration or verification shall be measured in conjunction with cleaning performance tests specified in Clause 6.

Energy consumption is measured in kWh to three decimal places, water consumption in litres to one decimal place, and time to the nearest minute.

Total energy consumption is the sum of the electrical E_e, cold water correction E_c (if any), and hot water energy E_h (if any).

The energy consumption and the water consumption are measured for each complete cycle (refer to 8.2.5), and the arithmetical mean of the values measured is calculated and reported. Programme time and cycle time are both determined (refer to 8.2.5). Specific guidance is provided in the following subclauses.

8.2.1 Regeneration operations

For dishwashers, where the regeneration of the water softener depends on demand and water hardness, and does not take place on every cycle, when calculating the arithmetical mean value of the energy, water consumption and time, if a regeneration operation takes place, within the test procedure, it shall be disregarded when declaring energy, water and time values.

NOTE The frequency of the regeneration operations in some machines is not predictable and depends on the adjustment of the softener and the water hardness of the water used by the laboratories.

In the test report, it shall be stated whether regeneration(s) occurred during the five (or more) test cycles.

8.2.2 Cold water energy correction

Cold water energy correction may be required if the cold water supply temperature is not 15,0 °C. Cold water energy correction is required only for those operations where cold water is used and where either the internal heater operates or where external hot water is also used.

$$E_c = (Q_c \times (t_c - 15))/860$$

Copyright International Electrotechnical Commission
Provided by IHS under license with IEC
No reproduction or networking permitted without license from IHS Not for Resale

where

E_c is the cold water energy correction, in kWh, for each operation, where water is heated or where external hot water is used by the dishwasher;

t_c is the measured average inlet temperature of the cold water, in degrees Celsius, for each operation, where water is heated or where external hot water is used by the dishwasher;

Q_c is the volume of the cold water used for each operation, where water is heated or where external hot water is used by the dishwasher.

Where a cold water energy correction value is calculated for more than one operation, the cold water energy correction for the whole test, is the sum of the values for each operation.

The correction shall be done when the temperature of the cold water supply is between 13 °C and 17 °C. Outside of this temperature range, the test is invalid. Note that the value of E_c for each operation may be positive or negative.

NOTE The value of 860 is derived from 3,6 MJ per kWh and 4,186 J/cal. 1 cal of energy is defined as a temperature rise of 1 °C for 1 ml of water. The energy embodied per litre per degree Celsius is therefore 4 186 J (3 600 000)/(4186) = 860.

8.2.3 Hot water energy

Hot water energy calculation is required if the dishwasher uses any hot water from an external source. It is calculated as the energy contained in the externally supplied hot water relative to the cold water temperature of 15 °C.

$$E_h = (Q_h \times (t_h - 15))/860$$

where

E_h is the hot water energy, in kWh, for each operation, where external hot water is used by the dishwasher;

t_h is the measured average inlet temperature of the hot water, in degrees Celsius, for each operation, where external hot water is used by the dishwasher;

Q_h is the volume of hot water, in litres, used for each operation, where external hot water is used by the dishwasher

Where hot water is used for more than one operation, the total hot water energy for the whole test is the sum of the values for each operation.

NOTE 1 The hot water energy, so calculated, includes only the energy embodied in the hot water, relative to the nominal cold water temperature and does not take into account any losses associated with the conversion and distribution of hot water that occur in different households and different countries.

NOTE 2 Hot water energy is highly sensitive to small changes in hot water temperature and thermostat settings. where the energy consumption of a dishwasher is being verified via a test, it is important that the hot water temperature used in the verification test match that of the test used as the basis of the original claim as far as possible. A verification energy adjustment should be used where the test hot water temperature during the verification test differs from the original claimed test water temperature:

$$E_{va} = Q_h \times (t_{hc} - t_{hv})/860$$

where

t_{hc} is the hot water temperature in original test;

t_{hv} is the hot water temperature in verification test;

Where the hot water supply temperature is less than the dishwasher thermostat heater temperature (where present), a verification adjustment should not be necessary.

Copyright International Electrotechnical Commission
Provided by IHS under license with IEC
No reproduction or networking permitted without license from IHS Not for Resale

8.2.4 Water consumption

Water consumption values for each operation are required to determine cold water correction values (refer to 8.2.2) and hot water energy (refer to 8.2.3) where applicable. Total water consumption shall be reported for each cycle with any appropriate adjustments made for the presence of a regeneration operation (refer to 8.2.1).

8.2.5 Time

Programme time is measured from the initiation of the programme (excluding any user programmed delay) until an end of programme indicator (this could be a sound, light or symbol on a display to indicate that the programme is complete and the user has access to the load). If there is no end of programme indicator, the programme time is equal to the cycle time. Programme time shall be reported for each cycle with any appropriate adjustments made for the presence of a regeneration operation (refer to 8.2.1).

Cycle time is measured from the initiation of the programme (excluding any user programmed delay) until all activity ceases (i.e. the end of the cycle). At the end of the cycle all activity in the dishwasher has ceased: the dishwasher may revert to off mode or it may have a steady state power consumption until the user opens the dishwasher or turns the unit off.

9 Airborne acoustical noise

Where an airborne acoustical noise measurement is required, it shall be measured according to IEC 60704-2-3 and shall be determined according to IEC 60704-3.

--`,,,-`-`,,`,,`,`,,`---

Copyright International Electrotechnical Commission
Provided by IHS under license with IEC
No reproduction or networking permitted without license from IHS Not for Resale

Annex A
(normative)

Place settings and serving pieces (non-AHAM style load)

A.1 General information

The tableware described below (or alternatively, items specified in Annex B), shall be used for testing. Each test load shall be all from Annex A or Annex B as applicable (i.e. not a mixture of items from each Annex). All pieces shall be free from cracks or other damage.

NOTE The reference machine always uses a load style from Annex A, irrespective of the load style used on the test machine.

The glaze of the china shall be in good condition. The glasses shall be clear and free from cloudiness.

Forks shall not have sharp edges. The prongs of forks, bowls of spoons, and blades of the knives shall be polished, and the handles shall have a “satin” finish.

The load shall consist of the specified number of place settings (specified in A.2) plus serving pieces (specified in A.3).

NOTE Suppliers of load items that meet these specifications are provided in Annex F.

A.2 Place setting specifications

One place setting shall consist of the pieces shown below:

Item No.	Item description	Diameter/ volume/ length	Shape/ style	Name	Colour
1	Dinner plate	260 mm	Arzberg 8500	City	White
2	Soup plate	230 mm	Arzberg 1382	1382	White
3	Dessert dish	190 mm	Arzberg 8500	City	White
4	Cup	0,21 litre	Arzberg 1382	1382	White
5	Saucer	140 mm	Arzberg 1382	1382	White
6	Glass	250 ml 60 mm	Beaker/Tall Form/Without rain	Schott Duran	
7	Fork	184 mm	WMF “Berlin”		
8	Soup spoon	195 mm	WMF “Berlin”		
9	Knife	203 mm	WMF “Berlin”		
10	Teaspoon	126 mm	WMF “Berlin”		
11	Dessert spoon	156 mm	WMF “Berlin”		

The mass of one place setting shall be:

– crockery + glass: 1 580 g ± 35 g;
– cutlery: 195 g ± 10 g.

Copyright International Electrotechnical Commission
Provided by IHS under license with IEC
No reproduction or networking permitted without license from IHS Not for Resale

A.3 Serving piece specifications

A.3.1 For dishwashers with a capacity of one to six place settings, the following serving pieces shall be included in the dishwasher load:

No.	Item description	Diameter/ length	Shape/ style	Name	Colour
12	Oval platter	320 mm	Arzberg 1382	1382	White
13	Medium serving bowl	160 mm	Arzberg 8700	Daily	White
14	Small serving bowl	130 mm	Arzberg 8500	City	White
15	Two serving spoons	260 mm	WMF “Berlin”		
16	Serving fork	192 mm	WMF “Berlin”		
17	Gravy ladle	175 mm	WMF “Berlin”		

The weight of the serving pieces (one to six place settings) shall be:

– Crockery: 1 330 g ± 30 g
– Cutlery: 255 g ± 5 g

A.3.2 For dishwashers with a capacity of **seven or more place settings**, the following serving bowl shall be included, in addition to those items specified in A.3.1, in the dishwasher load:

No.	Item description	Diameter/ length	Shape/ style	Name	Colour
18	Large serving bowl	200 mm	Arzberg 8700	Daily	White

The weight of the serving pieces (seven or more place settings) shall be:

– Crockery: 1 970 g ± 50 g
– Cutlery: 255 g ± 5 g

NOTE “Arzberg”, “Schott” and “WMF” are trade marks. This information is provided for the convenience of users of this international standard and does not constitute an endorsement by the IEC of this trade mark. Items of the similar specification may be used if they can be shown to lead to equivalent results.

Copyright International Electrotechnical Commission
Provided by IHS under license with IEC
No reproduction or networking permitted without license from IHS Not for Resale

Annex B
(normative)

AHAM style load[1)]
(to be used for other style dishwashers, such as U.S. style)

B.1 General information

The tableware described below (or alternatively, items specified in Annex A), shall be used for testing. Each test load shall be all from Annex A or Annex B as applicable (i.e. not a mixture of items from each annex). See Clause B.4 for a table of the pieces that are equivalent with Annex A. All pieces shall be free of cracks or other damage.

NOTE The reference machine always uses a load style from Annex A, irrespective of the load style used on the test machine.

The glaze of the china shall be in good condition. The glasses shall be clear and free from cloudiness.

Forks shall not have sharp edges. The prongs of forks, bowls of spoons, and blades of the knives shall be polished, and the handles shall have a “smooth” finish.

The load shall consist of the specified number of place settings (specified in B.2) plus serving pieces (specified in B.3).

NOTE Suppliers of load items that meet these specifications are provided in Annex F.

B.2 Place setting specifications

One place setting shall consist of the pieces shown below:

Item No.	Item description	Diameter/ volume/ length	Shape/ style	Name	Colour
1	Dinner plate	260 mm	Corning #6003893	Comcor	White
2	Fruit bowl	130 mm	Arzberg 8500	City	White
3	Bread & butter plate	170 mm	Arzberg 8500	City	White
4	Cup	0,21 l	Arzberg 1382	1382	White
5	Saucer	140 mm	Arzberg 1382	1382	White
6	Glass	250 ml 60 mm	Beaker /Tall Form/Without Drain	Schott Duran	
7	Dinner fork		Oneida 2619 FRSF	Accent	
8	Salad fork		Oneida 2619 SLF	Accent	
9	Knife solid handle		Oneida 2619 KPVF	Accent	
10	Teaspoon		Oneida 2619 FSLF	Accent	
11	Teaspoon (same as 10)		Oneida 2619 FSLF	Accent	

1 Source: BSR/AHAM DW-1.

Copyright International Electrotechnical Commission
Provided by IHS under license with IEC
No reproduction or networking permitted without license from IHS Not for Resale

The mass of one place setting shall be:

– crockery + glass: 1 080 g ± 30 g;
– cutlery: 175 g ± 5 g.

B.3 Serving piece specifications

B.3.1 For dishwashers with a capacity of one to six place settings, the following serving pieces shall be included in the dishwasher load:

No.	Item Description	Diameter/ Volume/ Length	Shape/ Style	Name	Colour
12	Oval platter	240 mm	Corning® #6011655	Comcor®	White
13	Serving bowl	1 l	Corning® #6003911	Corelle®	White
14	Fruit bowl	130 mm	Arzberg 8500	City	white
15	Two serving spoons		Oneida 2619STBF		
16	Serving fork		Oneida 2685FNC	Flight pattern	

NOTE There is no soup ladle in the Annex B load.

The weight of the serving pieces (one to six place settings) shall be:

– Crockery: 1 000 g ± 25 g
– Cutlery: 125 g ± 5 g

B.3.2 For dishwashers with a capacity of **seven or more place settings**, a second serving bowl (item 13) shall be included, in addition to those items specified in B.3.1, in the dishwasher load.

The weight of the serving pieces (seven or more place settings) shall be:

– Crockery: 1 625 g ± 40 g
– Cutlery: 125 g ± 5 g

NOTE “Arzberg”, “Schott”, “Oneida”, “Corning”, “Corelle” and “Comcor” are trade marks. This information is provided for the convenience of users of this international standard and does not constitute an endorsement by the IEC of this trade mark. Items of the similar specification may be used if they can be shown to lead to equivalent results.

B.4 Concordance with load items in Annex A

The text of this standard assumes that a load according to Annex A is used. When a load type specified in Annex B is used for testing, the following table shall be used to determine the soil type that is placed in the load items.

--`,,,-`-`,,`,,`,`,,`---
Copyright International Electrotechnical Commission
Provided by IHS under license with IEC
No reproduction or networking permitted without license from IHS
Not for Resale

Annex A item No.	Item description – Annex A	Annex B item No.	Item description – Annex B
1	Dinner plate	1	Dinner plate
2	Soup plate	2	Fruit bowl
3	Dessert dish	3	Bread & butter plate
4	Cup	4	Cup
5	Saucer	5	Saucer
6	Glass	6	Glass
7	Fork	7	Dinner fork
8	Soup spoon	8	Salad fork
9	Knife	9	Knife
10	Teaspoon	10	Teaspoon
11	Dessert spoon	11	Teaspoon (same as 10)
12	Oval platter (320 mm)	12	Oval platter (240 mm)
13	Medium serving bowl (160 mm)	13	Medium serving bowl (1 litre)
14	Small serving bowl (13 mm)	14	Fruit bowl (130 mm)
15	Two serving spoons	15	Two serving spoons
16	Serving fork	16	Serving fork
17	Gravy ladle	14	No equivalent item
18	Large serving bowl (200 mm) [a]	12	Medium serving bowl [a] (1 litre)
[a] In dishwashers of 7 or more place settings only. For an Annex B load there are 2 bowls (Item 12).			

--`,,,-`-`,,`,,`,`,,`---

Copyright International Electrotechnical Commission
Provided by IHS under license with IEC
No reproduction or networking permitted without license from IHS Not for Resale

Annex C
(informative)

Illustration of soil distribution

C.1 The following table illustrates the number of each item type soiled for a 12-place setting dishwasher.

Load items soiled	Spinach	Egg	Oat flakes	Meat
Soup plates			12	
Dessert dish	6	6		
Dinner plates		6		6 (18 g)
Small serving bowl	2			
Large serving bowl[a]				1 (4 g)
Total soil on crockery	**36 g**	**24 g**	**36 g**	**22 g**
Soil on cutlery	N/A	Total above includes soil for forks	Additional soil used for soup spoons	N/A
[a] This load item (and soil) is not included when the number of place settings is less than 7.				

NOTE In addition, tea is applied to tea cups, milk to beakers and margarine to the oval platter.

C.2 The following table illustrates the number of each item type soiled for a 9-place setting dishwasher.

Load items soiled	Spinach	Egg	Oat flakes	Meat
Soup plates			9	
Desert dish	4 + [a]	4 + [a]		
Dinner plates		4 + [a]		4 + [a] (13,5 g)
Small serving bowl	2			
Large serving bowl[a]				1 (4 g)
Total soil on crockery	**27 g**	**18 g**	**27 g**	**17,5 g**
Soil on cutlery	N/A	Total above includes soil for forks	Additional soil used for soup spoons	N/A
[a] This load item (and soil) is not included when the number of place settings is less than 7.				
[b] The odd dinner plate has half the top surface soiled with minced meat and half soiled with egg. The odd desert plate has half the top surface soiled with spinach and half soiled with egg.				

NOTE In addition, tea is applied to tea cups, milk to beakers and margarine to the oval platter.

C.3 The following table illustrates the number of each item type soiled for a 6-place setting dishwasher.

Load items soiled	Spinach	Egg	Oat flakes	Meat
Soup plates			6	
Desert dish	3	3		
Dinner plates		3		3 (9 g)
Small serving bowl	2			
Total soil on crockery	**18 g**	**12 g**	**18 g**	**9 g**
Soil on cutlery	N/A	Total above includes soil for forks	Additional soil used for soup spoons	N/A

NOTE In addition, tea is applied to tea cups, milk to beakers and margarine to the oval platter.

Copyright International Electrotechnical Commission
Provided by IHS under license with IEC
No reproduction or networking permitted without license from IHS Not for Resale

Annex D
(normative)

Test materials for laboratories

D.1 Detergent

D.1.1 Detergent B

The reference detergent containing no phosphate shall consist of the following.

Chemical substance	Specification	Wt. %
Sodium citrate dihydrate	N 1560/Jungbunzlauer	30,0
Maleic acid/acrylic acid copolymer Na salt	Alternative 1: Sokalan CP 5 Compound/Henkel 50 % active on sodium carbonate Alternative 2: Norasol WL 4/Norsohaas 30 % active on sodium carbonate	12,0 20,0
Sodium perborate monohydrate	--	5,0
Tetraacetyl ethylendiamine	TAED/Warwick	2,0
Sodium disilicate (noncrystalline)	Portil A/Cognis	25,0
Linear fatty alcohol ethoxylate (Nonionic surfactant, low foaming)	Plurafac LF403/BASF	2,0
Protease	Savinase X.0T/NOVO	40 KNPU/kg ‡ e.g. Savinase 8.0T: 0,5 %
Amylase	Termamyl xxT/NOVO	300 KNU/kg ‡ e.g. Termamyl 60T: 0,5 %
Sodium carbonate, anhydrous	Soda, leicht/Mathes & Weber	Add to 100
‡ = Activity units		

NOTE If using alternative components to those specified, it is essential that equivalent activity units, concentrations and ratios of active and carrier ingredients are used to obtain equivalent performance.

NOTE Detergent B is still used to check the performance of the reference machine in E.2.

D.1.2 Detergent C

The reference detergent containing phosphate but no chlorine bleach shall consist of the following.

Chemical substance	Specification	Wt. %
Sodium tripolyphosphate	Thermphos NW/Clariant	23,0
Tri-sodium citrate dihydrate	N 1560/Jungbunzlauer	22,3
Sodium perborate monohydrate	--	6,0
Tetraacetyl ethylendiamine	TAED/Warwick	2,0
Sodium disilicate (noncrystalline)	Portil A/Cognis	5,0
Linear fatty alcohol ethoxylate (Nonionic surfactant, low foaming)	Plurafac LF403/BASF	2,0
Maleic acid/acrylic acid copolymer Na salt	Alternative 1: Sokalan CP 5 Compound/Henkel 50 % active on sodium carbonate Alternative 2: Norasol WL 4/Norsohaas 30 % active on sodium carbonate	4,0 6,7

Copyright International Electrotechnical Commission
Provided by IHS under license with IEC
No reproduction or networking permitted without license from IHS Not for Resale

Chemical substance	Specification	Wt. %
Protease	Savinase X.0T/NOVO	80 KNPU/kg* ‡ e.g. Savinase 8.0T: 1,0 %
Amylase	Termamyl xxT/NOVO	420 KNU/kg* ‡ e.g. Termamyl 60T: 0,7 %
Sodium carbonate	Soda, leicht/Mathes & Weber	Add to 100
‡ = Activity units		

NOTE If using alternative components to those specified, it is essential that equivalent activity units, concentrations and ratios of active and carrier ingredients are used to obtain equivalent performance.

NOTE There may be a performance difference between detergent type B and type C.

Detergents shall be stored in a waterproofed bag in quantities of no more than 1 kg in a cool and dry atmosphere. They shall be used within six months and within one month of opening.

For the address of the supplier of the reference detergents, see Annex F.

D.2 Rinse agent

The reference rinse aids shall consist of the following.

Chemical substance	Specification	Formula "III" (acidic)	Formula "IV" (neutral)
Linear fatty alcohol ethoxylate (Nonionic surfactant, low foaming)	Plurafac LF 221/BASF	15,0	15,0
Cumene sulfonate	Stepanate SCS/Stepan (40 % solution in water.)	11,5	11,5
Citric acid (anhydrous)	--	3,0	-----
H_2O	Deionized water	Add to 100	Add to 100
Physical parameters:			
Viscosity [mpas]		17,0	11,0
pH (1 % in water)		2,2	6,3

D.3 Salt

Purity >99,4 % NaCl.

Insoluble components <0,05 %.

Grain size range <5 % to be <0,2 mm.

pH maximum 9,5.

NOTE "Jungbunzlauer", "Sokalan", "Henkel", "Norasol", "Norsohaas", "Warwick", "Portil", "Cognis", Plurfac, BASF, "Sauinase", "Termany", "Novo", "Mathis & Webber", "Thermosphos NW", "Clariant", "Stepanate" and "Stephan" are trade marks. This information is provided for the convenience of users of this international standard and does not constitute an endorsement by the IEC of this trade mark. Items of the similar specification may be used if they can be shown to lead to equivalent results.

Copyright International Electrotechnical Commission
Provided by IHS under license with IEC
No reproduction or networking permitted without license from IHS Not for Resale

Annex E
(normative)

Description of the reference machine

E.1 Specification of the reference machine

NOTE 1 A suitable reference machine that complies with the requirements of Clause E.1 is the Miele G590 or the Miele G595 that has been specially prepared for use as a reference machine by Miele. A complying reference machine can be obtained from the supplier as specified in Clause F.16.

"Miele" is a trade mark. This information is provided for the convenience of users of this international standard and does not constitute an endorsement by the IEC of this trade mark. Items of the similar specification may be used if they can be shown to lead to equivalent results.

General specifications and performance requirements:

– Rated voltage 230 V a.c., rated frequency 50 Hz (refer Clause E.2).

– Rinse aid dosage [setting: 2]: 2,5 ml – 3,0 ml.

Specifications of the reference programme (Universal 65 °C) using a clean load with no detergent:

– Spray arm rotations per min: top: 45 ± 4 (refer E.3.1.1)
  middle: 23 ± 4
  bottom: 35 ± 6

– Water hardness of sump water in the 2 heated rinses [mmol/l]: ≤0,7 (refer E.3.1.2)

– Water consumption [litres]: 27,8 ± 1,5 (refer E.3.1.3)

– Energy consumption [kWh]: 1,81 ± 0,2 (refer E.3.1.4)

– Water level measured in the sump [mm]: 20 ± 5 (on program completion) (refer E.3.1.5)

– Maximum water temperatures measured in the sump [°C]:
  - Cleaning operation: 66 ± 2 (refer E.3.1.6)
  - Heated rinse operations: 66 ± 2 (refer E.3.1.6)

– Program time (to 'Ende') [min]: 80,0 ± 4 (refer E.3.1.7)

– Cycle time (activity ceases) [min]: 89,0 ± 4 (refer E.3.1.7)

Specifications of the reference program (Universal 65 °C) when tested in accordance with Clause 6 (soiled load) using 25 g detergent B:

– Cleaning performance – Oven drying method (refer 6.5.1): 3,70 ± 0,20 (refer E.3.1.8)

– Cleaning performance – Air drying method (refer 6.5.2): 4,02 ± 0,20 (refer E.3.1.8)

NOTE 2 A range for cleaning index for the reference machine using detergent C is under consideration. Further information may be available from the supplier of the reference detergent – see Annex F.

Specifications of the reference program (Universal 65 °C) when tested in accordance with Clause 7 (clean load) using 25 g detergent B:

– Drying efficiency: 0,81 ± 0,09 (refer E.3.1.9).

Details on verifying the performance of the reference machine are set out in Clause E.3.

Copyright International Electrotechnical Commission
Provided by IHS under license with IEC
No reproduction or networking permitted without license from IHS Not for Resale

E.2 Installation and use of the reference machine

The reference machine shall be initially measured and checked by the manufacturer.

Check that the hoses are not bent. The height of the drain hose (measured from the bottom of the machine to the highest point of the hose) shall be: 60 cm ± 10 cm.

The reference machine is always installed as a free standing type, irrespective of the type of test machine(s).

The supply voltage and frequency of the reference machine shall be 230 V ± 2 % and 50 Hz ± 1 %, irrespective of the voltage and frequency of the test machine(s).

The reference machine always uses a load style from Annex A, irrespective of the load style used on the test machine.

E.3 Calibration of the reference machine

Before starting a series of tests, a calibration check of the reference machine shall be undertaken. To perform a calibration check on the reference dishwasher, the following measurements or observations shall be made and compared with the specifications and requirements given in Clause E.1. If the machine does not comply with the specified requirements, the test conditions, equipment and procedure shall be checked and the measurements repeated as appropriate. If there are no apparent faults but the reference machine still does not meet the specifications, contact the manufacturer to get this rectified.

Prior to performing calibration checks, ensure that all filters have been cleaned and that spray arm jets are free from any blockages. It is recommended that calibration checks be undertaken in the following order.

NOTE The checks on the reference machine specified in E.3.1.1 to E.3.1.7 can be verified with a single cycle with a clean load and without detergent. Tasks specified in E.3.1.8 and E.3.1.9 are verified over 5 cycles.

E.3.1.1 Checking spray arm rotations

A service viewing window and associated key shall be used with the reference machine to facilitate the performance of calibration checks of spray arm rotations. Spray arm rotations may be determined on any program on the reference machine with a clean load installed and no detergent. If the spray arm requirements specified in Clause E.1 are not met, remedial action shall be taken.

E.3.1.2 Checking the water hardness

When the reference machine is run on reference program (Universal 65 °C) with a clean load installed and no detergent, the values specified in Clause E.1 shall be achieved.

E.3.1.3 Adjusting total water consumption

Prior to checking other parameters on the reference program, the total water consumption should be checked and adjusted if necessary to achieve a value that is as close as possible to the target value specified in Clause E.1 on the reference program. This shall be done by adjusting the pressure-reducing valve on the water inlet which is provided with the reference machine. Measurements of water consumption are done with a clean load and no detergent (refer to E.3.1.4). Background and guidance on adjustment of water volume for the reference machine is provided in Annex M. Note that the actual water volume will have some influence on the energy consumption.

--`,,`,,-`-`,,`,,`,`,,`---

Copyright International Electrotechnical Commission
Provided by IHS under license with IEC
No reproduction or networking permitted without license from IHS Not for Resale

E.3.1.4 Checking the energy and water consumption

When the reference machine is run on reference program (Universal 65 °C) and in accordance with Clause 6, except with a clean load at room temperature and no detergent, the total energy consumption and water consumption values specified in Clause E.1 shall be achieved.

E.3.1.5 Checking the water level in the sump

The water level left in the sump is used as an indicator of the drain pump performance. The water level shall be measured at the completion of a cycle by removing the sieve and measuring the height of the water level from the lowest point of the sump. There is no adjustment for this parameter – a machine that operates outside the specified range will require servicing.

E.3.1.6 Checking the water temperature in the sump

The water temperature in the sump is used as an indicator of temperature control performance of the heating system in the reference machine. The water temperature shall be measured on the reference program during the heated wash operation and the heated rinse operations by means of a temperature sensor installed in the central hole of the sump (to prevent any bending of sieves). The temperature sensor shall be fully immersed but not close to any heating element. The temperature during each heating operation should be logged at regular intervals to verify compliance with Clause E.1.

E.3.1.7 Checking the program and cycle time

When the reference machine is run on the reference program (Universal 65 °C) and in accordance with Clause 6, except with a clean load at room temperature and no detergent, the program and cycle times specified in Clause E.1 shall be achieved.

The end of program indicator (the off or ‘Ende’ indicator on the facia panel) is reached approximately 9 min prior to the fan stopping (i.e. the end of the cycle). This time interval needs to be established accurately for the particular reference machine, but each machine should behave consistently. If required, the off or ‘Ende’ indicator (end of program) can be used as a proxy for checking the cycle time (taking into account the fan time).

E.3.1.8 Checking the cleaning performance

When the reference machine is run on reference program (Universal 65 °C) and in accordance with Clause 6 (i.e. with a soiled load and detergent) and the loading plan in Clause E.4, the values specified in Clause E.1 shall be achieved (average value based on 5 runs).

E.3.1.9 Checking the drying performance

When the reference machine is run on reference program (Universal 65 °C) and in accordance with Clause 7 (i.e. with a clean load and with detergent) and the loading plan in Clause E.4, the values specified in Clause E.1 shall be achieved (average value based on 5 runs).

--`,,`-`-`,,`,,`,`,,`---

Copyright International Electrotechnical Commission
Provided by IHS under license with IEC
No reproduction or networking permitted without license from IHS Not for Resale

E.4 Reference machine loading plan

NOTE The diagrams below have been supplied from CENELEC EN 50242, Amendment 3 (see Bibliography).

The reference machine shall be loaded as indicated in the following plans for each basket:

Cutlery tray

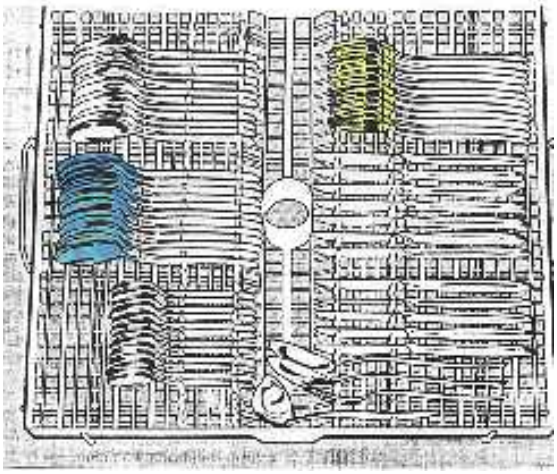

IEC 085/04

Upper basket

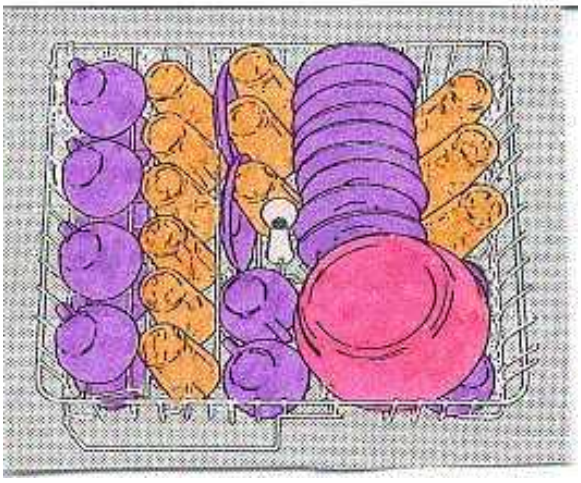

IEC 086/04

Lower basket

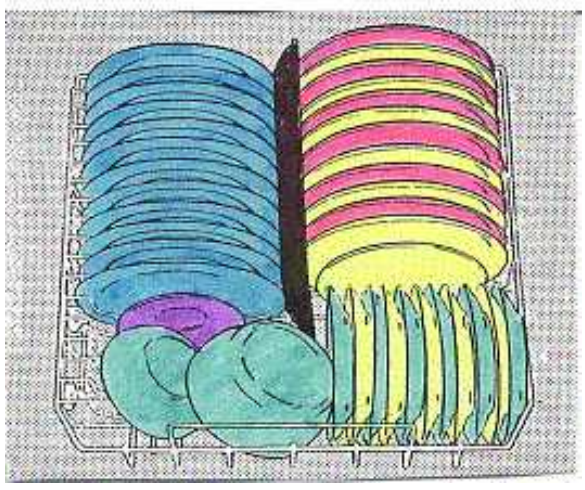

IEC 087/04

Key

Soil:	**Colour**
milk:	orange
tea:	violet
minced meat:	red
egg:	yellow
oat flakes:	blue
spinach:	green
margarine:	black

Copyright International Electrotechnical Commission
Provided by IHS under license with IEC
No reproduction or networking permitted without license from IHS Not for Resale

Annex F
(informative)

Addresses of suppliers[2)]

F.1 Plates and bowls that comply with the specification in Annex A can be obtained from Supplier F.6.

F.2 Cutlery that complies with the specification in Annex A may be obtained from:

WMF AG
Ab. OVH1 Tel: +49 7331 258 546
c/o Mr. Scherf Fax: +49 7331 258 107
Eberhard Str. k.scherf@wmf.de
D – 73309 GEISLINGEN/Steige
Germany

or from Supplier F6.

F.3 Tea that complies with the specification in 6.4.2 is:

Sir Winston Tea
Broken Orange Pekoe
Finest tea blend from Indian and Ceylon tea gardens

This brand of tea may be obtained in retail shops or from:
Teekanne GmbH
c/o Mr Kompch Tel: +49 211 5085 321
Kevelaerstrasse 21-23 Fax:+49 211 5084 139
D-40549 DUESSELDORF holger.kompch@teekanne.de
Germany

F.4 Oat flakes that comply with the specification in 6.4.5 are “Bluetenzarte Koellnflocken” and these may be obtained from:

Peter Koelln KGaA Tel: +49 4121 64 81 43
Koellnflockenwerke Fax: +49 4121 64 66 39
c/o Mrs. Wöhrmann Woehrmann@koelln.de
Wester Str: 22-24
25336 ELMSHORN
Germany

---

2 This information is given for the convenience of users of this International Standard and does not constitute an endorsement by IEC of these brands or suppliers.

Copyright International Electrotechnical Commission
Provided by IHS under license with IEC
No reproduction or networking permitted without license from IHS Not for Resale

F.5 Spinach that complies with the specification in 6.4.6 is “Junger Spinat” and this may be obtained from:

Fa. Langnese-Iglo GmbH
Unileverhaus Tel: + 49 40 3597 0
20355 Hamburg Fax: + 49 40 3597 2445
Germany

F.6 Reference dishwasher detergents that comply with the specification in Annex D may be obtained from:

Wfk – Testgewebe Tel: +49 2157 87 1977
c/o Mr. Hilgers Fax: +49 2157 90 657
Christenfeld 10 testgewebe@wfk.de
D – 41379 BRÜGGEN-BRACHT
Germany

or

US partner Tel: +1 (252) 794-9703
SDL/Textile Innovators lmyers@textileinnovators.com
Mr.Luther Myers Fax: +1 (252) 794-9704
P.O Box 8/101 Forest Street tic@albemarlenet.com
Windsor, North Carolina 27983, USA

F.7 Colour charts can be separately purchased as IEC 60350-CHAR:1999, *Electric cooking ranges, hobs, ovens and grills for household use – Methods for measuring performance – Color reference chart*, from:

International Electrotechnical Commission Tel: +41 22 919 0227
3 rue Varembe, PO Box 131 Fax: +41 22 919 0300
1211 Geneva 20, Switzerland http://www.iec.ch

or

Gretag Macbeth Tel: +1 (845) 565-7660 ext. 347
Munsell Color Services Fax: + 1 (845) 565-2511
617 Little Britain Rd. Suite 102 odell@gretagmacbeth.com
New Windsor,NY.12553-6148 contact: Ms Liz Odell
USA

F.8 A through-circulation thermal cabinet that complies with the specification in Clause G.2 is the Memmert ULP 800-DW1 [749 litre], equipped with wire shelves, and may be obtained from:

Memmert GmbH + Co. KG Tel: +49 9122 9250
PO Box 1720 Fax: +49 9122 14 585
D – 91107 SCHWABACH
Germany sales@memmert.com

--`,,`-`-`,,`,,`,`,,`---

Copyright International Electrotechnical Commission
Provided by IHS under license with IEC
No reproduction or networking permitted without license from IHS Not for Resale

F.9 A microwave oven that complies with the specification in Clause G.1 is the BOSCH HMT 752F and may be obtained from:

Bosch-Siemens-Hausgeraete GmbH
Mr. Beer, Abt. PG/ESV Fax: +49 9071 528 52
Robert-Bosch-Str. 16 hans.beer@bshg.com
D – 89407 DILLINGEN/DONAU
Germany

See Clause G.1 for a complete specification.

F.10 AHAM style load china that complies with the specification in Annex B may be obtained from Supplier F.6 or as follows:

Comcor R and Corelle R Dinner Plates,Serving Bowls and Platters may be obtained from
World Kitchen Inc. Ms.Andrea Kirkwood,sales rep.
9234 West Belmont Ave. Tel US toll free 1 800 451 7603
Franklin Park,IL 60131 Tel US toll free 1 630 236 7835
USA Fax +1 (630) 236 9851
kirkwoodal@worldkitchen.com

or

Customer service:
World Kitchen Inc Tel US toll free 1 800 947 1478
1200 South Antrim Way Fax US toll free 1 800 685 3950
Greencastle, Pennsylvania,17225
USA

F.11 AHAM and non-AHAM style load glasses that comply with the specification in Annexes A and B may be obtained from:

Schott Glas Tel.: +49 6131 664445
c/o Mr. Schaefer Fax: +49 6131 664040
Hattenbergstrasse 10 wolfgang.schaefer@schott.com
55122 Mainz
Germany

or

Supplier F.6

or

MG Scientific, Incorporated Tel: +1 (262) 947-7000
8500 107th Street www.mgscientific.com
Pleasant Prairie, WI. 53158
USA

Copyright International Electrotechnical Commission
Provided by IHS under license with IEC
No reproduction or networking permitted without license from IHS Not for Resale

F.12 AHAM style load cutlery that comply with the specification in Annex B may be obtained from:

Oneida Silversmiths Tel: +1 (315) 361-3360
163-181 Kenwood Avenue US toll free 1800 828-7033, ext. 3544
Oneida, NY 13421 Fax: +1 (315) 361-3608
USA Attn: Cathy Boyer

F.13 AHAM style load serving bowls and platters that comply with the specification in Annex B may be obtained from Supplier F10.

F.14 A range of dishwasher test materials specified in this standard may be obtained from:

Stamminger & Demirel Testmaterialien Tel: +49 9123 98 89 75
Erbsenbodenstr. 31 Fax: +49 9123 98 84 89
D-91207 LAUF r.stamminger@web.de
Germany

F.15 Suitable sample dividing equipment for detergent to comply with ISO 607 (refer to 5.7) may be obtained from:

Retsch GmbH & Co. KG Tel: +49 2129 5561 121
c/o Mrs. Hogefeld Fax: +49 2129 5561 184
Rheinische Strasse 36 info@retsch.de
42781 HAAN
Germany
Type: PTZ 100 with DR 15/40

F.16 A reference dishwasher that complies with the requirements of Annex E, together with a videotape that explains the soiling procedure in accordance with this standard and the required service window may be obtained from:

Miele & Cie GmbH & Co Tel: +49 5241 891434
Contact: Mr Wedeking Fax: +49 5241 892 470
Carl-Mielestrasse 29 lothar.wedeking@miele.de
D – 33332 Guetersloh
Germany

Copyright International Electrotechnical Commission
Provided by IHS under license with IEC
No reproduction or networking permitted without license from IHS Not for Resale

Annex G
(normative)

Microwave oven and through-circulation thermal cabinet

NOTE Suppliers of suitable equipment that complies with these specifications are listed in Annex F.

G.1 Microwave oven

(An example of a product that complies with this specification is BOSCH HMT 752F.)

– Diameter of the flat surface of the glass turntable: approximately 25 *cm*.
– Maximum output power setting of 780 W ± 80 W.
– Reduced output power setting of 150 W ± 50 W.
– Cooking time adjustable in 1 s steps.

NOTE The total diameter of the turntable of the microwave oven Bosch HMT 752F is ~27 cm, but the diameter of the plain surface is only ~25 cm – this is typical of many microwave turntables.

The microwave power output is measured according to IEC 60705.

NOTE The microwave oven should be calibrated every half a year.

G.2 Through-circulation thermal cabinet

(An example of a product that complies with this specification is Memmert ULP 800-DW1.)

The thermal cabinet shall be equipped with wire shelves.

The through-circulation thermal cabinet shall guarantee that the sample of test soil is uniformly dried. On completion of the drying cycle, there is an admissible temperature tolerance of ±5 K for all areas of the thermal cabinet where items are to be found.

Pre-heat the cabinet to working temperature of 80 °C before inserting the items.

After 60 minutes, the temperature discrepancy between the working temperature and the measuring point with the lowest temperature shall not exceed 10 K.

All temperature measurements shall be performed with soiled items in the cabinet.

For comparison tests, a minimum of 24 place settings shall be placed into the thermal cabinet.

Temperatures shall be recorded during drying. The measurement positions shall be specified.

NOTE 1 All thermal cabinets with a high heating and circulating capacity fulfil these requirements.

NOTE 2 Thermal cabinets with a low heating and circulating output will still meet these requirements if they are filled with fewer items. A reduction of the heating-up period may be taken into consideration.

NOTE 3 “Bosch” and “Memmert” are trade marks. This information is provided for the convenience of users of this international standard and does not constitute an endorsement by the IEC of this trade mark. Items of the similar specification may be used if they can be shown to lead to equivalent results.

Copyright International Electrotechnical Commission
Provided by IHS under license with IEC
No reproduction or networking permitted without license from IHS Not for Resale

Annex H
(informative)

Guidelines for assessing cleaning performance

H.1 Development of internal evaluation guides

To ensure that repeatable results are obtained in a laboratory, it is recommended that laboratories develop their own internal guidelines for the evaluation of soil and cleaning. These internal evaluation guidelines should be developed in the local language of the laboratory technicians and should cover types of stains and marks that are commonly left or re-deposited on loads in the particular laboratory. The types of stains and marks will be influenced by the design of typical machines tested (performance, presence of water softeners etc.) as well as local factors (water hardness and quality of water used). Internal assessment guides should only provide guidance on interpretation for those stains and marks that may be ambiguous with regard to assessment for cleaning performance. Any particle, mark or spot that is clearly soil or has a soil content must be assessed as soil in accordance with 6.7.

The use of internal guides is an important way of helping to achieve consistency within laboratories and also will assist in the development and training of new assessors.

The following section, which is reproduced from the Australian/New Zealand standard AS/NZS2007.1-2003, provides an example of the types of issues that may be covered by internal evaluation guides.

H.2 Sample guideline from AS/NZS 2007.1-2003

H.2.1 Assessment of marks and stains

H.2.1.1 Finger marks

Marks created by handling during the evaluation process shall be ignored for the purposes of the washing evaluation.

H.2.1.2 Detergent

Undissolved, redeposited detergent shall be considered soil for the purposes of a washing evaluation.

H.2.1.3 Wet stains

A wet mark shall be ignored if it is transparent or cloudy white in colour. If it is any other colour (typically green or pinkish) the coloured area shall be considered soil and assessed by size accordingly. If the coloured area encloses a non-coloured or cloudy white area, this area shall be considered part of the coloured area when assessing the soil.

H.2.1.4 Dry stains

If a dry stain contains any coloured portion (other than cloudy white) that portion shall be considered to be soil and assessed as in H.2.1.3.

If any portion of a dry stain is colourless or cloudy white, the examiner shall lightly draw the pad of one finger from a clean section of the item onto the stain. If the stain is discernible as a raised area according to this method, then the whole stain shall be considered to be soil and assessed as in H.2.1.3.

Copyright International Electrotechnical Commission
Provided by IHS under license with IEC
No reproduction or networking permitted without license from IHS Not for Resale

If the stain feels rough, but is not revealed as a raised area on the surface, then it shall be ignored.

If any stain feels sticky to the touch, then the sticky portion shall be considered soil and assessed as soil in H.2.1.3.

H.2.1.5 Infant cereal stains

NOTE Infant cereal in this standard is equivalent to oat flakes.

If infant cereal remains on the soup spoons as a pattern of fine pale lines (i.e. brush marks) the total area covered by the lines and all of the spaces between the lines shall be considered to be soil and assessed by size accordingly.

H.2.1.6 Stains surrounding particles

If particles or other specks of matter are surrounded by a clear or cloudy white stain (either wet or dry) the sum of the areas of the individual specks only shall be estimated and this area assessed as a soiled area.

NOTE This process may be accomplished by mentally compressing the specks into a single, continuous stain and comparing the resulting area to the sample areas.

Copyright International Electrotechnical Commission
Provided by IHS under license with IEC
No reproduction or networking permitted without license from IHS Not for Resale

Annex I
(normative)

Test enclosure for built-in dishwasher

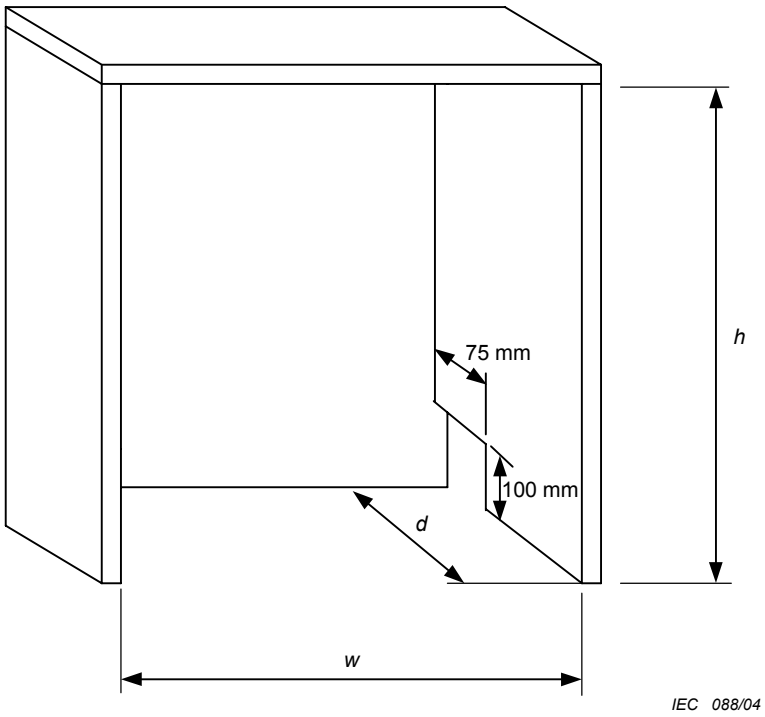

Figure I.1 – Test enclosure for built-in dishwasher

Key

h = Inside height = Nominal height of dishwasher + (2 - 4) mm;

w = Inside width = Nominal width of dishwasher + (4 – 6) mm;

d = Inside depth = Overall depth of dishwasher + (20 – 50) mm, but *d* not less than 550 mm.

Enclosure material: 19 mm thick untreated particle board (chipboard) or untreated plywood with a density of (600-750) kg/m^3.

Copyright International Electrotechnical Commission
Provided by IHS under license with IEC
No reproduction or networking permitted without license from IHS Not for Resale

Copyright International Electrotechnical Commission
Provided by IHS under license with IEC
No reproduction or networking permitted without license from IHS
Not for Resale

Annex J
(informative)

Flow chart – test sequence for IEC 60436

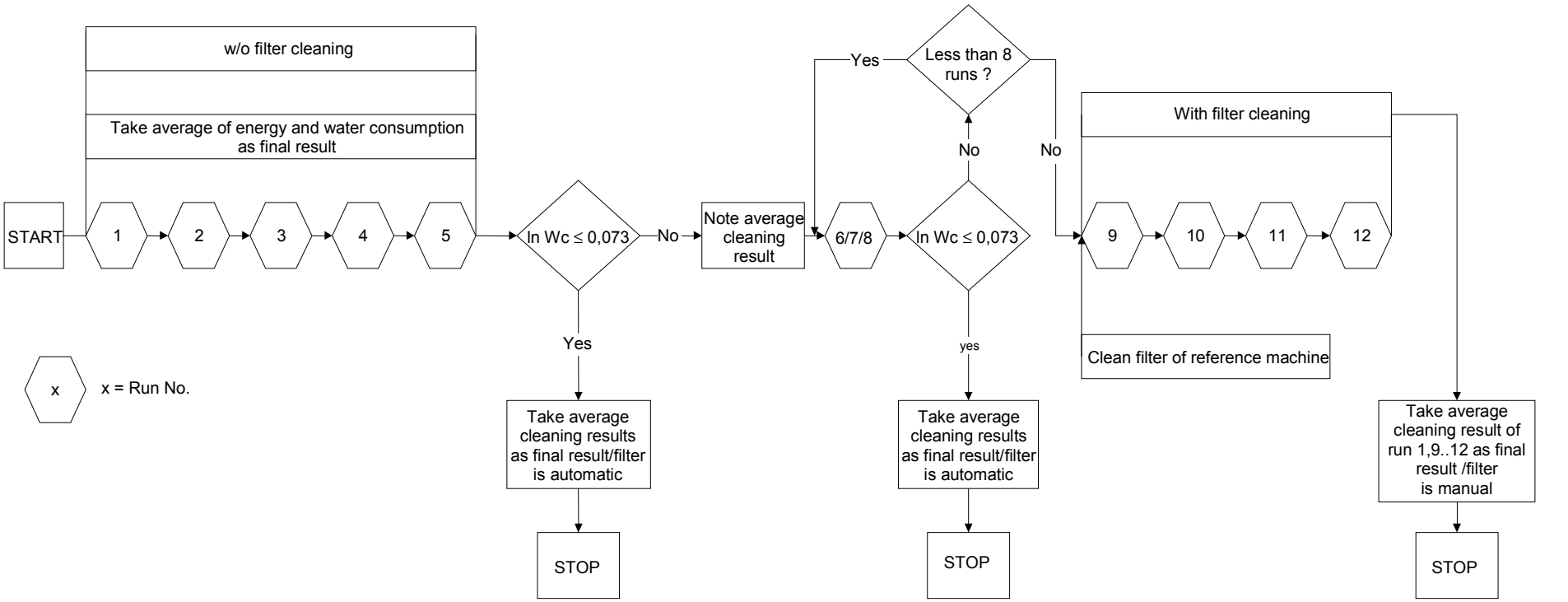

IEC 089/04

Annex K
(normative)

Shade chart

This annex specifies the shade numbers for various colours together with their CIE references and corresponding Munsell notation.

Shade number	Colour	CIE reference			Munsell notation
		CIE.X	CIE.Y	Y	
4		0,363	0,380	78,7	5Y 9/4
6		0,396	0,40	59,1	2,5Y 8/6
8		0,412	0,396	43,1	10YR 7/6
10		0,46	0,41	30,1	7,5YR 6/8
12		0,442	0,392	19,8	7,5YR 5/6
14		0,465	0,387	12,0	5YR 4/6
16		0,42	0,37	12,0	5YR 4/4
18		0,31	0,316	3,1	N2

A separate colour gauge can be found in IEC 60350 (see F.7 for details).

Copyright International Electrotechnical Commission
Provided by IHS under license with IEC
No reproduction or networking permitted without license from IHS Not for Resale

Annex L
(informative)

Test report format

A test report including the following information should be prepared for each test undertaken.

L.1 Machine description

- Brand, model, serial number, type, country of manufacture, date of manufacture (if indicated), place settings.
- Water connection available (hot/cold/dual), internal heater (Y/N), water softener fitted?
- Appliance dimensions.
- Origin of machine (how obtained).
- Claimed values: water, energy, time (label values if applicable), filter type.
- Recommendations for use: rinse aid setting or dose, detergent dose (and placement), water softener adjustment (if available), program.

L.2 Laboratory details

- Laboratory details (name address, test officers, dates of test, certification, accreditation).
- Test report number or identifier.

L.3 Test Conditions

- Ambient conditions (temperature and humidity).
- Water hardness and supply system, water supply pressure, water supply temperature.
- Electricity supply (voltage & frequency) and regulation system.
- Details of metering and equipment.
- Reference machine brand, model, serial number, calibration and check details.
- Reference detergent and batch.
- Rinse aid and batch.
- Salt (or other softener catalyst) and batch.

Copyright International Electrotechnical Commission
Provided by IHS under license with IEC
No reproduction or networking permitted without license from IHS Not for Resale

L.4 Test Results and measurements

L.4.1 Setup

- Program selected, water connection mode tested, detergent dosage (pre-wash and main wash), rinse aid setting or dose, softener settings (if applicable), dishwasher loading diagram, style of load (AHAM or non-AHAM), place settings tested.

- Type of test (research, basis of claim, verification).

L.4.2 Results

Supply the following results for the test machine and the reference machine:

- Washing scores (include Table 2 or equivalent).

- Drying scores (include Table 4 or equivalent).

- Measured water consumption, program and cycle time, energy consumption, details of operations for each test (time, heater operation, water consumption, load type, cold water energy correction and hot water energy) – set out details for reference and test machine(s) in the format of the following table.

- Electricity supply measurements (voltage and frequency).

- Noise measurements (where applicable).

- Type of filter system (declared and determined).

Copyright International Electrotechnical Commission
Provided by IHS under license with IEC
No reproduction or networking permitted without license from IHS Not for Resale

Copyright International Electrotechnical Commission
Provided by IHS under license with IEC
No reproduction or networking permitted without license from IHS
Not for Resale

Table L.1 – Detailed results for test machine(s) and reference machine

Operation	Cold water volume (Q_c) L	Average cold water temperature (t_c) °C	Cold water correction energy (E_c) kWh	Hot water volume (Q_h) L	Average hot water temperature (t_h) °C	Hot water supply energy (E_h) kWh	Total water volume (Q_t) L	Electrical energy (E_e) kWh	Elapsed time min	Heater operates? (Y/N)	Maximum[a] water bath temperature °C
Total	$Q_{c\,pr}$ =		$E_{c\,pr}$ =	$Q_{h\,pr}$ =		$E_{h\,pr}$ =	$Q_{t\,pr}$ =	$E_{e\,pr}$ =			

[a] Required for **dishwashers** under test and the **reference machine.**

Annex M
(informative)

Adjusting water consumption in the reference dishwasher

M.1 Purpose

This annex provides guidance on how to adjust the water consumption of the reference dishwasher in order to achieve the target water consumption of 27,8 l. The text has been prepared specifically for the Miele G590 and the Miele G595[3)] reference dishwashers, but is applicable to any suitable reference machine that complies with Annex E.

M.2 Background

In order to get repeatable and reproducible performance from the reference dishwasher, it is important that the water consumption be carefully monitored and adjusted periodically so that its average total water consumption during the Universal programs (or those with 4 fills) are as close as possible to the target water consumption of 27,8 l (this includes the water consumed in the regeneration operation at the start of each program).

Although the reference dishwasher uses a pressure switch to stop overfilling, each fill is controlled primarily by a timer. Therefore the flow rate of the water into the dishwasher (and hence the fill volume) is affected by the water pressure at the dishwasher inlet. Each reference dishwasher is supplied with a pressure control valve which must be installed and which should be used to adjust the inlet pressure so that the fill volume is as close as possible to the target volume. If the laboratory supply pressure varies from day to day, it may be necessary to also adjust the inlet pressure reduction valve on the reference dishwasher to compensate for these changes. This aspect of the reference machine performance needs ongoing monitoring.

M.3 Target values

Experience has shown that to achieve the target volume of 27,8 l in the reference machine on a 4 fill program (e.g. Gentle, Universal), the fill volumes will be approximately as follows:

(a) regeneration: 3,15 l.

(b) pre-wash, main wash, rinse 1, rinse 2: four fills of 6,16 l each.

Measurements on a number of reference dishwashers suggest that the regeneration operation is generally around 11,1 % to 11,3 % of the total water consumption volume for 4 fill programs. However, this can be slightly higher or lower, depending on the machine under test and the particular run. Each fill volume typically varies by less than 50 ml when inlet pressure conditions are stable (again this depends on the machine to some degree). Fill volume variations (when measured in ml) for the regeneration operation are similar to other operations, so this operation appears slightly more variable (in relative terms) than other operations.

Initial adjustment can be made by allowing the dishwasher to progress through a regeneration and a single fill operation (pre-wash) on the selected program. The total water volume can be estimated by adding the regeneration volume to 4 times the pre-wash fill volume. If this is higher than 27,8 l, the pressure reduction valve should be closed down and another trial conducted (and vice versa if the volume is too low). When it is estimated that the dishwasher is close to the target, the total volume should be confirmed with a full cycle on the selected program (using a load with no detergent as specified in Annex E). The fill volume should be largely unaffected by the presence of soil or detergent in the load.

---

3) Miele G590 and Miele G595 are the trade names of products supplied by Miele. This information is provided for the convenience of users of this international standard and does not constitute an endorsement by the IEC of this trade mark. Items of the similar specification may be used if they can be shown to lead to equivalent results.

Copyright International Electrotechnical Commission
Provided by IHS under license with IEC
No reproduction or networking permitted without license from IHS Not for Resale

Bibliography

AS/NZS 2007.1:2003, *Performance of household electrical appliances – Dishwashers – Part 1: Energy consumption and performance*

DIN 5035-1:1990, *Artificial lighting – Part 1: Terminology and general requirements*

DIN 5035-6:1990, *Artificial lighting – Part 6: Measurement and evaluation*

DIN EN 12665, *Light and lighting – Basic terms and criteria for specifying lighting requirements*

EN 50242:2000, *Electric Dishwashers for Household Use – Test Methods for Measuring the Performance*
Amendment 3:2001, *New Method of Preparing Spinach Soiling*

Copyright International Electrotechnical Commission
Provided by IHS under license with IEC
No reproduction or networking permitted without license from IHS Not for Resale

Standards Survey

The IEC would like to offer you the best quality standards possible. To make sure that we continue to meet your needs, your feedback is essential. Would you please take a minute to answer the questions overleaf and fax them to us at +41 22 919 03 00 or mail them to the address below. Thank you!

Customer Service Centre (CSC)

International Electrotechnical Commission
3, rue de Varembé
1211 Genève 20
Switzerland

or

Fax to: **IEC**/CSC at +41 22 919 03 00

Thank you for your contribution to the standards-making process.

Nicht frankieren
Ne pas affranchir

Non affrancare
No stamp required

A Prioritaire

RÉPONSE PAYÉE

SUISSE

Customer Service Centre (CSC)
International Electrotechnical Commission
3, rue de Varembé
1211 GENEVA 20
Switzerland

Copyright International Electrotechnical Commission
Provided by IHS under license with IEC
No reproduction or networking permitted without license from IHS
Not for Resale

Q1 Please report on **ONE STANDARD** and **ONE STANDARD ONLY**. Enter the exact number of the standard: *(e.g. 60601-1-1)*

.....

Q2 Please tell us in what capacity(ies) you bought the standard *(tick all that apply).* I am the/a:

purchasing agent ❑
librarian ❑
researcher ❑
design engineer ❑
safety engineer ❑
testing engineer ❑
marketing specialist ❑
other.....

Q3 I work for/in/as a: *(tick all that apply)*

manufacturing ❑
consultant ❑
government ❑
test/certification facility ❑
public utility ❑
education ❑
military ❑
other.....

Q4 This standard will be used for: *(tick all that apply)*

general reference ❑
product research ❑
product design/development ❑
specifications ❑
tenders ❑
quality assessment ❑
certification ❑
technical documentation ❑
thesis ❑
manufacturing ❑
other.....

Q5 This standard meets my needs: *(tick one)*

not at all ❑
nearly ❑
fairly well ❑
exactly ❑

Q6 If you ticked NOT AT ALL in Question 5 the reason is: *(tick all that apply)*

standard is out of date ❑
standard is incomplete ❑
standard is too academic ❑
standard is too superficial ❑
title is misleading ❑
I made the wrong choice ❑
other .....

Q7 Please assess the standard in the following categories, using the numbers:
(1) unacceptable,
(2) below average,
(3) average,
(4) above average,
(5) exceptional,
(6) not applicable

timeliness.....
quality of writing.....
technical contents.....
logic of arrangement of contents .....
tables, charts, graphs, figures.....
other .....

Q8 I read/use the: *(tick one)*

French text only ❑
English text only ❑
both English and French texts ❑

Q9 Please share any comment on any aspect of the IEC that you would like us to know:

.....
.....
.....
.....
.....
.....
.....
.....
.....
.....
.....
.....

Copyright International Electrotechnical Commission
Provided by IHS under license with IEC
No reproduction or networking permitted without license from IHS
Not for Resale

Copyright International Electrotechnical Commission
Provided by IHS under license with IEC
No reproduction or networking permitted without license from IHS
Not for Resale

ISBN 2-8318-7410-6



ICS 97.040.40

Typeset and printed by the IEC Central Office
GENEVA, SWITZERLAND

-`-`-`,,,-`-`,,`,,`,`,,`---

Copyright International Electrotechnical Commission
Provided by IHS under license with IEC
No reproduction or networking permitted without license from IHS

Not for Resale