IEC 60335-2-50

Edition 4.1 2008-03

INTERNATIONAL STANDARD

Household and similar electrical appliances – Safety – Part 2-50: Particular requirements for commercial electric bains-marie



IEC 60335-2-50:2002+A1:2007(E)

Copyright International Electrotechnical Commission
Provided by IHS under license with IEC
No reproduction or networking permitted without license from IHS
Not for Resale



THIS PUBLICATION IS COPYRIGHT PROTECTED

Copyright © 2008 IEC, Geneva, Switzerland

All rights reserved. Unless otherwise specified, no part of this publication may be reproduced or utilized in any form or by any means, electronic or mechanical, including photocopying and microfilm, without permission in writing from either IEC or IEC's member National Committee in the country of the requester.

If you have any questions about IEC copyright or have an enquiry about obtaining additional rights to this publication, please contact the address below or your local IEC member National Committee for further information.

IEC Central Office
3, rue de Varembé
CH-1211 Geneva 20
Switzerland
Email: inmail@iec.ch
Web: www.iec.ch

About the IEC

The International Electrotechnical Commission (IEC) is the leading global organization that prepares and publishes International Standards for all electrical, electronic and related technologies.

About IEC publications

The technical content of IEC publications is kept under constant review by the IEC. Please make sure that you have the latest edition, a corrigenda or an amendment might have been published.

- Catalogue of IEC publications: www.iec.ch/searchpub

The IEC on-line Catalogue enables you to search by a variety of criteria (reference number, text, technical committee,…). It also gives information on projects, withdrawn and replaced publications.

- IEC Just Published: www.iec.ch/online_news/justpub

Stay up to date on all new IEC publications. Just Published details twice a month all new publications released. Available on-line and also by email.

- Electropedia: www.electropedia.org

The world's leading online dictionary of electronic and electrical terms containing more than 20 000 terms and definitions in English and French, with equivalent terms in additional languages. Also known as the International Electrotechnical Vocabulary online.

- Customer Service Centre: www.iec.ch/webstore/custserv

If you wish to give us your feedback on this publication or need further assistance, please visit the Customer Service Centre FAQ or contact us:

Email: csc@iec.ch
Tel.: +41 22 919 02 11
Fax: +41 22 919 03 00

Copyright International Electrotechnical Commission
Provided by IHS under license with IEC
No reproduction or networking permitted without license from IHS

Not for Resale

IEC 60335-2-50

Edition 4.1 2008-03

INTERNATIONAL STANDARD

Household and similar electrical appliances – Safety – Part 2-50: Particular requirements for commercial electric bains-marie

INTERNATIONAL ELECTROTECHNICAL COMMISSION

PRICE CODE CB

ICS 97.040.20

ISBN 2-8318-9544-8

--`,,```,,,,````-`-`,,`,,`,`,,`---

Copyright International Electrotechnical Commission
Provided by IHS under license with IEC
No reproduction or networking permitted without license from IHS

Not for Resale

CONTENTS

FOREWORD 3
INTRODUCTION 5

1 Scope 6
2 Normative references 6
3 Definitions 6
4 General requirement 7
5 General conditions for the tests 8
6 Classification 8
7 Marking and instructions 8
8 Protection against access to live parts 10
9 Starting of motor-operated appliances 10
10 Power input and current 10
11 Heating 10
12 Void 11
13 Leakage current and electric strength at operating temperature 11
14 Transient overvoltages 11
15 Moisture resistance 11
16 Leakage current and electric strength 14
17 Overload protection of transformers and associated circuits 14
18 Endurance 14
19 Abnormal operation 14
20 Stability and mechanical hazards 14
21 Mechanical strength 15
22 Construction 15
23 Internal wiring 16
24 Components 17
25 Supply connection and external flexible cords 17
26 Terminals for external conductors 17
27 Provision for earthing 17
28 Screws and connections 18
29 Clearances, creepage distances and solid insulation 18
30 Resistance to heat and fire 18
31 Resistance to rusting 18
32 Radiation, toxicity and similar hazards 18

Annexes 20

Bibliography 20

Figure 101 – Splash apparatus 19

--`,,```,,,,````-`-`,,`,,`,`,,`---

Copyright International Electrotechnical Commission
Provided by IHS under license with IEC
No reproduction or networking permitted without license from IHS Not for Resale

INTERNATIONAL ELECTROTECHNICAL COMMISSION

HOUSEHOLD AND SIMILAR ELECTRICAL APPLIANCES – SAFETY –

Part 2-50: Particular requirements for commercial electric bains-marie

FOREWORD

1) The International Electrotechnical Commission (IEC) is a worldwide organization for standardization comprising all national electrotechnical committees (IEC National Committees). The object of IEC is to promote international co-operation on all questions concerning standardization in the electrical and electronic fields. To this end and in addition to other activities, IEC publishes International Standards, Technical Specifications, Technical Reports, Publicly Available Specifications (PAS) and Guides (hereafter referred to as "IEC Publication(s)"). Their preparation is entrusted to technical committees; any IEC National Committee interested in the subject dealt with may participate in this preparatory work. International, governmental and non-governmental organizations liaising with the IEC also participate in this preparation. IEC collaborates closely with the International Organization for Standardization (ISO) in accordance with conditions determined by agreement between the two organizations.
2) The formal decisions or agreements of IEC on technical matters express, as nearly as possible, an international consensus of opinion on the relevant subjects since each technical committee has representation from all interested IEC National Committees.
3) IEC Publications have the form of recommendations for international use and are accepted by IEC National Committees in that sense. While all reasonable efforts are made to ensure that the technical content of IEC Publications is accurate, IEC cannot be held responsible for the way in which they are used or for any misinterpretation by any end user.
4) In order to promote international uniformity, IEC National Committees undertake to apply IEC Publications transparently to the maximum extent possible in their national and regional publications. Any divergence between any IEC Publication and the corresponding national or regional publication shall be clearly indicated in the latter.
5) IEC provides no marking procedure to indicate its approval and cannot be rendered responsible for any equipment declared to be in conformity with an IEC Publication.
6) All users should ensure that they have the latest edition of this publication.
7) No liability shall attach to IEC or its directors, employees, servants or agents including individual experts and members of its technical committees and IEC National Committees for any personal injury, property damage or other damage of any nature whatsoever, whether direct or indirect, or for costs (including legal fees) and expenses arising out of the publication, use of, or reliance upon, this IEC Publication or any other IEC Publications.
8) Attention is drawn to the Normative references cited in this publication. Use of the referenced publications is indispensable for the correct application of this publication.
9) Attention is drawn to the possibility that some of the elements of this IEC Publication may be the subject of patent rights. IEC shall not be held responsible for identifying any or all such patent rights.

This part of International Standard IEC 60335 has been prepared by IEC subcommittee 61E: Safety of electrical commercial catering equipment, of IEC technical committee 61: Safety of household and similar electrical appliances.

This consolidated version of IEC 60335-2-50 consists of the fourth edition (2002) [documents 61E/405/FDIS and 61E/417/RVD] and its amendment 1 (2007) [documents 61E/588/FDIS and 61E/593/RVD].

The technical content is therefore identical to the base edition and its amendment and has been prepared for user convenience.

It bears the edition number 4.1.

A vertical line in the margin shows where the base publication has been modified by amendment 1.

Copyright International Electrotechnical Commission
Provided by IHS under license with IEC
No reproduction or networking permitted without license from IHS Not for Resale

This part 2 is to be used in conjunction with the latest edition of IEC 60335-1 and its amendments. It was established on the basis of the fourth edition (2001) of that standard.

NOTE 1 When “Part 1” is mentioned in this standard, it refers to IEC 60335-1.

This part 2 supplements or modifies the corresponding clauses in IEC 60335-1, so as to convert that publication into the IEC standard: Safety requirements for commercial electric bains-marie.

When a particular subclause of Part 1 is not mentioned in this part 2, that subclause applies as far as is reasonable. When this standard states "addition", "modification" or "replacement", the relevant text in Part 1 is to be adapted accordingly.

NOTE 2 The following numbering system is used:

– subclauses, tables and figures that are numbered starting from 101 are additional to those in Part 1;
– unless notes are in a new subclause or involve notes in Part 1, they are numbered starting from 101, including those in a replaced clause or subclause;
– additional annexes are lettered AA, BB, etc.

NOTE 3 The following print types are used:

– requirements: in roman type;
– *test specifications: in italic type;*
– notes: in small roman type.

Words in **bold** in the text are defined in Clause 3. When a definition of Part 1 concerns an adjective, the adjective and the associated noun are also in bold .

The following differences exist in the countries indicated below.

– 6.1: Class 01 appliances are allowed (Japan).
– 6.2: For appliances intended to be installed in a kitchen, an appropriate degree of protection against harmful ingress of water is required according to their height of installation (France).
– 13.2: Leakage current limits are different (Japan).
– 16.2: Leakage current limits are different (Japan).
– Clause 21: For appliances intended to be installed in a kitchen, different values of impact energy are applicable according to the height of the impact point (France).

The committee has decided that the contents of the base publication and its amendments will remain unchanged until the maintenance result date indicated on the IEC web site under "http://webstore.iec.ch" in the data related to the specific publication. At this date, the publication will be

- reconfirmed,
- withdrawn,
- replaced by a revised edition, or
- amended.

Copyright International Electrotechnical Commission
Provided by IHS under license with IEC
No reproduction or networking permitted without license from IHS Not for Resale

INTRODUCTION

It has been assumed in the drafting of this International Standard that the execution of its provisions is entrusted to appropriately qualified and experienced persons.

This standard recognizes the internationally accepted level of protection against hazards such as electrical, mechanical, thermal, fire and radiation of appliances when operated as in normal use taking into account the manufacturer's instructions. It also covers abnormal situations that can be expected in practice.

This standard takes into account the requirements of IEC 60364 as far as possible so that there is compatibility with the wiring rules when the appliance is connected to the supply mains. However, national wiring rules may differ.

If an appliance within the scope of this standard also incorporates functions that are covered by another part 2 of IEC 60335, the relevant part 2 is applied to each function separately, as far as is reasonable. If applicable, the influence of one function on the other is taken into account.

This standard is a product family standard dealing with the safety of appliances and takes precedence over horizontal and generic standards covering the same subject.

An appliance that complies with the text of this standard will not necessarily be considered to comply with the safety principles of the standard if, when examined and tested, it is found to have other features that impair the level of safety covered by these requirements.

An appliance employing materials or having forms of construction differing from those detailed in the requirements of this standard may be examined and tested according to the intent of the requirements and, if found to be substantially equivalent, may be considered to comply with the standard.

--`,,```,,,,````-`-`,,`,,`,`,,`---

Copyright International Electrotechnical Commission
Provided by IHS under license with IEC
No reproduction or networking permitted without license from IHS Not for Resale

HOUSEHOLD AND SIMILAR ELECTRICAL APPLIANCES – SAFETY –

Part 2-50: Particular requirements for commercial electric bains-marie

1 Scope

This clause of Part 1 is replaced by the following.

This International Standard deals with the safety of electrically operated commercial **bains-marie** not intended for household use, their **rated voltage** being not more than 250 V for single-phase appliances connected between one phase and neutral, and 480 V for other appliances.

NOTE 101 These appliances are used, for example in restaurants, canteens, hospitals and similar commercial enterprises.

The electrical part of appliances making use of other forms of energy is also within the scope of this standard.

As far as is practicable, this standard deals with the common hazards presented by these types of appliances.

NOTE 102 Attention is drawn to the fact that

– for appliances intended to be used in vehicles or on board ships or aircraft, additional requirements may be necessary;

– in many countries additional requirements are specified by the national health authorities, the national authorities responsible for the protection of labour, the national water supply authorities and similar authorities;

– for appliances intended to be used outdoors, additional requirements may be necessary.

NOTE 103 This standard does not apply to

– appliances designed exclusively for industrial purposes;

– appliances intended to be used in locations where special conditions prevail, such as the presence of a corrosive or explosive atmosphere (dust, vapour or gas);

– continuous process appliances for the mass production of food.

2 Normative references

This clause of Part 1 is applicable.

3 Definitions

This clause of Part 1 is applicable except as follows.

3.1.4 *Addition:*

NOTE 101 The **rated power input** is the sum of the power inputs of all the individual elements in the appliance that can be on at one time; where there are several such combinations possible, that giving the highest power input is used in determining the **rated power input**.

--`,,```,,,,````-`-`,,`,,`,`,,`---

Copyright International Electrotechnical Commission
Provided by IHS under license with IEC
No reproduction or networking permitted without license from IHS Not for Resale

3.1.9 *Replacement:*

normal operation
operation of the appliance under the following conditions

Open-well and **wet-heat-type bains-marie** are filled with water to the **indicated level** and topped up during the test in accordance with the manufacturer's instructions. The appliance is operated with any control intended to be operated by the user set at maximum. If the water boils, the control is then adjusted to the lowest setting that maintains simmering. No covers or containers are fitted.

Dry-heat-type bains-marie are operated with any controls set at the maximum. Empty food containers are placed in the well but with the container covers removed.

Combined-type appliances are operated under the most unfavourable conditions.

Motors incorporated in the appliance are operated in the intended manner under the most severe conditions that can be expected in normal use taking into account the manufacturer's instructions.

3.101
bain-marie
an appliance with a well that is used for the storage of hot food in containers prior to serving. The containers are indirectly heated by hot air, steam or water in the well

3.102
open-well-type bain-marie
an appliance where the food containers rest in water in a heated well

3.103
wet-heat-type bain-marie
an appliance where the fitted food containers are heated by steam generated within the appliance. The pressure in the well or steam generator does not differ significantly from atmospheric pressure

3.104
dry-heat-type bain-marie
an appliance where the fitted food containers are heated by warm air generated within the appliance

3.105
indicated level
a mark on the appliance to indicate the maximum liquid level for correct operation

3.106
installation wall
a special fixed construction containing supply facilities for appliances installed in conjunction with it

4 General requirement

This clause of Part 1 is applicable.

Copyright International Electrotechnical Commission
Provided by IHS under license with IEC
No reproduction or networking permitted without license from IHS Not for Resale

5 General conditions for the tests

This clause of Part 1 is applicable except as follows.

5.10 *Addition:*

Appliances intended for installation in a bank of other appliances and appliances intended to be fixed to an ***installation wall*** *are enclosed to obtain protection against electric shock and harmful ingress of water equivalent to that obtained when installed in accordance with the instructions provided with the appliance.*

NOTE 101 Appropriate enclosures or additional appliances may be needed for test purposes.

5.101 *Appliances are tested as* ***heating appliances****, even if they incorporate a motor.*

5.102 *Appliances, when assembled in combination with, or incorporating, other appliances, are tested in accordance with the requirements of this standard. The other appliances are operated simultaneously in accordance with the requirements of the relevant standards.*

6 Classification

This clause of Part 1 is applicable except as follows.

6.1 *Replacement:*

Appliances shall be **class I** with respect to protection against electric shock.

Compliance is checked by inspection and by the relevant tests.

6.2 *Addition*:

Appliances normally used on a table shall be at least IPX3. Other appliances shall be at least IPX4.

7 Marking and instructions

This clause of Part 1 is applicable except as follows.

7.1 *Addition:*

In addition, appliances shall be marked with the water pressure or range of pressures, in kilopascals (kPa), for appliances intended to be connected to a water supply, unless this is indicated in the instruction sheet.

7.6 *Addition:*

 [symbol 5021 of IEC 60417-1] equipotentiality

7.12 *Addition:*

If symbol 5021 of IEC 60417-1 is marked on the appliance its meaning shall be explained.

Copyright International Electrotechnical Commission
Provided by IHS under license with IEC
No reproduction or networking permitted without license from IHS Not for Resale

7.12.1 *Replacement:*

The appliance shall be accompanied by instructions detailing any special precautions necessary for installation. For appliances intended for installation in a bank of other appliances and appliances intended to be fixed to an **installation wall,** details of how to ensure appropriate protection against electric shock and harmful ingress of water shall be supplied. If the controls of more than one appliance are combined in a separate enclosure, detailed installation instructions shall be supplied. Instructions for **user maintenance**, for example cleaning, shall also be given. They shall include a statement that the appliance is not to be cleaned with a water jet.

Appliances that are provided with an appliance inlet and are intended to be partially or completely immersed in water for cleaning shall be accompanied by an instruction stating that the connector shall be removed before the appliance is cleaned and that the appliance inlet shall be dried before the appliance is used again.

The instructions of appliances other than stationary appliances and appliances with **detachable electrical parts** that are not intended to be partially or completely immersed in water for cleaning, shall state that the appliance or part must not be immersed.

For appliances that are permanently connected to fixed wiring and for which leakage currents may exceed 10 mA, particularly if disconnected or not used for long periods, or during initial installation, the instructions shall give recommendations regarding the rating of **protective devices**, such as earth leakage relays to be installed.

Compliance is checked by inspection.

7.12.4 *Addition:*

The instructions for **built-in appliances** having a separate control panel for several appliances shall state that the control panel is only to be connected to the specified appliances in order to avoid a possible hazard.

7.15 *Addition:*

When it is not practical to place the marking of **fixed appliances** so that it is visible after the appliance has been installed, the relevant information shall also be included in the instructions for use or on an additional label that can be fixed near the appliance after installation.

NOTE 101 An example of such a **fixed appliance** is a **built-in appliance**.

7.101 Equipotential bonding terminals shall be marked with symbol 5021 of IEC 60417-1.

These markings shall not be placed on screws, removable washers or other parts that can be removed when conductors are being connected.

Compliance is checked by inspection.

7.102 Appliances or the **detachable electrical parts** of appliances intended to be partially immersed in water for cleaning shall be marked with a line that clearly indicates the maximum depth of immersion, together with the substance of the following warning:

Do not immerse beyond this line

If there is any seam or seal that causes the appliance or part not to withstand the treatment specified in 15.102, the line indicating the maximum depth of immersion shall be at least

Copyright International Electrotechnical Commission
Provided by IHS under license with IEC
No reproduction or networking permitted without license from IHS Not for Resale

50 mm below any such seam or seal when the appliance or the part is in the position in which it is to be cleaned.

Compliance is checked by inspection and measurement.

7.103 Appliances intended to be filled by hand or a manually operated tap shall be marked with an **indicated level**.

Compliance is checked by inspection.

8 Protection against access to live parts

This clause of Part 1 is applicable.

9 Starting of motor-operated appliances

This clause of Part 1 is applicable except as follows.

9.101 Fan motors providing a cooling effect in order to comply with the requirements of Clause 11 shall start under all voltage conditions that may occur in use.

*Compliance is checked by starting the motor three times at a voltage equal to 0,85 times **rated voltage**, the motor being at room temperature at the beginning of the test.*

*The motor is started each time under the conditions occurring at the beginning of **normal operation** or, for automatic appliances, at the beginning of the normal cycle of operation, the motor being allowed to come to rest between successive starts. For appliances provided with motors having other than centrifugal starting switches, this test is repeated at a voltage equal to 1,06 times **rated voltage**.*

*In all cases, the motor shall start and it shall function in such a way that safety is not affected, and the overload **protective devices** of the motor shall not operate.*

NOTE The supply source is such that during the test the drop in voltage does not exceed 1 %.

10 Power input and current

This clause of Part 1 is applicable except as follows.

10.1 *Addition:*

NOTE 101 For appliances having more than one heating unit, the total power input may be determined by measuring the power input of each heating unit separately (see also 3.1.4).

11 Heating

This clause of Part 1 is applicable except as follows.

11.2 *Addition:*

Appliances intended to be fixed to the floor and appliances with a mass greater than 40 kg and not provided with rollers, castors or similar means are installed in accordance with the manufacturer's instructions. If no instructions are given, these appliances are considered as appliances normally placed on the floor.

--`,,```,,,,````-`-`,,`,,`,`,,`---
Copyright International Electrotechnical Commission
Provided by IHS under license with IEC
No reproduction or networking permitted without license from IHS Not for Resale

11.4 *Replacement:*

*Appliances are operated under **normal operation** such that the total power input of the appliance is 1,15 times **rated power input**. If it is not possible to switch on all heating elements at the same time, the test is made with each of the combinations that the switch arrangement will allow, the highest load possible with each switching arrangement being in circuit.*

If the appliance is provided with a control that limits the total power input, the test is made with whichever combination of heating units as may be selected by the control imposes the most severe condition.

*If the temperature rise limits of motors, transformers or **electronic circuits** are exceeded, the test is repeated with the appliance supplied at 1,06 times **rated voltage**. In this case, only the temperature rises of motors, transformers or **electronic circuits** are measured.*

11.7 *Replace the test specification paragraph by the following.*

Appliances are operated until steady conditions are established.

NOTE 101 The duration of the test may consist of more than one cycle of operation.

12 Void

13 Leakage current and electric strength at operating temperature

This clause of Part 1 is applicable except as follows.

13.2 *Modification:*

Instead of the permissible leakage current for **stationary class I appliances**, the following applies:

– *for cord and plug connected appliances*	*1 mA per kW **rated power input** of the appliance with a maximum of 10 mA*
– *for other appliances*	*1 mA per kW **rated power input** of the appliance with no maximum*

14 Transient overvoltages

This clause of Part 1 is applicable.

15 Moisture resistance

This clause of Part 1 is applicable except as follows.

15.1 *Addition:*

*Appliances or any **detachable** electrical **parts** intended to be partially or completely immersed in water for cleaning are also subjected to the tests of 15.102.*

NOTE 101 Appliances other than stationary or any **detachable** electrical **parts** not marked with a line indicating the maximum depth of immersion, or for which there is no warning against partial or complete immersion in the instruction sheet, are considered to be appliances intended to be completely immersed in water for cleaning.

Copyright International Electrotechnical Commission
Provided by IHS under license with IEC
No reproduction or networking permitted without license from IHS Not for Resale

15.1.1 *Addition:*

In addition, IPX0, IPX1, IPX2, IPX3 and IPX4 appliances are subjected for 5 min to the following splash test.

The apparatus shown in Figure 101 is used. During the test, the water pressure is regulated so that the water splashes up 150 mm above the bottom of the bowl. The bowl is placed on the floor for appliances normally used on the floor. For all other appliances, on a horizontal support 50 mm below the lowest edge of the appliance, the bowl is moved around in such a way as to splash the appliance from all directions. Care is taken that the appliance is not hit by the direct jet.

15.1.2 *Modification:*

Appliances normally used on a table are placed on a support having dimensions that are 15 cm ± 5 cm in excess of those of the orthogonal projection of the appliance on the support.

15.2 *Replacement:*

Appliances shall be constructed so that spillage of liquid in normal use does not affect their electrical insulation.

Compliance is checked by the following test.

*Appliances with **type X attachment**, except those having a specially prepared cord, are fitted with the lightest permissible type of flexible cable or cord of the smallest cross-sectional area specified in 26.6, and other appliances are tested as delivered.*

Appliances provided with an appliance inlet are tested with or without an appropriate connector in position, whichever is the more unfavourable.

***Detachable parts** are removed.*

The water-well and steam generators of appliances intended to be filled by hand are completely filled with water containing approximately 1 % NaCl and a further quantity equal to 15 % of their capacity but not more than 10 l is poured in steadily over a period of 1 min.

*The food containers of **dry-heat-type bains-marie** are filled with water and placed in the appliance. A further quantity of 1 l is then added to each container.*

Appliances intended to be filled by a manually operated tap or automatically are connected to a water supply having the maximum supply pressure indicated by the manufacturer. The means for controlling the incoming water is held fully open and the filling continued for 1 min after the first evidence of overflow, or until a further protective system operates to stop the inflow.

*The appliance shall then withstand the electric strength test of 16.3 and inspection shall show that there is no trace of water on the insulation that could result in a reduction of **clearances** and **creepage distances** below the values specified in Clause 29.*

15.3 *Addition:*

NOTE 101 If it is not possible to place the whole appliance in the humidity cabinet, parts containing electrical components are tested separately, taking into account the conditions that occur in the appliance.

Copyright International Electrotechnical Commission
Provided by IHS under license with IEC
No reproduction or networking permitted without license from IHS Not for Resale

15.101 Appliances that are provided with a tap intended for filling or cleaning shall be constructed so that the water from the tap cannot come into contact with **live parts**.

Compliance is checked by the following test.

The tap is fully opened for 1 min with the appliance connected to a water supply having the maximum water pressure indicated by the manufacturer. Tiltable and movable parts, including lids, are tilted or placed in the most unfavourable positions. Swivelling outlets of water taps are so positioned as to direct water on to those parts that will give the most unfavourable result. Immediately following this treatment the appliance shall withstand an electric strength test as specified in 16.3.

15.102 Appliances or **detachable** electrical **parts** intended to be partially or completely immersed in water for cleaning shall have adequate protection against the effects of immersion.

Compliance is checked by the following tests.

*The sample is operated under **normal operation**, the supply voltage being such that the power input of the appliance is 1,15 times the **rated power input** until steady conditions are established.*

The connector is then withdrawn or the supply otherwise switched off, and the sample is, if relevant, immediately emptied and then immersed completely in water having a temperature between 10 °C and 25 °C, unless it is marked with a line indicating the maximum depth of immersion, in which case it is immersed to the depth indicated.

After 1 h of immersion, the sample is removed from the water and dried, care being taken to ensure that all moisture is removed from the insulation in the vicinity of the pins of appliance inlets. The leakage current is then measured on the assembled appliance, as described in 16.2.

The leakage current shall not exceed the value specified in 16.2.

After the treatment described above and the measurement of the leakage current, the sample shall withstand an electric strength test as specified in 16.3, the test voltage being, however, reduced to 1 000 V.

The sample is then operated as above for 10 days (240 h). During this period, the sample is allowed to cool down to approximately room temperature five times at regular intervals.

After this period, the connector of the sample is withdrawn or the supply otherwise switched off, and the sample immediately emptied and immersed once more in water for 1 h as described above. It is then dried and the leakage current is measured again as described in 16.2.

The leakage current shall not exceed the value specified in 16.2.

The sample shall then withstand an electric strength test as specified before, and inspection shall show that water has not entered the appliance to any appreciable extent.

NOTE When inspecting the appliance for the presence of water, special attention is paid to parts of the appliance in which electrical components are situated.

--`,,```,,,,````-`-`,,`,,`,`,,`---

Copyright International Electrotechnical Commission
Provided by IHS under license with IEC
No reproduction or networking permitted without license from IHS Not for Resale

16 Leakage current and electric strength

This clause of Part 1 is applicable except as follows.

16.2 *Modification:*

Instead of the permissible leakage current for **stationary class I appliances**, the following applies:

– *for cord and plug connected appliances*	*1 mA per kW **rated power input** of the appliance with a maximum of 10 mA*
– *for other appliances*	*1 mA per kW **rated power input** of the appliance with no maximum*

Addition:

NOTE 101 For appliances intended to be used with a connector and intended to be partially or completely immersed in water for cleaning, the appliance inlet may be dried, for example by means of blotting paper, before applying the test voltage if the appliance would not otherwise withstand this test.

17 Overload protection of transformers and associated circuits

This clause of Part 1 is applicable.

18 Endurance

This clause of Part 1 is applicable.

19 Abnormal operation

This clause of Part 1 is applicable except as follows.

19.1 *Addition:*

A control or switching device that is intended for different settings corresponding to different functions of the same part of the appliance and that are covered by different standards is, in addition, set in the most severe setting, irrespective of the manufacturer's instructions.

19.2 *Addition:*

Appliances are tested without water and those intended to be automatically filled are tested with the water supply turned off.

19.4 *Addition:*

NOTE 101 The main contacts of the contactor intended for switching on and off the heating element(s) in normal use are locked in the "ON" position. However, if two contactors operate independently of each other or if one contactor operates two independent sets of main contacts, these contacts are locked in the "ON" position in turn.

20 Stability and mechanical hazards

This clause of Part 1 is applicable except as follows.

Copyright International Electrotechnical Commission
Provided by IHS under license with IEC
No reproduction or networking permitted without license from IHS Not for Resale

20.1 *Addition:*

Movable parts, including lids, are placed in the most unfavourable position.

NOTE 101 Any spillage of liquid is ignored.

21 Mechanical strength

This clause of Part 1 is applicable.

22 Construction

This clause of Part 1 is applicable except as follows.

22.15 *Addition:*

Appliances intended to transport food or other loads shall be provided with a suitable means to protect the **supply cord** from damage during transportation.

22.101 For 3-phase appliances, **thermal cut-out** protecting circuits with heating elements, and those for motors of which the unexpected starting may cause a hazard, shall be of the non-self-resetting, trip-free type and shall provide **all-pole disconnection** from related supply circuits.

For single-phase appliances and for single-phase heating elements and/or motors connected between one phase and neutral or between phase and phase, thermal cut-out protecting circuits with heating elements, and those for motors of which the unexpected starting may cause a hazard, shall be of the non-self-resetting trip-free type and shall provide at least one-pole disconnection.

If the **non-self-resetting thermal cut-out** is only accessible after removing parts with the aid of a **tool**, the trip-free type is not required.

NOTE 1 **Thermal cut-outs** of the trip-free type have an automatic action, with a reset actuating member, so constructed that the automatic action is independent of manipulation or position of the reset mechanism.

Thermal cut-outs of the bulb and capillary type that operate during the tests of Clause 19 shall be such that rupture of the capillary tube shall not impair compliance with the requirements of 19.13.

Compliance is checked by inspection and by manual test, and by rupturing the capillary tube.

NOTE 2 Care must be taken to ensure that the rupture does not seal the capillary tube.

22.102 Lights, switches or push-buttons shall only be coloured red for the indication of danger, alarm or similar situations.

Compliance is checked by inspection.

22.103 Appliances fitted with wheels or similar means shall be provided with an efficient means of locking while the appliance is stationary.

Compliance is checked by inspection and by the following test.

The appliance is fully loaded in accordance with the manufacturer's instructions. If no instructions are provided, the containers delivered with the appliance are completely filled with water. If no containers are supplied, suitable containers are used for the test.

Copyright International Electrotechnical Commission
Provided by IHS under license with IEC
No reproduction or networking permitted without license from IHS Not for Resale

The appliance, fully loaded in accordance with the manufacturer's instructions, is placed on a rigid plane coated with aluminium oxide paper (grain size 80) and inclined at 10° to the horizontal, with the locking mechanism applied. The appliance shall not move by more than 100 mm.

22.104 Drain cocks and other emptying devices for hot liquids shall be constructed so that they cannot be opened inadvertently. Moreover, it shall not be possible to withdraw drain plugs inadvertently.

Compliance is checked by inspection and by manual test.

NOTE For example, this requirement is met when the valve handle is such that, when released, it returns automatically to the closed position, or is of the wheel type or placed in a recess.

22.105 Means provided to allow drainage of water from **bain-marie** wells or steam generators shall discharge the water in such a manner that electrical insulation is not affected.

Compliance is checked by inspection and by manual test.

22.106 The level to which manually filled appliances have to be filled shall be so located as to be readily visible when filling.

Compliance is checked by inspection.

22.107 **Portable appliances** shall not have openings on the underside that would allow small items to penetrate and touch **live parts**.

*Compliance is checked by inspection and by measuring the distance between the supporting surface and **live parts** through openings. This distance shall be at least 6 mm. However, if the appliance is fitted with legs, this distance is increased to 10 mm if the appliance is intended to stand on the table and to 20 mm if it is intended to stand on the floor.*

23 Internal wiring

This clause of Part 1 is applicable except as follows.

23.3 *Addition:*

*When the capillary tube of the **thermostat** is liable to flexing in normal use the following applies:*

- *where the capillary tube is fitted as part of the internal wiring, Part 1 applies;*
- *where the capillary tube is separate, it shall be subjected to 1 000 flexings at a rate not exceeding 30 per minute.*

NOTE 101 If, in any of the above cases, it is not possible to move the movable part of the appliance at the given rate, due for example to the mass of the part, the rate of flexing may be reduced.

After the test, the capillary tube shall show no sign of damage within the meaning of this standard and no damage impairing its further use.

However, if a rupture of the capillary tube renders the appliance inoperative (fail-safe), separate capillary tubes are not tested, and those fitted as part of the internal wiring are not inspected for compliance with the requirements.

Copyright International Electrotechnical Commission
Provided by IHS under license with IEC
No reproduction or networking permitted without license from IHS Not for Resale

Compliance in this instance is checked by rupturing the capillary tube.

NOTE 102 Care must be taken to ensure that the rupture does not seal the capillary tube.

24 Components

This clause of Part 1 is applicable except as follows.

24.101 Connectors fitted to appliances shall not incorporate a **thermostat**.

Compliance is checked by inspection.

25 Supply connection and external flexible cords

This clause of Part 1 is applicable except as follows.

25.3 *Addition:*

Fixed appliances and appliances with a mass greater than 40 kg and not provided with rollers, castors or similar means shall be constructed so that the **supply cord** can be connected after the appliance has been installed in accordance with the manufacturer's instructions.

Terminals for permanent connection of cables to fixed wiring may also be suitable for the **type X attachment** of a **supply cord**. In this case a cord anchorage complying with 25.16 shall be fitted to the appliance.

If the appliance is provided with a set of terminals allowing the connection of a flexible cord, they shall be suitable for the **type X attachment** of the cord.

In both cases the instructions shall give full particulars of the power **supply cord**.

The connection to the supply wires of **built-in appliances** may be made before the appliance is installed.

Compliance is checked by inspection.

25.7 *Modification:*

*Instead of the types of **supply cords** specified, the following applies.*

Supply cords shall be oil-resistant, sheathed flexible cable not lighter than ordinary polychloroprene or other equivalent synthetic elastomer-sheathed cord (code designation 60245 IEC 57).

26 Terminals for external conductors

This clause of Part 1 is applicable.

27 Provision for earthing

This clause of Part 1 is applicable except as follows.

Copyright International Electrotechnical Commission
Provided by IHS under license with IEC
No reproduction or networking permitted without license from IHS Not for Resale

27.2 *Addition:*

Stationary appliances shall be provided with a terminal for the connection of an external equipotential conductor. This terminal shall be in effective electrical contact with all fixed exposed metal parts of the appliance, and shall allow the connection of a conductor having a nominal cross-sectional area of up to 10 mm^2. It shall be located in a position convenient for the connection of the bonding conductor after installation of the appliance.

NOTE 101 Small fixed exposed metal parts, for example nameplates and the like, are not required to be in electrical contact with the terminal.

28 Screws and connections

This clause of Part 1 is applicable.

29 Clearances, creepage distances and solid insulation

This clause of Part 1 is applicable except as follows.

29.2 *Addition:*

The microenvironment is pollution degree 3 and the insulation shall have a comparative tracking index (CTI) not less than 250, unless the insulation is enclosed or located so that it is unlikely to be exposed to pollution during normal use of the appliance.

30 Resistance to heat and fire

This clause of Part 1 is applicable except as follows.

30.2.1 *Modification:*

The glow-wire test is carried out at 650 °C.

30.2.2 Not applicable.

31 Resistance to rusting

This clause of Part 1 is applicable.

32 Radiation, toxicity and similar hazards

This clause of Part 1 is applicable.

Copyright International Electrotechnical Commission
Provided by IHS under license with IEC
No reproduction or networking permitted without license from IHS Not for Resale

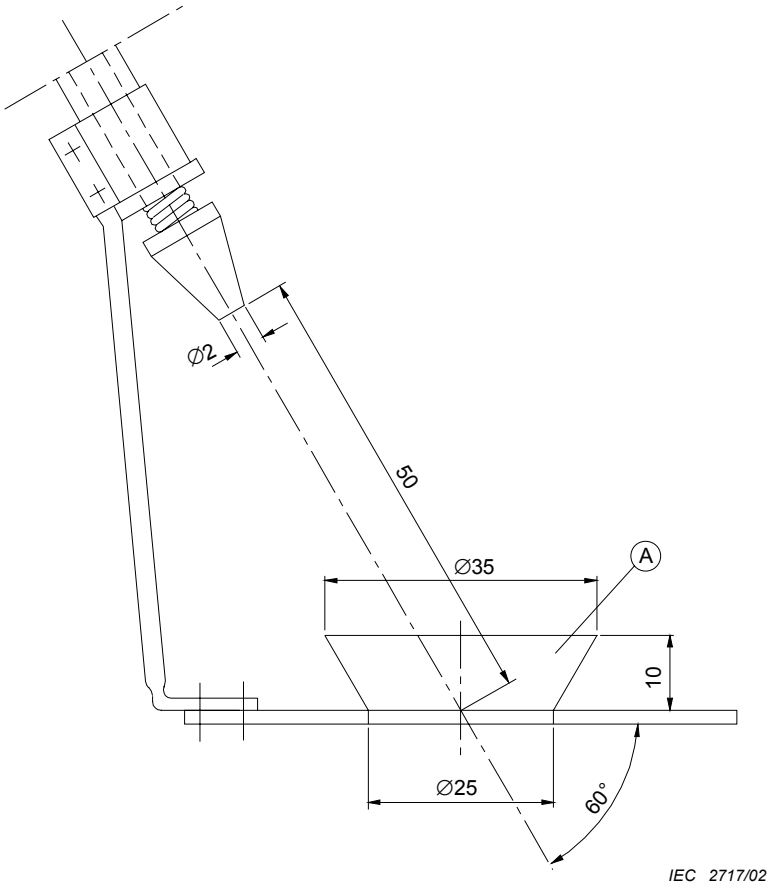

Dimensions in millimetres

Key

A Bowl

Figure 101 – Splash apparatus

Copyright International Electrotechnical Commission
Provided by IHS under license with IEC
No reproduction or networking permitted without license from IHS Not for Resale

Annexes

The annexes of Part 1 are applicable except as follows.

Annex N
(normative)

Proof tracking test

6.3 *Addition:*

Add 250 V to the list of specified voltages.

Bibliography

The bibliography of Part 1 is applicable.

_____

Copyright International Electrotechnical Commission
Provided by IHS under license with IEC
No reproduction or networking permitted without license from IHS Not for Resale

--`,,```,,,,````-`-`,,`,,`,`,,`---

Copyright International Electrotechnical Commission
Provided by IHS under license with IEC
No reproduction or networking permitted without license from IHS Not for Resale

INTERNATIONAL
ELECTROTECHNICAL
COMMISSION

3, rue de Varembé
P.O. Box 131
CH-1211 Geneva 20
Switzerland

Tel: + 41 22 919 02 11
Fax: + 41 22 919 03 00
info@iec.ch
www.iec.ch

--`,,```,,,,````-`-`,,`,,`,`,,`---

Copyright International Electrotechnical Commission
Provided by IHS under license with IEC
No reproduction or networking permitted without license from IHS

Not for Resale