INTERNATIONAL STANDARD

IEC 60268-4

Third edition
2004-02

Sound system equipment –

Part 4: Microphones



Reference number
IEC 60268-4:2004(E)

Copyright International Electrotechnical Commission
Provided by IHS under license with IEC
No reproduction or networking permitted without license from IHS
Not for Resale

Publication numbering

As from 1 January 1997 all IEC publications are issued with a designation in the 60000 series. For example, IEC 34-1 is now referred to as IEC 60034-1.

Consolidated editions

The IEC is now publishing consolidated versions of its publications. For example, edition numbers 1.0, 1.1 and 1.2 refer, respectively, to the base publication, the base publication incorporating amendment 1 and the base publication incorporating amendments 1 and 2.

Further information on IEC publications

The technical content of IEC publications is kept under constant review by the IEC, thus ensuring that the content reflects current technology. Information relating to this publication, including its validity, is available in the IEC Catalogue of publications (see below) in addition to new editions, amendments and corrigenda. Information on the subjects under consideration and work in progress undertaken by the technical committee which has prepared this publication, as well as the list of publications issued, is also available from the following:

- **IEC Web Site (www.iec.ch)**

- **Catalogue of IEC publications**

  The on-line catalogue on the IEC web site (http://www.iec.ch/searchpub/cur_fut.htm) enables you to search by a variety of criteria including text searches, technical committees and date of publication. On-line information is also available on recently issued publications, withdrawn and replaced publications, as well as corrigenda.

- **IEC Just Published**

  This summary of recently issued publications (http://www.iec.ch/online_news/justpub/jp_entry.htm) is also available by email. Please contact the Customer Service Centre (see below) for further information.

- **Customer Service Centre**

  If you have any questions regarding this publication or need further assistance, please contact the Customer Service Centre:

  Email: custserv@iec.ch
  Tel: +41 22 919 02 11
  Fax: +41 22 919 03 00

--`,,```-`-`,,`,,`,`,,`---

Copyright International Electrotechnical Commission
Provided by IHS under license with IEC
No reproduction or networking permitted without license from IHS Not for Resale

INTERNATIONAL STANDARD

IEC 60268-4

Third edition
2004-02

Sound system equipment –

Part 4: Microphones

© IEC 2004 — Copyright - all rights reserved

No part of this publication may be reproduced or utilized in any form or by any means, electronic or mechanical, including photocopying and microfilm, without permission in writing from the publisher.

International Electrotechnical Commission, 3, rue de Varembé, PO Box 131, CH-1211 Geneva 20, Switzerland
Telephone: +41 22 919 02 11 Telefax: +41 22 919 03 00 E-mail: inmail@iec.ch Web: www.iec.ch

Commission Electrotechnique Internationale
International Electrotechnical Commission
Международная Электротехническая Комиссия

PRICE CODE X

For price, see current catalogue

Copyright International Electrotechnical Commission
Provided by IHS under license with IEC
No reproduction or networking permitted without license from IHS

Not for Resale

CONTENTS

FOREWORD 5
1 Scope 7
2 Normative references 7
3 General conditions 8
3.1 General 8
3.2 Measurement conditions 8
4 Particular conditions 9
4.1 Pre-conditioning 9
4.2 Sound source 10
4.3 Measurement of sound pressure 10
4.4 Voltage measuring system 10
4.5 Acoustical environment 10
4.6 Methods of measuring frequency response 13
4.7 Overall accuracy 14
4.8 Graphical presentation of results 14
5 Type description (acoustical behaviour) 14
5.1 Principle of the transducer 14
5.2 Type of microphone 14
5.3 Type of directional response characteristics 14
6 Terminals and controls 15
6.1 Marking 15
6.2 Connectors and electrical interface values 15
7 Reference point and axis 15
7.1 Reference point 15
7.2 Reference axis 15
8 Rated power supply 15
8.1 Characteristic to be specified 15
8.2 Method of measurement 16
9 Electrical impedance 16
9.1 Internal impedance 16
9.2 Rated impedance 17
9.3 Minimum permitted load impedance 17
10 Sensitivity 17
10.1 General 17
10.2 Sensitivities with respect to acoustical environment 18
10.3 Sensitivities with respect to nature of signal 20
11 Response 21
11.1 Frequency response 21
11.2 Effective frequency range 21
12 Directional characteristics 22
12.1 Directional pattern 22
12.2 Directivity index 23
12.3 Front-to-rear sensitivity index (0° – 180°) 23
12.4 Noise-cancelling index 24
12.5 Special characteristics for stereo microphones 24

Copyright International Electrotechnical Commission
Provided by IHS under license with IEC
No reproduction or networking permitted without license from IHS Not for Resale

13 Amplitude non-linearity 25
13.1 General 25
13.2 Total harmonic distortion 26
13.3 Harmonic distortion of the nth order (n = 2, 3,...) 26
13.4 Difference frequency distortion of second order 27
14 Limiting characteristics 28
14.1 Rated maximum permissible peak sound pressure 28
14.2 Overload sound pressure 28
15 Balance 28
15.1 Balance of the microphone output 28
15.2 Balance under working conditions 28
16 Equivalent sound pressure level due to inherent noise 29
16.1 Characteristic to be specified 29
16.2 Method of measurement 29
17 Ambient conditions 29
17.1 General 29
17.2 Pressure range 29
17.3 Temperature range 29
17.4 Relative humidity range 29
18 External influences 30
18.1 General 30
18.2 Equivalent sound pressure due to external magnetic fields 30
18.3 Equivalent sound pressure due to mechanical vibration 31
18.4 Equivalent sound pressure due to wind 32
18.5 Transient equivalent sound pressure due to "pop" effect 33
18.6 Equivalent sound pressure due to electromagnetic interference 34
18.7 Electrostatic discharge 34
19 Magnetic stray field 34
19.1 Characteristic to be specified 34
19.2 Method of measurement 35
20 Physical characteristics 35
20.1 Dimensions 35
20.2 Weight 35
20.3 Cables and connectors 35
21 Classification of the characteristics to be specified 35
21.1 General 35
21.2 Classification 36

Annex A (normative) Sound insulation device 41
Annex B (informative) Simplified procedure for “pop” measurements 42

Bibliography 45

Figure 1a – Balance of the output 37
Figure 1b – Balance under working conditions 37
Figure 2 – Measurement set-up for wind influence 37
Figure 3a – Wind generator with radial fan (front and side view) 38

Copyright International Electrotechnical Commission
Provided by IHS under license with IEC
No reproduction or networking permitted without license from IHS Not for Resale

Figure 3b – Wind generator with axial fan 38
Figure 4 – Electrical and mechanical set-up for the measuring of the "pop" effect 39
Figure 5 – Reference signal and characteristics 40
Figure A.1 – Sound insulation device 41
Figure B.1 – Measurement set-up 43
Figure B.2 – Test fixture for the sound field sensitivity 44

Table 1 – Reverberation time of the empty room 12
Table 2 – Speech power weighting factor at octave-band centre frequencies 20
Table 3 – Classification of characteristics 36

Copyright International Electrotechnical Commission
Provided by IHS under license with IEC
No reproduction or networking permitted without license from IHS Not for Resale

INTERNATIONAL ELECTROTECHNICAL COMMISSION

SOUND SYSTEM EQUIPMENT –

Part 4: Microphones

FOREWORD

1) The International Electrotechnical Commission (IEC) is a worldwide organization for standardization comprising all national electrotechnical committees (IEC National Committees). The object of IEC is to promote international co-operation on all questions concerning standardization in the electrical and electronic fields. To this end and in addition to other activities, IEC publishes International Standards, Technical Specifications, Technical Reports, Publicly Available Specifications (PAS) and Guides (hereafter referred to as "IEC Publication(s)"). Their preparation is entrusted to technical committees; any IEC National Committee interested in the subject dealt with may participate in this preparatory work. International, governmental and non-governmental organizations liaising with the IEC also participate in this preparation. IEC collaborates closely with the International Organization for Standardization (ISO) in accordance with conditions determined by agreement between the two organizations.
2) The formal decisions or agreements of IEC on technical matters express, as nearly as possible, an international consensus of opinion on the relevant subjects since each technical committee has representation from all interested IEC National Committees.
3) IEC Publications have the form of recommendations for international use and are accepted by IEC National Committees in that sense. While all reasonable efforts are made to ensure that the technical content of IEC Publications is accurate, IEC cannot be held responsible for the way in which they are used or for any misinterpretation by any end user.
4) In order to promote international uniformity, IEC National Committees undertake to apply IEC Publications transparently to the maximum extent possible in their national and regional publications. Any divergence between any IEC Publication and the corresponding national or regional publication shall be clearly indicated in the latter.
5) IEC provides no marking procedure to indicate its approval and cannot be rendered responsible for any equipment declared to be in conformity with an IEC Publication.
6) All users should ensure that they have the latest edition of this publication.
7) No liability shall attach to IEC or its directors, employees, servants or agents including individual experts and members of its technical committees and IEC National Committees for any personal injury, property damage or other damage of any nature whatsoever, whether direct or indirect, or for costs (including legal fees) and expenses arising out of the publication, use of, or reliance upon, this IEC Publication or any other IEC Publications.
8) Attention is drawn to the Normative references cited in this publication. Use of the referenced publications is indispensable for the correct application of this publication.
9) Attention is drawn to the possibility that some of the elements of this IEC Publication may be the subject of patent rights. IEC shall not be held responsible for identifying any or all such patent rights.

International Standard IEC 60268-4 has been prepared by IEC Technical Committee 100: Audio, video and multimedia systems and equipment.

This third edition cancels and replaces the second edition published in 1997, and constitutes a technical revision.

The text of this standard is based on the following documents:

FDIS	Report on voting
100/721/FDIS	100/750/RVD

Full information on the voting for the approval of this standard can be found in the report on voting indicated in the above table.

This publication has been drafted in accordance with the ISO/IEC Directives, Part 2.

Copyright International Electrotechnical Commission
Provided by IHS under license with IEC
No reproduction or networking permitted without license from IHS Not for Resale

The committee has decided that the contents of this publication will remain unchanged until 2008. At this date, the publication will be

- reconfirmed;
- withdrawn;
- replaced by a revised edition, or
- amended.

--`,,```-`-`,,`,,`,`,,`---

Copyright International Electrotechnical Commission
Provided by IHS under license with IEC
No reproduction or networking permitted without license from IHS Not for Resale

SOUND SYSTEM EQUIPMENT –

Part 4: Microphones

1 Scope

This part of IEC 60268 specifies methods of measurement for the electrical impedance, sensitivity, directional response pattern, dynamic range and external influences of sound system microphones, and also gives recommendations as to characteristics to be specified.

It applies to sound system microphones for all applications for speech and music. It does not apply to measurement microphones, but it does apply to each audio channel of microphones having more than one channel, for example for stereo or similar use. It is also applicable to flush-mounted microphones and to the analogue characteristics of microphones with digital audio output.

For the purposes of this International Standard, a microphone includes all such devices as transformers, pre-amplifiers, or other elements that form an integral part of the microphone, up to the output terminals specified by the manufacturer.

NOTE The characteristics specified in this standard do not completely describe the subjective response of the microphone. Further work is necessary to find new definitions and measurement procedures for a later replacement by objective characteristics of at least some of the subjective descriptions use to describe microphone performance.

2 Normative references

The following referenced documents are indispensable for the application of this document. For dated references, only the edition cited applies. For undated references, the latest edition of the referenced document (including any amendments) applies.

IEC 60065:2001*, Audio, video and similar electronic apparatus – Safety requirements*

IEC 60268-1:1985, *Sound system equipment – Part 1: General*

IEC 60268-2:1987, *Sound system equipment – Part 2: Explanation of general terms and calculation methods*

IEC 60268-3:2000, *Sound system equipment – Part 3: Amplifiers*

IEC 60268-5:2003, *Sound system equipment – Part 5: Loudspeakers*

IEC 60268-11:1987, *Sound system equipment – Part 11: Application of connectors for the interconnection of sound system components*

IEC 60268-12:1987, *Sound system equipment – Part 12: Application of connectors for broadcast and similar use*

IEC 60574-3:1983, *Audiovisual, video and television equipment and systems – Part 3: Connectors for the interconnection of equipment in audiovisual systems*

IEC 60914:1988, *Conference systems – Electrical and audio requirements*

--`,,```-`-`,,`,,`,`,,`---

Copyright International Electrotechnical Commission
Provided by IHS under license with IEC
No reproduction or networking permitted without license from IHS Not for Resale

IEC 61000-4-2:1995, *Electromagnetic compatibility (EMC) – Part 4-2: Testing and measurement techniques – Electrostatic discharge immunity test*

IEC 61000-4-3:2002, *Electromagnetic compatibility (EMC) – Part 4: Testing and measurement techniques – Section 3: Radiated, radio-frequency, electromagnetic field immunity test*

IEC 61265:1995, *Electroacoustics – Instruments for measurement of aircraft noise – Performance requirements for systems to measure one-third-octave-band sound pressure levels in noise certification of transport-category aeroplanes*

IEC 61938:1996, *Audio, video and audiovisual systems – Interconnections and matching values – Preferred matching values of analogue signals*

ISO 354:2003, *Acoustics – Measurement of sound absorption coefficients in a reverberant room*

3 General conditions

3.1 General

Special reference is made to IEC 60268-1, concerning:

- units and system of measurement;
- frequencies of measurement;
- quantities to be specified and their accuracy (see also 4.7);
- marking (see also 6.1);
- ambient conditions;
- filters, networks and measuring instruments for noise specification and measurement;
- individual specifications and type specifications;
- graphical presentation of characteristics;
- scales for graphical presentation;
- personal safety and prevention of spread of fire;
- method of producing a uniform alternating magnetic field;
- search coils for measuring the magnetic field strength,

and to IEC 61938 concerning powering of microphones.

3.2 Measurement conditions

3.2.1 Introduction

For convenience in specifying how microphones shall be set up for measurement, a set of conditions has been defined in this recommendation under the title of "rated conditions".

Three ratings are basic to the formulation of these concepts:

– rated impedance (see 9.2);
– rated power supply (see 8.1);
– rated sensitivity (see 10.3.1).

To obtain the correct conditions for measurement, the above mentioned ratings shall be taken from the specifications supplied by the manufacturer of the equipment.

--`,,```-`-`,,`,,`,`,,`---
Copyright International Electrotechnical Commission
Provided by IHS under license with IEC
No reproduction or networking permitted without license from IHS Not for Resale

The term "rated" applied to other characteristics relates to the specification or measurement of the particular characteristic under rated conditions or under conditions unambiguously connected to them. This applies, for example, to the following two characteristics:

– rated output voltage;

– rated equivalent sound pressure level due to inherent noise.

Methods of measurement are given in this standard for electrical impedance, sensitivity, directional pattern, dynamic range and external influences. Where alternative methods are given, the chosen method shall be specified.

3.2.2 Rated conditions

The microphone is understood to be working under rated conditions when the following conditions are fulfilled:

– the microphone shall operate at no-load condition (see 9.2);

– if the microphone needs a power supply, this shall be the rated power supply;

– the microphone (except a close-talking microphone) shall be placed in a free sound field, the waves having zero degree incidence with respect to the reference direction;

– the undisturbed sound pressure (in the absence of the microphone) in the sound field at the reference point of the microphone shall be sinusoidal and set at a level of 0,3 Pa (84 dB SPL)

– for close-talking microphones, the microphone shall be placed at a stated distance, no more than 25 mm from the artificial mouth, and the undisturbed sound pressure in the sound field at the reference point of microphone shall be sinusoidal and set at a level of 3 Pa (104 dB SPL).

– if a special microphone needs a different measurement level, this shall be stated in the technical data together with the reason for this. Levels related to the normal reference level of 94 dB by multiples of 10 dB are preferred;

– controls, if any, shall be set to the position recommended by the manufacturer;

– in the absence of a clear reason to the contrary, the measurement frequency shall be 1000 Hz (see IEC 60268-1);

– the ambient pressure, the relative humidity and the ambient temperature shall be within the limits given in IEC 60268-1, and shall be stated.

NOTE 1 The ITU/T has published Recommendation P.51 which includes the specification of an artificial mouth. An artificial mouth conforming to that Recommendation should be used wherever possible.

NOTE 2 An artificial voice which emits a signal simulating that emitted by noise should be used for measuring pressure-gradient close-talking microphones to ensure that nasal sounds are adequately reproduced. The absence of such sounds in the reproduction may give rise to unnatural speech quality.

NOTE 3 Limitations of the measurement site or the measurement equipment may also require the use of other than the given measurement sound pressure levels. This is acceptable only if any change in performance between the level used and the reference level are known with the necessary accuracy for the relevant characteristics.

4 Particular conditions

4.1 Pre-conditioning

A microphone with preamplifier shall be switched on for the period of time specified by the manufacturer, before measurements are made, to allow the components to reach the stationary temperature for rated conditions. If the manufacturer specifies no period, a period of 10 s shall be allowed for stabilization. If the microphone contains a vacuum tube or other heating device the time shall be 10 min.

Copyright International Electrotechnical Commission
Provided by IHS under license with IEC
No reproduction or networking permitted without license from IHS Not for Resale

4.2 Sound source

The sound source shall be capable of producing at the microphone position the sound pressure level as defined for rated conditions. The amplitude non-linearity of the sound source shall be held to such a value that the effect on the measured response does not exceed 0,5 dB. If the conditions of measurement preclude the possibility of securing sufficiently low distortion, a narrow-band filter may be used at the microphone output terminals, which allows the response at the fundamental frequency to be measured.

For free-field calibration and calibration of performance microphones, the sound source shall be contained in an enclosure which radiates sound from one well-defined opening only, and such an opening shall be radially symmetrical with respect to the axis of the reference direction of the microphone.

4.3 Measurement of sound pressure

A calibrated reference pressure microphone shall be used to measure the sound pressure. The reference microphone should be calibrated with an accuracy of ±1 dB or better.

4.4 Voltage measuring system

The electromotive force (e.m.f.) generated by the microphone, when in a sound field, shall be determined by measuring the open-circuit voltage of the microphone using a voltmeter with an input impedance of at least 100 times the rated impedance of the microphone.

NOTE If external equipment, such as a power supply, places a load on the microphone, the true e.m.f. should be calculated by correcting for the effect of this load.

4.5 Acoustical environment

4.5.1 General

The microphone can be measured in different acoustical environments:

a) in a free field or similar without boundaries:
   - spherical waves, or
   - plane waves, or
   - waves produced by a specific sound source (artificial mouth or artificial head);

b) in a diffuse field;

c) coupled to a sound source by means of a small cavity (coupler).

4.5.2 Free-field conditions

A free-field sound wave is normally divergent in character. In certain circumstances it can approximate an ideal plane wave.

Free-field conditions can be obtained:

- in open air, ambient noise and wind permitting, or
- in an anechoic room, or
- in a duct.

A sound source of small dimensions with respect to the wavelength produces a spherical wave in these environments. The spherical wave can be approximated to a plane wave in a region of measurement located at a sufficient distance from the source. Spherical waves can be used to measure pressure microphones but it is necessary to use almost perfect plane waves in the low frequency range for the measurement of pressure gradient microphones.

Copyright International Electrotechnical Commission
Provided by IHS under license with IEC
No reproduction or networking permitted without license from IHS Not for Resale

For microphones responding both to pressure and to pressure gradient, having a sufficiently flat frequency response in a plane-wave free sound field (i.e. at a sufficient distance from the source), the response as a function of frequency f of distance r from a centre of spherical diverging waves and of angle of incidence θ of the waves at the microphone, can be given in a complex form:

$$(1-B)+B\left(1+\frac{1}{\mathrm{j}kr}\right)\cos\theta$$

where:

$1–B$ is the contribution of the pressure component;

B is the contribution of the pressure gradient component;

k = $2\pi/\lambda$ or $2\pi f/v$;

B = 0 for the omnidirectional pressure type;

B = 0,5 for the cardioid type;

B = 1 for the bidirectional pressure gradient type.

At low frequencies, it becomes difficult to realize plane wave conditions in an anechoic room. A plane wave at low frequencies, below the cut-off frequency of the anechoic room, can therefore be better produced under other conditions.

Free-field conditions are considered to be sufficiently realized in the region around the microphone if the following conditions are met:

– within a distance of 200 mm in front, behind, right, left, above and below the position of the microphone the sound pressure level is measured at every measuring frequency by means of a pressure transducer;
– the axis of the transducer shall point towards the reference point of the loudspeaker (see IEC 60268-5);
– the corresponding sound pressure levels on axis positioned at different distances from the loudspeaker shall not differ by more than 0,5 dB from the calculated levels in the ideal sound field;
– the values at a nearly constant distance, right, left, above and below the microphone shall not differ by more than 1 dB from the level at the reference point of the microphone.

4.5.2.1 Spherical waves

The sound pressure generated in a free field by an omnidirectional sound source varies inversely with the distance from the acoustic centre of the sources.

The output voltage of the microphone varies inversely with the distance between the source and the microphone when the relevant dimensions of both are small compared with the wavelength, allowing the results from the measurements made at a certain distance r to be converted by calculation to results which would be obtained at the reference distance.

When either the circumference of the radiating surface of the source or the circumference of the principal acoustic entry of the microphone exceeds the wavelength, this computation applies only when the measuring distance conforms to:

$$r \geq d$$

$$r \geq d^2 / \lambda$$

Copyright International Electrotechnical Commission
Provided by IHS under license with IEC
No reproduction or networking permitted without license from IHS Not for Resale

where

r is the distance from the source to the measuring point;

d is the effective diameter of the sound source;

λ is the sound wavelength.

NOTE It is advisable for the distance from the source to the measuring point to exceed three times the largest dimension of the radiating surface of the source.

4.5.2.2 Plane progressive waves

A plane progressive wave can be obtained either in a duct or in a free field.

a) In a duct

In designing a duct capable of producing useful results, there are many problems to be solved such as the design of the terminating impedance, the avoidance of cross-modes, the shape of the original wavefront and the relative dimensions of the duct and the microphone.

b) In a free field

A spherical wave at a distance of at least half the wavelength from the centre of curvature at the lowest frequency of measurement is a practical approximation to a plane progressive wave.

NOTE It should be understood that for measurement of "shotgun" types and pressure zone microphones, determining the smallest permitted distance is complicated and no exact rules can be given. Therefore, in these cases the measuring distance used should be stated.

4.5.2.3 Use of an artificial mouth

In order that the conditions of test may be similar to those of actual use, it is necessary to introduce an obstacle in the shape of a human head when measuring close-talking microphones by means of an artificial mouth (see note to 3.2.2).

4.5.3 Diffuse field conditions

Some measurements can be made in a diffuse field in which sound waves are propagated with random incidence. In this case, bands of noise of third-octave width or broadband signals together with suitable filtering shall be used.

A diffuse sound field can be approximately realized in a reverberant room characterized by a sufficiently long duration of reverberation at a sufficiently large distance from the source and the walls, and above a limiting frequency (see also ISO 354).

The reverberation time T of the empty room is specified in Table 1.

Table 1 – Reverberation time of the empty room

T >	5 s	5 s	5 s	4,5 s	3,5 s	2 s
at	125 Hz	250 Hz	500 Hz	1 000 Hz	2 000 Hz	4 000 Hz

For the determination of the lower frequency limit, the following equation can be used:

$$f \geq \frac{500}{V^{1/3}}$$

where

V is the volume of the room in cubic metres;

f is the frequency in hertz.

Copyright International Electrotechnical Commission
Provided by IHS under license with IEC
No reproduction or networking permitted without license from IHS Not for Resale

The region of measurement shall be chosen at such a distance from the source that the direct sound of the source is negligible.

When an omnidirectional source is used, the minimum distance r (in metres) from the source to the measuring points is given by:

$$r \geq 0{,}06(V/T)^{1/2}$$

where

V is the volume of the room in cubic metres;

T is the Sabine reverberation time at the frequency f.

NOTE The preceding two formulae allow wider tolerance than those of the first edition of this standard. Though this is unlikely to change the measurement results significantly, it is recommended to avoid the lower limits as far as possible.

4.5.4 Microphone coupled to a sound source by means of a small cavity coupler

To determine the pressure sensitivity of a microphone, a rigid cavity is used to couple the sound source to the microphone. This method is useful for obtaining the pressure sensitivity of a microphone by comparison with the sensitivity of a calibrated reference microphone. In order to obtain a sufficiently uniform sound pressure inside the cavity, this method shall only be used within the limits of the frequency range where the linear dimensions of the cavity are less than one-tenth of the wavelength. At low frequencies care shall be taken to eliminate air leakage.

4.6 Methods of measuring frequency response

4.6.1 Point-by-point and continuous sweep frequency methods

Response curves may be prepared point-by-point or automatically.

a) Point-by-point method

Great care shall be taken to ensure that all significant peaks and troughs of the frequency response curve are explored.

NOTE The graph should clearly indicate the measurement points.

b) Continuous sweep frequency method

The rate of traversing the frequency range shall be slow enough to ensure that the resulting curve does not deviate from that which would be obtained under steady state conditions.

NOTE 1 Stopping the trace at any instant should not change the indicated response by more than ±1 dB.

NOTE 2 The following additional apparatus may be used:

– equipment capable of automatically maintaining the requisite sound pressure level over the frequency range concerned;

– an automatic level recorder as output indicator.

c) Special computer-based signals and procedures

Several computer algorithms are available to generate signals and to evaluate responses in the time domain, as well as in the frequency domain. Some of them are just digital procedures that replace their analogue ancestors, such as the Fast Fourier Transform for spectral analysis. Other algorithms provide new types of test signals and responses. Most of them are applicable if the user takes care of their inherent limitations and preconditions. In cases where existing specified procedures are replaced by new ones for the evaluation of the same characteristic, the user has to ensure that the result is at least as accurate as with the old procedure. New techniques are considered for standardization when basic matters of background and their relationship to known properties have been determined.

Copyright International Electrotechnical Commission
Provided by IHS under license with IEC
No reproduction or networking permitted without license from IHS Not for Resale

4.6.2 Calibration methods

Irrespective of the choice of the point-by-point or automatic method, there are two methods of conducting the calibration.

a) Substitution method

A method of measurement of the response of a microphone in which the microphone to be calibrated and the standard microphone employed to measure the requisite sound pressure are placed alternately at the same test points in the sound field.

This method leads to the highest accuracy.

b) Simultaneous comparison method

For reasons of convenience an alternative method for measuring the response of a microphone is sometimes employed in which the microphone to be calibrated and the standard microphone employed to measure the requisite sound pressure are placed simultaneously at two different points normally not widely separated. Care shall be taken that one microphone is not placed at a more favourable point in the sound field than the other. The points chosen shall be such that the results of a response test carried out by the comparison method agree within ±1 dB with the corresponding results obtained by the substitution method.

The simultaneous method shall be used only after checking that this requirement is met. Compliance with this requirement can be checked by the following:

– the sound pressures, measured at the two different points in the free sound field by means of a calibrated microphone, shall correspond within ±1 dB;
– the distance between the microphones shall be such that the sound pressure at each of the two microphone points is independent within ±1 dB of the presence of the second microphone at the other point.

4.7 Overall accuracy

An overall accuracy of ±2 dB or better shall be obtained for the calibration of all types of microphones.

4.8 Graphical presentation of results

The graphical presentation of measurement results should follow the recommendations of IEC 60268-1.

5 Type description (acoustical behaviour)

5.1 Principle of the transducer

The manufacturer shall specify the principle of the transducer, for example electrostatic (condenser), electrodynamic, electromagnetic or piezoelectric.

5.2 Type of microphone

The manufacturer shall specify the type of microphone, for example pressure, pressure-gradient (with acoustical phase shift network, if any), or combination of a pressure and pressure-gradient microphone, or velocity microphone.

5.3 Type of directional response characteristics

The manufacturer shall specify the type of directional response characteristics of the microphone, for example omnidirectional, unidirectional, bidirectional, (sphere, cardioid, hypercardioid, hemisphere or half-cardioid of revolution, etc.).

--`,,```-`-`,,`,,`,`,,`---
Copyright International Electrotechnical Commission
Provided by IHS under license with IEC
No reproduction or networking permitted without license from IHS Not for Resale

6 Terminals and controls

6.1 Marking

Recommendations for marking the terminals and controls are given in IEC 60268-1, clause 5 and IEC 61938, 7.4.4 and 7.5.5, with the addition of the following requirement, if the microphone conforms to the requirements of IEC 61938, clause 7:

The polarity shall be indicated by a mark, preferably a coloured dot or a connector pin number designated in the instruction manual, at that output terminal at which a positive instantaneous voltage is produced by an inward movement of the diaphragm or equivalent, that is an increase in sound pressure at the principal entry. Marking for safety shall be in accordance with IEC 60065 or other appropriate safety standard.

Marking of the polarity is recommended if the microphone conforms to the requirements of IEC 61938. However, it is a requirement of this standard if it does not.

6.2 Connectors and electrical interface values

Connectors and their wiring shall be in accordance with IEC 60268-11 or IEC 60268-12. Interface values (voltages and impedances) shall be in accordance with IEC 61938.

7 Reference point and axis

7.1 Reference point

In the absence of clear reason to the contrary, the reference point shall be the centre of the principal sound entry. Otherwise it should be stated.

NOTE In order to allow unambiguous specification of the reference point, reference axis and polarity, the manufacturer should designate a principal sound entry even for a bidirectional microphone.

7.2 Reference axis

The reference axis is a line passing through the reference point indicating a recommended direction of sound incidence specified by the manufacturer. The microphone shall be so designed that the recommended direction of sound incidence is obvious to the user.

NOTE The reference axis should preferably be perpendicular to the plane of the principal acoustic entry of the microphone and should pass through the centre of the entry.

8 Rated power supply

8.1 Characteristic to be specified

The following information shall be specified by the manufacturer for each pair of microphone terminals to be connected to the power supply and for each position of the power supply adaptor, if any:

– the type of power supply (phantom, A-B, etc.; see IEC 61938);
– power supply voltage and its upper and lower limits;
– apparent current drawn from the power supply, expressed in amperes;
– for multi-voltage microphones, the voltage-current characteristic.

--`,,```,,,,````-`-`,,`,,`,`,,`---

Copyright International Electrotechnical Commission
Provided by IHS under license with IEC
No reproduction or networking permitted without license from IHS Not for Resale

8.2 Method of measurement

a) The microphone is operated under rated conditions.

b) The current drawn from the power supply is measured in amperes.

9 Electrical impedance

9.1 Internal impedance

9.1.1 Characteristic to be specified

The modulus of the internal impedance of the microphone measured between the output terminals.

NOTE If the impedance can be satisfactorily represented by that of a simple network, the values of the network components may be given. If this is not applicable, the impedance should be specified as a function of frequency.

9.1.2 Methods of measurement

The internal impedance may be measured by the comparison method or by applying a sound pressure and measuring the output voltage under different load conditions. Both methods are indicated below.

a) Method 1

The impedance can be measured by means of a measuring bridge. An alternative method is that of comparison with a known impedance. In the latter case a constant current from a high impedance source is passed through the microphone and the voltage across its terminals is measured.

The microphone is then replaced by a known resistance and the procedure repeated. Comparison of the two values gives the modulus of the impedance directly.

The voltage applied at the microphone terminals shall not exceed the output voltage generated by the microphone at the overload sound pressure level.

NOTE 1 If only one value is measured, the internal impedance should be specified at 1 000 Hz.

NOTE 2 The capacitance of a condenser microphone cartridge should be measured when supplied with the polarization voltage specified by the manufacturer.

b) Method 2

The internal impedance can also be computed from the output voltages occurring under three different conditions of load. Generally speaking, this procedure requires very accurate measuring apparatus.

If the internal impedance is approximately a pure resistance, the following simple procedure may be used to obtain approximate results which are sufficiently accurate for normal practice:

– the microphone is operated under measurement conditions;

– sound pressure is applied to the microphone and the impedance is deduced from the output voltage obtained for different loads. For example, the impedance Z may be calculated from the no-load output voltage U'_2 and the output U_2 obtained when a load impedance R_2 is applied by using the formula:

$$Z = \frac{U'_2 - U_2}{U_2} R_2$$

Copyright International Electrotechnical Commission
Provided by IHS under license with IEC
No reproduction or networking permitted without license from IHS Not for Resale

9.2 Rated impedance

The rated impedance is the internal impedance of the microphone specified by the manufacturer.

Unless otherwise specified, microphones shall be designed for no-load operating conditions and shall be used with loads not below the minimum permitted load impedance. In practice, values high compared with the source impedance, have been chosen as recommended rated load impedances in IEC 61938, 7.1.

NOTE 1 The recommendations of IEC 61938 are based on the assumption that a value of 5 times the source impedance approximates the no-load conditions sufficiently for most cases. However, this load may cause the output voltage level to be 1,6 dB below the source e.m.f.

NOTE 2 Unless otherwise specified, the impedance is understood to be a pure resistance.

9.3 Minimum permitted load impedance

The minimum permitted load impedance is the minimum impedance, as specified by the manufacturer, by which the microphone may be terminated (see 9.2).

NOTE From their design, most microphones may perform best under no-load conditions. The minimum permitted load impedance is a compromise leading to negligible differences in performance.

10 Sensitivity

10.1 General

The sensitivity is the ratio of the output voltage of the microphone to the sound pressure to which it is exposed. For no-load conditions the value of the output voltage is identical with the output e.m.f. (see 9.2).

The sensitivity M is expressed in volts per Pascal.

NOTE Normally the ratio gives a complex value, but usually only the amplitudes (with sinusoidal signal) are considered.

The sensitivity level L_{M}, is the ratio, expressed in decibels, of the sensitivity M to the reference sensitivity M_{r}.

$$L_m = 20 \lg \frac{M}{M_{\mathrm{r}}}$$

The reference sensitivity is M_{r} = 1 V/Pa

The following types of sensitivity may be specified:

– free-field sensitivity (see 10.2.1) referring to the sound pressure of the undisturbed free field (in the absence of the microphone);

– pressure sensitivity (see 10.2.4) referring to the actual sound pressure at the principal acoustic entrance of the microphone;

– diffuse-field sensitivity (see 10.2.2) referring to the sound pressure of the undisturbed diffuse field;

– close-talking sensitivity (see 10.2.3) referring to the sound pressure of the undisturbed field at a specified short distance from the human (artificial) mouth.

These types of sensitivity may be given, if appropriate, either at specified frequencies, within a specified frequency band, for octave/third-octave bands, or for complex signal inputs. In the latter case, the characteristics of the signal and the measuring system shall be specified.

Copyright International Electrotechnical Commission
Provided by IHS under license with IEC
No reproduction or networking permitted without license from IHS Not for Resale

Definition and figures for the sensitivity of microphones should be related to the purpose for which the microphones are used.

10.2 Sensitivities with respect to acoustical environment

10.2.1 Free-field sensitivity

10.2.1.1 Characteristic to be specified

At a specific frequency or within a specified frequency band and for a specified direction of sound incidence with respect to the reference axis, the ratio of the output e.m.f. to the sound pressure in the undisturbed free field.

NOTE Unless otherwise specified, the undisturbed free field should be a plane progressive wave with the wavefront perpendicular to the reference axis of the microphone.

10.2.1.2 Method of measurement

The conditions for measurement are specified in Clauses 3 and 4.

A free-field calibration of the standard microphone employed to measure the sound pressure is required.

NOTE 1 It is important to ensure that the orientation of the standard microphone agrees with the orientation used during its calibration.

NOTE 2 For omnidirectional microphones (pressure type only), the free-field sensitivity in a plane-wave and that in a spherical wave do not differ from each other, and are equal to the pressure sensitivity, provided that diffraction effects in the field can be neglected. This is the case when the lateral dimensions of the microphone are small compared to the wavelength. At low frequencies, therefore, a spherical wave is sufficient to measure the plane-wave sensitivity of an omnidirectional microphone (pressure type only). At very low frequencies, free-field sensitivity and pressure sensitivity can be different due to the effect of a pressure equalization vent. For the higher frequency range, the microphone should be measured in the relevant sound field. If a cone loudspeaker with a diameter not larger than 0,3 m is used as a sound source, a suitable minimum distance for the free-field calibration of omnidirectional microphones (pressure type only) in the audio frequency range is 1 m.

10.2.2 Diffuse-field sensitivity

10.2.2.1 Characteristic to be specified

At a specified frequency or within a specified frequency band, the ratio of the output e.m.f. to the sound pressure in the undisturbed diffuse field. The diffuse-field sensitivity is equal to the r.m.s. value of the free-field sensitivities for all directions of sound incidence. The diffuse-field sensitivity level equals the free-field plane-wave sensitivity level (see 10.2.1) minus the directivity index (see 12.2).

NOTE 1 The diffuse-field is characterized by the fact that sound waves with random phase are randomly distributed over all directions (random incidence).

NOTE 2 Instead of the diffuse field sensitivity, the manufacturer may state the free-field plane-wave sensitivity and the front-to-random sensitivity index at the same frequency or within the same frequency band.

10.2.2.2 Methods of measurement

The diffuse-field sensitivity can be obtained in two different ways:

a) The diffuse-field sensitivity for a given frequency can be calculated from the free-field sensitivity (see 10.2.1) and the directional pattern (see 12.1) of the microphone in a plane progressive wave.

   If the directional pattern has rotational symmetry the relationship between the diffuse-field sensitivity and the sensitivities at other angles of incidence θ is:

$$M_{\mathrm{diff}}^2 = \frac{1}{2}\int_0^{\pi} M^2(\theta)\sin\theta \,\mathrm{d}\theta$$

Copyright International Electrotechnical Commission
Provided by IHS under license with IEC
No reproduction or networking permitted without license from IHS Not for Resale

NOTE Modern computation algorithms allow easy calculation of the integral to any desired accuracy, thus allowing the replacement of earlier proposals for calculation with fixed steps every 30°.

b) The diffuse-field sensitivity for a band of frequencies can be measured in a reverberant room if the conditions laid down in Clauses 3 and 4 are fulfilled. An omnidirectional sound source should preferably be used. A diffuse-field calibration of the standard microphone employed to measure the sound pressure is required.

10.2.3 Close-talking sensitivity

10.2.3.1 Characteristic to be specified

At a specified frequency or within a specified frequency band, the ratio of the output e.m.f. to the sound pressure in the undisturbed sound field produced by a special source. This source shall simulate the human head and mouth (artificial mouth) and the reference point of the microphone shall be placed at a stated distance from the reference point of the source, the reference axis of the microphone being in a stated orientation with respect to the reference axis of the source. This definition is relevant only for microphones used close to the mouth, i.e. at a distance not exceeding 50 mm.

10.2.3.2 Method of measurement

The general conditions for the measurements are laid down in Clauses 3 and 4. An artificial mouth is used as sound source (see 3.2.2, Note 1). The distance between the reference point of the source and the reference point of the microphone shall be 25 mm and should be stated together with the orientation of the reference axis.

A close-talking calibration of the standard microphone employed to measure the sound pressure is required.

It is important that the orientation of the standard microphone shall be in accordance with the orientation used at the calibration laboratory.

Unless otherwise specified, the diameter of the mouth opening shall be 20 mm.

10.2.4 Pressure sensitivity

10.2.4.1 Characteristic to be specified

At a specified frequency or within a specified frequency band, the ratio of the output e.m.f. to the actual sound pressure at the acoustic entry of the microphone. This definition is relevant only to microphones with one sound entry.

NOTE The amplitude and phase of the sound pressure should be kept constant over the sound entry.

10.2.4.2 Method of measurement

The pressure sensitivity can be measured in a small chamber (coupler, sound calibrator). The calibrator produces the sound pressure by means of an oscillating piston. For the exact calculation of the sound pressure the equivalent volume of the microphone shall be added to the coupler volume. The upper frequency limit with this calibration is determined by the dimensions of the pressure chamber. The pressure sensitivity can be derived from the microphone output voltage with known sound pressure in the chamber.

Condenser microphones can be measured by exciting the diaphragm with an electrostatic actuator designed for use with the microphone being measured. The grid of the actuator carries a d.c. voltage on which is superimposed the audio-frequency test voltage. Without the d.c. voltage, the microphone output signal is at twice the frequency of the test voltage.

--`,,```,,,,````-`-`,,`,,`,`,,`---

Copyright International Electrotechnical Commission
Provided by IHS under license with IEC
No reproduction or networking permitted without license from IHS Not for Resale

10.3 Sensitivities with respect to nature of signal

10.3.1 Rated sensitivity

10.3.1.1 Characteristics to be specified

The free-field, diffuse-field, close-talking, or pressure sensitivities assigned by the manufacturer.

The rated sensitivity corresponds to the response at the standard reference frequency of 1 000 Hz. If the frequency response is not flat, it is recommended that the rated sensitivity corresponds to the arithmetic average over a one-octave band of the logarithmically plotted response, centred on the standard reference frequency of 1 000 Hz.

NOTE Unless otherwise specified, the rated sensitivity is understood to refer to the microphone under no-load conditions. The manufacturer may specify the rated sensitivity for a specified load impedance (see 9.2).

10.3.2 Characteristic sensitivity for speech

10.3.2.1 Characteristic to be specified

The modulus of the relevant sensitivity of the microphone (see 10.2) averaged over the effective frequency range using a weighting which corresponds to a specified speech power spectrum.

NOTE The characteristic sensitivity for speech is intended to provide the information necessary for matching the microphone to the amplifier, taking into account both the frequency response of the microphone and an approximated speech power spectrum. This definition takes account of the fact that the major part of speech power is concentrated in the low-frequency range and also that, generally, microphones for speech transmission have a low-frequency roll-off. The characteristic sensitivity for speech bears no relation to an intelligibility rating.

10.3.2.2 Method of measurement

Average values of the relevant sensitivity selected from 10.2 are calculated for the octave frequency bands (in accordance with IEC 61265) with centre-frequencies 250 Hz, 500 Hz, 1 000 Hz and 2 000 Hz.

These four average values $(M_{\mathrm{f}})_k$ can be calculated from the value at one frequency (e.g. 1 000 Hz) and from the frequency response measured under the relevant conditions, averaged on a decibel scale within each of the octave-bands.

The characteristic sensitivity for speech power shall be calculated from the expression

$$M_{\mathrm{es}} = \left[\sum_{k=1}^{4} \alpha_k \left(M_{\mathrm{f}}\right)_k^2 \right]^{1/2}$$

where

k is the index of the octave-band considered (k = 1....4);

α_k is the speech-power weighting factor for the octave-band with index k given in Table 2.

Table 2 – Speech power weighting factor at octave-band centre frequencies

Index k	1	2	3	4
Centre-frequency of octave-band (Hz)	250	500	1 000	2 000
Speech-power weighting factor, α_k	0,15	0,55	0,20	0,10

Copyright International Electrotechnical Commission
Provided by IHS under license with IEC
No reproduction or networking permitted without license from IHS Not for Resale

The characteristic sensitivity level for speech power L_{Mcs} is the ratio, expressed in decibels, of the characteristic sensitivity for speech power M_{cs} and the reference sensitivity M_r (= 1 V/Pa) expressed as follows:

$$L_{Mcs} = 20 \lg \frac{M_{cs}}{M_r}$$

NOTE The procedure given above involves several simplifications, but gives sufficient accuracy for normal practice. A more accurate method of weighting can be obtained by using a more extended frequency range, true power-averaging in narrower frequency-bands (e.g. third-octave bands) and the appropriate speech-power weighting factors for each of the narrower frequency-bands. However, it should be borne in mind that any set of speech-power weighting factors to be used as a basis for calculation are averages for different languages and different male and female voices, and the deviations for individual persons readily exceed the limits of accuracy of the simplified procedure given above.

11 Response

11.1 Frequency response

11.1.1 Characteristic to be specified

For stated conditions, the ratio, expressed in decibels, of the output e.m.f. as a function of frequency of a sinusoidal signal to the output e.m.f. at a stated frequency (or to the mean output e.m.f. over a narrow band of frequencies) at a constant sound pressure and stated angle of incidence.

Unless otherwise stated, it shall be understood that free-field conditions apply and that the frequency response refers to a plane progressive wave with the wavefront perpendicular to the reference axis of the microphone.

If free-field conditions apply but the sound field is not a plane progressive wave, sufficient further details shall be specified.

If the frequency response is given for a specified source (artificial mouth), the close-talking frequency response shall refer to the same source and to the same geometrical configuration of source and microphone as those for the specification of close-talking sensitivity (see 10.2.3).

Sound pressure frequency response or diffuse-field frequency response may be given if indicated as such.

11.1.2 Method of measurement

The general conditions for obtaining frequency response curves are specified in clauses 3 and 4.

11.2 Effective frequency range

11.2.1 Characteristic to be specified

The frequency range over which the response of the microphone does not deviate by more than a specified amount from an "ideal" response for the given purpose.

NOTE The "ideal" response may not be constant with respect to frequency. From artistic considerations, this may even apply to microphones of the highest quality. For speech-only microphones, the "ideal" response may be chosen to achieve maximum intelligibility.

11.2.2 Method of measurement

For specified deviations relative to the specified required frequency response curve, the effective frequency range is obtained from the curve referred to in 11.1.2.

--`,,```-`-`,,`,,`,`,,`---

Copyright International Electrotechnical Commission
Provided by IHS under license with IEC
No reproduction or networking permitted without license from IHS Not for Resale

12 Directional characteristics

12.1 Directional pattern

12.1.1 Characteristic to be specified

Curve representing the free-field sensitivity level of the microphone as a function of the angle of incidence of the sound wave, for a stated frequency or narrow band of frequencies.

If the directional pattern refers to spherical sound waves then sufficient details shall be specified. Directional curves shall be provided at a sufficient number of frequencies or bands of frequencies in order to present adequately the frequency dependence of the directional pattern. The bands of frequencies shall be the preferred octave or third-octave bands of frequencies specified in IEC 61265.

NOTE It is often useful to specify particularly the ratio, in decibels, of the response at certain specified angles (see for example 12.3) to the response on axis.

12.1.2 Methods of measurement

The general conditions for measurement are specified in Clauses 3 and 4. The microphone shall be placed in an essentially plane progressive wave (see 4.5.2). Care shall be taken when measuring the directional characteristic of a highly directional microphone in an anechoic room. The inevitable reflections from the boundaries of the room can influence the measured sensitivity, particularly when the output e.m.f. of the microphone is measured for an angle of sound incidence for which the sensitivity is low. In order to obtain correct results for microphones of large dimensions it may be necessary to measure these in the open air (see 4.5.2).

The measurement can be carried out in two different ways:

a) Directional response pattern:
   1) the microphone is operated under rated conditions;
   2) the distance between the reference point of the sound source and the reference point of the microphone is kept constant during the measurement;
   3) the sound pressure is kept constant during the measurement;
   4) the frequency is kept constant during the measurement;
   5) the angle θ of sound incidence, measured with respect to the microphone reference axis, is varied continuously or step by step including the angle zero; for the step-by-step method the angle of sound incidence is varied in steps of 10° or 15°;
   6) for each angle θ the corresponding output voltage $U(\theta)$ is measured or recorded;
   7) the ratio of the sensitivity of the microphone at the angle θ to the sensitivity at the angle zero is expressed as direct:

$$\frac{U(\theta)}{U(0)}$$

   or in decibels:

$$20\log_{10}\frac{U(\theta)}{U(0)}$$

   8) the measurement is repeated for a number of frequencies, preferred frequencies being the octave centre-frequencies 125 Hz, 250 Hz, 500 Hz, 1 000 Hz, 2 000 Hz, 4 000 Hz, 8 000 Hz and 16 000 Hz;

--`,,```-`-`,,`,,`,`,,`---

Copyright International Electrotechnical Commission
Provided by IHS under license with IEC
No reproduction or networking permitted without license from IHS Not for Resale

9) if the microphone has no rotational symmetry, measurements of the directional characteristic in different planes through the reference axis of the microphone can be necessary;

10) the results shall be presented as a family of polar response curves for the frequencies given under item 8). The polar response curves shall be drawn in accordance with IEC 60268-1. The origin of the polar characteristic of the directional pattern shall be the reference point of the microphone. Unless otherwise specified, the reference axis of the microphone shall be in the direction zero degree of the polar diagrams;

b) Directional frequency characteristic:

1) the microphone is operated under rated conditions;

2) the angle of sound incidence θ, measured with respect to the microphone reference axis, is kept constant during the measurement;

3) the distance between the reference point of the sound source and the reference point of the microphone is kept constant during the measurement;

4) the sound pressure is kept constant during the measurement;

5) the output voltage $U(\theta)$ of the microphone is measured as a function of the frequency for a number of discrete angles of sound incidence θ, including the angle zero;

6) the results shall be presented as a family of frequency response curves for the various angles of incidence θ with respect to the reference axis;

7) from these curves, it is possible to derive the ratio of the sensitivity of the microphone at the angle θ to the sensitivity at the angle zero for a specific frequency (polar curve (see 12.1.2 a)).

12.2 Directivity index

12.2.1 Characteristic to be specified

The ratio, expressed in decibels, of the output e.m.f. produced by plane sound waves arriving in the direction of the reference axis, to the output e.m.f. produced by diffuse sound field having the same frequency or frequency band and r.m.s. sound pressure. The frequency or frequency band shall be stated.

12.2.2 Method of measurement

The directivity index is given by

$$20 \lg \frac{M_0}{M_{\text{diff}}}$$

where

M_0 is the free-field sensitivity specified in 10.2.1;

M_{diff} is the diffuse-field sensitivity specified in 10.2.2.

12.3 Front-to-rear sensitivity index (0° – 180°)

12.3.1 Characteristic to be specified

The ratio, expressed in decibels, of the free-field plane wave sensitivities for incidence of identical sound waves in the direction of the reference axis and in the opposite direction. The frequency or frequency band shall be stated.

--`,,```-`-`,,`,,`,`,,`---
Copyright International Electrotechnical Commission
Provided by IHS under license with IEC
No reproduction or networking permitted without license from IHS Not for Resale

12.3.2 Method of measurement

The front-to-rear sensitivity index is derived from the measured free-field plane wave sensitivities (see 10.2.1) for incidence of identical sound waves in the direction of the reference axis and in the opposite direction.

NOTE Care should be taken when measuring the front-to-rear sensitivity index of a highly directional microphone in an anechoic room because of the influence of sound reflections from the boundaries (see 12.1).

12.4 Noise-cancelling index

12.4.1 Characteristic to be specified

For close-talking noise cancelling microphones, the ratio, expressed in decibels, of the output e.m.f. produced by sound waves emanating from a specified source (artificial mouth) placed at a stated distance from the microphone, with a stated orientation with respect to the reference axis of the microphone, to the output e.m.f. produced by a diffuse sound field having the same frequency or frequency band and the same r.m.s. sound pressure. The frequency or frequency band shall be stated.

The noise-cancelling index shall be understood to be equal to the ratio, expressed in decibels, of the close-talking sensitivity (see 10.2.3) and the diffuse-field sensitivity (see 10.2.2) at the same frequency or within the same frequency band. In all cases the sound source used shall be stated.

The noise-cancelling index shall refer to the same source and to the same geometrical configuration of source and microphone as those for the specification of the close-talking sensitivity (see 10.2.3).

NOTE 1 The noise-cancelling index may be presented as frequency response curves for both the specified source and the diffuse sound field.

NOTE 2 Instead of an artificial mouth, an artificial head can be used.

12.4.2 Method of measurement

The noise-cancelling index is computed as the ratio, expressed in decibels, of the measured close-talking sensitivity (see 10.2.3) and the measured or calculated diffuse-field sensitivity (see 10.2.2).

It is presented either as a function of frequency within the effective frequency range, or as the frequency response curves for both the specified source (artificial mouth) and the diffuse sound field at the same sound pressure.

12.5 Special characteristics for stereo microphones

12.5.1 General

For stereophonic recording, special microphone units with fixed transducer arrangements for both audio channels are in use, as well as a multitude of well-defined arrangements (arrays) of monophonic microphones. The following characteristics apply to these microphones and arrays

12.5.2 Included angle of an XY (left-right) microphone

12.5.2.1 Characteristic to be specified

The angle between the reference axis of the left-channel microphone and that of the right channel microphone.

--`,,```-`-`,,`,,`,`,,`---

Copyright International Electrotechnical Commission
Provided by IHS under license with IEC
No reproduction or networking permitted without license from IHS Not for Resale

12.5.2.2 Method of measurement

Usually both microphones have the same directional properties and the reference and mechanical axes are the same, so that the angle can be derived from the mechanical design. In case of doubt, directivity measurements for both channels should be made, following the procedure for monophonic microphones.

12.5.3 Acceptance angle

12.5.3.1 Characteristic to be specified

The angle between the directions of maximum ratio between right and left channel (X/Y and Y/X).

12.5.3.2 Method of measurement

The angle can be derived from directional response plots for left and right output, using the same zero reference direction. This may require the use of an MS to XY converter.

NOTE The angle depends on the frequency, so that preferred frequencies have to be chosen.

12.5.4 Threshold angle

12.5.4.1 Characteristic to be specified

The angle between the directions of sound which lead to a localization of the apparent sound source at one of the loudspeakers, as observed by a listener sitting on the middle axis, when the microphone signals are reproduced through correctly set up stereophonic loudspeakers.

Generally, the necessary level ratio for this effect is within 15 dB to 18 dB.

12.5.4.2 Method of measurement

A small sound source, preferably producing a pink noise signal, is moved slowly along a circular arc centred on the microphone position, in anechoic conditions. The microphone signals are reproduced through a correctly set up stereophonic replay system. An observer reports the occurrence of localization of the sound at one of the loudspeaker positions, and the operator records the position of the sound source. The test is repeated for localization at the other loudspeaker position. The angle subtended at the microphone position by the two recorded positions is determined and reported as the result. A note should be made of any asymmetry of this angle with respect to the reference axis of the microphone(s).

13 Amplitude non-linearity

13.1 General

A general explanation on amplitude non-linearity can be found in IEC 60268-2.

The characteristics to be specified and the methods of measurement of various types of amplitude non-linearity which may be of importance for microphones can be found in 13.2 to 13.4.

Copyright International Electrotechnical Commission
Provided by IHS under license with IEC
No reproduction or networking permitted without license from IHS Not for Resale

13.2 Total harmonic distortion

13.2.1 Characteristics to be specified

Harmonic distortion is one manifestation of amplitude non-linearity. In simple cases, it may be possible to generate sound fields with lower distortion than that of the microphones at moderate sound pressure levels. The distortion shall be measured under fixed conditions of bandwidth and level specified for different applications (see IEC 60914, 17.2). If the sound field distortion cannot be kept small enough compared to the microphone non-linearity, other methods, for example difference frequency distortion, (see 13.4) shall be used.

13.2.2 Method of measurement

The general conditions specified in clauses 3 and 4 shall be established.

A selective voltmeter, such as a wave analyzer, preceded if necessary by a high-pass filter which suppresses the fundamental frequency, is connected to the output of the microphone under test. The measuring device shall indicate the true r.m.s. value of the harmonic remainder.

The voltage of each of the separate harmonics U_{nf} is measured.

The total voltage U_{t}, including the fundamental frequency, is measured by a wide band r.m.s. meter connected to the microphone under test.

The total harmonic distortion can be determined by the formulae:

in percentage:

$$d_{\mathrm{t}} = \frac{\sqrt{u^2_{2\mathrm{f}} + u^2_{3\mathrm{f}} + \ldots + u^2_{nf}}}{u_{\mathrm{t}}} \times 100\%$$

in decibels:

$$L_{\mathrm{dt}} = 20 \lg\left(\frac{d_{\mathrm{t}}}{100}\right)$$

NOTE The non-linearity distortion of the sound field in which the microphone under test is placed should be much less than the distortion of the microphone itself (see 13.2.1).

13.3 Harmonic distortion of the nth order (n = 2,3,...)

13.3.1 Characteristic to be specified

The harmonic distortion of the nth order, expressed in terms of the total voltage.

13.3.2 Method of measurement

The general conditions specified in Clauses 3 and 4 shall be established. A selective voltmeter, such as a wave analyzer, preceded if necessary by a high-pass filter which suppresses the fundamental frequency, is connected to the output of the microphone under test. The measuring device shall indicate the true r.m.s. value of the harmonic remainder.

The voltage of the separate harmonics U_{nf} is measured.

The total voltage, including the fundamental frequency, U_{t} is measured by a wide band r.m.s. meter connected to the microphone under test.

Copyright International Electrotechnical Commission
Provided by IHS under license with IEC
No reproduction or networking permitted without license from IHS Not for Resale

The harmonic distortion of the nth order can be determined by the formulae

in percentage

$$d_n = \frac{u_{nf}}{u_t} \times 100\,\%$$

in decibels

$$L_{dn} = 20 \lg\left(\frac{d_n}{100}\right) \text{ dB}$$

The non-linearity distortion of the sound field in which the microphone under test is placed shall be much less than the distortion of the microphone itself (see 13.2.1).

NOTE See note to 13.2.

13.4 Difference frequency distortion of second order

13.4.1 Characteristic to be specified

The ratio of the signal of frequency f_d = 80 Hz at the output of the microphone when placed in a sound field consisting of two sinusoidal signals of frequencies f_1 and f_2, such that $f_2 - f_1$ = 80 Hz, selected with an appropriate selective filter, to the signal voltage at the input of the selective filter (see IEC 60268-2, 7.2).

13.4.2 Method of measurement

The measurements are made with two sound sources, one of which radiates the signal of frequency f_1, and the other of frequency $f_2 = f_1 \pm 80$ Hz.

The sound pressure levels produced by each of the sound sources at the reference point of the microphone shall be the same.

The method of measurement shall follow the procedure described in IEC 60268-3, 14.12.8. The result is given by

in percentage

$$d_{fd} = \frac{U_{fd}}{2U_{ref}} \times 100\,\%$$

in decibels

$$L_{fd} = 20 \lg \frac{d_{fd}}{100} \text{ dB}$$

with U_{ref} as the geometric mean of U_{f1} and U_{f2}

where

– U_{f1} is the voltage of frequency f_1 at the output of the microphone produced by the sound pressure from the first sound source;

– U_{f2} as for U_{f1}, but for the voltage of frequency f_2;

– U_{fd} is the voltage at the output of the microphone of frequency $f_d = f_2 - f_1$ = 80 Hz.

NOTE The distance between the reference points of the sound sources and the microphone under test is chosen so as to produce the required sound pressure levels at the microphone.

Copyright International Electrotechnical Commission
Provided by IHS under license with IEC
No reproduction or networking permitted without license from IHS Not for Resale

14 Limiting characteristics

14.1 Rated maximum permissible peak sound pressure

The maximum instantaneous sound pressure of a plane sound wave, specified by the manufacturer, that the microphone can tolerate without a permanent change of its performance characteristics, for any direction of sound incidence.

NOTE This characteristic includes the word "rated" because it has to be specified by the manufacturer as a result of a series of tests, and cannot be reliably measured in one sample (see IEC 60268-2).

14.2 Overload sound pressure

14.2.1 Characteristic to be specified

The maximum sound pressure of a plane sound wave at which the amplitude non-linearity of the microphone does not exceed a specified limit, for any frequency within the effective frequency range and for any direction of sound incidence.

NOTE No common limits have yet been defined, however many data sheets refer to values of 0,5 or 1% for difference frequency distortion (14.2.2)

14.2.2 Method of measurement

The microphone is brought under rated conditions and the overload sound pressure is then measured for different angles of sound incidence by increasing the sound pressure of a pure sinusoidal sound until the distortion at the output of the microphone reaches a specified value. The sound pressure shall be stated for the angle of incidence for which maximum distortion occurs.

NOTE Nonlinearities of the sound sources and of the air may limit the procedure. Difference frequency measurements as specified in 13.4.2 at least minimize the influence of loudspeaker nonlinearities.

15 Balance

15.1 Balance of the microphone output

Figure 1a shows the measurement set-up in accordance with IEC 60268-2. Further reference is made to IEC 60268-3, 14.15. All requirements for balance of source and meter are also valid for microphone measurements. The load resistor shall have a value of 200 Ω. The source impedance of the test signal U'_2 shall be 50 Ω. The balance of the measurement device itself shall be tested without the microphone by replacing it by a 200 Ω resistor. The "balance" in decibels is calculated by

$$20 \lg \frac{U_2}{U'_2} \text{ (see Figure 1a)}$$

NOTE The external sound level should be kept as low as possible in order not to influence the results.

15.2 Balance under working conditions

The procedure specified in 15.1 does not cover interference picked up via the output lead. With a modification of the setup in accordance with Figure 1a, the corresponding voltage U_2 can be measured (see Figure 1b).

To get comparable conditions for different mechanical designs of microphones, the test shall be made including 1,5 m of high quality cable and with an output load of 1 kΩ.

NOTE A separate measurement of the cable verifies that its contribution to the result is negligible.

Copyright International Electrotechnical Commission
Provided by IHS under license with IEC
No reproduction or networking permitted without license from IHS Not for Resale

For the measurement, the cable screen is disconnected at the microphone output and the test voltage inserted. The ratio of the resulting voltage at the balanced meter to the interfering source is calculated in accordance with 15.1.

16 Equivalent sound pressure level due to inherent noise

16.1 Characteristic to be specified

The external sound pressure level that would give the same weighted output voltage as is observed when there is no external field, and the output voltage is only due to the inherent noise of the microphone. The reference frequency of the external sound pressure shall be the same as for the rated free-field sensitivity.

NOTE Unless otherwise stated, it is understood that reference is made to free-field conditions and zero angle of incidence of sound.

16.2 Method of measurement

a) When measuring the inherent electric noise, the microphone shall be isolated against sound, wind, shock, vibration and electric or magnetic external fields.

NOTE An example for an efficient sound insulation device is given in Annex A.

b) The weighted output voltage due to inherent noise of the microphone is measured, using the A-weighting curve and quasi-peak meter specified in IEC 60268-1.

NOTE Professional users often require the values measured with the psophometric filter (see IEC 60268-1) and quasi-peak meter. It is therefore strongly recommended that the results of such measurements are also made available. It is further recommended that the frequency distribution of the inherent noise is included, for example as an additional curve plotted along with the response curves.

c) The equivalent sound pressure due to inherent noise is the ratio of the output e.m.f. to the rated free-field sensitivity.

d) The equivalent sound pressure level is the ratio, expressed in decibels, of the equivalent sound pressure to the reference sound pressure (20 μPa).

17 Ambient conditions

17.1 General

The following characteristics shall be specified independently of each other. In cases where interdependencies exist, conditions and effects shall be specified by the manufacturer.

17.2 Pressure range

The ambient pressure range over which the characteristics of the microphone do not vary by more than ±2 dB.

If the manufacturer claims that the microphone is suitable for applications in which a high rate of change of ambient pressure occurs (such as an air-borne sound system) then the maximum tolerable rate of change of the ambient pressure shall also be stated.

17.3 Temperature range

The temperature range over which the characteristics of the microphone do not vary by more than ±2 dB.

17.4 Relative humidity range

The relative humidity range over which the characteristics of the microphone do not vary by more than ±2 dB.

Copyright International Electrotechnical Commission
Provided by IHS under license with IEC
No reproduction or networking permitted without license from IHS Not for Resale

18 External influences

18.1 General

18.1.1 Specification and measuring methods

Microphones are subject to many forms of external interference which it may be of vital importance to exclude or limit in particular cases. As, however, external influences by reason of non-linear effects can give rise to very complicated interference, no generally valid method of measurement can be given to evaluate them.

Specifications are subject to discussion between supplier and user and can lead to possibly elaborate laboratory and/or field tests.

The methods of measurement given below (see 18.2 to 18.6) deal only with external influences from:

– magnetic fields such as those emanating from the mains supply;
– mechanical vibrations;
– wind;
– the "pop"-effect;
– electromagnetic interference.

The methods given are neither exhaustive nor final, but are intended to provide useful guidance.

18.1.2 Other external interferences

For all external interferences other than those given in this standard, specifications shall be determined by agreement between supplier and user.

18.2 Equivalent sound pressure due to external magnetic fields

18.2.1 Characteristic to be specified

For a homogeneous sinusoidal external magnetic field, specified as the r.m.s. value, frequency and direction, the equivalent sound pressure due to the external magnetic field in the absence of a sound field.

The equivalent sound pressure shall be stated for the direction of the external field for which maximum influence occurs. The directions for both maximum and minimum influence shall be stated.

The equivalent sound pressure shall be given for an external magnetic field of power supply frequency, and for each of its harmonics up to and including the fifth. Cases may arise where the principal interfering frequency is not the mains fundamental but a harmonic or complex of harmonics of this frequency. In other cases the interference may be unrelated to the mains supply and produced for example by the line frequency in video monitors. The same methods of measurement can be adapted to each special need.

The strength of the magnetic field used shall be large enough to overcome noise or other disturbances.

NOTE 1 If linear relations exist, the equivalent sound pressure may be specified as a transmission factor, relating the equivalent sound pressure and the magnetic field strength.

NOTE 2 The equivalent sound pressure is referred to the free-field sensitivity and the related frequency.

--`,,```-`-`,,`,,`,`,,`---

Copyright International Electrotechnical Commission
Provided by IHS under license with IEC
No reproduction or networking permitted without license from IHS Not for Resale

18.2.2 Method of measurement

a) The microphone is connected under measurement conditions, without the application of a sound field. An appropriate filter may be used to separate the measurement frequencies from interference. Controls, if there are any, are set to normal position.

b) An external uniform magnetic field with sinusoidal waveform and with frequency equal to the mains frequency is applied. The direction of the field shall be such that maximum output voltage of the microphone is measured. The measurement frequencies are 50 Hz or 60 Hz, 1 kHz and 16 kHz. The magnetic field strengths for the measurements shall be 1 A/m at 50 Hz and 0,1 A/m at 1 kHz and 16 kHz. The output of the microphone is measured in accordance with one of the weightings and meters specified in IEC 60268-1. The type of meter and weighting shall be specified. The results shall be referred to the free-field sensitivity, and stated as equivalent sound pressure levels for magnetic induction.

NOTE For the method of producing a uniform alternating magnetic field, see 12.1 of IEC 60268-1.

c) The measurement is repeated to obtain the response at the mains frequency harmonics up to and including the fifth.

18.3 Equivalent sound pressure due to mechanical vibration

18.3.1 Characteristic to be specified

For a mechanical vibration, specified by the r.m.s. value of the acceleration, frequency and direction, the equivalent sound pressure due to the vibration, in the absence of a sound field.

The equivalent sound pressure shall be stated for the direction of the vibration for which maximum influence occurs. The directions for both maximum and minimum influence shall be stated.

NOTE 1 The equivalent sound pressure may be stated for vibrations at specified frequencies, or within a specified frequency band having the reference frequency as the geometric mean frequency.

NOTE 2 If linear relations exist, the equivalent sound pressure may be specified as a transmission factor, relating the equivalent sound pressure and the acceleration.

18.3.2 Method of measurement

a) The microphone is connected under rated conditions, without the application of a sound field.

b) A mechanical vibration of a specified r.m.s. acceleration and of a specified frequency or a specified frequency band is applied. The direction of the vibration shall be such that maximum output voltage is obtained.

c) The r.m.s. output voltage U'_2 and the r.m.s. acceleration are measured.

d) The equivalent sound pressure is computed from U'_2 and from the rated sensitivity. The acceleration and the direction of the vibration shall be specified.

e) A test is made to obtain the direction of vibration for minimum influence. This direction is also specified.

f) The measurement is preferably made with a gliding frequency up to 250 Hz.

NOTE If linear relations exist between the equivalent sound pressure and the acceleration, the transmission factor may be specified. In cases of strong dependency on frequency, more values or the complete characteristic may be given.

Copyright International Electrotechnical Commission
Provided by IHS under license with IEC
No reproduction or networking permitted without license from IHS Not for Resale

18.4 Equivalent sound pressure due to wind

18.4.1 Characteristic to be specified

For a wind, specified by velocity and direction, the equivalent sound pressure due to the wind in the absence of a sound field. The equivalent sound pressure shall be stated for the direction of the wind for which maximum influence occurs. The directions for both maximum and minimum influence shall be stated.

NOTE Besides the weighted wide-band level, the equivalent sound pressure level may also be stated for octave or third-octave bands in the effective frequency range of the microphone and for additional wind velocities besides the reference value of 10 m/s.

18.4.2 Method of measurement

All measurements of wind noise are subject to large variations if the stream of air is turbulent at the source, or develops turbulence between source and microphone. After evaluating several methods, the wind tunnel method has proven to give the best matching to natural wind conditions. It is, however, still difficult to measure the nature of the generated wind and to describe it with enough accuracy. Therefore, at present it is better to specify the generator by mechanical characteristics.

Two different solutions have been investigated, a short device with radial fan and a long device with axial fan (see Figure 3). The first has been installed by several institutions and has proved to give reproducible results everywhere. Similar experience with the second is not yet known. Comparative measurements between the first installation and other generators showed that major differences have to be expected. Therefore the published wind sensitivity values shall also state whether machine 1 or machine 2 has been used.

A block diagram of the measurement setup is shown in Figure 2. The microphone under test is placed at a distance of 25 cm from the outlet of the tunnel. The tunnel is operated in a room not influencing the measurement results, for example an anechoic chamber. The output voltage of the microphone under wind conditions is measured by the A-weight filter in accordance with IEC 60268-1 and optionally as octave or third-octave band value. Microphones with detachable windscreens shall be measured with and without the windscreen.

NOTE 1 The two different machines to generate the air flow are shown in Figure 3. The tunnel inner surface is to be constructed to provide a homogeneous air flow. The dimensions chosen are large enough compared with those of the microphones to be tested. The higher velocity at the outlet of machine 1 is achieved by the conical construction reducing the cross-section. To achieve a laminar flow, the inside of machine 2 is covered with glass wool of 55 kg/m^3 density and 2,5 cm thickness, or similar material. At the necessary speed the fans produce negligible acoustic noise. The measuring distance of 25 cm has been chosen to get an amount of turbulence similar to the natural wind conditions.

NOTE 2 The nature of wind noise is such that pressure fluctuations, the frequencies of which lie below the effective frequency range (so that they are not directly indicated), may give rise to microphone output signals large enough to overload the first stage of the amplifier. Care should be taken to avoid such overloading effects.

The procedure is given in steps a) to c).

a) The microphone is connected under rated conditions to an amplifier in the absence of a sound field.

b) The microphone under test is submitted to a wind of specified velocity, the reference being 10 m/s, and specified direction. The microphone is orientated with respect to the wind direction so that maximum output is obtained.

c) The equivalent sound pressure level is computed from the output voltage of the microphone (wide band, weighted or additional narrow bands) and from the free-field sensitivity and is given in decibels with respect to the sound pressure level re 20 μPa. The direction of wind shall be specified and, in case of the wind speed differing from the reference value of 10 m/s, this value shall also be stated.

Copyright International Electrotechnical Commission
Provided by IHS under license with IEC
No reproduction or networking permitted without license from IHS Not for Resale

18.5 Transient equivalent sound pressure due to "pop" effect

18.5.1 Characteristic to be specified

NOTE This subclause is using “energy “ for the time integral of the squared pressure at the microphone input. For the purpose of determining values for the characteristic, this is of no importance, because the otherwise necessary introduction of area and mechanical resistance would be cancelled in the energy ratio of both formulas given in the clause.

The reaction of the microphone to a defined "pop" excitation, measured in the absence of a sound field, with a measurement installation in accordance with Figure 4 that can simulate the air flow produced by human stop consonants (P, T, etc.). The installation generates a pressure signal inside the chambers and in the vent in accordance with Figure 5, usually leading to microphone responses that can only be described by statistical values. Therefore the “energy” response W_{rm} of the microphone at a reference time t_{rm} according to arrival of the pressure wave-front is related to the “energy” value W_{r} at the reference time t_{r} in the chamber.

The equivalent sound pressure level for the "pop" reaction is then given by:

$$L_{\mathrm{pop}} = 10\log_{10}\left(W_{\mathrm{rm}}/W_{\mathrm{r}}\right) + L_{\mathrm{p}} + k$$

The constant L_{p} allows for an excitation level in accordance with Figure 5, while k corrects for different gains for the reference signal and the microphone output, as do the different sensitivities of the microphone for the reference signal and the microphone under test. If reference frequencies other than 1 000 Hz are used these shall be stated.

As a second characterization of the microphone "pop" reaction, the decay can be calculated from

$$d = W_{\mathrm{rm}}/W_{\mathrm{em}}$$

The end time t_{em} is also delayed by the same amount as t_{rm}. A very "dry" reaction equals fast decay up to a value of nearly 1, "slow" microphones lead to results of far less than 1. The choice of a suitable reference time t_{r} is not finally verified by a sufficient number of measurements. For the moment, and to get comparable results, a value of 30 ms shall be chosen.

NOTE 1 Normally the sensitivity of the microphone at 1 000 Hz is taken as the reference. As some microphones obtain good "pop" behaviours only at the expense of considerably reduced bass response, the true practical result may be found by referring to lower reference frequencies such as 150 Hz.

NOTE 2 A simplified method for the "pop" reaction has been proposed. It is described in Annex B. Interested parties are encouraged to make comparative measurements of both methods and their relationship to the audible amount of "pop" noise. Subscripts for the microphone response have the letter m added to subscripts for the reference signal. Reference time t_{r} is normally taken at zero crossing after L_{p}.

18.5.2 Method of measurement

The loudspeaker illustrated in Figure 4 shall be a woofer with a first resonant frequency of approximately 30 Hz and a diameter of approximately 250 mm. The element values given in Figure 4 may be changed to get the best approximation of the pressure signal, in accordance with Figure 5. The surface of the vents illustrated in Figure 4 shall be polished to obtain a defined air stream. The reference signal shall show negligible difference between the centre of the vent and the interior of the chamber formed by the baffle and the loudspeaker cone. It should be measured by a miniature or probe microphone with flat response for the spectrum of the signal illustrated in Figure 5.

The equivalent sound pressure shall be stated for the distance at which maximum "pop" reaction occurs. The microphone shall be operated with the sound and "pop" signal coming from the direction prescribed for practical use by the manufacturer. In cases where the output varies considerably depending on slight changes of this direction, this should be stated with the results.

Copyright International Electrotechnical Commission
Provided by IHS under license with IEC
No reproduction or networking permitted without license from IHS Not for Resale

The microphone under test is placed in front of the vent at the defined distance and the reaction to the reference signal is measured. The “energy” values for t_{rm} and t_{em} are taken and used for the calculation of the "pop" date. It is recommended not to use the average reference signal but to store every corresponding reference and also to repeat the measurement several times to get well-averaged data.

NOTE This definition and procedure is a first attempt to get comparable results. Increased use will show whether revisions are necessary.

18.6 Equivalent sound pressure due to electromagnetic interference

Microphones, especially those with electronic circuits, can be sensitive to electromagnetic fields. Besides fields from radio stations and other generators, microphone-related equipment can be the source of disturbance, such as d.c./d.c. converters for power supplies or polarizing voltages. The same characteristics and measurement methods shall be followed as for household electronic equipment or professional equipment, for instance.

18.6.1 Characteristic to be specified

The reaction of microphones to modulated electromagnetic waves over a wide range of frequencies, stated as equivalent sound pressure level due to RF emission.

18.6.2 Method of measurement

The measurement is based on IEC 61000-4-3 with the modification of modulated RF field. The microphone under test is brought into the operating position. Controls, if there are any, are set to the normal position. The RF source is modulated with 1 000 Hz 30 % A.M. in the first test run and 1 000 Hz at 22,5 kHz F.M. in the second. The field strength shall be 10 V/m. The output of the microphone under these conditions is measured as weighted noise (quasi-peak reading) and given with reference to the microphone free-field sensitivity as equivalent sound pressure level.

18.7 Electrostatic discharge

The immunity against electrostatic discharge shall be tested in accordance with IEC 61000-4-2.

19 Magnetic stray field

19.1 Characteristic to be specified

The magnetic a.c. and d.c. fields, generated by the microphone at a stated distance from its enclosure or from any part associated with the microphone. The magnetic a.c. fields can arise from any frequency in the operating range of the microphone and from any frequency of the power supply. The manufacturer shall specify the maximum value of the magnetic fields occurring at any point at the stated distance from the enclosure, together with the directions in which the different magnetic a.c. and the magnetic d.c. fields occur.

NOTE 1 The microphone should preferably be constructed in such a way that the magnetic field generated by the microphone in its surroundings is so small that no disturbance is obtained when two microphones are working side by side.

NOTE 2 The d.c. magnetic field produced by some types of microphone, especially the ribbon type, is inevitably large. This field may affect other equipment, and this fact should be noted in the instruction manual. The user should allow for this and take precautions in placement.

Copyright International Electrotechnical Commission
Provided by IHS under license with IEC
No reproduction or networking permitted without license from IHS Not for Resale

19.2 Method of measurement

a) The microphone shall be operated under rated conditions.

b) The external field is measured, separating the different frequency components. The a.c. magnetic field strength may be measured by means of a suitable probe coil as specified in IEC 60268-1, 12.2. The d.c. magnetic field strength, often the more important, can be measured by means of a suitable flux meter, such as one depending on the Hall effect.

20 Physical characteristics

20.1 Dimensions

The main dimensions of the microphone shall be specified by the manufacturer.

20.2 Weight

The net mass of the microphone shall be specified by the manufacturer.

20.3 Cables and connectors

The connector or cable connections shall be specified by the manufacturer as, for example, connector contact numbers or conductor insulation colours. Polarity information shall be included (see 6.1).

Reference is made to IEC 60268-11, IEC 60268-12 and IEC 60574-3.

21 Classification of the characteristics to be specified

21.1 General

It is essential that markings bearing on safety appear on the label and are clearly visible. Other markings are recommended but these may not in some cases be practicable, either for reasons of size or construction, or because variable facilities are provided which make the marking confusing. Accordingly, such markings are indicated by the letter R.

For stereo or multi channel microphones the data shall be given for each channel.

Copyright International Electrotechnical Commission
Provided by IHS under license with IEC
No reproduction or networking permitted without license from IHS Not for Resale

21.2 Classification

Table 3 – Classification of characteristics

Clause	Subclause	A[a]	B[b]
5	Type description		
	5.1 Principle of the transducer		X
	5.2 Type of microphone		X
	5.3 Type of directional response characteristics		X
6	Terminals and controls		
	6.1 Marking	R	X
	6.2 Connectors and electrical interface values		X
7	Reference point and axis		
	7.1 Reference point	R	X
	7.2 Reference axis	R	X
8	Rated power supply		
	– type of power supply	X	X
	– power supply voltage	X	X
	– upper and lower limits		X
	– current drawn from power supply		X
9	Electrical impedance		
	9.1 Internal impedance		R
	9.2 Rated impedance		X
	9.3 Minimum permitted load impedance	R	X
10	Sensitivity		
	10.2 Sensitivities with respect to acoustical environment		
	10.2.1 Free-field sensitivity		X
	10.2.2 Diffuse-field sensitivity		R
	10.2.3 Close-talking sensitivity		R
	10.2.4 Pressure sensitivity		R
	10.3 Sensitivities with respect to nature of signal		
	10.3.1 Rated sensitivity		X
	10.3.2 Characteristic sensitivity for speech		R
11	Response		
	11.1 Frequency response		X
	11.2 Effective frequency range		X
12	Directional characteristics		
	12.1 Directional pattern	R	X
	12.2 Directivity index		R
	12.3 Front-to-rear sensitivity index (0° – 180°)		R
	12.4 Noise cancelling index		R
13	Amplitude non-linearity (all characteristics)		R
14	Limiting characteristics		
	14.1 Maximum permissible peak sound pressure		R
	14.2 Overload sound pressure		X
15	Balance		X
	15.1 Balance of the microphone output		
16	Equivalent sound pressure level due to inherent noise		X
17	Ambient conditions		
	17.1 General		R
	17.2 Pressure range		R
	17.3 Temperature range		R
	17.4 Relative humidity range		
18	External influences		
	18.1 General		R
	18.2 Equivalent sound pressure due to external magnetic fields		R
	18.3 Equivalent sound pressure due to mechanical vibration		R
	18.4 Equivalent sound pressure due to wind		R
	18.5 Transient equivalent sound pressure due to "pop" effect		R
	18.6 Equivalent sound pressure due to electromagnetic interference		R
	18.7 Electrostatic discharge		R
19	Magnetic stray field		R
20	Physical characteristics		
	20.1 Dimensions		X
	20.2 Weight		X
	20.3 Cables and connectors		X

NOTE IEC 61938, 7.1 to 7.6 specify matching and marking of microphones and power supplies with preferred values.

[a] A is the data which shall be marked by the manufacturer on the microphone.

[b] B is the data which shall be specified by the manufacturer in the manual and technical specification.

--`,,`,,`-`-`,,`,,`,`,,`---
Copyright International Electrotechnical Commission
Provided by IHS under license with IEC
No reproduction or networking permitted without license from IHS Not for Resale

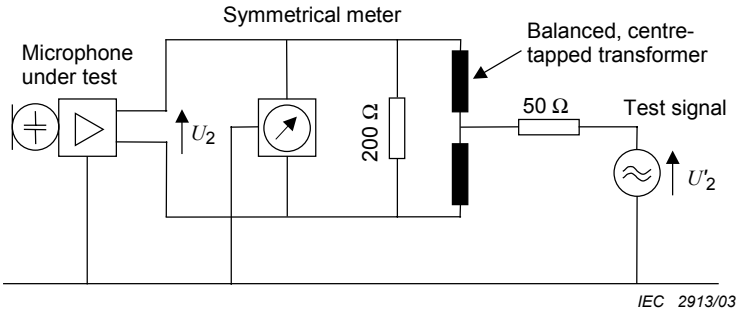

Figure 1a – Balance of the output

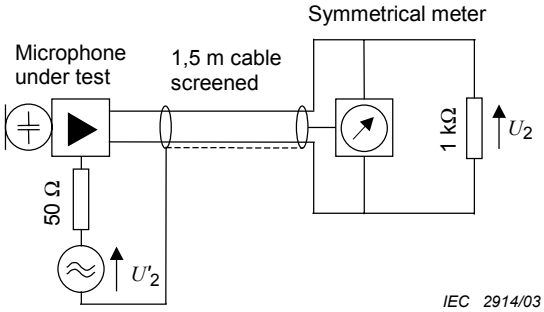

Figure 1b – Balance under working conditions

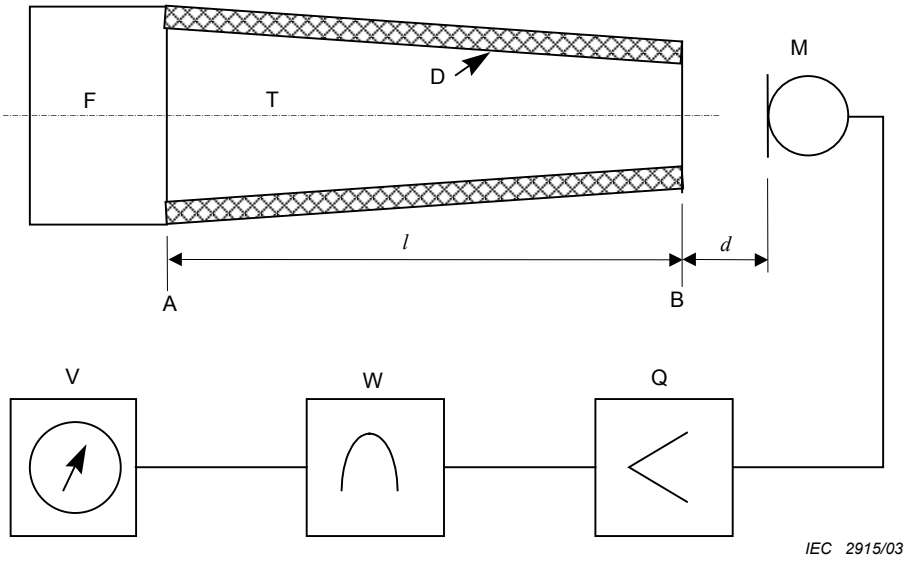

Key

F fan with low acoustic noise
A inlet cross-section of wind tunnel
T wind tunnel
D damping material
B outlet cross-section of wind tunnel
l length of tunnel
d measuring distance between microphone and tunnel outlet
M microphone under test
Q amplifier
W weighting filter / band filter (optional)
V voltmeter

Figure 2 – Measurement set-up for wind influence

Copyright International Electrotechnical Commission
Provided by IHS under license with IEC
No reproduction or networking permitted without license from IHS Not for Resale

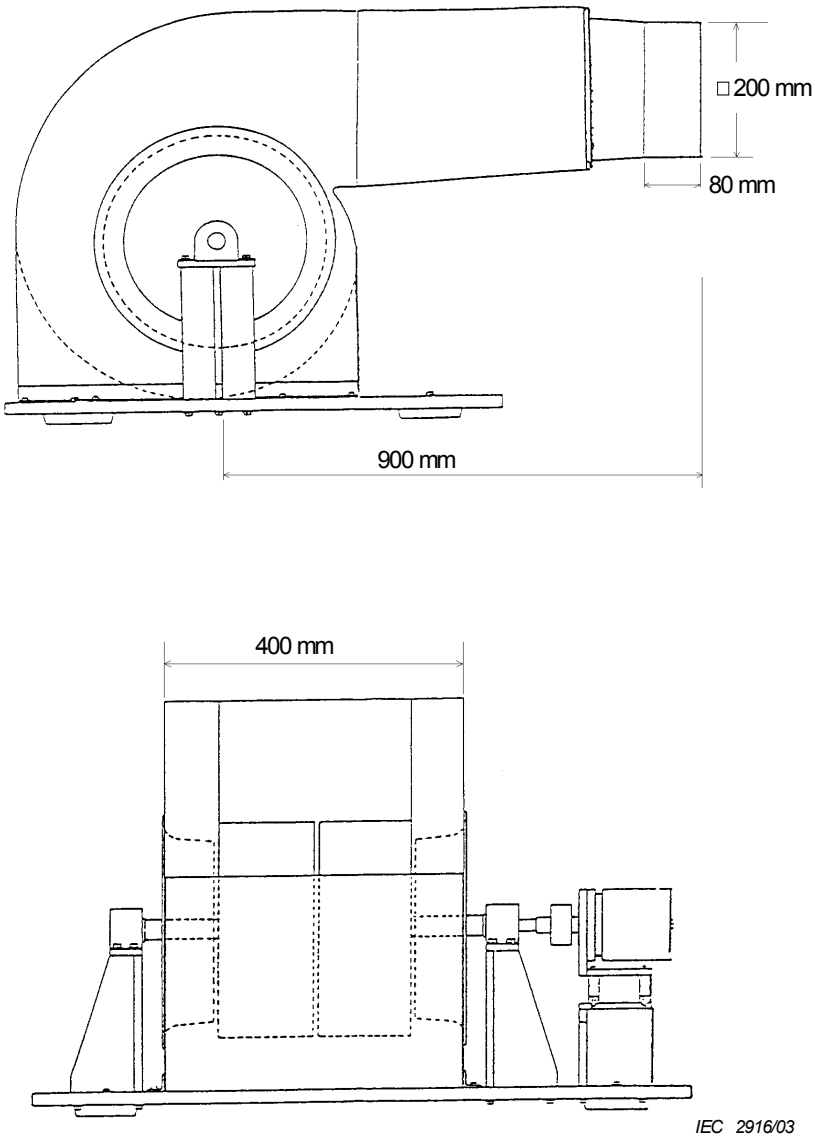

Figure 3a – Wind generator with radial fan (front and side view)

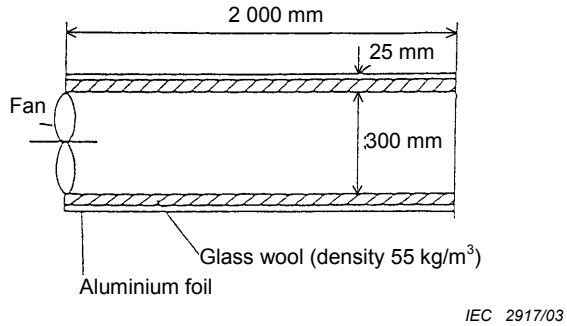

Figure 3b – Wind generator with axial fan

Figure 3 – Wind generators, type 1 (above) and type 2 (below)

Copyright International Electrotechnical Commission
Provided by IHS under license with IEC
No reproduction or networking permitted without license from IHS Not for Resale

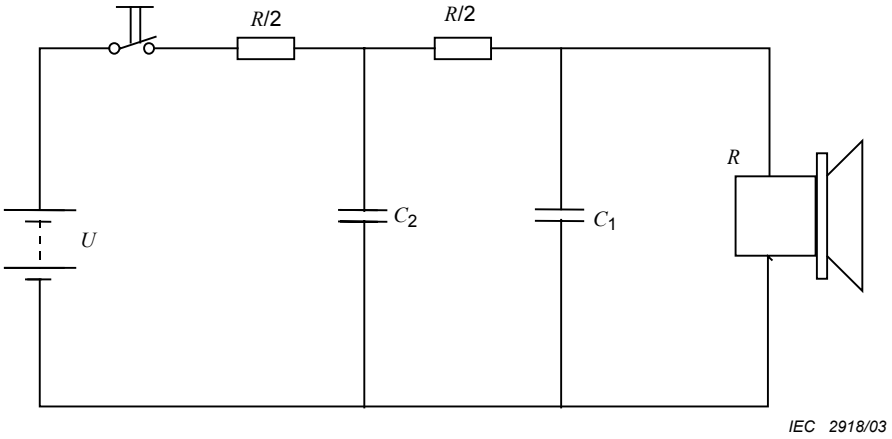

$R_i \ll R$ where R_i is the internal impedance of the power supply
$R \cdot C_1$ = 20 ms
$C_2 = C_1/2$

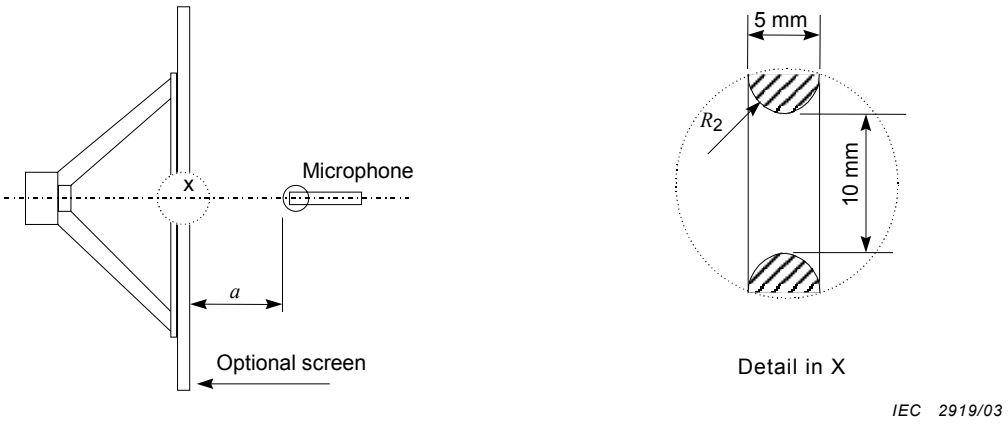

Figure 4 – Electrical and mechanical set-up for the measuring of the "pop" effect

Copyright International Electrotechnical Commission
Provided by IHS under license with IEC
No reproduction or networking permitted without license from IHS Not for Resale

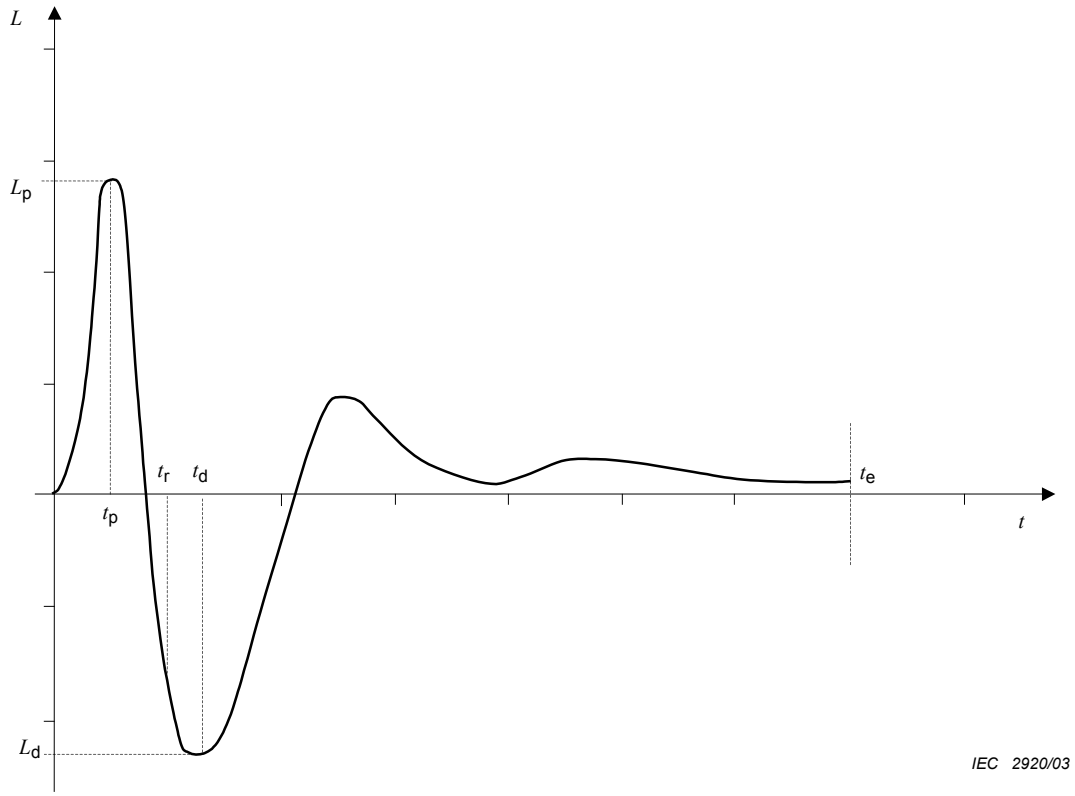

Quantity	Value	Unit
L_p	20 ± 3 dB	re:Pa
L_d	16 ± 3 dB	re:Pa
t_p	≈ 10	ms
t_r	See 18.5	ms
t_d	30	ms
t_e	160	ms
W_r	≈ 5	Pa^2s
W_e	< 7,5	Pa^2s

Figure 5 – Reference signal and characteristics

--`,,`-`-`,,`,,`,`,,`---

Copyright International Electrotechnical Commission
Provided by IHS under license with IEC
No reproduction or networking permitted without license from IHS Not for Resale

Annex A
(normative)

Sound insulation device

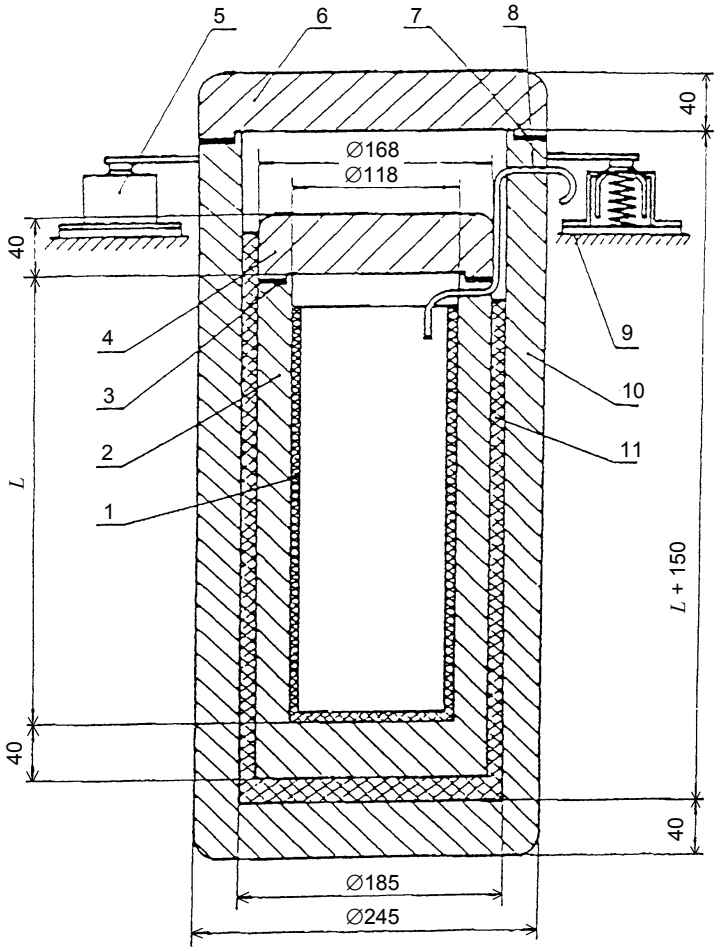

Dimensions in millimetres

According to the requirements, define L as desired.

Key

1 sound absorbent lining
2 inside can
3 rubber spacer inside can
4 cover of inside can
5 vibration damper (four pieces)
6 cover of outside can
7 rubber spacer outside
8 measuring cable
9 base plate
10 outside can
11 damping material

NOTE At the base, the damper is in axial symmetry and uniformly distributed. The resonance frequency of the system, constituted by the total stiffness of the vibration damper and the total mass of the can should be less than 10 Hz. The sound insulation device is made of normal carbon steel. It has double encapsulation. It is filled with damping materials between two layers of cans. The outlet for the measuring cable shall be sealed.

Figure A.1 – Sound insulation device

Copyright International Electrotechnical Commission
Provided by IHS under license with IEC
No reproduction or networking permitted without license from IHS Not for Resale

Annex B
(informative)

Simplified procedure for “pop” measurements

B.1 General

The procedure is meant to supply reproducible and comparable measurement results for the "pop" effect of microphones. It provides a ranking of microphones according to "pop" noise and especially allows the definition of the "pop" attenuation of "pop" screens or other means applied to the microphone. It is simpler than the procedure specified in 18.5.

B.2 Measurement set-up (see Figure B.1)

A woofer is covered with a 5 mm thick metal baffle to enclose a volume between diaphragm and baffle. In the middle of the baffle, nine holes are arranged in a square pattern, each having a diameter of 4,4 mm and a distance to the neighbour of 10 mm. The holes should have no sharp edges, for example a 45° polished chamfer.

The microphone under test is situated 10 cm from the holes on axis. At least 30 mm beside these holes, a calibration microphone M_C is tightly fixed into an extra hole of the plate to pick up the inside pressure signal.

The loudspeaker input is a sinusoidal signal of 5 Hz.

B.3 Measurement procedure

The 5 Hz signal is supplied to the loudspeaker via an amplifier with adjustable gain. It is adjusted to a peak sound pressure level of 140 dB in the chamber between the baffle and the diaphragm of the loudspeaker.

A measuring microphone of 12,7 mm diameter is positioned at 100 mm distance from the baffle and on the axis of the loudspeaker. The mounting equipment shall have negligible influence on the sound field and air flow. With an adequate filter, frequencies below 5 Hz are cut off. The output is then measured as r.m.s. value using an A-weighting filter to give sound pressure level reference values $L_{A,r}$ for wide band and $L_{T,r}$ for third-octave characteristics.

With 50 mm displacement of the microphone from the axis, the measurement is repeated to give the threshold limits $L_{A,t}$ and $L_{T,t}$ for the procedure.

NOTE The threshold values depend on the smoothness of the holes in the baffle. Careful polishing shifts the values to lower sound pressure levels.

By relating the measured output voltages to the sensitivity of the microphone, the output voltages may be expressed as equivalent sound pressure levels, reference 20 μPa.

The differences

$$\delta L_{A,pop} = L_{A,t} - L_{A,r}$$

$$\delta L_{T,pop} = L_{T,t} - L_{T,r}$$

--`,,```-`-`,,`,,`,`,,`---

Copyright International Electrotechnical Commission
Provided by IHS under license with IEC
No reproduction or networking permitted without license from IHS Not for Resale

characterize the "pop" sensitivity of the microphone under test as long as they are at least 10 dB higher (with reduced accuracy, 6 dB) than the limits $L_{A,t}$ and $L_{T,t}$.

The results give no indication of possible influences on the "pop" effect of different acoustical transfer functions at very low frequency. A possible way of excluding this influence is discussed in 18.5.

B.4 Approximate inclusion of different frequency responses

If the microphone under test shows extreme differences from a flat response a low bass response would lead to a low value from the "pop" measurement device. This may be subjectively right but might be at the expense of unacceptable coloration. The following approximation gives a way of excluding the influence of the frequency response on the "pop" results.

The differences $K_f = L_{f,m} - L_{f,r}$ at each of these frequencies give correction factors to be added to the originally measured "pop" values for new values $L_{T,m}$ new = $L_{T,m} + K_f$. If these values are reduced by the differences A_f from the A-weighting curve, the A-weighted sound pressure level can be calculated from the third octave values by the formula:

$$\delta L_{A,pop}\,\text{new} = 10\log_{10}\left(\sum 10^{\left(L_{T,m}+K_f-A_f\right)/10}\right)$$

The values of A_f can be found in IEC 61672-1.

Using the apparatus shown in Figure B.2, the frequency responses of a 1/2" measuring microphone ($L_{f,m}$) and of the microphone under test ($L_{f,r}$) are measured for each third-octave mid-band frequency from 50 Hz to 250 Hz.

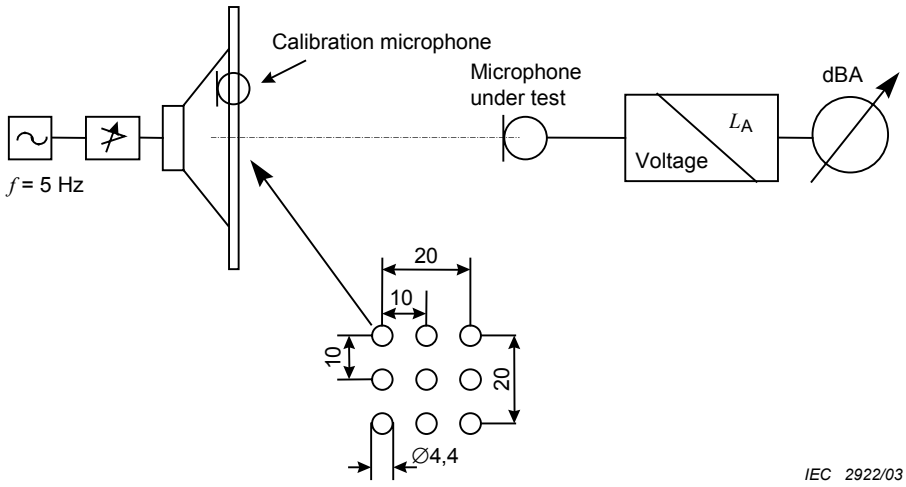

Dimensions in millimetres

Figure B.1 – Measurement set-up

Copyright International Electrotechnical Commission
Provided by IHS under license with IEC
No reproduction or networking permitted without license from IHS Not for Resale

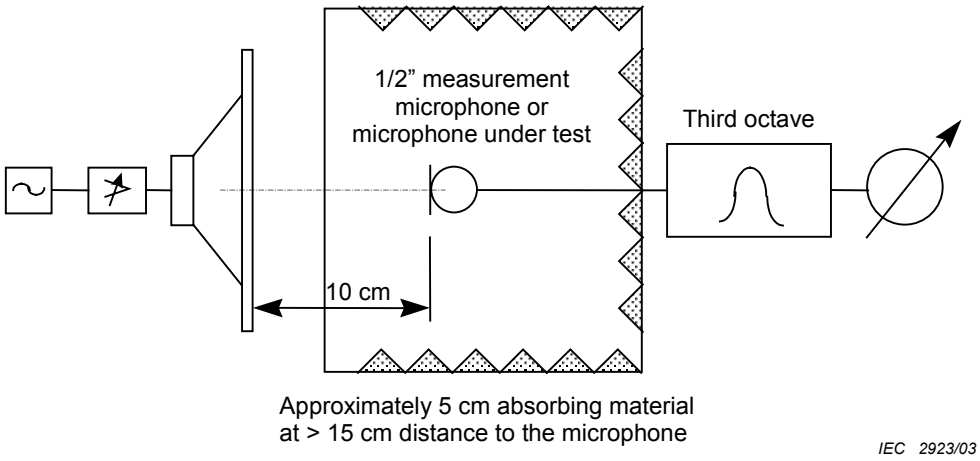

Figure B.2 – Test fixture for the sound field sensitivity

Copyright International Electrotechnical Commission
Provided by IHS under license with IEC
No reproduction or networking permitted without license from IHS Not for Resale

Bibliography

IEC 60574-1:1977, *Audiovisual, video and television equipment and systems – Part 1: General*

IEC 60574-2:1992, *Audiovisual, video and television equipment and systems – Part 2: Definitions of general terms*

IEC 60581-1:1977, *High fidelity audio equipment and systems; Minimum performance requirements Part 1: General*

IEC 61672-1:2002, *Electroacoustics – Sound level meters – Part 1: Specifications*

ITU-T Recommendation P.51:1996, *Artificial mouth*

BBC Engineering Monograph No. 7, BBC Research Department, Kingswood Warren, Tadworth, Surrey, England KT20 6NP.

_____

Copyright International Electrotechnical Commission
Provided by IHS under license with IEC
No reproduction or networking permitted without license from IHS Not for Resale

Copyright International Electrotechnical Commission
Provided by IHS under license with IEC
No reproduction or networking permitted without license from IHS Not for Resale

Standards Survey

The IEC would like to offer you the best quality standards possible. To make sure that we continue to meet your needs, your feedback is essential. Would you please take a minute to answer the questions overleaf and fax them to us at +41 22 919 03 00 or mail them to the address below. Thank you!

Customer Service Centre (CSC)

International Electrotechnical Commission
3, rue de Varembé
1211 Genève 20
Switzerland

or

Fax to: **IEC**/CSC at +41 22 919 03 00

Thank you for your contribution to the standards-making process.

Nicht frankieren
Ne pas affranchir

Non affrancare
No stamp required

A Prioritaire

RÉPONSE PAYÉE

SUISSE

Customer Service Centre (CSC)
International Electrotechnical Commission
3, rue de Varembé
1211 GENEVA 20
Switzerland

Copyright International Electrotechnical Commission
Provided by IHS under license with IEC
No reproduction or networking permitted without license from IHS
Not for Resale

Q1 Please report on **ONE STANDARD** and **ONE STANDARD ONLY**. Enter the exact number of the standard: *(e.g. 60601-1-1)*

.....

Q2 Please tell us in what capacity(ies) you bought the standard *(tick all that apply).* I am the/a:

purchasing agent ❑
librarian ❑
researcher ❑
design engineer ❑
safety engineer ❑
testing engineer ❑
marketing specialist ❑
other.....

Q3 I work for/in/as a: *(tick all that apply)*

manufacturing ❑
consultant ❑
government ❑
test/certification facility ❑
public utility ❑
education ❑
military ❑
other.....

Q4 This standard will be used for: *(tick all that apply)*

general reference ❑
product research ❑
product design/development ❑
specifications ❑
tenders ❑
quality assessment ❑
certification ❑
technical documentation ❑
thesis ❑
manufacturing ❑
other.....

Q5 This standard meets my needs: *(tick one)*

not at all ❑
nearly ❑
fairly well ❑
exactly ❑

Q6 If you ticked NOT AT ALL in Question 5 the reason is: *(tick all that apply)*

standard is out of date ❑
standard is incomplete ❑
standard is too academic ❑
standard is too superficial ❑
title is misleading ❑
I made the wrong choice ❑
other .....

Q7 Please assess the standard in the following categories, using the numbers:
(1) unacceptable,
(2) below average,
(3) average,
(4) above average,
(5) exceptional,
(6) not applicable

timeliness.....
quality of writing.....
technical contents.....
logic of arrangement of contents .....
tables, charts, graphs, figures.....
other .....

Q8 I read/use the: *(tick one)*

French text only ❑
English text only ❑
both English and French texts ❑

Q9 Please share any comment on any aspect of the IEC that you would like us to know:

.....
.....
.....
.....
.....
.....
.....
.....
.....
.....
.....
.....

Copyright International Electrotechnical Commission
Provided by IHS under license with IEC
No reproduction or networking permitted without license from IHS
Not for Resale

Copyright International Electrotechnical Commission
Provided by IHS under license with IEC
No reproduction or networking permitted without license from IHS Not for Resale

ISBN 2-8318-7367-3



ICS 33.160.50

Typeset and printed by the IEC Central Office
GENEVA, SWITZERLAND

Copyright International Electrotechnical Commission
Provided by IHS under license with IEC
No reproduction or networking permitted without license from IHS

Not for Resale